CITY OF REDLANDS

CITY COUNCIL

A G E N D A

MARCH 3, 2026

MARIO SAUCEDO
Mayor

MARC SHAW
Mayor Pro Tempore

PAUL BARICH
Council Member

EDDIE TEJEDA
Council Member

DENISE DAVIS
Council Member

***

JEANNE DONALDSON
City Clerk

PHILLIP DOOLITTLE
City Treasurer

CHARLES M. DUGGAN JR.
City Manager

YVETTE M. ABICH GARCIA
City Attorney

5:00 p.m. Open Public Meeting, Public Comment (Closed Session)
6:00 p.m. Open Session (Public Meeting)

* * *

City Council Chambers
Civic Center, 35 Cajon Street, Redlands, California

Recycled Paper

A G E N D A

The following information comprises the agenda for the regular meeting of the City Council of the City of Redlands at the times noted below in the City Council Chambers, Civic Center, 35 Cajon Street, Redlands, California, on:

TUESDAY, MARCH 3, 2026

To join via Zoom on a computer, laptop, or smart device
Please visit www.zoom.us, click on Join a Meeting
Enter the **Meeting ID 896 2789 8341,** then run the Zoom launcher
To join via Zoom with audio only (cell phone or landline):
Dial **1-877-853-5247**
Enter the **Meeting ID 896 2789 8341**

Should the City lose connectivity on Zoom, we will halt the meeting until it can be restored. To check on the status of remote connectivity in the event of an outage, go to the City's website at www.cityofredlands.org or to the City's Facebook page at @CityofRedlands or the Instagram page at @CityofRedlands_CityHall.

In the event the City cannot reestablish Zoom connectivity in a reasonable amount of time, the mayor will adjourn the meeting to a future date.

***PLEASE NOTE**:* Anyone desiring to speak on an agendized item at this meeting may do so during the consideration of that item. Due to time constraints and the number of persons who may wish to give oral testimony, public comments will be limited to three (3) minutes.

- **To provide comment while participating from Council Chambers:**
  - Although it is not required, speakers are encouraged to submit a "Speaker Sign Up Sheet" before the meeting is convened. Forms are available in the Office of the City Clerk or in Council Chambers.
  - After the meeting has convened, you may place the speaker form in the basket at the table along the north wall of the Chambers. Please do not disturb the City Clerk while the meeting is in progress.

- **To provide comment through Zoom (on a computer, laptop, or smart device)**:
  - Click the "Raise Hand" button and the moderator will unmute you when it is your turn to speak

- **To provide comment via audio only (cell phone or landline)**:
  - Dial *9 to "Raise Hand". The moderator will identify you by your area code and last 3 numbers of your telephone number when it is your turn to speak.



PLEASE SILENCE CELL PHONES, PAGERS AND OTHER ELECTRONIC COMMUNICATION DEVICES UPON ENTERING THE CHAMBERS

5:00 P.M.

A. **Call City Council Meeting to Order.**

B. **Public Comment**
(Any person wishing to provide public comment on a closed session matter may do so at this time.)

Recycled Paper

C. **Recess City Council Meeting to a Closed Session**

1. Conference with legal counsel: Existing Litigation - Government Code §54956.9(d)(1)
(City Attorney Garcia)
One Case:

    1. Coyote Aviation v. City of Redlands, et al. San Bernardino County Superior Court Case No. CIVSB2418252

2. Conference with Legal Counsel: Initiation of Litigation - Government Code §54956.9(d)(4)
(City Attorney Garcia)
Two (2) Cases

6:00

D. **Reconvene City Council Meeting**

E. ***Invocation by Mayor Saucedo***
Pledge of Allegiance by Highland Grove Elementary School
(In keeping with long-standing traditions of legislative invocations, this City Council meeting may include a brief invocation. Such invocations are not intended to proselytize or advance any one, or to disparage any other, faith or belief. Neither the City nor the City Council endorses any particular religious belief or form of invocation.)

F. **Closed Session Report**
(No reportable action taken in closed session unless otherwise announced by the City Attorney at this time.)

G. **Presentations**

1. Redlands Pet Adoption (Redlands Animal Services)

2. Presentation of the Women's History Month Proclamation, presented to Gayle Howard (Mayor Saucedo)

3. Presentation of the Developmental Disabilities Awareness Month proclamation, presented to Nathan and Lisa McCool (Mayor Saucedo)

H. **Public Comment - City Council**
(At this time, the City Council will provide an opportunity for the public to address them on any subject, within the jurisdiction of the City Council, which is not already scheduled on this agenda. However, any matter that requires action will be referred to staff for a report and possible action at a subsequent meeting. Comments will be limited to three {3} minutes.)

I. **Consent Calendar**
(The following routine items have been recommended for approval and will be acted upon simultaneously unless separate discussion and/or action is requested by a Councilmember or a member of the audience.)

1. Approve minutes of the regular meeting of February 17, 2026 (City Clerk Donaldson)

2. Authorize issuance of a proclamation declaring the month of March 2026 as Women's History Month (Mayor Saucedo)

Recycled Paper

3. Authorize issuance of a proclamation declaring the month of March 2026 as Developmental Disabilities Awareness Month (Mayor Saucedo)

4. Adopt Resolution No. 8754 Designating Local Agency Officials Required to Complete Fiscal and Financial Training Pursuant to Senate Bill 827 (Government Code Section 53238, et seq.) (Assistant City Manager McConnell)

5. Adopt Resolution No. 8755 Designating Local Agency Officials Required to Complete Ethics Training Pursuant to Assembly Bill 1234 as Expanded by Senate Bill 827 (Assistant City Manager McConnell)

6. Authorize acceptance of the 2023 Homeland Security Grant Program funding award in the amount of $14,501 for the purchase of portable radios and authorize an additional appropriation for the same amount. (Fire Chief Sessler)

7. Adopt Resolution No. 8753 Delegating Investment Authority to the City Treasurer Pursuant to Government Code Section 53607 (Management Services/Finance Director Garcia)

8. Approve the First Amendment to an Agreement with Systems & Software, Inc. to clarify that the Software License is Perpetual (Management Services/Finance Director Garcia)

9. Adopt Ordinance No. 3000 Amending Chapter 10.56 of the Redlands Municipal Code relating to Bicycles to establish regulations governing the use of Electric Bicycles (Police Chief Tolber)

10. Accept the donation of a 2026 Toyota Highlander, valued at the amount of $50,675.00, from the Redlands Police Community Foundation for Police Department Citizen Volunteers (Police Chief Tolber)

11. Approve the sole source purchase order with West Coast Lights & Sirens to purchase Getac mounts in the amount of $59,558.98 (Police Chief Tolber)

12. Approve a request in the amount of $2,565.00 for the temporary street closure related to the Art-On-State-Street event hosted on Sunday, March 15, 2026, by the Redlands Art Association, and determine that the event is categorically exempt from environmental review pursuant to Section 15311(c) of the state's guidelines implementing the California Environmental Quality Act (Facilities and Community Services Director Crocker)

13. Approve the use of city resources and the request for in-kind support in the amount of $130,607.96 for the Redlands Bicycle Classic event hosted by Redlands Bicycle Classic, Inc., on April 9th through 12th, 2026; approve temporary street closures related to the event; authorize the sale and consumption of alcoholic beverages at the event, and determine that the event is categorically exempt from environmental review pursuant to Section 15311(c) of the State's guidelines implementing the California Environmental Quality Act (Facilities and Community Services Director Crocker)

14. Approve a License Agreement with Fortino Vizcaino, dba 4Tinos, to operate a food truck at the City's Corporate Yard and determine that approval of the agreement is exempt from environmental review pursuant to Section 15301 of the State's guidelines implementing the California Environmental Quality Act (Facilities and Community Services Department Director Crocker)

Recycled Paper

15. Approve the Sole Source Purchase Order with Meridian Rapid Defense Group LLC., for the purchase of mobile crash barriers for an amount not-to-exceed $71,343.34 and determine that approval of the purchase is exempt from environmental review pursuant to Section 15061(b)(3) of the State's guidelines implementing the California Environmental Quality Act (Facilities and Community Services Department Director Crocker)

16. Approve the First Amendment to the Agreement with Willdan Engineering, increasing the total amount from $75,000 to $180,000 for the Professional Services Agreement to provide code enforcement services (Facilities and Community Services Director Crocker)

J. **New Business**

1. Consideration of Resolution No. 8760 Approving the Measure I Continuation Expenditure Plan Developed by the San Bernardino County Transportation Authority (City Manager Duggan)

2. Consideration of a Public Works Construction Contract with CSI Services for the Water Facilities Generators Project in an amount not-to-exceed $3,477,000, and determination that the Project is categorically exempt from environmental review pursuant to Section 15303 of the State's Guidelines for Implementing the California Environmental Quality Act (Interim Municipal Utilities and Engineering Director Casey)

3. Consideration of a Purchase and Sale Agreement with Sartin Properties, LLC., for the sale of Assessor Parcel Number 0168-343-01-0000 in the amount of $250,000, and determine that approval of the agreement is exempt from environmental review pursuant to Section 15061(b)(3) of the State’s guidelines implementing the California Environmental Quality Act (Assistant City Manager Boatman)

K. **Individual Council Member Announcements and/or Reports on Activities**
(No collective discussion or action.)

1. Individual Council Member Report on Activities for February 2026 from Mayor Pro Tem Shaw (City Clerk Donaldson)

L. **Adjournment**
The next regular meeting of the City Council will be held on March 17, 2026.

Recycled Paper

If you challenge any proposed development entitlement listed on this agenda in court, you may be limited to raising only those issues you or someone else raised at the public hearing described in this notice, or in written correspondence delivered to the City Council at or prior to this public hearing.

In compliance with the Americans with Disabilities Act, if you need special assistance to participate in this meeting, please contact Goutam Dobey, of the Municipal Utilities and Engineering Department at (909) 798-7584 ext 2. Notification 48 hours prior to the meeting will enable the City to make reasonable arrangements to ensure accessibility to this meeting.

(28 CFR 35.102-35.104 ADA Title II)

Any writings or documents distributed to a majority of the City Council regarding an open session agenda item less than 72 hours before this meeting are available for public inspection at the City Clerk's Office or at the dais of the City Clerk once the open session begins.

Staff reports or other written documentation relating to items referred to on the agenda are available at the A. K. Smiley Public Library, 125 West Vine Street, Redlands, California, and on the City's website referenced below.

Regular meetings are televised live on Redlands TV Channel 3 (Spectrum) and Channel 35 (Frontier) and re-broadcast at 7:00 P.M. the following Wednesday, Friday and Sunday; and at 9:00 A.M. Thursday, Saturday and Monday. Meetings are also streamed live and archived for later viewing on demand on the City's website at www.cityofredlands.org. Agendas, staff reports and minutes of the City Council of the City of Redlands are available online at: www.cityofredlands.org.

Recycled Paper

City Council Meeting **I. 1.**

DATE: 03/03/2026

TO: Honorable Mayor and City Council Members

SUBJECT: Approve minutes of the regular meeting of February 17, 2026 (City Clerk Donaldson)

MOTION:

I move to approve the regular meeting minutes of February 17, 2026.

Attachments

Regular Meeting Minutes of February 17, 2026

MINUTES

Regular meeting of the City Council of the City of Redlands held in the Council Chambers, Civic Center, 35 Cajon Street, on February 17, 2026 at 5:00 P.M.

Present: Mario Saucedo, Mayor
Marc Shaw, Mayor Pro Tem
Paul Barich, Council Member
Eddie Tejeda, Council Member
Denise Davis, Council Member

Staff: Charles M. Duggan, Jr., City Manager; Yvette M. Abich Garcia, City Attorney; Jeanne Donaldson, City Clerk; Phillip Doolittle, City Treasurer; Janice McConnell, Assistant City Manager; Chris Boatman, Assistant City Manager/Development Services Interim Director; Carl Baker, Public Information Officer; Danielle Garcia, Management Services/Finance Director; Rich Sessler, Fire Chief; Rachel Tolber, Police Chief; Robert Meteau, HR/Risk Management Director; Ray Casey, Municipal Utilities and Engineering Interim Director

Mayor Saucedo called the meeting to order and announced there were no closed session matters scheduled for the City Council to consider. The meeting recessed at 5:00 P.M.

RECONVENE CITY COUNCIL MEETING

The meeting reconvened at 6:00 P.M. with an invocation by Council Member Tejeda followed by the pledge of allegiance to the American flag.

PUBLIC COMMENT

Mayor Saucedo explained that comments could be presented in-person, via Zoom, via cell phone or landline.

New Businesses Supporting Youth - Ryan Rainbolt, Bill Tynan, Matisse Rainbolt and Isabella Rainbolt introduced their three separate, yet aligned, companies, all focused on a single goal: fostering community growth and supporting young people. They declared the shared mission was to help our youth discover what they're capable of through hands-on learning labs. The companies include, Enchanted Education, a STEAM Education and Career Exploration company, Step By Step Cultural Arts, and Rhino and Crow Arts Education. Additionally, they were grateful to the Redlands Police Department for their humane approach when interacting with the homeless population near the businesses on Orange Tree Lane, and they requested the police continue to monitor the encampment.

Various Concerns - Joshua Hall was concerned that the perpetrator in the recent shooting in Rhode Island was transgender, and he condemned the anti-ICE protests, viewing them as a display of contempt for the country.

BMX Pump Track - Nick Johnson was delighted to learn the City was working towards adding a BMX pump track near the Redlands Skatepark. He suggested it would provide significant community value and create a positive impact for people of all ages. He willingly offered his services to help raise funds

and promote the project.

RUSD Board Meetings - Peter Hall described the divisive nature of the recent RUSD board meetings, noting that he thought the conduct of members from Together for Redlands has increased polarization. He cited that his brother was removed from the last meeting because he raised issues surrounding the Epstein files.

Reduce Plastic Use - Roop Guyal combined poetry and music, stressing the urgent need to reduce and ultimately eliminate the use of plastic.

CONSENT CALENDAR

Minutes

On motion of Council Member Eddie Tejeda, seconded by Mayor Pro Tem Marc Shaw, the City Council unanimously approved, by roll call vote, the regular meeting minutes of February 3, 2026.

Vote: 5 - 0 Passed

Human Relations Commission Appointments

On motion of Council Member Eddie Tejeda, seconded by Mayor Pro Tem Marc Shaw, the City Council unanimously appointed, by roll call vote, Germaine Miles to serve a four-year term on the Human Relations Commission ending February 17, 2030; and appointed Daniela Ramirez-Ponce to serve a one-year term, as a College Student Commissioner, on the Human Relations Commission ending December 31, 2026.

Vote: 5 - 0 Passed

Adopt Ordinance No. 2999 Keeping of Hens

On motion of Council Member Eddie Tejeda, seconded by Mayor Pro Tem Marc Shaw, the City Council unanimously adopted, by roll call vote, Ordinance No. 2999 Amending Title 6 (Animals) and Title 18 (Zoning Regulations), updating the lists of permitted and accessory land uses, and updating development standards pertaining to the raising or keeping of hens within single-family residential zoning districts.

Vote: 5 - 0 Passed

Resolution No. 8750 State-Mandated Fire & Life Safety Inspections Compliance

On motion of Council Member Eddie Tejeda, seconded by Mayor Pro Tem Marc Shaw, the City Council unanimously approved, by roll call vote, Resolution No. 8750 accepting the report for Completed State-Mandated Fire and Life Safety Inspections by the City of Redlands Fire Department in compliance with SB 1205 and California Health and Safety Code Section 13146.4.

Vote: 5 - 0 Passed

Resolution No. 8751 Declaring Weeds to be a Public Nuisance

Fire Chief Sessler explained that Resolution No. 8751 establishes a weed abatement procedure as outlined in Government Code Section 39501. This Code Section authorizes the City's legislative body to compel the owner, lessee, or occupant of buildings, grounds or lots within the city, to remove dirt, rubbish, weeds, and rank growths from buildings, or grounds and adjacent sidewalks. Resolution No. 8751 also requires the City Council to declare weeds to be a public nuisance on known properties, offers notice to property owners, and establishes an opportunity for property owners or occupants to be heard as to why said weeds should not be abated. The public hearing is scheduled for March 17, 2026. As public comment, John Malcolm was hopeful that goat-head weeds would be included in any abatement, and he voiced his support of the action.

On motion of Mayor Pro Tem Marc Shaw, seconded by Council Member Eddie Tejeda, the City Council unanimously adopted, by roll call vote, Resolution No. 8751 declaring weeds to be a public nuisance and setting March 17, 2026, as the Public Hearing for objections to the proposed weed abatement.

Vote: 5 - 0 Passed

Collection Services Agreement

On motion of Council Member Eddie Tejeda, seconded by Mayor Pro Tem Marc Shaw, the City Council unanimously approved, by roll call vote, the agreement for delinquent billing collection services with Cedar Business Services, LLC, related to miscellaneous accounts receivable and delinquent utility billing accounts at least 120 days old after the date of service.

Vote: 5 - 0 Passed

Artlands Creative MOU for Property Enhancements

On motion of Council Member Eddie Tejeda, seconded by Mayor Pro Tem Marc Shaw, the City Council unanimously determined, by roll call vote, that approval of the Memorandum of Understanding (MOU) with Artlands Creative is exempt from California Environmental Quality Act guidelines pursuant to Section 15061; and approved the MOU with Artlands Creative for the implementation of enhancements within a portion of the parcel described as APN 0170-083-03-0000.

Vote: 5 - 0 Passed

Downtown Redlands Artwalk In-Kind Request

Assistant City Manager Boatman introduced the request for in-kind support in the amount of $11,316.50 related to the Downtown Redlands Artwalk event on Sunday, March 29, 2026, hosted by the Kids Cures Foundation. He mentioned this has been an ongoing annual event held over the last several years. As public comment, Dennis Bell declared the in-kind request to be excessive, and it represented a huge increase over last year. He questioned the redaction of the applicant’s tax ID numbers and emails, and he requested the City provide a financial summary of in-kind requests, consistent with past practices.

On motion of Council Member Eddie Tejeda, seconded by Council Member Paul Barich, the City Council unanimously determined, by roll call vote, that approval of the event is exempt from environmental review pursuant to Section 15311(c) of the State's guidelines implementing the California Environmental Quality Act; authorized and approved the expenditure of city resources and in-kind support in the amount of $11,316.50; and authorized and approved the temporary street closure detailed in the staff report for the Downtown Redlands Artwalk to be held on Sunday, March 29, 2026.

Vote: 5 - 0 Passed

First Amendment Arts and Culture Master Plan Agreement

On motion of Council Member Eddie Tejeda, seconded by Mayor Pro Tem Marc Shaw, the City Council unanimously approved, by roll call vote, the First Amendment to the Agreement with Cultural Planning Group, LLC to extend the term of the agreement until April 2, 2026.

Vote: 5 - 0 Passed

Run Through Redlands In-Kind Request

On motion of Council Member Eddie Tejeda, seconded by Mayor Pro Tem Marc Shaw, the City Council unanimously determined, by roll call vote, that approval of the event is exempt from environmental review pursuant to Section 15311(c) of the State's guidelines implementing the California Environmental Quality Act; authorized and approved the expenditure of city resources and in-kind support in the amount of $43,875.54; and authorized and approved the temporary street closures and the sale and consumption of alcohol detailed in the staff report for the Run Through Redlands event, to be held on March 1, 2026.

Vote: 5 - 0 Passed

Amending Temporary Staffing Agreements

On motion of Council Member Eddie Tejeda, seconded by Mayor Pro Tem Marc Shaw, the City Council unanimously approved, by roll call vote, the first amendment to the agreement with AtWork Personnel Services to increase the total compensation by an amount not-to-exceed $150,000 for the final year of the agreement ending June 30, 2026; and approved the first amendment to the agreement with waterTALENT to increase the total compensation by an amount not-to-exceed $150,000 for the final year of the agreement ending June 30, 2026.

Vote: 5 - 0 Passed

COMMUNICATIONS

Human Relations Commission Annual Report

Commission Chair Ken Ford offered the Annual Report of the Human Relations Commission, listing

activities and accomplishments for 2025. The commission and its subcommittees have been developing a program to celebrate various cultural holidays and enhance the Redlands community. It is expected to be finalized in 2026. They hosted a LGBTQ+ forum with community members as panelists. The event was a great opportunity for everyone to hear each other's opinions in a safe and open environment. The HRC is now represented at the joint Redlands Family Services/Church of Jesus Christ of Latter-day Saints food drive. Together, over 20,000 pounds of food were collected. Despite the turnover on the commission and sometimes lack of quorums, the Commission has carried on. He commended the student commissioners who have served over the last few years, praising their attendance and strong leadership skills. Council Members thanked Chair Ford and all his fellow commissioners for their dedication and service.

Traffic and Parking Commission Annual Report

Municipal Utilities and Engineering Interim Director Casey announced that the Annual Report, summarizing the Traffic and Parking Commission's accomplishments for the previous year, was attached to the staff report.

FY 2025 ACFR and Audit Results

Management Services/Finance Director Garcia introduced Andrew Roth of The Pun Group, who provided a detailed analysis of the City's Annual Comprehensive Financial Report (ACAFR) and the Independent Accountants' Report on Applying Agreed-Upon Procedures related to the Article XIII-B Appropriations Limit Calculation for the fiscal year ending June 30, 2025. The ACAFR communicates the City's financial condition and includes an audited summary report of the financial position and transactions of the City for the fiscal year 2025. The Pun Group LLP, a certified public accounting firm, audited these documents and provided an unmodified opinion of the City's financial statements, stating they are fairly presented and that the information used in the report is consistent with generally accepted accounting principles. This is the best opinion that the City can receive from its auditors. Through a series of slides, he highlighted several data points, including the City's Net Position, the General Fund balance as of June 30, 2025, changes in the General Fund balance, the net pension liability, and the audit results, as summarized below:

•Financial Statements are fairly presented in all material respect
•Accounting policies have been consistently applied
•Estimates are reasonable
•Disclosures are properly reflected in the financial statements

As public comment, Dennis Bell voiced his appreciation of the Finance team's work, but he was unhappy that such a lengthy report (321 pages) had been released to the public only five days ago, giving very little opportunity to review it thoroughly. Mayor Saucedo and Council Member Barich were pleased with the numbers reflected in the 'rainy day' funds. Council Members thanked the Pun Group, and Director Garcia and her staff for their exceptional dedication and outstanding effort with the development of the ACAFR. Director Garcia offered special acknowledgments to Assistant Finance Director James Garland and Finance Manager Marie Datuin.

On motion of Mayor Pro Tem Marc Shaw, seconded by Council Member Paul Barich, the City Council unanimously accepted, by roll call vote, the City of Redlands Annual Comprehensive Financial Report and the Independent Accountants' Report on Applying Agreed-Upon Procedures Related to the Article XIII-B Appropriations Limit Calculation for the fiscal year ending June 30, 2025.

Vote: 5 - 0 Passed

NEW BUSINESS

Contract Award 2025 CIP Water Pipeline Replacement Project

Municipal Utilities and Engineering Interim Director Casey reviewed a Public Works Construction Contract with MCC Pipeline, Inc. for the 2025 CIP Water Pipeline Replacement Project for an amount not-to-exceed $4,003,595. The Project will replace approximately 2.75 miles of aging and deteriorated water pipelines. Each year, a portion of revenue from water utility rates is used to replace aging water pipelines throughout the City. These pipelines are selected based on maintenance history, inspection records, and coordination with future paving improvements.

On motion of Council Member Eddie Tejeda, seconded by Council Member Paul Barich, the City Council unanimously determined, by roll call vote, that approval of a Public Works Construction Contract and construction of the 2025 CIP Water Pipeline Replacement Project are categorically exempt from environmental review in accordance with Section 15302 of the State's guidelines implementing the California Environmental Quality Act; approved the 2025 CIP Water Pipeline Replacement Project plans and specifications; and approved a Public Works Construction Contract with MCC Pipeline, Inc. for an amount not-to-exceed $4,003,595.

Vote: 5 - 0 Passed

On-Call Sewer Collection System Repair Service Agreement

Municipal Utilities and Engineering Interim Director Casey summarized the non-professional service agreement with Kirtley Construction, Inc. for On-Call Sewer Collection System Repair on an as-needed basis for an amount not-to-exceed $550,000. The contract requires the contractor to be available twenty-four hours a day and must mobilize for emergency work within two hours of notification.

On motion of Council Member Paul Barich, seconded by Council Member Eddie Tejeda, the City Council unanimously determined, by roll call vote, that approval of a non-professional service agreement with Kirtley Construction, Inc. is exempt from environmental review pursuant to section 15301(b) of the State's guidelines implementing the California Environmental Quality Act; and approved the non-professional service agreement with Kirtley Construction Inc. for On-Call Sewer Collection System Repair on an as-needed basis for an amount not-to-exceed $50,000 for the initial term from effective date to June 30, 2026 with the option to extend the agreement for two (2) additional one (1) year terms at $250,000 each year.

Vote: 5 - 0 Passed

Ordinance No. 3000 Electric Bicycles

Police Chief Tolber presented Ordinance No. 3000 amending Chapter 10.56 of the Redlands Municipal Code relating to electric bicycles (e-bikes). The proposed amendment establishes regulations governing the operation of e-bikes within the City. The ordinance is intended to address public safety concerns associated with increased e-bike usage, align local regulations with California state law, and provide clear operational standards for e-bike users. With the increased usage of e-bikes, the Police Department has reported a significant rise in calls related to e-bike incidents, highlighting the necessity for these regulations. This ordinance not only serves to enhance public safety but also provides a platform for community engagement. The ordinance provides for clear and consistent regulations for e-bike users and aligns with state law, supports infrastructure investments, and addresses the growing use of e-bikes within the community.

Deputy Chief Jeremy Floyd provided detail regarding the three distinct classes of e-bikes based on their operational characteristics, allowing for tailored regulations that enhance safety. In addition, the proposed fines for violations are comparable to those imposed by neighboring jurisdictions. This consistency supports fairness, reinforces compliance, and improves the effectiveness of enforcement efforts.

As public comment, Dennis Bell supported the ordinance but was skeptical about whether the police department had the resources to ensure enforcement. Kevin Stonestreet suggested delaying the vote to allow for a more thorough discussion. Deputy Chief Floyd clarified that e-bikes use pedals and can travel up to 28 mph, while e-motorcycles use pegs and can travel up to 60+ mph (requires a Class M1 or M2 license). E-bikes are allowed on public property such as the Orange Blossom Trail. Assistant City Manager Boatman reported on the recent sightings of e-bike riders constructing ramps and jumps on land owned by SBCTA and Union Pacific, which is not consistent with the law. Council Members highlighted the need for education and working with community partners, including the Redlands Unified School District. Council Member Tejeda recommended utilizing strategically placed signage as a tool to inform the public.

On motion of Mayor Pro Tem Marc Shaw, seconded by Council Member Paul Barich, the City Council unanimously introduced, by roll call vote, Ordinance No. 3000 of the City of Redlands Amending Chapter 10.56 of the Redlands Municipal Code Relating to Electric Bicycles.

Vote: 5 - 0 Passed

Purchase and Sale Agreement Property at 611 W. Redlands Boulevard

Assistant City Manager Boatman provided background on a Purchase and Sale Agreement (PSA) with Miller & Associates, LLC., and Christopher Collinsworth, including assignment of the City's purchase rights for the property located at 611 W. Redlands Boulevard (Assessor Parcel Numbers 0171-031-08 and -09-0000).

This property transaction stems from an inverse condemnation lawsuit filed by the owner, Miller & Associates, Inc. As part of the settlement of that lawsuit, the City was provided the opportunity to purchase the property. This was done in an attempt to offset some of the costs incurred as part of the settlement. The property is located at 611 W. Redlands Boulevard and is situated above a City-owned stormwater facility known as the Mill Creek Zanja. The lawsuit involved claims of damage to the

property as a result of the Zanja. In 2025, the City and the property owner entered into a Settlement and Release Agreement to resolve claims related to alleged settlement impacts associated with the stormwater channel. The settlement amount agreed to with the property owner was $2,100,000. Additionally, as part of that settlement, the City obtained an option to purchase the property.

The PSA implements that option by allowing the City to assign its purchase rights to a third-party buyer. Under the agreement, the seller will convey the property to the buyer, and the City will participate in the transaction through an Assignment and Assumption Agreement that provides a portion of the purchase funds consistent with the previously approved settlement framework.

The total purchase price for the property was previously negotiated at $3.4 million. Of that amount, the buyer will purchase the property for $1.6 million, with the remaining portion of $1,800,000 funded by the City pursuant to the assignment agreement. An additional $20,000 is authorized from the City in the assignment agreement to cover the costs of escrow. The buyer will submit an initial deposit and proceed through a short feasibility period, after which escrow is scheduled to close within the timeframe established in the agreement. The agreement reflects the buyer acquiring the property in its existing condition.

Approval of this agreement allows the City to complete implementation of the prior settlement, facilitates the transfer of the property to private ownership and resolves outstanding issues related to the site, in a manner consistent with Council direction. As public comment, Andy Hoder provided a brief history of the Zanja and emphasized the correct pronunciation.

On motion of Council Member Eddie Tejeda, seconded by Mayor Mario Saucedo, the City Council unanimously determined, by roll call vote, that approval of the Purchase and Sale Agreement with Miller & Associates, LLC., and Christopher Collinsworth, including assignment of the City's purchase rights, is exempt from environmental review pursuant to Section 15061(b)(3) of the State's guidelines implementing the California Environmental Quality Act; approved the Purchase and Sale Agreement with Miller & Associates, LLC., and Christopher Collinsworth, including assignment of the City's purchase rights, for the property located at 611 W. Redlands Boulevard; and authorized an additional appropriation in the amount of $1,820,000 from the General Fund's unassigned fund balance to finance the City's portion of this agreement.

Vote: 5 - 0 Passed

COUNCIL MEMBER ANNOUNCEMENTS AND ACTIVITIES

Mayor Saucedo participated in Civics Day, enjoyed the Boys and Girls Club Chocolate & Champagne Fantasy Gala, the Lincoln Shrine Dinner, participated in the Lincoln Pilgrimage Walk, toured the newly opened Liberty Lane project, attended the ESRI Forum, spotlighting Chief Tolber, and the Redlands Area Interrfaith Council meeting.

Mayor Pro Tem Shaw participated in Civics Day, which offered students a hands-on experience of the inner workings of local government.

Council Member Barich attended the Annual Lincoln Shrine Dinner, the ESRI Forum, highlighting Chief Tolber, and he participated in Civics Day. He also enjoyed the Chocolate & Champagne Fantasy Gala, hosted by the Boys and Girls Club.

Council Member Tejeda celebrated Valentine's Day.

Council Member Davis participated in the monthly Omnitrans meeting, recognizing Transit Equity Day and honoring the legacy of Rosa Parks.

ADJOURNMENT

There being no further action required the meeting adjourned at 7:35 P.M. The next regular meeting of the City of Redlands City Council will be held on March 3, 2026.

City Council Meeting **I. 2.**

DATE: 03/03/2026

TO: Honorable Mayor and City Council Members

SUBJECT: Authorize issuance of a proclamation declaring the month of March 2026 as Women's History Month (Mayor Saucedo)

MOTION:

I move to authorize the issuance of a proclamation declaring the month of March 2026 as Women's History Month.

Attachments

Women's History Month 2026

PROCLAMATION

Women's History Month

WHEREAS, the month of March was selected as Women's History Month to coincide with the United Nations' sponsorship of International Women's Day on March 8th as a time to commemorate women's rights and peace; and

WHEREAS, women of every race, class, ethnicity, sexual orientation, gender identity and ability have made historic contributions to the growth and strength of our state and nation in countless recorded and unrecorded ways; and

WHEREAS, women have influenced and advanced every facet of American life and culture. The strength, ingenuity, and spirit of our female leaders, innovators, and pioneers shape our Nation's character, government, industry, families, and communities; and

WHEREAS, women have significantly influenced public policy and contributed to the building of viable institutions and organizations that continue to support our communities today and the knowledge, skills, and abilities of women contribute to a more robust workforce and a more prosperous economy; and

WHEREAS, women have been leaders, not only in securing their own rights of suffrage and equal opportunity, but also in the abolitionist movement, emancipation movement, industrial labor movement, civil rights movement, peace movement, and more that aim to create a more fair and just society for all; and

WHEREAS, in remembering the trailblazers of the past and the heroines of present day, we honor their legacies by carrying forward the valuable lessons learned from the powerful examples they set; and

WHEREAS, we also recognize the countless accomplishments of local women within our community who teach our children, care for our sick, serve in our military, start businesses, serve in elected positions, or venture into unknown frontiers. Generations of women have had to overcome obstacles put in the way of their achievement and we reaffirm our commitment to supporting the next generation of female trailblazers and dreamers as they carry forward this distinguished legacy.

NOW, THEREFORE, BE IT RESOLVED that the City Council of the City of Redlands hereby proclaims the month of March 2026 as Women's History Month and hereby encourages its residents to learn more about the rich and diverse history of women through available programs, reading, ceremonies, and educational activities.

IN WITNESS WHEREOF, we hereunto affix our signatures and Official Seal of the City of Redlands on this 3rd day of March 2026.

_____

Mario Saucedo, Mayor

Attest:

_____

Jeanne Donaldson, City Clerk

City Council Meeting **I. 3.**

DATE: 03/03/2026

TO: Honorable Mayor and City Council Members

SUBJECT: Authorize issuance of a proclamation declaring the month of March 2026 as Developmental Disabilities Awareness Month (Mayor Saucedo)

MOTION:

I move to authorize the issuance of a proclamation declaring the month of March, 2026 as Developmental Disabilities Awareness Month.

Attachments

Developmental Disabilities Awareness Month 2026

PROCLAMATION

Developmental Disabilities Awareness Month

WHEREAS, Public Law 99–483, enacted by the United States Congress in 1987, designated the month of March as National Developmental Disabilities Awareness Month; and

WHEREAS, developmental disabilities are related to a group of physical, learning, language, or behavioral conditions that last throughout a person's lifetime, such as ADHD, Autism, Cerebral Palsy, Down Syndrome, intellectual disability, learning disability, and other disabilities; and

WHEREAS, an estimated 615,252 Californians live with intellectual and other developmental disabilities, with approximately 1,500 individuals with developmental disabilities living in the City of Redlands; and

WHEREAS, people with developmental disabilities should be treated with dignity and respect and should have the resources needed to live secure, fulfilling lives and access their communities and services needed; and

WHEREAS, stereotyping, discrimination, and bullying toward individuals with developmental disabilities are the biggest barriers to full community integration and inclusion of people with developmental disabilities; and

WHEREAS, awareness of barriers people with developmental disabilities can face in participating in the community, and collaboration on how to overcome those barriers, can bring about broader inclusion and better outcomes for everyone; and

WHEREAS, the City of Redlands strives to be an inclusive and equitable community where everyone is appreciated for their unique abilities; and

WHEREAS, Nate's Fruit Fusion, a special needs business located in the City of Redlands not only serves delicious, refreshing beverages, but creates job opportunities that are specifically designed to coach, train, and empower young adults in our community with intellectual disabilities;

NOW, THEREFORE, BE IT RESOLVED that the City Council of the City of Redlands does hereby proclaim the month of March 2026 as Developmental Disabilities Awareness Month in the City of Redlands and encourages all residents, businesses, schools, government agencies, and public and private institutions to recognize the ability of individuals with developmental disabilities to make significant contributions to their communities.

IN WITNESS WHEREOF, we hereunto affix our signatures and Official Seal of the City of Redlands on this 3rd day of March 2026.

_____

Mario Saucedo, Mayor

Attest:

_____

Jeanne Donaldson, City Clerk

City Council Meeting **I. 4.**

DATE: 03/03/2026

TO: Honorable Mayor and City Council Members

SUBJECT: Adopt Resolution No. 8754 Designating Local Agency Officials Required to Complete Fiscal and Financial Training Pursuant to Senate Bill 827 (Government Code Section 53238, et seq.) (Assistant City Manager McConnell)

MOTION(S):

If the City Council determines that staff's recommendation is appropriate, the following motion is provided:

I move to adopt Resolution No. 8754.

RECOMMENDATION:

It is recommended that the City Council adopt Resolution No. 8754 designating local agency officials required to complete Fiscal and Financial Training pursuant to Senate Bill 827 (Government Code Section 53238, et seq.)

DISCUSSION:

Senate Bill 827 (SB 827), effective January 1, 2026, added Government Code Section 53238, et seq., which establishes mandatory Fiscal and Financial Training requirements for designated local agency officials. The purpose of SB 827 is to ensure that officials who oversee or influence fiscal decisions have a clear understanding of financial administration, budgeting, fiscal management, and the ethical safeguarding of public resources.

SB 827 requires local agencies to designate which officials are subject to the training and to maintain records documenting compliance. The required training consists of a minimum two-hour Fiscal and Financial Training covering topics such as municipal financial administration, budgeting and auditing, capital financing and debt management, pensions and other postemployment benefits, cash management and investments, and ethical stewardship of public funds.

The proposed resolution designates specific City officials whose duties include fiscal oversight, policy direction, or operational responsibility, including members of the City Council, the City Clerk and City Treasurer, the City Manager and Assistant City Manager(s), the City Attorney, and City Department Directors and Assistant Directors. The resolution also establishes compliance timelines consistent with state law. Officials in service prior to January 1, 2026, must complete the required training by January 1, 2028, unless their term or service ends prior to January 9, 2028. Officials who commence service on or after January 1, 2026, must complete the training within six (6) months of their first day of service. All designated officials are required to complete the training at least once every two (2) years thereafter.

In addition, SB 827 requires the City to maintain training records for at least five (5) years and to provide members of the public with clear instructions for requesting copies of such records. Adoption of this resolution allows the City to meet its statutory obligations and remain in compliance with state law.

ALTERNATIVES:

The Council may request staff to modify the list of designated officials subject to the training requirements.

STRATEGIC PLAN:

Not Applicable

SUBMITTED BY:
Janice McConnell, Assistant City Manager

RECOMMENDED BY:
Charles M. Duggan Jr., City Manager

REVIEWED BY:
Yvette M. Abich Garcia, City Attorney
Janice McConnell, Assistant City Manager
Danielle Garcia, Management Services/Finance Director

PREPARED BY:
Whitney Mesna, Management Analyst

Fiscal Impact

Fiscal Year: FY 2025-26
Appropriation Required Y/N: No
Discussion:

The fiscal impact is expected to be minimal and will be absorbed within the City's existing training budget. No additional appropriations are required.

Attachments

Resolution No. 8754

RESOLUTION NO. 8754

A RESOLUTION OF THE CITY COUNCIL OF THE CITY OF REDLANDS DESIGNATING LOCAL AGENCY OFFICIALS THAT MUST COMPLY WITH FISCAL AND FINANCIAL TRAINING REQUIRED PURSUANT TO SENATE BILL 827 (CALIFORNIA GOVERNMENT CODE SECTION 53238, ET SEQ.)

WHEREAS, Senate Bill 827 (Government Code Section 53238, et seq.) was enacted into law effective January 1, 2026, and requires, among other things, a two-hour Fiscal and Financial Training applicable to designated Local Agency Officials; and

WHEREAS, Senate Bill 827 defines "Fiscal and Financial Training" to include:

(a) Laws and principles relating to financial administration and short- and long-term fiscal management, including, but not limited to, the role and responsibilities of financial administration, financial policies, municipal budgets and budget processes, and financial reporting and auditing.

(b) Laws and principles relating to, but not limited to, capital financing and debt management, mechanisms for local agency revenues, pensions and other postemployment benefits, cash management and investments, the prudent investor standard, and the ethics of safeguarding public resources.

(c) General fiscal and financial planning principles and any pertinent laws relevant to the local agency official's public service and role in overseeing the local agency's operations and relevant to the local agency's procurement and contracting practices and responsibilities; and

WHEREAS, Senate Bill 827 also requires that Local Agency Officials who have commenced service with a local agency prior to January 1, 2026, complete Fiscal and Financial Training by January 1, 2028, with the exception of terms that end before January 9, 2028; and

WHEREAS, Senate Bill 827 also requires that Local Agency Officials who commence service with a local agency on or after January 1, 2026, complete Fiscal and Financial Training within six (6) months from the first day of service with the local agency; and

WHEREAS, Local Agency Officials shall obtain Fiscal and Financial Training at least once every two (2) years from the date of the initial training; and

WHEREAS, Senate Bill 827 requires the local agency to maintain records of Local Agency Officials' completion of Fiscal and Financial Training.

NOW, THEREFORE, BE IT RESOLVED BY THE CITY COUNCIL OF THE CITY OF REDLANDS AS FOLLOWS;

Section 1. The City Council hereby designates the following Local Agency Officials to complete Fiscal and Financial Training pursuant to Government Code Section 53238, et seq.:

(a) Members of the City Council, the City Clerk and the City Treasurer of the City of Redlands.

(b) City Manager and Assistant City Manager(s).

(c) City Attorney.

(d) Department Directors and Assistant Directors.

Section 2. All Local Agency Officials designated in Section 1 who are in service with the City of Redlands prior to January 1, 2026, shall complete Fiscal and Financial Training no later than January 1, 2028, unless that officials' term of office or service with the City ends before January 9, 2028, and at least once every two (2) years thereafter.

Section 3. All Local Agency Officials designated in Section 1 who commences service with the City of Redlands on or after January 1, 2026, shall complete Fiscal and Financial Training no later than six (6) months from the first day of service with the City of Redlands, at least once every two (2) years thereafter.

Section 4. Senate Bill 827 requires that the City maintain records related to Local Agency Officials' Fiscal and Financial Training which includes (a) the dates that the Local Agency Officials satisfied the Fiscal and Financial Training; and (b) the entity that provided the training.

Section 5. Training records shall be maintained by the City for at least five (5) years after the Local Agency Official completed the training. The City's website shall provide clear instructions and contact information for members of the public to request copies of such training records.

Section. 6. This Resolution shall take effect immediately upon its adoption.

ADOPTED, SIGNED AND APPROVED this 3rd day of March, 2026.

_____
Mario Saucedo, Mayor

ATTEST:

_____
Jeanne Donaldson, City Clerk

I, Jeanne Donaldson, City Clerk of the City of Redlands, hereby certify that the foregoing Resolution was duly adopted by the City Council at a regular meeting thereof, held on the _____ day of _____, 2026, by the following vote:

AYES:

NOES:

ABSTAIN:

ABSENT:

_____
Jeanne Donaldson, City Clerk

City Council Meeting **I. 5.**

DATE: 03/03/2026

TO: Honorable Mayor and City Council Members

SUBJECT: Adopt Resolution No. 8755 Designating Local Agency Officials Required to Complete Ethics Training Pursuant to Assembly Bill 1234 as Expanded by Senate Bill 827 (Assistant City Manager McConnell)

MOTION(S):

If the City Council determines that staff's recommendation is appropriate, the following motion is provided:

I move to adopt Resolution No. 8755.

RECOMMENDATION:

It is recommended that the City Council adopt Resolution No. 8755 designating Local Agency Officials required to complete Ethics Training in compliance with Assembly Bill 1234 (Government Code Section 53234, et seq.), as expanded by Senate Bill 827.

DISCUSSION:

Assembly Bill 1234 (AB 1234), effective January 1, 2006, established mandatory Ethics Training requirements for designated Local Agency Officials, as codified in Government Code Section 53234, et seq. The purpose of AB 1234 is to ensure that public officials receive regular training on ethics laws governing public service, including conflict-of-interest laws, restrictions on gifts and use of public resources, transparency requirements, and fair decision-making processes.

Senate Bill 827 (SB 827), effective January 1, 2026, expanded the definition of "Local Agency Official" subject to AB 1234 Ethics Training requirements to include department heads and similar administrative officers of a local agency. SB 827 also shortened the timeframe for officials who commence service on or

after January 1, 2026, to complete the required Ethics Training.

The proposed resolution formally designates the Local Agency Officials required to complete Ethics Training, including members of the City Council, members of City commissions, boards, and committees, the City Manager, the City Attorney, the Assistant City Managers and all employees and contractors who are "Designated Filers" and required to file a Form 700 pursuant to the City's Local Conflict of Interest Code. The resolution also establishes compliance timelines consistent with state law, requiring officials who commenced service prior to January 1, 2026, to complete training by January 1, 2027, and officials commencing service on or after January 1, 2026, to complete training within six (6) months of their first day of service. All designated officials must complete Ethics Training at least once every two (2) years thereafter.

Additionally, SB 827 requires the City to maintain Ethics Training records for a minimum of five (5) years and to provide clear public instructions for requesting access to those records. Adoption of this resolution enables the City to remain in compliance with state ethics training requirements.

ALTERNATIVES:

The City Council may request staff to modify the list of Local Agency Officials subject to the Ethics Training requirements.

STRATEGIC PLAN:

Not Applicable

SUBMITTED BY:
Janice McConnell, Assistant City Manager

RECOMMENDED BY:
Charles M. Duggan Jr., City Manager

REVIEWED BY:
Yvette M. Abich Garcia, City Attorney
Danielle Garcia, Management Services/Finance Director

PREPARED BY:
Whitney Mesna, Management Analyst

Fiscal Impact

Fiscal Year: FY 2025-26
Appropriation Required Y/N: No
Discussion:

The fiscal impact is expected to be minimal and will be absorbed within the City's existing training budget. No additional appropriations are required.

Attachments

Resolution No. 8755

RESOLUTION NO. 8755

A RESOLUTION OF THE CITY COUNCIL OF THE CITY OF REDLANDS DESIGNATING LOCAL AGENCY OFFICIALS THAT MUST COMPLY WITH AB 1234 ETHICS TRAINING AS EXPANDED BY SENATE BILL 827 (CALIFORNIA GOVERNMENT CODE SECTION 53234, ET SEQ.)

WHEREAS, Assembly Bill 1234 was enacted into law effective January 1, 2006, and codified in Government Code Section 53234, *et seq.* establishing an Ethics Training requirement for Local Agency Officials*;* and

WHEREAS, the Ethics Training under Assembly Bill 1234 is required to cover, at minimum, the following ethics law:

(a) Laws relating to personal financial gain by public servants, including, but not limited to, laws prohibiting bribery and conflict-of-interest laws.

(b) Laws relating to claiming perquisites of office, including, but not limited to, gift and travel restrictions, prohibitions against the use of public resources for personal or political purposes, prohibitions against gifts of public funds, mass mailing restrictions, and prohibitions against acceptance of free or discounted transportation by transportation companies.

(c) Government transparency laws, including, but not limited to, financial interest disclosure requirements and open government laws.

(d) Laws relating to fair processes, including, but not limited to, common law bias prohibitions, due process requirements, incompatible offices, competitive bidding requirements for public contracts, and disqualification from participating in decisions affecting family members.

WHEREAS, Assembly Bill 1234 defined a “Local Agency Official” as any member of a local agency "legislative body" or any elected official who receives any type of compensation, salary, or stipend or reimbursement for actual and necessary expenses incurred in the performance of official duties; and

WHEREAS, Assembly Bill 1234 defined "legislative body" as the governing body of a local agency or any other local body created by state or federal statute, and including a commission, committee, board, or other body of a local agency, whether permanent or temporary, decision making or advisory, created by charter, ordinance, resolution or formal action of a legislative body; and

WHEREAS, Senate Bill 827 was enacted into law effective January 1, 2026, expanding the definition of “Local Agency Official” to include, among other things, a “department head or similar administrative officer of a local agency” who is required to receive Ethics Training under Assembly Bill 1234; and

WHEREAS, Senate Bill 827 also shortened the time period for Local Agency Officials commencing service on or after January 1, 2026, to complete Ethics Training.

NOW, THEREFORE, BE IT RESOLVED BY THE CITY COUNCIL OF THE CITY OF REDLANDS AS FOLLOWS;

Section 1. The City Council hereby designates the following Local Agency Officials to complete Ethics Training pursuant to Government Code Section 53235.1:

a. Members of the City Council, and any elected officer of the City of Redlands that receives any type of compensation, salary or stipend or reimbursement for actual and necessary expenses incurred in the performance of official duties.
b. A member of a commission, committee, board, or other body of a local agency, whether permanent or temporary, decision making or advisory, created by charter, ordinance, resolution or formal action of a legislative body.
c. City Manager and Assistant City Manager(s).
d. City Attorney.
e. Employees and contractors who are "Designated Filers" and required to file a Form 700 pursuant to the City's Local Conflict of Interest Code.

Section 2. For those Local Agency Officials that are city employees in Section 1 above, who commenced service with the City of Redlands prior to January 1, 2026, shall have until January 1, 2027, to complete Ethics Training, and shall receive Ethics Training at least once every two (2) years thereafter.

Section 3. All Local Agency Officials commencing service with the City on or after January 1, 2026 shall complete Ethics Training no later than 6 months from the first day of service with the City of Redlands and shall receive Ethics Training at least once every two (2) years thereafter.

Section 4. Senate Bill 827 requires that the City maintain records related to Local Agency Officials' Ethics Training which includes (a) the dates that the Local Agency Officials satisfied the Ethics Training; and (b) the entity that provided the training.

Section 5. Training records shall be maintained by the City for at least five (5) years after the Local Agency Official completed the training. The City's website shall provide clear instructions and contact information for members of the public to request copies of such training records.

Section. 6. This Resolution shall take effect immediately upon its adoption.

ADOPTED, SIGNED AND APPROVED this 3rd of March, 2026.

_____
Mario Saucedo, Mayor

ATTEST:

_____

Jeanne Donaldson, City Clerk

I, Jeanne Donaldson, City Clerk of the City of Redlands, hereby certify that the foregoing Resolution was duly adopted by the City Council at a regular meeting thereof, held on the _____ day of _____, 2026, by the following vote:

AYES:

NOES:

ABSTAIN:

ABSENT:

_____
Jeanne Donaldson, City Clerk

City Council Meeting **I. 6.**

DATE: 03/03/2026

TO: Honorable Mayor and City Council Members

SUBJECT: Authorize acceptance of the 2023 Homeland Security Grant Program funding award in the amount of $14,501 for the purchase of portable radios and authorize an additional appropriation for the same amount. (Fire Chief Sessler)

MOTION(S):

If the City Council determines that staff's recommendation is appropriate, the following motions are provided:

I move to accept the Federal Emergency Management Agency 2023 Homeland Security Grant Program funds in the amount of $14,501 for the purchase of portable radios, and approve an additional appropriation for the same.

RECOMMENDATION:

Staff recommends that City Council accept the Federal Emergency Management Agency 2023 Homeland Security Grant Program funds in the amount of $14,501 for the purchase of portable radios, and approve an additional appropriation for the same.

DISCUSSION:

To keep up with changing technology and ensure proper communication ability during major emergencies, the Redlands Fire Department sought funding for the purchase of two (2) APXNEXT XN 800 MHz Portable Radios, chargers, and accessories. These new portable radios will replace current XTS5000 radios that have been in service for 18 years. The new APX6000 radios also have the ability to interface with our self-contained breathing apparatus (SCBA). The ability for our SCBA to link directly to our portable radios will improve the clarity of radio transmissions, as well as enhance overall incident communications during emergent events, including acts of terrorism. Surrounding agencies are also upgrading their portable radios to the newer Motorola radios, which will

improve interoperability and communications when responding to a multi-agency incident. The APX6000 radios will coincide with the programming capabilities and format that our current radio shop supports. These new APX6000 radios will allow the department to transition away from obsolete technology, while improving interoperability with local, state and federal agencies.

ALTERNATIVES:

City Council may elect to deny funding from the FEMA FY2023 Homeland Security Grant Program for portable radios and direct staff accordingly.

STRATEGIC PLAN:

Priority B - Public Health & Safety

SUBMITTED BY:
Rich Sessler, Fire Chief

RECOMMENDED BY:
Charles M. Duggan Jr., City Manager

REVIEWED BY:
Janice McConnell, Assistant City Manager
Danielle Garcia, Management Services/Finance Director

PREPARED BY:
Bruni Reyes, Management Analyst

Fiscal Impact

Fiscal Year: FY 2025-26

Discussion:

There is no fiscal impact associated with the acceptance of the FEMA 2023 Homeland Security Grant Program funding.

Attachments

Authorization Letter

Additional Appropriation

1743 Miro Way, Rialto, CA 92376 | Phone: 909.356.3998 Fax: 909.356.3965
www.SBCounty.gov

SAN BERNARDINO COUNTY

Office of Emergency Services

Luther Snoke
Chief Executive Officer

Crisanta Gonzalez
Director

September 23, 2024

TO: **GRANT PROGRAM MANAGER**

SUBJECT: **FY2023 HOMELAND SECURITY GRANT PROGRAM APPROVAL**

The San Bernardino County Office of Emergency Services has approved your Fiscal Year 2023 Homeland Security Grant Program (FY23 HSGP) application. As of the date of this letter, you are authorized to make expenditures using FY23 HSGP funds. The performance period ends on March 31, 2026.

Be aware that your project allocation amount may have changed. Take note of the amount located on the attached project workbook.

Any activities requiring additional review (e.g., Environmental and Historic Preservation, Performance Bond Waivers, procurement of Aviation or Controlled Equipment, etc.) shall not incur costs until you receive written approval for those activities.

General procurement standards with open competition must be followed for all Federal grant expenditures, according to 2 C.F.R. § 200.318-200.323.

This subaward is subject to all provisions of 2 C.F.R. Part 200, Subpart F – Audit Requirements. Any funds owed as a result of an audit, must be refunded to the State within 30 days upon receipt of an invoice.

Refer to the grant Assurances, Application Workbook, and grant guides for procedures and requirements.

If you have any questions, please feel free to contact Tina Sutera at (909) 356-2565.

Sincerely,

Crisanta Gonzalez

CRISANTA GONZALEZ, Director
San Bernardino County
Office of Emergency Services

CG/ts

Attachments

BOARD OF SUPERVISORS
COL. PAUL COOK (RET.) Vice Chairman, First District | JESSE ARMENDAREZ Second District | DAWN ROWE Chair, Third District | CURT HAGMAN Fourth District | JOE BACA, JR. Fifth District | Luther Snoke Chief Executive Officer

CITY OF REDLANDS
REQUEST FOR ADDITIONAL APPROPRIATION

DATE OF REQUEST: 02/03/2026

FINANCE USE ONLY
TRANSACTION NO:
ACCOUNTING PERIOD:

An additional appropriation is hereby requested as follows:

Department: Fire Department

EXPENDITURE APPROPRIATION INCREASE (if applicable)				
Account Description	**Orgkey**	**Object Code**	**Job Ledger (If applicable)**	**Amount**
Special Departmental Supplies	200250	7810		$ 14,501.00
				$ $ 14,501.00

REVENUE APPROPRIATION INCREASE (if applicable)				
Account Description	**Orgkey**	**Object Code**	**Job Ledger (If applicable)**	**Amount**
200250	200250	4407		$ 14,501.00
				$ $ 14,501.00

JUSTIFICATION: FEMA FY23 Homeland Security Grant

Requested By: _____
Department Head

Recommended By Finance Director:

Yes _____ No _____ Signed _____

Recommended: _____
City Manager

Comments: _____

Approved by City Council:

Date: _____

Signed: _____
City Clerk

City Council Meeting **I. 7.**

DATE: 03/03/2026

TO: Honorable Mayor and City Council Members

SUBJECT: Adopt Resolution No. 8753 Delegating Investment Authority to the City Treasurer Pursuant to Government Code Section 53607 (Management Services/Finance Director Garcia)

MOTION(S):

If the City Council determines that the staff's recommendation is appropriate, the following motion is provided:

I move to adopt Resolution No. 8753.

RECOMMENDATION:

Staff recommends that the City Council adopt Resolution No. 8753 to authorize the annual delegation of duties of investing City funds to the City Treasurer in accordance with Government Code Section 53607.

DISCUSSION:

Government Code Section 53607 allows the City Council to delegate the authority to invest City funds to the City Treasurer for a one-year period. This delegation is a routine, recurring annual action and is consistent with the City's past practice. In general terms, it authorizes the Treasurer to conduct day-to-day investment activity, such as placing funds in permitted, low-risk investment vehicles and managing maturities and cash flow, within the limits of the City's adopted Investment Policy and applicable legal requirements. The annual term ensures the Council retains oversight by reaffirming the delegation each year and receiving regular reporting on investment activity and performance.

ALTERNATIVES:

Not Applicable.

STRATEGIC PLAN:

Not Applicable.

SUBMITTED BY:
Danielle Garcia, Management Services/Finance Director

RECOMMENDED BY:
Phillip Doolittle, City Treasurer

REVIEWED BY:
Charles M. Duggan, Jr. City Manager
Yvette Abich Garcia, City Attorney
Janice McConnell, Assistant City Manager

PREPARED BY:
Aimee Hoover, Revenue Manager

Fiscal Impact

Discussion:
There is no fiscal impact associated with approval of this resolution.

Attachments

Resolution No. 8753

RESOLUTION NO. 8753

A RESOLUTION OF THE CITY COUNCIL OF THE CITY OF REDLANDS DELEGATING INVESTMENT AUTHORITY TO THE CITY TREASURER PURSUANT TO GOVERNMENT CODE SECTION 53607

WHEREAS, Government Code section 53607 authorizes the City Council to delegate the duties of investing or reinvesting funds of the City, or to sell or exchange securities so purchased, to the City Treasurer for a period not exceeding one year; and

WHEREAS, it is the desire of the City Council to delegate investment authority of City funds to the City Treasurer;

NOW, THEREFORE, be it resolved by the City Council of the City of Redlands as follows:

Section 1. That the City Treasurer is hereby delegated the authority to invest, or reinvest funds of the City, or to sell or exchange securities so purchased, for the period commencing on March 16, 2026, through March 15, 2027, pursuant to Government Code Section 53607. City Treasurer as referenced includes the Deputy City Treasurer.

Section 2. That the City Treasurer shall prepare a monthly report for the City Council of all transactions subject to this Resolution, as required by Government Code Section 53607.

ADOPTED, SIGNED AND APPROVED this 3rd day of March, 2026.

_____
Mario Saucedo, Mayor

ATTEST:

_____
Jeanne Donaldson, City Clerk

I, Jeanne Donaldson, City Clerk of the City of Redlands, hereby certify that the foregoing Resolution was duly adopted by the City Council at a regular meeting thereof held on the 3rd day of March, 2026, by the following vote:

AYES:

NOES:

ABSTAIN:

ABSENT:

_____

Jeanne Donaldson, City Clerk

City Council Meeting **I. 8.**

DATE: 03/03/2026

TO: Honorable Mayor and City Council Members

SUBJECT: Approve the First Amendment to an Agreement with Systems & Software, Inc. to clarify that the Software License is Perpetual (Management Services/Finance Director Garcia)

MOTION(S):

If the City Council determines that staff's recommendation is appropriate, the following motion is provided:

I move to approve the First Amendment to the Agreement with Systems & Software, Inc. for Software License, Services, Support, Maintenance, and Hosting Services.

RECOMMENDATION:

Approve the First Amendment to the Agreement for Software License, Services, Support, Maintenance, and Hosting Services with Systems & Software, Inc. (S&S) to amend Section 2.1.1 regarding software licensing terms.

DISCUSSION:

On November 19, 2024, the City entered into an Agreement with Systems & Software, Inc. (S&S) for software licensing, services, support, maintenance, and hosting services. The Agreement included the purchase of perpetual licenses for enQuesta v6 CIS, COBOL, Capricorn CSS Portal, and PerfectApps Smart Forms.

This First Amendment clarifies the licensing language in Section 2.1.1 of the Agreement by explicitly distinguishing between perpetual and subscription-based licenses and confirming that the software stated in the agreement is perpetually licensed. The amendment is clarifying in nature and does not modify the scope of services, term, or cost of the Agreement.

ALTERNATIVES:

The City Council may choose to reject, modify, or table the First Amendment.

STRATEGIC PLAN:

Approval of this First Amendment supports the City's Strategic Plan goals related to effective governance and operational efficiency by ensuring that contractual documents accurately reflect the City's software licensing rights and provide clarity for long-term system use and maintenance.

SUBMITTED BY:
Daniel Garcia, Management Services/Finance Director

RECOMMENDED BY:
Charles M. Duggan Jr., City Manager

REVIEWED BY:
Aimee Hoover, Revenue Manager
Yvette M. Abich Garcia, City Attorney
Janice McConnell, Assistant City Manager

PREPARED BY:
Ashley Deem-Sepulveda, Administrative Analyst

Fiscal Impact

Fiscal Year:	2025-2026
Revenue Generating:	No
Appropriation Required Y/N:	No
Amount:	$0.00
Budgeted Y/N:	NA

Discussion:
There is no fiscal impact associated with this amendment to the agreement.

Attachments

Amendment to Agreement Systems & Software
Original Agreement

FIRST AMENDMENT TO AGREEMENT TO PERFORM PROFESSIONAL SERVICES

This first amendment ("First Amendment") to the agreement for Software License, Subscription, Services, Support and Maintenance and Hosting Services ("Agreement"), dated November 19, 2024, by and between the City of Redlands, a municipal corporation and a general law city ("City"), and Systems & Software, Inc. ("S&S") ("Consultant"), is made and entered into this 3rd day of March, 2026.

RECITALS

WHEREAS, it is the desire of the City and Consultant to amend their existing Agreement, specifically Section 2.1.1 *Grant of Licenses*;

WHEREAS, the parties entered into the Agreement, which included a Statement of Work with the purchase of perpetual licenses for enQuesta v6 CIS, COBOL, Capricorn CSS Portal, and PerfectApps Smart Forms;

NOW, THEREFORE, for good and valuable consideration in the receipt of which is hereby acknowledged City and Consultant agree as follows:

AGREEMENT

Section 1. Section 2.1 Article 2.1.1 of the Agreement, entitled "Software is licensed, not sold," is hereby amended to read as follows:

"2.1.1 S&S Software is licensed, not sold. Software under this Agreement may be licensed perpetually or on a subscription basis. It is expressly understood that enQuesta v6 CIS; COBOL; Capricorn CSS Portal; and PerfectApps Smart Forms are perpetually licensed under the agreement.

2.1.1.1 Perpetual Licenses. For Software licensed to Organization on a perpetual basis, as indicated on Schedule "B," and subject to the terms and conditions of this Agreement, including without limitation the payment of the License Fees, S&S hereby grants to the Organization a personal, non-exclusive, non-transferable and limited right and license to use the Software in object code format for the number of Concurrent Users specified in Schedule "B" (the "License"). This License does not apply to Third Party Software, which are licensed pursuant to their terms.

2.1.1.2 Subscription Licenses. For Software licensed to Organization on a subscription basis, as indicated in Schedule "B," and subject to the terms and conditions of this Agreement including without limitation the payment of the Subscription Fees on an ongoing basis, S&S hereby grants to the Organization a personal, non-exclusive, non-transferable and limited right and license to use the Software in object code format on the Hosting Site and for the number of Concurrent Users specified in Schedule "B" (the "License"). All Releases installed by Organization are subject to this License. This License and the other terms and conditions related to this License do not apply to Third Party Software except as this Subscription Agreement may state otherwise."

Section 2. All other provisions of the Agreement shall remain unchanged by this First Amendment and are in effect.

IN WITNESS WHEREOF, the parties have executed this First Amendment, to be effective as of March 3, 2026.

CITY OF REDLANDS

_____
Mario Saucedo, Mayor

ATTEST:

_____
Jeanne Donaldson, City Clerk

SYSTEMS & SOFTWARE, INC.

By: _____

Master Agreement

Software License, Subscription, Services, Support and Maintenance, and Hosting Services Agreement

Systems & Software, Inc.
10 E Allen St, Suite 201
Winooski, VT 05404

Contents

Master Agreement Terms and Conditions 3
Schedule "B" – Statement of Work ("SOW") 32
Schedule "C" – Standard Support and Maintenance Guidelines 33
Schedule "D" – Insurance Requirements 34
Schedule "E" – Third Party Software Licenses and Third Party Software Terms 35

Master Agreement Terms and Conditions

THIS SOFTWARE LICENSE, SERVICES, SUPPORT AND MAINTENANCE, AND HOSTING SERVICES AGREEMENT (the "Agreement") made as of the 19th day of November, 2024(the "Effective Date").

BETWEEN: Systems & Software, Inc. ("**S&S**").

- and -

City of Redlands, a municipal corporation ("Organization")

WHEREAS, S&S wishes to grant the Organization a license to utilize certain Software; to provide certain Services related to said Software; and to enter into an agreement for the Support and Maintenance of said Software; and to provide certain Hosting Services to Organization; and

WHEREAS, the Organization wishes to acquire a license to utilize the Software; to obtain Services related to said Software; to acquire ongoing Support and Maintenance for said Software; and to obtain Hosting Services for said Software and its system;

NOW THEREFORE, in consideration of the mutual covenants set out in this Agreement and for other good and valuable consideration (the receipt and sufficiency of which is hereby acknowledged), the parties agree as follows:

ARTICLE I: INTERPRETATION

Section 1.1 **Definitions**

1.1.1 **"Annual Hosting Fees"** means any Annual Hosting Fees included in the SOW (Schedule "B") to this Agreement.

1.1.2 "**Annual Subscription Fees**" means any annual subscription fees for Software licensed on a subscription basis as set out in Schedule "B" to this Agreement.

1.1.3 "**Applicable Data Protection Law**" means all data privacy or data protection laws or regulations globally that apply to the Processing of Personal Information under this Agreement and Oracle's Data Processing Agreement referred to in Schedule "H-4", which may include Applicable European Data Protection Law.

1.1.4 "**Applicable European Data Protection Law**" means (i) the EU General Data Protection Regulation EU/2016/679, as supplemented by applicable EU Member State law and as incorporated into the EEA Agreement; (ii) the Swiss Federal Act of 19 June 1992 on Data Protection, as amended; and (iii) the UK Data Protection Act 2018.

1.1.5 "**Completion of Services**" means that the Software is operational and performing in conformity with the specifications set out herein. Completion of Services will be deemed to have occurred on the date which the Organization commences using the Software as its predominant business system.

1.1.6 "**Concurrent Users**" means the total number of Users who can access the Software at any one time as detailed in Schedule "B," and further described in Article II.

1.1.7 "**Concurrent User License**" means a license that restricts the total number of Users who can access the Software at any one time to the number detailed in Schedule "B".

1.1.8 **"Confidential Information"** means, with respect to a party hereto, all information or material which: is marked "Confidential," "Restricted," or "Proprietary Information" or other similar marking,. Confidential

Information of S&S shall include, without limitation, the Software, the Service Specifications, the terms and pricing under this Agreement, and any information with respect to the Hosting Services that S&S may provide to Customer from time to time, including without limitation, all information disclosed by S&S relating to the security of its facilities, computer systems and products. Confidential Information does not include information to the extent that such information: (i) is or becomes generally known to the public through no act or omission of the receiving party; (ii) was in the receiving party's lawful possession prior to the disclosure and had not been obtained by the receiving party either directly or indirectly from the disclosing party as evidenced by its written records; (iii) is lawfully disclosed to the receiving party by a third party without restriction on the disclosure; or (iv) is independently developed by the receiving party without reference to or use of the other party's Confidential Information and which such independent development can be established using evidence that would be acceptable to a court of competent jurisdiction. Confidential Information does not include any personal information that may be included in the Data.

1.1.9 **"Customer Data."** As between Organization and S&S, all Customer Data will remain the sole and exclusive property of Organization. Organization is solely responsible for ensuring the accuracy, quality, integrity, reliability, appropriateness and right to view and use the Customer Data, and shall ensure that the Customer Data will not violate any applicable law or the terms of this Agreement. Organization consents to the storage of Customer Data in, and transfer of Customer Data into, the United States if Organization is located in the United States and in Canada if Organization is located in Canada.

1.1.10 **"Documentation"** means user guides, operating manuals, educational materials, product descriptions and specifications, technical manuals, supporting materials, and other information regarding the Software regardless of the media on which it is provided.

1.1.11 "**Embedded Third Party Software**" means components licensed by S&S for use in the Software (ex. Java, JasperSoft (Document Generation)).

1.1.12 "**Hosting Services**" means the services to be provided by or on behalf of S&S under this Agreement that includes hosting, monitoring, operating and maintaining the Software on hardware and related equipment and will permit Organization to use and access the Software via a method as determined solely by S&S. The Hosting Services shall also include storing all data entered and maintained by Users through use of the Hosting Services and the provision of updates, upgrades, and bug fixes related to support and maintenance of the Software.

1.1.13 **"License"** means the license rights granted to the Organization pursuant to Article II hereof and includes both a Concurrent User License and a Site License.

1.1.14 "**Oracle**" means Oracle America, Inc.

1.1.15 "**Personal Information**" shall have the same meaning as the term "personal data", "personally identifiable information (PII)" or the equivalent term under Applicable Data Protection Law.

1.1.16 **"Professional Service(s)"** means the one-time professional services to be performed by S&S to configure, set-up, and implement the Software at the hosting site in accordance with this Agreement and as more particularly set out in the Statement of Work (Attachment B).

1.1.17 **"Release"** means an Update and an Upgrade.

1.1.18 **"Service Provider Content"** means content such as software (including machine images), data, text, audio, video or images that S&S's service provider or any of its affiliates make available in connection with the Hosting Services to allow access to and use of the Hosting Services, including APIs; WSDLs; documentation; sample code; software libraries; command line tools; proofs of concept; templates; and other related technology (including any of the foregoing that are provided by our personnel). Service

Provider Content does not include the Hosting Services or other third-party software, data, text, audio, video or images made available to Organization in conjunction with the Hosting Services. Some Service Provider Content may be provided to Organization under a separate license, such as the Apache License, Version 2.0, or other open-source license.

1.1.19 **"Service Specifications"** means the following documents referenced in Schedule H-4, as applicable to the Hosting Services under this Agreement: (a) the Oracle Cloud Hosting and Delivery Policies, the Program Documentation, the Oracle service descriptions, and the Data Processing Agreement described in this Agreement; (b) Oracle's privacy policies; and (c) any other Oracle documents that are referenced in or incorporated into Your order. The following do not apply to any non-Cloud Oracle services, such as professional services: the Oracle Cloud Hosting and Delivery Policies, Program Documentation, and the Data Processing Agreement.

1.1.20 **"Site"** means solely at the production environment described in Schedule "B".

1.1.21 **"Site License"** means a license that restricts the Software such that it can reside in one production environment and a reasonable number of non-production environments.

1.1.22 **"Software"** means the software products that are listed in Schedule "B" and includes any Update(s) or Upgrade(s) that have been provided to Organization. Third Party Software is not included in the definition of Software.

1.1.23 **"Third Party Software"** means the third-party software product licensed to Organization by the applicable licensors as listed in Schedule "B" The terms and conditions for the Third-Party Software are listed in Schedule "E". Future Releases of the Software may require alternate third-party software to be licensed by Organization, which will be subject to a third-party license agreement between Organization and the relevant third-party software licensor. In such case Schedule "B" shall be amended to add any such third-party software and it shall be deemed "Third Party Software" for the purposes of this Agreement.

1.1.24 **"Update"** means any published changes, additions or corrections to the Software that primarily include a minor modification or enhancement to the Software related to a bug fix, minor additional functionality, or legislative changes. An Update is designated by a change in the right-most digit in the version number (for example, a change from X.1 to X.2).

1.1.25 **"Upgrade"** is a major overhaul of the Software which is a complete new published version of the Software that modifies, revises, or alters the Software and adds features, functionality or enhancements to such Software. An Upgrade is typically designated by a change in the number to the left of the decimal point in the version number (for example, a change from 1.X to 2.X).

1.1.26 **"User"** means any employee of Organization or any of Organization's agents who are authorized by S&S pursuant to this Agreement to have access to the Software.

Section 1.2 Currency

All references to currency in this Agreement and the related Schedules refer to U.S. Dollars.

Section 1.3 Schedules

The Schedules described below and appended to this Agreement shall be deemed to be integral parts of this Agreement and are incorporated herein by reference:

- Schedule "B" – Description of Software
- Schedule "B" – Statement of Work ("SOW")

- Fees & Payment Schedule
- Schedule "C" – Standard Support and Maintenance Guidelines
- Schedule "D" – Insurance Requirements
- Schedule "E" – Third Party Terms and Conditions
- Schedule "F" – Hosting Services Availability

ARTICLE II: SOFTWARE LICENSES

Section 2.1 Grant of Licenses

2.1.1 **S&S Software is licensed, not sold.** Software under this Agreement may be licensed perpetually or on a subscription basis, as indicated and designated on Schedule "B."

2.1.1.1 **Perpetual Licenses.** For Software licensed to Organization on a perpetual basis, as indicated on Schedule "B," and subject to the terms and conditions of this Agreement, including without limitation the payment of the License Fees, S&S hereby grants to the Organization a personal, non-exclusive, non-transferable and limited right and license to use the Software in object code format for the number of Concurrent Users specified in Schedule "B" (the "License"). This License does not apply to Third Party Software, which are licensed pursuant to their terms.

2.1.1.2 **Subscription Licenses.** For Software licensed to Organization on a subscription basis, as indicated in Schedule "B," and subject to the terms and conditions of this Agreement including without limitation the payment of the Subscription Fees on an ongoing basis, S&S hereby grants to the Organization a personal, non-exclusive, non-transferable and limited right and license to use the Software in object code format on the Hosting Site and for the number of Concurrent Users specified in Schedule "B" (the "License"). All Releases installed by Organization are subject to this License. This License and the other terms and conditions related to this License do not apply to Third Party Software except as this Subscription Agreement may state otherwise.

2.1.2 Any Software furnished by S&S in machine-readable form may be copied in whole or in part by Organization for use on the Organization's platform and operating system environment which is operating the Software ("Designated Computer System"), whether hosted or on premises. This environment can be accessed by Users can be from any internal or external computer terminal. To the extent that any temporary files associated with the Software are created during such use on such terminals, those temporary files are permitted under this License but only for such time that the temporary files are actually required. Organization agrees that the original copy of all Software furnished by S&S and all copies thereof made by Organization are and at all times remain the sole property of S&S.

2.1.3 Any License granted under this Agreement permits the Organization to: (i) use the Software for its reasonable business purposes including performance testing, disaster recovery, disaster testing, training, archival and backup, and (ii) use, copy and modify the Documentation for the purpose of creating and using training materials relating to the Software which may include flow diagrams, system operation schematics, and/or screen shots. Access to and use of the Software by independent contractors of the Organization shall be considered authorized use under this Section so long as any such independent contractors are bound by obligations of confidentiality and have been approved by S&S in its sole discretion in advance. The Organization shall defend, indemnify and hold harmless S&S from claims arising from

(i) all of the actions of and

(ii) any misuse or appropriation of the Software by any independent contractor.

2.1.4 The Organization may duplicate Documentation for permitted uses so long as all required proprietary markings are retained on all duplicated copies.

2.1.5 Software is licensed to the Organization on multiple levels. The Software is licensed "Current Account Volume" and "User License" basis as set forth in Schedule "B".

(i) Concurrent User License permits the Organization to use the Software on the Designated Computer System (including all environments such as training, disaster recovery, etc.) provided that the number of Users who may be simultaneously using the Software is limited to the number of Concurrent Users specified for such Software on Schedule "B". A User is further defined as anyone authorized by the Organization who is logged onto the Software, regardless of the type of interface (i.e. graphical user interface or browser user interface).

(ii) A Site License permits the Organization to use the Software on the Designated Computer System in one (1) production environment and a reasonable number of non-production environments for the purposes of disaster recovery, disaster testing, training, archival and backup. Organization requires a separate Site License for each production environment into which the Software or any portion thereof is read in machine-readable form.

Organization may purchase additional licenses to use the Software as necessary at S&S' then current prices and terms.

2.1.6 As between S&S and Organization, S&S reserves all rights, title and interest in and to the Software not expressly granted herein and the License specifically excludes all such reserved rights, title and interest.

2.1.7 Subject to the terms and conditions of this Agreement, including without limitation, payment by Organization of the Annual Hosting Fees, S&S hereby grants to Organization a personal, non-exclusive, non-transferable limited right, during any Term for which Annual Hosting Fees are paid, to allow Users to access and use the Hosting Services solely in connection with its use of the Software together with any further restrictions as detailed in this Agreement.

2.1.8 Subject to the terms and conditions of the Agreement, Organization grants to S&S and its service provider a world-wide, non-exclusive, royalty-free license to access the Customer Data for the purpose of performing the Hosting Services or as necessary to comply with the law or a binding order of a government body. Access to the Data shall only be by S&S's and its service provider's employees and/or subcontractors whose job function requires access. Except as specified in this Agreement, S&S may not access the Customer Data for any other purpose without the express written consent of Organization. Access to Customer Data by any outside party shall only be in accordance with the terms of this Agreement or where required by law or a binding order of a government body. Unless it would violate the law or a binding order of a government body, S&S will give Organization of any legal requirement or order referred to requiring such disclosure.

2.1.9 Organization grants to S&S a world-wide, non-exclusive, royalty-free license to aggregate or compile Customer Data with the customer data of other customers using the Hosting Services so long as such aggregation or compilation omits any data that would enable the identification of Customer, its clients or any individual, company or organization ("Aggregated Data"). S&S shall have a worldwide, perpetual, royalty-free license to use, modify, distribute and create derivative works based on such Aggregated Data, including all reports, statistics or analyses created or derived therefrom. Additionally, Organization grants S&S the right to access Data to provide feedback to Organization concerning its use of the Hosting Services.

Section 2.2 **Term**

2.2.1 **Term of License of Software.** This Agreement commences on the Effective Date.

2.2.1.1 For any Software License(s) identified on Schedule "B" as perpetually licensed and licensed pursuant to Article 2.1.1.1 is perpetual and of indefinite duration and shall continue to be in force unless terminated pursuant to the terms hereof.

2.2.1.2 For any Software identified on Schedule "B" as licensed on a subscription basis and licensed pursuant to Article 2.1.1.2, unless terminated earlier in accordance with the terms hereof, this Agreement shall commence on the Effective Date and shall continue for a period of one (1) year (the "Initial Term"). After the Initial Term, the Agreement shall be automatically renewed for successive one (1) year periods (each a "Renewal Term") subject to S&S's then-current price structure and any modifications to the terms and conditions of this Agreement made by S&S upon written notice to Organization to reflect S&S's then current version of this Agreement unless either party provides written notice to the other party of its intention not to renew within one hundred and twenty (120) days of the end of the then current term. The Initial Term and Renewal Term(s) shall collectively be referred to as the "Term". The License is subject to further restrictions as required under the Hosting Services provisions of this Agreement and the payment of any applicable fees as set forth in Schedule "B."

2.2.2 **Term of Services**. The term for delivery of Services hereunder shall be as set forth in any SOW appended hereto or entered into between the parties hereafter.

2.2.3 **Term of Support and Maintenance**. The initial term for services provided, pursuant to Article IV hereinafter, shall be for five (5) years beginning on the due date, as detailed in the SOW (Schedule "B"). The initial term commences on the Effective Date and remains in effect for five (5) years. Organization shall pay the then prevailing Support and Maintenance Fee in advance for each one-year term. S&S shall neither refund any Support and Maintenance Fees nor any Billable Fees if the Support and Maintenance provisions of this Agreement are terminated.

2.2.4 **Term of Hosting Services**. The initial term for hosting services shall be for one year beginning on the date fees are due, as detailed in the SOW (Schedule "B"). Thereafter, the Hosting Services license shall automatically renew annually, unless terminated by either party upon giving to the other not less than ninety (90) days' notice in writing prior to the end of the initial term or any subsequent anniversary of such date. Organization shall pay the then prevailing Annual Hosting Fees in advance for each such one-year term and where the notice of non-renewal has not been provided in accordance with these terms, the Organization is obliged to pay the Annual Hosting Fees for the then applicable one-year term. S&S shall not refund any Hosting Services Fees paid under any circumstances. Hosting services are licensed and provided during periods for which Annual Hosting Fees have been paid.

Section 2.3 **Restrictions on Use**

2.3.1 Organization shall not, and will not allow, direct or authorize (directly or indirectly) any third party to: (i) use the Software for any purpose other than in connection with Organization's primary business or operations; (ii) disassemble, decompile, reverse engineer, defeat license encryption mechanisms, or translate any part of the Software, or otherwise attempt to reconstruct or discover the source code of the Software except and only to the extent that applicable law expressly permits, despite this limitation; (iii) modify or create derivative works of the Software; (iv) rent, lease, lend, or use the Software for time-sharing or bureau use or to publish or host the Software for others to use; or (v) take any actions that would cause the Software to become subject to any open source or quasi-open source license agreement. Organization shall be wholly liable to S&S for any misuse of the Software.

2.3.2 The Software and related materials supplied by S&S are protected by copyright, trade secret, trademark, and other intellectual property laws. The Software may not be resold or licensed by Organization. Any rights not expressly granted herein are reserved. Organization may not obscure, remove or otherwise alter any copyright, trademark or other proprietary notices from the Software and related materials supplied by S&S.

2.3.3 **Restrictions Specific to Any Hosting Services Purchased**

a. Customer shall not, and shall not cause or permit others to:

(i) give away, rent, lease or otherwise sell, re-sell, sublicense, distribute, outsource, permit timesharing or service bureau us of, commercially exploit, make available the Hosting Services to any third party, or transfer the license rights granted under this Agreement or otherwise use the Hosting Services or the Software except as expressly permitted by this Agreement and the Information Systems Agreement without the prior written consent of S&S;

(ii) modify, create derivative works of, disassemble, reverse engineer, reproduce, republish, download, or copy the Documentation or any part of the Hosting Services (including data structures or similar materials produced by programs.

(iii) frame or mirror any part or content of the Hosting Services, other than framing on Customer's internal networks or otherwise for Customer's own internal business purposes.

(iv) transmit, upload, post, distribute, store or otherwise publish, through use of the Hosting Services, any data, material or information that: (A) contains a software virus, Trojan horse, worm or other harmful or deleterious computer code, files or programs that may adversely affect any hardware or software, or that intercepts or misappropriates any data or information; (B) is false, threatening, defamatory, libelous, harassing, profane, is an invasion of privacy or violates privacy rights, offensive, obscene or harmful, promotes bigotry, racism, hatred or harm; (C) infringes or otherwise violates any patent, copyright, trademark, trade secret or other intellectual property or proprietary right of any third-party; (D) violates any law, statute, ordinance or regulation; or (E) includes unsolicited bulk e-mails, junk mail, spam or chain letters, advertisements or solicitations;

(v) interfere with or disrupt services or networks connected to the system used to provide the Hosting Services and shall not attempt to gain unauthorized access to the Hosting Services or such services or networks connected to the system used to provide the Hosting Services.

(vi) (A) perform any benchmarking or availability testing of the Hosting Services or (B) disclose the results of using the Hosting Services for the purposes of monitoring its availability, benchmarking or competitive analysis to any third party.

(vii) perform or disclose any performance or vulnerability testing of the Hosting Services without S&S prior written approval, or perform or disclose network discovery, port and service identification, vulnerability scanning, password cracking or remote access testing of the Hosting Services.

(viii) use the Hosting Services to harass any person, cause damage or injury to any person or property, or to perform cyber currency or crypto currency mining; or

(ix) access or use the Hosting Services to build or support, directly or indirectly, products or services competitive to the Software, Hosting Services and Third-Party Components.

(b) In addition to its termination rights under in this Agreement, S&S may restrict or limit Customer's access to the Hosting Services if S&S determines that Customer has engaged in

(whether knowingly or unknowingly) any prohibited conduct described herein. In addition to and without limiting the foregoing, S&S reserves the right to refuse to post or to remove in whole or in part any information or materials provided or submitted by or on behalf of Customer in connection with its use of the Hosting Services that S&S determines, in its reasonable discretion, are either in violation of this Agreement or pose any risk of any kind or nature to S&S or its service providers' network, business or other Customers.

Section 2.4 Ownership of Software and Confidential Information

2.4.1 The Organization acknowledges that the Software contains proprietary information and Confidential Information that is the sole property of S&S.

2.4.2 The Organization will take reasonable care to safeguard the Software, and at least the same care as it takes to safeguard its own similar Confidential Information.

Section 2.5 Ownership and Disposition of Documents

2.5.1 The parties agree that no materials or documents are being created for Organization by S&S under this Agreement. All materials and documents which were developed or prepared by S&S for general use, and which are not the copyright of any other party or publicly available, including educational materials, remain the sole property of S&S.

2.5.2 Where the Organization requests custom materials or documents, the parties shall enter into a separate written agreement which shall include a duly executed statement of work and provisions for the license or ownership of said custom materials.

Section 2.6 Third Party Software

2.6.1 S&S may distribute to Organization Third Party Software which will be described as Third-Party Software in Schedule "B". Organization shall pay S&S for the Third-Party Software in the amount of the purchase price(s) listed on Schedule "B", which shall be due upon execution of the Agreement. Future Releases of the Software may require alternate third-party software to be licensed by Organization, which will be subject to a third-party license agreement between Organization and the relevant third-party software licensor. In such case Schedule "B" shall be amended in accordance with Section 6.08 to add any such third-party software and it shall be deemed "Third Party Software" for the purposes of this Agreement.

b. The Third-Party Software is licensed to Organization by the applicable licensor listed in Schedule "B" and subject to the terms and conditions of the applicable license agreement for such Third-Party Software. S&S makes no warranties, express or implied, with respect to the Third-Party Software, including, without limitation, their merchantability or fitness for a particular purpose and S&S accepts no liability of any kind whatsoever with respect to the Third-Party Software. Any warranty Organization has with respect to the Third-Party Software shall be solely provided by the Third-Party Software licensor except where this Agreement expressly states otherwise.

c. The parties acknowledge that the Software may also include Embedded Third-Party Software components licensed by S&S for use in the Software. The terms and conditions of this Agreement shall inure for such third party's benefit and the license of such Embedded Third-Party Software components are subject to the license and sublicense rights granted to S&S in connection with its use and distribution as part of the Software. The third-party software owner retains right, title and interest in such software, including statutory enforcement rights in the event of infringement.

d. Organization agrees that it shall not permit any third party to have access to the Third Party Software during the term of this Agreement and that the restrictions as set out in Section 2.3 and the confidentiality obligations set out herein shall equally apply to the Third Party Software, subject to any specific permissions that are provided in the license provided by the third party licensor to the Organization.

ARTICLE III: SERVICES

Section 3.1 S&S's Services

In order to achieve the Completion of Services, S&S agrees, subject to the terms and conditions of this Agreement, to perform the following services (the "Services") for the Organization in accordance with the relevant Statement of Work:

3.1.1 Oversee and implement the conversion from the Organization's existing software applications to S&S' Software.

3.1.2 Install the Software and perform necessary setup and configuration operations.

3.1.3 Provide training.

(i) In any training class exceeding ten (10) people, Organization may be assessed an additional charge for additional instructor(s).

(ii) Organization shall provide copies of the training manuals required for the training classes to each participant either by photocopy or electronic duplication. Each copy is subject to the restrictions and obligations contained in this Agreement.

(iii) On-line reference Documentation is delivered with each release. Organization may print or copy this Documentation solely for its internal use.

(iv) Cancellation of any on-site Services by Organization is allowed for any reason if done in writing more than fourteen (14) days in advance of such Services. Organization will be billed for any non-recoverable direct costs incurred by S&S that result from a cancellation by Organization with fourteen (14) days or less of scheduled on-site Services. Additionally, Organization hereby acknowledges that cancellation of on-site Services means that such on-site Services will be rescheduled as S&S's then current schedule permits. S&S is not responsible for any delay in Organization's project resulting from Organization's cancellation of Services. If upon S&S arrival, the Organization has not completed required tasks for such visit, then the Organization will be billed 100% of the on-site fee and scheduled on-site Services may be cancelled at S&S' discretion. If additional Services are required because the Organization was not adequately prepared, S&S will provide a Change Order to the Organization for said Services.

3.1.4 The Statement of Work describes in greater detail the Services, the method by which the Services shall be performed and other obligations on the part of the two parties. To the extent that the Statement of Work more explicitly details the Services or the obligations of a party, then those details shall prevail over any other document that is less explicit. Any warranties or representations on the part of S&S in the Statement of Work are not binding on S&S and are merely provided for informational purposes; the only warranties and representations provided by S&S in respect of the Services and this Agreement are found in Article V.

Section 3.2 Performance by S&S

3.2.1 Manner of Performance -- S&S shall perform the Services in an efficient, competent and timely manner and exercise reasonable care, skill and diligence in their performance.

3.2.2 S&S' Discretion -- S&S shall determine in its sole discretion the manner and means by which the Services shall be performed. S&S will consult with the Organization on its methodology, manner and means.

3.2.3 Conduct on Organization's Premises -- The Services shall be performed with the Organization's full cooperation as agreed, whether on the premises of the Organization or at an alternative location. When working on the Organization's premises, S&S personnel shall observe the Organization's administrative and ethics codes relating to the security, access or use of all or part of the Organization's premises and any of the Organization's property, including proprietary or confidential information.

3.2.4 Inquiries by Organization -- S&S shall respond expeditiously to any inquiries pertaining to this Agreement from the Organization.

3.2.5 Independence -- As an independent consultant, Organization retains S&S and its employees and agents on an independent contractor basis and not as an employee.

3.2.6 Coordination of Services -- S&S agrees to coordinate with Organization staff in the performance of Services and to be available for consultation at all reasonable times.

Section 3.3 Performance by Organization

3.3.1 Cooperation by Organization: The Organization acknowledges that the success and timeliness of the implementation process shall require the active participation and collaboration of the Organization and its staff and agrees to cooperate fully with S&S to achieve the Completion of Services expeditiously.

3.3.2 Project Manager: The Organization shall designate a project manager to facilitate the successful implementation.

3.3.3 Passwords. Organization agrees to comply with all S&S security policies and procedures as provided to it and amended from time to time. Organization and its Users shall be responsible for keeping any and all passwords, user ID's, log-in credentials and private keys assigned to its Users secret and confidential. User ID's, passwords, login-in credentials and private keys are for Organization's internal use only and Organization may not sell, transfer or sublicense them to any other entity or person except that Organization may disclose its private key to its agents performing work on its behalf. Organization agrees that it is and shall remain solely and completely liable for any communications or other uses that are made using Organization's or its Users' passwords and user ID's or log-in credentials and private keys, as well as any obligation that may result from such use. Organization agrees to notify S&S in writing if it believes that a password has been stolen or might otherwise be misused. Organization agrees to notify S&S immediately of any unauthorized use of any password or user ID or any other breach of security suspected by Organization.

3.3.4 Users. The Organization is responsible for: (i) the actions of Users using the Hosting Services in accordance with this Agreement; (ii) ensuring that Users agree to any further terms and conditions as may be provided by S&S from time to time for Users; and (iii) informing S&S of any information about Users' actions that may affect either the Hosting Services or third party data contained in or used by the Hosting Services, or S&S's ability to provide the Hosting Services as contemplated by this Agreement.

3.3.5 Compliance with Laws. Organization represents and warrants to S&S that it and its Users will at all times be in compliance with all applicable local, state, provincial, federal and international laws, rules and regulations including but not limited to, those laws regarding restrictions on exports, defamation, libel, harm to reputation, invasion of privacy, misuse or failure to protect personal information, violation of secrecy, confidentiality, unfair competition and other situations which could generate liability.

3.3.6 Additional Organization Obligations:

(i) For any on premises solutions, Organization shall install all Updates within a reasonable time after notification of their availability. However, any fix or correction designated as "critical" by S&S shall be implemented by Organization within thirty (30) days of such notification.

(ii) Organization shall notify S&S of suspected defects in any of the Software supplied by S&S. Organization shall provide, upon S&S request, additional data to reproduce the environment in which such defect occurred.

(iii) Organization shall allow the use of online diagnostics on the Software supplied to Organization as requested by S&S. Organization shall provide to S&S, at Organization's expense, access to the Designated Computer System via the Organization's firewall to communications software (e.g. PC Anywhere, WebEx, Web Demo).

(iv) Organization personnel shall be educated and trained in the proper use of the Software in accordance with applicable S&S manuals and instructions. If Organization's personnel are not properly trained as mutually determined by S&S and Organization, such personnel will be trained by S&S or Organization within fifteen (15) days. If S&S performs such training, it shall be compensated in accordance with this Agreement.

(v) Organization shall establish proper backup procedures necessary to replace critical Organizational data in the event of loss or damage to such data from any cause and despite anything in this Agreement or the Statement of Work to the contrary, S&S is absolved from any requirements regarding the backup of any data. Organization shall provide S&S with access to qualified functional or technical personnel to aid in diagnosis and to assist in repair of the Software in the event of error, defect or malfunction.

(vi) Organization shall not permit any third party to have direct access to or provide services in relation to the Software or any Third-Party Software without S&S' prior written consent.

(vii) Organization shall have the sole responsibility for:

(a) the performance of any tests it deems necessary prior to the use of the Software (for on premises and hosted solutions).

(b) assuring proper Designated Computer System installation, configuration, verification, audit controls and operating methods (on premises solutions only).

(c) implementing proper procedures to assure security and accuracy of input and output and restart and recovery in the event of malfunction (on premises solutions only); and

(d) timely upgrade and keeping current all third-party license releases and/or Software products to meet the requirements of the Software (on premises solutions only).

3.4.1 <u>Hosting Services</u>

3.4.1 S&S shall provide the facilities, equipment, and software to deliver the Hosting Services. S&S shall have the right to manage all resources used in providing the Hosting Services, as S&S deems appropriate.

3.4.2 S&S shall host and provide access to the Software Users, subject to scheduled periods of non-availability as described in Schedule "F".

3.4.3 S&S reserves the right to have commercially reasonable additional User security criteria that may be applied to Users prior to their ability to have access to the Software. S&S shall inform the Customer of such criteria, but S&S shall be free to implement such criteria at any time without prior written warning to the Customer and/or to Users. Where Users do not accept such and/or agree to such criteria, S&S reserves its rights to not grant to such Users access to

the Software. S&S reserves its rights to restrict access to the Software to Users for any violation of any additional terms and conditions to which such Users accept/agree to access the Software.

3.4.4 The Customer, not S&S, shall be responsible for creating and maintaining all User account information and for performing all other application-level system administration functions that are available within the Software.

3.4.5 S&S shall comply with the terms and conditions regarding access and use of Data as set forth in this Agreement.

3.4.6 Customer acknowledges that in order to provide the Hosting Services, Customer may be required to purchase access to Third Party Components. Customer further acknowledges that the availability of such Third-Party Components is based solely on the best information available to S&S and its service providers as of the Effective Date including third party representations and government regulations and is subject to change during the Term with little or no advance notice. If any necessary Third Party Components are determined by S&S to be unavailable as a result of changes to any third party availability, governmental regulations or other condition or circumstance outside of S&S's control, then (a) S&S shall not be in breach hereof or otherwise liable for any failure or inability to provide the Hosting Services as a result of such unavailability of any Third Party Components; and (b) may be required to change or replace the applicable Third Party Components or otherwise attempt to mitigate the impact of the such unavailability of Third Party Components.

3.4.7 Additional Terms and Conditions. Customer agrees and shall cause its Users to agree to be bound by and comply with the additional terms and conditions relating to Third Party Components, if any attached to this Agreement as Schedule "E", as may be amended from time to time by S&S, in its sole discretion, upon written notice to Customer.

3.4.8 The Service Specifications describe and govern the Hosting Services. During the Term, S&S may update the Hosting Services and Service Specifications to reflect changes in, among other things, laws, regulations, rules, technology, industry practices, patterns of system use, and availability of Third-Party Components. If any of the terms and conditions of S&S' agreement with its third-party service provider or any other provider or licensor of Third-Party Components are modified by such provider, S&S may modify the terms and conditions of this Agreement effective immediately upon written notice to Customer. If any such modification, change or replacement of the original Third Party Components includes a material price increase with respect to the Hosting Services enabled by such Third Party Components or materially reduces the level of performance, functionality, security or availability of the Hosting Services during the then current term, Customer may terminate this Agreement by providing written notice to S&S within thirty (30) days after Customer's receipt of notification of such material price increase or discovery of such impairment. For clarity, Customer and S&S shall agree in writing to any transition services requested by Customer and the associated transition services fees payable by Customer to S&S in the event of such termination.

3.4.9 (Oracle Programs. S&S, as authorized distributor of certain Oracle software offerings ("Oracle Programs"), provides the Oracle Programs set out in Schedule "E" to Customer for its use in accordance with the terms and conditions set out in the attached Schedule "E".

3.5 Responsibilities

3.5.1 Cooperation by Customer. The Customer acknowledges that the success and timeliness of the implementation process shall require the active participation and collaboration of the Customer and its staff and agrees to act reasonably and cooperate fully with the S&S to achieve the Completion of Services related to any Professional Services supplied by S&S. To enable S&S to provide effective Support Services, the Customer will establish secure remote access to S&S based on mutually agreed to remote access procedures.

3.5.2 Project Manager. The Customer shall appoint a project manager who shall work closely with S&S to facilitate the successful completion of the implementation process and who shall be responsible for supervising the staff of the Customer and their cooperation with and participation in such process during any Professional Services.

3.5.3 Customer Equipment. Customer agrees that it shall be responsible, at its sole expense, for providing all Internet access, including but not limited to obtaining, installing and maintaining all equipment, hardware, onsite network, Internet or direct telecommunications connections and software applications (e.g. web browser) at Customer's facilities required for Users to access and use the Hosted Services. S&S shall not be responsible for the operation of any Internet, network or other communication services. The Customer further acknowledges that the operation of the Hosting Services requires the Customer's and Users' hardware to be of sufficient quality, condition and repair, and the Customer agrees to and/or ensure that Users maintain their applicable hardware in the appropriate quality, condition and repair at the Customer's sole cost and expense. These requirements may also be necessary in order to facilitate the achievement of Completion of Services related to any Professional Services supplied by S&S.

3.5.4 Passwords. Customer agrees to comply with all S&S and its service providers' security policies and procedures as provided to it and amended from time to time. Customer and its Users shall be responsible for keeping any and all passwords and user IDs assigned to it its Users secret and confidential. Customer agrees that it is and shall remain solely and completely liable for any communications or other uses that are made using Customers or its Users' passwords and user ID's, as well as any obligation that may result from such use. Customer agrees to notify S&S in writing if it believes that a password has been stolen or might otherwise be misused. Customer agrees to notify S&S immediately of any unauthorized use of any password or user ID or any other breach of security suspected by Customer related to the Hosting Services.

3.5.5 Users. The Customer is responsible for: (i) the actions of Users using the Hosting Services in accordance with this Agreement; (ii) ensuring that Users agree to any further terms and conditions as may be provided by S&S from time to time for Users; and (iii) informing S&S of any information about Users' actions that may affected either the Software or third party data contained in the Software or used by the Hosting Services, or S&S's ability to provide Hosting Services as contemplated by this Agreement.

3.5.6 Compliance with Laws. Customer represents and warrants to S&S that it and its Users will at all times be in compliance with all applicable local, state, and federal and laws and regulations

including but not limited to those laws regarding defamation, libel, harm to reputation, privacy, security, data protection, misuse or failure to protect personal information, violation of secrecy, confidentiality, unfair competition, exports, and other situations which could generate liability.

3.5.7 Export. Export laws and regulations of the United States and any other relevant local export laws and regulations apply to the Hosting Services. Such export laws govern use of the Hosting Services (including technical data) and any Hosting Services deliverables provided under this Agreement, and Customer agrees to comply with all such export laws and regulations (including "deemed export" and "deemed re-export" regulations, restrictions on exports including the U.S. Export Administration Regulations, end-user, end use and destination restrictions by Canadian, U.S. and other governments related to S&S and its service provider's products, services and technologies). Customer agrees that no data, information, software programs and/or materials resulting from the Hosting Services (or direct product thereof) will be exported, directly or indirectly, in violation of export laws and regulations of the United States and any other relevant local export laws and regulations applicable to the Services (including technical data), or will be used for any purpose prohibited by these laws, including, without limitation, nuclear, chemical, or biological weapons proliferation, or development of missile technology. Customer acknowledges that the Hosting Services are designed with capabilities for Customer and its Users to access the Hosting Services without regard to geographic location and to transfer or otherwise move the Data between the Hosting Services and other locations such as User workstations. Customer is solely responsible for the authorization and management of User accounts across geographic locations, as well as export control and geographic transfer of the Data.

3.5.8 Managed Services. S&S shall provide the Managed Services in accordance with accepted industry standards. Please see the table below for additional information on other division of responsibilities:

Item	Notes	Responsibility
Power Supply	All data center infrastructure is backed by redundant power sources and maintain generator backups in case of widespread electrical outage.	**S&S**
Internet Feeds & Networking at the Hosting Facility	All data center infrastructure is backed by high-speed redundant network and internet connectivity.	**S&S**
Internet Feeds & Networking at the Customer Site	The Customer is responsible for monitoring and maintaining network and internet connectivity at the customer site relating to the hosted environment. For general usage, 10 to 20 Mbps upload/download dedicated to enQuesta throughput will meet or exceed the needs of most customers.	**Customer**
Disk Failover in Data Center	Multiple copies of data are stored redundantly across multiple storage servers with built-in repair mechanisms.	**S&S**
On-Premises (Customer) Network	Set-up and maintenance of all network components, including firewall configuration and network connectivity.	**Customer**
VPN Tunnels	For all hosted systems, an IPsec VPN tunnel is required to provide secure connectivity between the customer and the cloud hosting environment.	**Customer & S&S**

	The hosting environment tunnel is to be a co-managed; each party is responsible for notifying each other in the event of any changes that may require any type of coordination.	
Back-Ups	Daily backups occur each evening and are retained for 90 business days. The Recovery Point Objective (RPO) for enQuesta is to recover from the most recent of these evening backups to minimize data loss. Selecting the Data Guard option makes your Production RPO point-of-failure (a.k.a. real-time). RTO for enQuesta is 12 hours. Often recovery time is 4 hours or less, but this is dependent on the type of failure that may have occurred. Complete server and data backups are taken at a 24 hour our interval and replicated to a different Oracle data center facility should any type of backup ever be required. This back-up can be made available to the Customer at any point. Higher frequency back-ups may be requested at the then available S&S rates.	**S&S**
Disaster Recovery	Set-up, maintenance and restoration from backups – typical recovery time is less than 24 hours for enQuesta production – extreme cases can take up to 72 hours for enQuesta production. The number one priority will be enQuesta, once it's up, the same timelines would then apply to Capricorn & enQuesta Link.	**S&S**
Operating System Maintenance	S&S is responsible for the following Operating System Level changes: General O/S maintenance, O/S-level application configuration, and systematic semi-yearly O/S patching.	**S&S**
Database Maintenance	S&S is responsible for Database maintenance and tuning as required by the enQuesta Software. Please note that this does not include manual data manipulation for ad-hoc billable projects or corrective measures in the case of Customer error.	**S&S**
Workstations	The Customer is responsible for the management and maintenance of all workstations, PCs, devices used to connect to the enQuesta Software.	**Customer**
Any Hardware On-Premises (e.g Kiosks, Handhelds Scanners, etc.)	The Customer is responsible for the configuration, management and maintenance of any additional hardware installed on-premises.	**Customer**
Printers	Customer is responsible for all printer configuration and support of printers (beyond the six (6) that are included as part of the original contract).	**Customer**
System Monitoring	Alerting of critical instances: Tablespace Capacity, JBOSS, Back-Up Completed/Failed, Hosting Services Up/Down, Web Portal Availability (Production Instance Only)	**S&S**
Other	The Customer is responsible for enQuesta user maintenance and general system administration. The Customer is also responsible for any file or report import/export to non-enQuesta servers.	**Customer**

3.5.9 (i) Data Security. Customer acknowledges and agrees that use of or connection to the Internet is inherently insecure and provides opportunity for unauthorized access by a third party to Customer's and its Users' (as well as S&S's and its service providers') computer systems, networks and any and all information stored therein. Customer is solely responsible for ensuring that (i) Customer's computer systems are secure and protected from unwanted interference (such as "hackers" and viruses), (ii) all transmissions are screened for viruses or

other harmful code prior to transmission to S&S's and/or its service providers' servers; and (iii) Data is encrypted. Some content may be subject to governmental regulations or may require security measures beyond those specified by S&S for an offering. Customer remains solely responsible for Customer's regulatory compliance in connection with Customer and its Users' use of the Hosting Services. Customer is responsible for making S&S aware of any technical requirements that result from Customer or its Users' regulatory obligations prior to entering into this Agreement. S&S will cooperate with Customer's efforts to determine whether use of the standard S&S Hosting Services offering is consistent with those requirements. Additional fees may apply to any additional work performed by S&S and its service provider or changes to the Hosting Services. Customer will not input or provide such content unless S&S has first agreed in writing to implement additional required security measures. By using the Hosting Services, Customer acknowledges that it meets Customer's requirements and Data (including Personal Information) processing instructions. Customer is solely responsible for any security vulnerabilities, and the consequences of such vulnerabilities, arising from the Data, including any viruses, Trojan horses, worms or other harmful programming routines contained in the Data, and any use by Customer or its Users of the Hosting Services in a manner that is inconsistent with the terms of this Agreement. To the extent that Customer discloses or transmits the Data to a third party, S&S and its service providers are not responsible for the security, integrity or confidentiality of such content outside of S&S' and its service providers' control.

3.5.10 Unless otherwise agreed to by S&S in in this Agreement, the Data may not include any sensitive or special data that imposes specific security or data protection obligations on S&S and its service provider in addition to or different from those specified in the Service Specifications. If available for the Hosting Services, Customer may purchase additional service from S&S designed to address specific data security or data protection requirements applicable to such sensitive or special data Customer seeks to include in its Data.

3.5.11 S&S AND ITS SERVICE PROVIDER DO NOT GUARANTEE THE PRIVACY, SECURITY, AUTHENTICITY, AND NON-CORRUPTION OF ANY INFORMATION TRANSMITTED OR STORED IN ANY SYSTEM CONNECTED TO THE INTERNET. S&S AND ITS SERVICE PROVIDER SHALL NOT BE RESPONSIBLE FOR ANY ADVERSE CONSEQUENCES WHATSOEVER OF CUSTOMER'S OR ITS USERS' CONNECTION TO OR USE OF THE INTERNET, AND S&S AND ITS SERVICE PROVIDER SHALL NOT BE RESPONSIBLE FOR ANY USE BY CUSTOMER OR ANY USER OF CUSTOMER'S INTERNET CONNECTION IN VIOLATION OF ANY LAW, RULE OR REGULATION.

3.5.12 Should the unlikely event of any type of unsolicited activity occur (e.g. even if it's due to suspicious activities by a Customer's employee) S&S reserves the right to immediately block off entry to all parties until root cause is assessed via all activity logs (network, database, and application). The Customer also reserves the right to ask S&S to turn off access to all at any point, in the unlikely event that this should be deemed required.

3.5.13 Current datacenter infrastructure standards are available at the links set out in Schedule "E".

ARTICLE IV: SUPPORT AND MAINTENANCE

Section 4.1 **Delivery of Support Services**

4.1.1 Method of Delivery. S&S shall provide software support via telephone and electronic transmission, with site visits only when necessary. The support services will be provided during the hours of operation as described in Schedule "C" hereto, effective on the date support services fees are due, as detailed in the SOW (Schedule "B"). Such services may be modified at S&S' sole discretion. Organization will establish auto remote access procedures compatible with S&S' current practices.

4.1.2 Title to and ownership of all proprietary rights in the Releases and all related proprietary information supplied by S&S in providing the services pursuant to this Support and Maintenance Agreement shall at all times remain with S&S, and Organization shall acquire no proprietary rights by virtue of this Support and Maintenance Agreement.

4.1.3 Source Code Escrow. S&S maintains an escrow agreement with a third party under which is placed the source code for each major release of its Software. Organization may be added as a beneficiary to the escrow agreement by completing a standard beneficiary enrollment form and paying the annual beneficiary fee. Organization will be responsible for maintaining your ongoing status as a beneficiary, including payment of the then-current annual beneficiary fees. Release of source code for the S&S Software is strictly governed by the terms of the escrow agreement. No escrow in Third Party Software is provided.

4.1.4 S&S shall have the right to terminate ongoing Support and Maintenance pursuant to this Agreement immediately if:

i) Organization attempts to assign this Support and Maintenance Agreement or any of its rights hereunder, or undergoes a Reorganization, without complying with this Agreement; or

ii) Organization has not paid an invoice within ninety (90) days of the start of a renewal term.

ARTICLE V: REPRESENTATIONS AND WARRANTIES

Section 5.01 Warranty of Performance

5.1.1 Software Warranty. The Software will substantially perform as described in the Documentation for a period of one hundred twenty (120) days from the Completion of Services if the Software is used in accordance with the Documentation, the terms of this Agreement and where the Organization has the Required Programs, and the hardware meets the requirements. The Organization's sole recourse in the event the Software does not conform to the Documentation is the repair and replacement of the Software.

5.1.2 Hosting Services Warranty. During the duration of this Agreement, Provider warrants to Organization that the Hosting Services shall be performed at the level and shall reasonably meet the requirements as stated in any Provider manuals and other documentation provided. Organization's sole recourse in the event the Hosting Services do not conform to the warranty provided is for the right to terminate those Hosting Services upon providing thirty (30) days' written notice to Provider.

5.1.3 In the event an error is discovered in the Software outside the warranty period and the error can be reproduced by S&S, provided Organization has ongoing Support and Maintenance with S&S pursuant to Article IV of this Agreement, S&S will make reasonable commercial efforts to provide Organization with a correction or suitable workaround in accordance with the terms of Article IV. S&S reserves the right to correct any defects about which it is made aware and to produce in its sole discretion Releases at a time of S&S' own choosing.

5.1.4 S&S warrants that services performed pursuant to this Agreement will be performed in a professional and diligent manner by personnel who are competent in performing their individual tasks.

Section 5.02 Exclusions to Warranty

S&S shall not be liable for any breach of the foregoing warranties which results from causes beyond the reasonable control of S&S, including:

5.2.1 where the installation, integration, modification or enhancement of the Software was not done by S&S or its authorized agent, or where Organization has taken any action which is prohibited by the Documentation or this Agreement.

5.2.2 any use or combination of the Software with any software, equipment or services not supplied by or on behalf of S&S.

5.2.3 user error, or other use of the Software in a manner or in an operating environment for which it was not intended or other than as permitted herein.

5.2.4 Organization's failure to install a new Update necessary to cure an error or bug, for security or legislative compliance purposes or for such other reasons as S&S may determine in its sole discretion: or

5.2.5 Any other event of force majeure.

Section 5.03 No Other Warranties

TO THE GREATEST EXTENT PERMITTED BY LAW, THE SOFTWARE IS LICENSED AND ALL OTHER MATERIALS AND SERVICES ARE PROVIDED TO THE ORGANIZATION "AS IS" AND THERE ARE NO WARRANTIES, REPRESENTATIONS OR CONDITIONS, EXPRESSED OR IMPLIED, WRITTEN OR ORAL, ARISING BY STATUTE, OPERATION OF LAW, COURSE OF DEALING, USAGE OF TRADE OR OTHERWISE, REGARDING THEM OR ANY OTHER PRODUCT, SERVICE OR MATERIAL PROVIDED HEREUNDER OR IN CONNECTION HEREWITH.

S&S, ITS LICENSORS AND SUPPLIERS DISCLAIM ANY IMPLIED WARRANTIES OR CONDITIONS REGARDING THE SOFTWARE AND ANY OTHER PRODUCTS, SERVICES AND MATERIALS PROVIDED HEREUNDER OR IN CONNECTION HEREWITH, INCLUDING, BUT NOT LIMITED TO, WARRANTIES OF MERCHANTABLE QUALITY, MERCHANTABILITY, DURABILITY, FITNESS FOR A PARTICULAR PURPOSE, TITLE OR NON-INFRINGEMENT.

S&S DOES NOT REPRESENT OR WARRANT THAT THE SOFTWARE SHALL OPERATE ERROR FREE OR IN THE COMBINATIONS SELECTED, THAT IT SHALL MEET ANY OR ALL OF THE ORGANIZATION'S PARTICULAR REQUIREMENTS, OR THAT ALL ERRORS OR DEFECTS IN THE SOFTWARE CAN BE FOUND OR CORRECTED.

WITHOUT LIMITING THE FOREGOING, S&S DOES NOT MAKE ANY REPRESENTATIONS OR WARRANTIES WHATSOEVER WITH REGARD TO PRODUCTS OR SERVICES FROM THIRD PARTIES (INCLUDING WITHOUT LIMITATION THE THIRD PARTY COMPONENTS, THE HARDWARE, THE OPERATION OF THE INTERNET, NETWORK OR OTHER COMMUNICATION SERVICES) AND ASSUMES NO RESPONSIBILITY OR LIABILITY WITH RESPECT TO THE FOREGOING OR THE APPROPRIATENESS OF YOUR DATA MANAGEMENT SYSTEM OR THE ACCURACY OF DATA CONTAINED IN SUCH SYSTEM. S&S AND ITS SERVICE PROVIDER DO NOT GUARANTEE THE PRIVACY, SECURITY, AUTHENTICITY, AND NON-CORRUPTION OF ANY INFORMATION TRANSMITTED OR STORED IN ANY SYSTEM CONNECTED TO THE INTERNET.

NO AGREEMENTS VARYING OR EXTENDING ANY EXPRESS WARRANTIES SET FORTH IN THIS AGREEMENT SHALL BE BINDING ON EITHER PARTY UNLESS IN WRITING or SIGNED BY AN AUTHORIZED SIGNING OFFICER OF S&S.

Section 5.4 Required Programs and Hardware

5.4.1 The Organization acknowledges that the use of the Software may require that the Organization obtain and install additional required software programs (the **"Required Programs"**), as detailed in the attached Schedule "B". The Organization agrees that the acquisition of the Required Programs (including the cost for future updates) shall be at its sole cost and that the cost thereof is not included in the fees herein.

5.4.2 Organization's hardware shall be maintained in sufficient quality, condition and repair at Organization's sole cost and expense to support the Software licensed and supported herein. If S&S determines that Organization's hardware is not of sufficient quality, condition and repair, S&S shall so notify Organization, and Organization will use reasonable efforts to remedy any hardware deficiencies within thirty (30) days.

5.4.3 Organization shall provide no less than one hundred and twenty (120) days' notice where the Organization anticipates changing any of the third-party software or hardware products in use on the Designated Computer System so that S&S may assess whether the Software will function with the different software or hardware. Where S&S determines that the Software may not function with the alternative software or hardware then any upgrade by Organization to the software or hardware will be at Organization's sole risk. S&S and Organization may be required to enter into a Statement of Work document subject to additional fees in order to make this determination.

ARTICLE VI: FEES AND PAYMENT

Section 6.1 Fees and Payments for Licenses

6.1.1 The Organization agrees to pay S&S total License fees detailed in Schedule "B" (the "License Fees"), which is not inclusive of any applicable taxes. The Organization shall be responsible for the payment of any applicable duties and sales/consumption taxes. The fee structure and payment schedule are outlined in the attached Schedule "B". The License is subject to the full payment of the License fees. All payments for License fees are non-refundable.

6.1.2 Except for any aspect of the License Fee, which is payable on the Effective Date, during the term of this Agreement, Organization shall have thirty (30) days after the date outlined in the payment schedule in Schedule "B" to pay S&S the applicable License Fee.

6.1.3 Prices are for quoted products only. However, to the extent permissible under governing law and Organization's regulations and practices, this Agreement may function as a cooperative purchasing agreement for future Organization purchases. Pricing for future and additional purchased products or pursuant to any cooperative purchasing agreement will be at S&S then-current pricing and not based upon pricing in this Agreement.

Section 6.2 Fees and Payments for Services and Subscription Licenses

6.2.1 The Organization agrees to pay S&S total fees as delineated in the SOW (Schedule "B"). The fee structure and payment schedule for Services are outlined in the SOW (Schedule "B"). All payments for Services are non-refundable.

6.2.2 Annual Subscription for Subscription Licenses

6.2.1.1 The Organization agrees to pay S&S the Annual Subscription Fees, which are not inclusive of any applicable taxes. The Organization shall be responsible for the payment of any applicable duties and sales/consumption taxes. The fee structure and payment schedule are outlined in the SOW (Schedule "B"). The License is subject to the full payment of the Annual Subscription Fees in accordance with the payment

terms set out in SOW (Schedule "B").

6.2.1.2 The Annual Subscription Fee will be billed annually in advance beginning as set forth in the SOW (Schedule "B") and thereafter on the anniversary or on an alternative date mutually agreed to by both parties. If the Organization would like to match the annual invoicing of the Annual Subscription Fee to its fiscal year or any other period it may request, then S&S will issue a prorated invoice for the portion of the year remaining during the initial term. S&S may change the Annual Maintenance Fee from time to time in relation to each renewal term, but Organization shall only be billed once per year.

6.2.2 The Organization agrees to reimburse S&S for its travel, lodging, per diem and other out of pocket expenses as set out in the attachment to the SOW (Schedule "B").

6.2.3 During the term of this Agreement, S&S shall, from time to time, deliver invoices to Organization. Each invoice is due and payable upon receipt.

6.2.4 In the event Organization fails to pay all or any portion of an invoice on or before ninety (90) days after the date it becomes due, in addition to all other remedies S&S has under this Agreement or otherwise, S&S shall have the option to suspend or terminate all Services under this Agreement. Suspension or termination of any such Services shall not relieve the Organization of its obligation to pay its outstanding invoices, including any late charges.

6.2.5 S&S shall be responsible for paying all taxes, fees, assessments and premiums of any kind payable to its employees and operations. Any tax S&S may be required to collect or pay upon the delivery of the Services described in this Agreement shall be paid by Organization and are excluded from the prices listed in the SOW (Schedule "B") and such sums (including the payment of the taxes) shall be payable upon receipt of invoice. Organization shall be responsible for the payment of any applicable duties and sales/consumption taxes. Organization warrants that there are no additional county/city/municipal style taxes that apply to any of the Services, Support Services or Licenses or that are in relation to income taxes payable by S&S employees.

6.2.6 Change Orders. For proposed changes to the Services defined by this Agreement that do not materially impact the scope of either party's work effort required under this Agreement, the parties will cooperate in good faith to execute Change Orders in respect thereof and will not unreasonably withhold approval of such proposed changes. If either party causes or requests a change that, in the reasonable opinion of the other party, materially impacts the scope of the parties' work effort required under this Agreement, such as, but not limited to, changes in the allocation of the resources of the Organization and of S&S applied to a task, changes in completion schedules for individual tasks or for overall implementation, and changes in staffing that require a party to provide additional work hours, the other party may propose a change to cover the additional work effort required of it. Approval of any such proposed changes will not be unreasonably withheld (it being acknowledged that any such material changes may require modifications to the consideration paid, timelines governing, and the Services), and any disputes regarding changes shall be handled initially by discussions between the parties which will be convened in good faith by the parties to resolve any such matters in dispute. A sample Change Order is presented in Schedule "C".

Section 6.3 **Fees and Payments for Support and Maintenance and Any Hosting Services**

6.3.1 In consideration for the support services provided hereunder, Organization shall pay the "Support and Maintenance Fee" and the "Annual Hosting Fees" as detailed in the SOW (Schedule "B"). The Support and Maintenance and Annual Hosting Fees will be billed annually in advance on the due date, as detailed in the SOW (Schedule "B"), and thereafter on the anniversary of this date or on an alternative

date mutually agreed to by both parties. If the Organization would like to match the annual invoicing of the Support and Maintenance Fee and Annual Hosting Fees to its fiscal year or any other period it may request, then S&S will issue a prorated invoice for the portion of the year remaining during the initial term. S&S may change the Support and Maintenance Fee and Hosting Services Fees from time to time in relation to each renewal term, but Organization shall only be billed once per year.

6.3.2 In addition to the Support and Maintenance Fee, Organization shall reimburse S&S for its direct expenses in providing support services ("Billable Fees") pursuant to this Agreement which include:

(i) its direct travel expenses which are excluded from the total fees amount described in the Statement of Work, including, but not limited to hotel, airfare, car rental, tolls, parking and airline and travel agent fees.

(ii) courier services, photocopying, faxing and reproduction, all reasonable travel costs (hotel and airfare) including a travel time rate of $75.00 per hour.

(iii) a per diem rate of $70.00 for weekdays and a $140.00 for weekends and statutory holidays that includes all meal, food and telecommunications expenses (no receipts will be provided).

(iv) a mileage charge based on the current U.S. Internal Revenue Service recommended rate per mile, long distance telephone calls; and

(v) all other reasonable expenses incurred in the performance of S&S's duties including courier services and documentation copying or production.

S&S may update its reimbursement policies and rates related to the Billable Fees from time to time, in which case such updated policies shall apply for purposes of this Agreement, provided that such updated reimbursement policies must generally apply to all clients of S&S.

6.3.3 S&S shall supply all Upgrades to Organization at no additional charge other than the payment of ongoing Support and Maintenance Fee. Upgrades may require additional services to be performed by S&S outside of the scope of those services provided by S&S, including additional training not covered by this Agreement and professional services for the installation and implementation of the Upgrade that will be subject to the S&S then-prevailing policies, terms and Billable Fees related to pricing and hourly rates. All such services shall be performed subject to a newly negotiated Statement of Work that will be subject to the terms of this Agreement.

6.3.4 All Updates of the Software and all those services listed in the Statement of Work which are included as part of Organization's Software support will be made available to Organization at no additional charge other than the payment of the Support and Maintenance Fee.

6.3.5 All payments for Support and Maintenance and Annual Hosting Fees shall be net of any taxes, tariffs or other governmental charges. S&S shall be responsible for paying all taxes, fees, assessments and premiums of any kind payable to its employees and operations. Any tax S&S may be required to collect or pay upon the sale, use or delivery of support and maintenance services shall be paid by the Organization and such sums shall be due and payable to S&S upon receipt of an invoice, therefore. Any taxes levied in relation to the services required for a Release shall be paid by the Organization.

ARTICLE VII: REMEDIES, LIABILITY AND INDEMNITY

Section 7.1 Remedies and Liability

7.1.1 Termination of this Agreement shall not affect any right of action of either party arising from anything which was done or not done prior to said termination.

7.1.2 The Organization and S&S recognize that circumstances may arise entitling the Organization to damages for breach or other fault on the part of S&S arising from this Agreement. The parties agree that in all such circumstances the Organization's remedies and S&S' liabilities will be limited as set forth below and

that these provisions will survive notwithstanding the termination or other discharge of the obligations of the parties under this Agreement.

(i) EXCEPT FOR DAMAGES ARISING OUT OF S&S'S INTELLECTUAL PROPERTY INDEMNIFICATION OBLIGATIONS SET FORTH IN SECTION 7.3, BOTH PARTIES AGREE THAT S&S' ENTIRE LIABILITY (UNDER CONTRACT OR IN TORT INCLUDING FUNDAMENTAL BREACH, NEGLIGENCE, STRICT LIABILITY OR OTHERWISE), IF ANY, FOR ANY DAMAGES RELATING TO OR ARISING UNDER THIS AGREEMENT SHALL NOT EXCEED IN THE AGGREGATE FEES PAID TO S&S BY THE ORGANIZATION UNDER THIS AGREEMENT IN THE TWELVE (12) MONTH PERIOD PRIOR TO THE TIME THAT THE CLAIM AROSE.

(ii) IN ADDITION TO THE FOREGOING, S&S SHALL NOT BE LIABLE FOR ANY CONSEQUENTIAL, INCIDENTAL, INDIRECT, EXEMPLARY, PUNITIVE, OR SPECIAL DAMAGES WHATSOEVER, INCLUDING BUT NOT LIMITED TO LOST REVENUE OR LOSS OF PROFITS, LOSS OF BUSINESS, LOSS OF DATA, FAILURE TO REALIZE EXPECTED SAVINGS, OR COST OF SUBSTITUTE GOODS OR SERVICES ARISING OUT OF OR IN CONNECTION WITH THIS AGREEMENT, EVEN IF ORGANIZATION HAS BEEN ADVISED OF THE LIKELIHOOD OF THE OCCURRENCE OF SUCH LOSS OR DAMAGES AND NOTWITHSTANDING ANY FAILURE OF ESSENTIAL PURPOSE OF ANY LIMITED REMEDY.

(iii) CLAUSES (i) AND (ii) SHALL APPLY IN RESPECT OF ANY CLAIM, DEMAND OR ACTION BY A PARTY IRRESPECTIVE OF THE NATURE OF THE CAUSE OF ACTION UNDERLYING SUCH CLAIM, DEMAND OR ACTION, INCLUDING, BUT NOT LIMITED TO, BREACH OF CONTRACT, RESCISSION OF CONTRACT, OR TORT.

Section 7.2 Intent

The parties hereby confirm that the waivers and disclaimers of liability, releases from liability, limitations and apportionments of liability, and exclusive remedy provisions expressed throughout this Agreement shall apply even in the event of default, negligence (in whole or in part), strict liability or breach of contract of the person released or whose liability is waived, disclaimed, limited, apportioned or fixed by such remedy provision, and shall extend to such person's affiliates and to its shareholders, directors, officers, employees and affiliates.

Section 7.3 Intellectual Property Indemnity

7.3.1 In the event there is a third party claim against Organization alleging that Organization's use of the Software in accordance with this Agreement constitutes an infringement of a Canadian or United States' patent, copyright, trademark or trade secret or other intellectual property that is valid and enforceable in Organization's jurisdiction, S&S shall, at its expense, defend and indemnify Organization and pay any final judgment (including all damages awarded against Organization) against Organization or settlement agreed to by S&S on Organization's behalf. This indemnity is only effective where (i) Organization has not made any admissions or begun settlement negotiations either prior to or after providing notice to S&S of the applicable claim except with S&S' prior written consent, (ii) S&S has sole control of the defense of any claim or proceeding and all negotiations for its compromise or settlement; (iii) Organization assists and provides information to S&S throughout the action or proceeding, and (iv) Organization has not modified the Software in any manner whatsoever except with the prior written consent of S&S.

7.3.2 S&S' liability for any claims under this Section 7.3 shall be reduced to the extent such claim arises from.

(i) alterations or modifications to the Software by Organization or a third party in any manner whatsoever except with the prior written consent of S&S.

(ii) combination, integration or use of the Software with software, hardware or other materials not approved by S&S where such claim would not have arisen but for such combination, integration or use.
(iii) use of the Software other than in compliance with this Agreement.
(iv) compliance with the Organization's written instructions or specifications; or
(v) use of the Software after notice from S&S that it should cease due to possible infringement.

7.3.3 Any breach by Organization of its covenants under this Section 7.3 shall nullify this indemnity but not the sole right of S&S to have full and complete authority of the defense to defend such claim or proceeding and of all negotiations related therewith and the settlement thereof. In the event that the Organization's use of the Software is finally held to be infringing or S&S deems that it may be held to be infringing, Organization agrees that the only remedy available to it is that S&S shall be, at S&S' election, for S&S to: (1) procure for the Organization the right to continue use of the Software; or (2) modify or replace the Software so that it becomes non-infringing.

7.3.4 The foregoing states S&S' entire liability, and the Organization's exclusive remedy, with respect to any claims of infringement of any copyright, patent, trademark, trade secret or other intellectual property and property interest rights relating to the Software, or any part thereof or use thereof.

7.3.5 Organization may, at Organization's sole cost and expense, retain counsel of its own choosing who shall be permitted to attend all settlement conferences and hearings or other court appearances related to the proceeding.

7.3.6 The indemnity provisions of this Section 7.3 shall not apply to Third Party Software and S&S shall have the right to substitute the licensor of the Third Party Software to perform S&S' obligations hereunder and the Organization agrees to release S&S from any obligations related to such Third Party Software.

Section 7.4 Remedies

Where remedies are expressly afforded by this Agreement, such remedies are intended by the parties to be the sole and exclusive remedies of the Organization for liabilities of S&S arising out of or in connection with this Agreement, notwithstanding any remedy otherwise available at law or in equity.

ARTICLE VIII: GENERAL

Section 8.1 Confidentiality

8.1.1 Duty Owed to the Organization: S&S acknowledges that it may receive information from the Organization or otherwise in connection with this Agreement. Except for information in the public domain, unless such information falls into the public domain by disclosure or other acts of the Organization or through the fault of the Organization, S&S agrees:
(i) to maintain this information in confidence.
(ii) not to use this information other than in the course of this Agreement.
(iii) not to disclose or release such information.
(iv) not to disclose or release such information to any third person without the prior written consent of the Organization, except for authorized employees or agents of S&S; and
(v) to take all reasonable actions, whether by instruction, agreement or otherwise, to ensure that third persons with access to the information under the direction or control or in any contractual privity with S&S, do not disclose or use, directly or indirectly, for any purpose other than for performing the Services during or after the term of this Agreement, any material or information, including the information, without first obtaining the written consent of the Organization.

8.1.2 Duty Owed to S&S: The parties agree that if the Organization breaches any term of Section 2.3 or Section 2.4 then S&S shall have the right to terminate this Agreement and the grant of Licenses herein forthwith without giving notice as set forth in Section 8.2.1.

Section 8.2 Termination

8.2.1 If either party should fail to comply with its obligations under this Agreement, the other party must notify the breaching party in writing of such default (a "Default Notice"). Upon receipt of a Default Notice, the breaching party must correct the default at no additional cost to the other party or issue a written notice of its own disputing the alleged default, in either case within thirty (30) days immediately following receipt of a Default Notice. If the breaching party fails to

(i) issue a written notice disputing the alleged default within such thirty (30) day period; or

(ii) to correct the default, or issue a notice disputing the alleged default, in either case within ninety (90) days following receipt of the Default Notice, this will constitute an "Event of Default", and the other party may terminate this Agreement effective upon written notice to the other party to that effect.

8.2.2 If Organization has failed to pay the license fees in accordance with Article VI, then S&S shall have the right to terminate the license rights granted herein and this Agreement effective immediately upon written notice to Organization.

8.2.3 Either party may terminate this Agreement effective immediately upon written notice to the other party if the other party:

(i) becomes insolvent.

(ii) becomes the subject of any proceeding under any bankruptcy, insolvency or liquidation law, whether domestic or foreign, and whether voluntary or involuntary, which is not resolved favorably to the subject party within ninety (90) days of commencement thereof; or

(iii) becomes subject to property seizure under court order, court injunction or other court order which has a material adverse effect on its ability to perform hereunder.

Section 8.3 Procedure on Termination

8.3.1 If this Agreement is terminated prior to the Completion of Services or for products licensed on a subscription basis, then within thirty (30) days following such termination, the Organization shall either return to S&S or delete the Software from all of its locations (except as required under any statute related to retention requirements) and shall certify in writing that all of the Organization's copies of the Software have either been returned to S&S or deleted.

8.3.2 If this Agreement is terminated following the Completion of Services, then the Organization may retain the copy of the Software in its possession as of the Completion of Services. Notwithstanding the foregoing, the Organization will remain subject to the obligations imposed upon it pursuant to this Agreement with respect to the Software, including, but not limited to, such obligations relating to ownership of the Software and confidentiality and all of the restrictions on the Organization as set out in Article II.

8.3.3 All warranties related to the Software terminate upon the termination of this Agreement.

8.3.5 Termination Provisions Specific to Hosting Services. In the event of termination or expiration of Hosting Services pursuant this Agreement:

a. All rights to use the Hosting Services granted to S&S in this Agreement shall immediately terminate and Organization will immediately cease to perform or provide said Hosting Services.

b. Organization will pay all amounts due under this Agreement for the Hosting Services up to and through the date of termination and all costs reasonably incurred in collecting the amounts due to S&S (including court costs, attorney fees, and repossession charges to the extent not prohibited by law).

c. Conditional upon Organization's payment of all Fees that are due to S&S, S&S will furnish the S&S with a copy of Organization's Customer Data in a format to be mutually agreed upon between the parties in writing (typically a .csv file). The anticipated time to provide a copy of the Customer Data are one to two days and will be billed at S&S's then current daily rate. Upon receipt of notice from S&S confirming receipt of the Customer Data, S&S shall destroy all copies of the Customer Data and delete all Customer Data on the database and an Officer of S&S shall certify the destruction and deletion to the Organization. Subject to any legal requirement that S&S must retain a copy of the Customer Data, S&S shall not delete the Customer Data for 90 days from the date of termination except: (i) where S&S has provided the Customer Data to S&S pursuant to this Subsection; or (ii) where it has received written instructions from Organization to delete the Data. Following 90 days from the date of termination if Organization has not communicated with S&S regarding the Customer Data, S&S shall have the right to delete all Customer Data at any time as either required by law or as determined by S&S in its sole discretion. Notwithstanding the foregoing, S&S shall be permitted to delete all Customer Data without providing notification to Organization and S&S shall not be required to adhere to the time frames detailed above where S&S is required by law to delete such Customer Data.

Section 8.4 Mediation

The parties agree to submit any claim, controversy or dispute arising out of or relating to this Agreement or the relationship created by this Agreement to non-binding mediation before bringing a claim, controversy or dispute in a court or before any other tribunal. The mediation is to be conducted by either an individual mediator or a mediator appointed by mediation services mutually agreeable to the parties. The mediation shall take place at a time and location which is also mutually agreeable; provided; however, in no event shall the mediation occur later than ninety (90) days after either party notifies the other of its desire to have a dispute be placed before a mediator. Such mediator shall be knowledgeable in software system agreements. The costs and expenses of mediation, including compensation and expenses of the mediator (and except for the attorney's fees incurred by either party), is to be shared by the parties equally. If the parties are unable to resolve the claim, controversy or dispute within ninety (90) days after the date either party provides the other notice of mediation, then either party may bring and initiate a legal proceeding to resolve the claim, controversy or dispute unless the time period is extended by a written agreement of the parties. Notwithstanding the foregoing, nothing in this Section shall inhibit a party's right to seek injunctive relief at any time.

Section 8.5 Addresses for Notice

Any notice required or permitted to be given to any party to this Agreement shall be given in writing and shall be delivered personally or mailed by prepaid registered post. Any such notice shall be conclusively deemed to have been given and received on the day on which it is delivered or, if mailed, on the third business day following the date of mailing, and addressed, in the case of S&S, to:

Systems & Software, Inc.

Address: 10 East Allen St, Suite 201, Winooski, VT 05404
Attention: Executive Vice President
Phone: 802-865-1170

and in the case of the Organization, to: City of Redlands
Address: 35 Cajon St, Suite 15-A, Redlands, CA 92373
Attention: Aimee Hoover

Each party may change its particulars respecting notice, by issuing notice to the other party in the manner described in this Section 8.5.

Section 8.6 Assignment

Neither party may assign any of its rights or duties under this Agreement without the prior written consent of the other party, such consent not to be unreasonably withheld, except that either party may assign to a successor entity in the event of its dissolution, acquisition, and sale of substantially all of its assets, merger or other change in legal status. The Agreement shall inure to the benefit of and be binding upon the parties and their respective successors and permitted assigns.

Section 8.7 Reorganizations

The Organization acknowledges that the License, Services, and Support Fees set out in this Agreement have been established on the basis of the structure of the Organization as of the Effective Date. To the extent that the Organization amalgamates, consolidates or undergoes any corporate reorganization or transition (a "Reorganization"), and the resulting entity (whether or not the Organization is the resulting or continuing entity) requires additional Licenses to add additional Concurrent Users or sites, S&S shall be entitled to receive, and the Organization shall pay, an additional License, Support or other fee based on the then prevailing License, Support and other S&S fee schedule in effect. The provisions of this Section 8.7 shall apply to any subsequent Reorganizations occurring following the first Reorganization. The provisions of this Section 8.7 shall not apply where the Organization undergoes a Reorganization involving only other organizations that already have a valid License to use the same Software.

Section 8.8 Entire Agreement

This Agreement shall constitute the entire agreement between the parties hereto with respect to the subject matter. There are no other understandings, agreements, representations, warranties or other matters, oral or written, purportedly agreed to or represented by or on behalf of S&S by any of its employees or agents or contained in any sales materials or brochures. This Agreement may not be modified except by an amendment signed by an authorized representative of each party. No provisions in any purchase orders, or in any other documentation employed by or on behalf of the Organization in connection with this Agreement, regardless of the date of such documentation, will affect the terms of this Agreement, even if such document is accepted by S&S, with such provisions being deemed deleted. The parties have both had the opportunity to review this Agreement with counsel, and this Agreement shall not be construed in favor of or against either Party on account of drafting.

Section 8.9 Section Headings

Section and other headings in this Agreement are for reference purposes only and do not describe, interpret, define or limit the scope or extent of any provision hereof.

Section 8.10 Governing Law

This Agreement shall be governed by the laws of Ontario, Canada, without reference to the conflicts of law principles thereof; provided, however, that the Uniform Computer Information Transaction Act will not apply even if adopted as part of the laws of said State or Province. The United Nations Convention on Contracts for the International Sale of Goods (UNCCISG) does not apply to this Agreement.

Section 8.11 Trial by Jury

Organization and S&S hereby waive, to the fullest extent permitted by applicable law, the right to trial by jury in any action, proceeding or counterclaim filed by any party, whether in contract, tort or otherwise, relating directly or indirectly to this Agreement or to any acts or omissions of S&S in connection to this Agreement.

Section 8.12 Invalidity

The invalidity or unenforceability of any provision or covenant contained in this Agreement shall not affect the validity or enforceability of any other provision or covenant. Any such invalid provision or covenant shall be deemed modified to the extent necessary in order to render it valid and enforceable; if such provision may not be so saved, it shall be severed, and the remainder of this Agreement shall remain in full force and effect.

Section 8.13 Waiver

A term or condition of this Agreement may be waived or modified only by written consent of both parties. Forbearance or indulgence by either party in any regard shall not constitute a waiver of the term or condition to be performed, and either party may evoke any remedy available under this Agreement or by law despite such forbearance or notice.

Section 8.14 Counterparts

This Agreement may be executed in counterparts (whether by facsimile, via emailed PDF or otherwise), each of which shall constitute an original and all of which shall constitute one Agreement.

Section 8.15 Further Assurances

The parties shall do all such things and provide all such reasonable assurances as may be required to consummate this Agreement, and each party shall provide such further documents or instruments required by any other party as may be reasonably necessary.

Section 8.16 Allocation of Risk

Organization acknowledges that the limited warranties, disclaimers and limitations of liability contained in this Agreement are fundamental elements of the basis of bargain between Organization and S&S and set forth an allocation of risk reflected in the fees and payments due hereunder.

Section 8.17 Relationship

The parties are and shall remain independent contractors in the performance of this Agreement and nothing herein shall be deemed to create a joint venture, partnership or agency relationship between them. Neither party will have the power to bind the other party or to contract in the name of or create any liability against the other party in any way for any purpose. Neither party will be responsible for the acts or defaults of the other party or of those for whom the other party is in law responsible.

Section 8.18 U.S. Government End-Users

The Software (i) was developed exclusively at private expense; (ii) is a trade secret of S&S for the purposes of the Freedom of Information Act; (iii) is "commercial computer software" subject to limited utilization (Restricted Rights); and (iv) including all copies of the Software, in all respects is and shall remain proprietary to S&S or its licensors. Use, duplication or disclosure by the U.S. Government or any person or entity acting on its behalf is subject to restrictions for software developed exclusively at private expense as set forth in: (i) for the DoD, the Rights in Technical Data and Computer Software clause at DFARS 252.227-7013 and/or 252.227.7014 or any successor clause, and (ii) for all government agencies, the Commercial Computer Software – Restricted Rights clause at FAR 52.227-19 or any successor clause. The U.S. Government must refrain from changing or removing any insignia or lettering from the Software or from producing copies of the Software and manuals (except one copy of the Software for backup purposes). Use of the Software shall be limited to the facility for which it was acquired. All other U.S. Government personnel using the Software are hereby on notice that use of the Software is subject to restrictions that are the same as, or similar to, those specified above. The manufacturer/owner is N. S&S Computer Corporation, 1 Antares Drive, Suite 400, Ottawa, ON K2E 8C4.

Section 8.19 Equitable Relief

Organization acknowledges and agrees that it would be difficult to compute the monetary loss to S&S arising from a breach or threatened breach of this Agreement and that, accordingly, S&S will be entitled to specific performance, injunctive or other equitable relief in addition to monetary damages in the event of a breach or threatened breach of this Agreement by Organization.

Section 8.20 Language

The parties confirm that it is their wish that this Agreement, as well as all other documents relating to this Agreement, including notices, be drawn up in English only.

Section 8.21 Force Majeure

No default, delay or failure to perform on the part of S&S shall be considered a breach of this Agreement where such default, delay or failure is due to a force majeure or to circumstances beyond its control. Such circumstances will include, without limitation, strikes, riots, civil disturbances, actions or inactions concerning government authorities, epidemics, war, terrorist acts, embargoes, severe weather, fire, earthquakes, acts of God or the public enemy or default of a common carrier or other disasters or events.

Section 8.22 Survival

The following sections and articles shall survive the termination or expiration of this Agreement: Article II, Article V, Article VII, and Article VIII and any other provisions which are required to ensure that the parties fully exercise their rights and obligations hereunder.

IN WITNESS WHEREOF the parties hereto have duly executed this Agreement to be effective as of the Effective Date.

Systems & Software, Inc.

Name: Todd Richardson
Title: CFO

Date: 2024-11-06

City of Redlands

Per:

Name: Charles M. Duggan, Jr.

Title: City Manager

Date: November 19, 2024

Schedule "B" – Statement of Work ("SOW")

Please refer to the enQuesta 6 Statement of Work (SOW) and Capricorn Statement of Work (SOW) provided under separate cover.

Schedule B.0 – Redlands enQuesta v6 Statement of Work

Schedule B.1 – Redlands Capricorn Statement of Work

Schedule "C" – Standard Support and Maintenance Guidelines

Please refer to the Support & Maintenance Guidelines provided under separate cover.

Schedule "D" – Insurance Requirements

Please refer to the Redlands 2024 IRIC – Technology Vendors document provided under separate cover.

Schedule "E-1"

Third Party Components Additional Terms

A. Service Monitoring, Analyses and Oracle Software

1. S&S' service provider, Oracle, continuously monitors the Hosting Services to facilitate its operation of the Hosting Services; to help resolve Customer's service requests; to detect and address threats to the functionality, security, integrity, and availability. Information collected by Oracle monitoring tools (excluding Customer's Data) may also be used to assist in managing Oracle's product and service portfolio, to help Oracle address deficiencies in its product and service offerings, and for license management purposes.

2. Oracle may (i) compile statistical and other information related to the performance, operation and use of the Hosting Services, and (ii) use data from the Hosting Services in aggregated form for security and operations management, to create statistical analyses, and for research and development purposes (clauses i and ii are collectively referred to as "Service Analyses"). Oracle may make Service Analyses publicly available; however, Service Analyses will not incorporate Customer's Data, Personal Information or Confidential Information in a form that could serve to identify Customer or any individual. Oracle retains all intellectual property rights in Service Analyses.

3. IfOracle software is licensed to Customer under separate terms, then Customer's use of such software is governed by the separate terms. S&S has no obligation or responsibility with respect to such separately licensed Oracle software.

B. Service Specifications

Data Processing Agreement
Customer agrees that the Oracle Data Processing Agreement available at the link below sets out the parties' obligations with respect to processing of Data and Personal Information.

http://www.oracle.com/us/corporate/contracts/data-processing-agreement-011218-4261005.pdf

Oracle Services Privacy Policy
The Oracle privacy policy applicable to the Hosting Services is set out at the following link:
https://www.oracle.com/legal/privacy/services-privacy-policy.html

Oracle Cloud Hosting and Delivery Policies

https://www.oracle.com/assets/ocloud-hosting-delivery-policies-3089853.pdf

The Oracle Service descriptions – security

Oracle's applicable administrative, physical, technical and other safeguards, and other applicable aspects of system and content management are available the following link:

https://www.oracle.com/assets/corporate-security-practices-4490843.pdf

The foregoing information, including the links to such information, may be changed from time to time therefore Customer is responsible for reviewing such information periodically.

C. Standards

Details regarding Oracle's standards compliance for the Hosting Services may be viewed at the following link: https://www.oracle.com/ca-en/cloud/cloud-infrastructure-compliance/

IN WITNESS THEREOF, the parties have executed this Agreement as of the Effective Date.

CUSTOMER City of Redlands	S&S
By: _____	By: _____
(signature)	(signature)
Name: Charles M. Duggan, Jr.	Name: Todd Richardson
(print)	(print)
Title: City Manager	Title: CFO Date: 2024-11-06
Date: 11/19/2024	

Attachment "B"

Oracle Terms

The required terms set forth below are subject to change at Oracle's discretion upon 30 days notice. The Customer acknowledges:

(1) the Programs and/or hardware that are subject to this Agreement are limited to the Customer and no other legal entity.

(2) the use of the Programs are limited to the internal business operations of the Customer. Customer may allow agents or contractors (including, without limitation, outsourcers) to use the Programs on the Customer's behalf for the purposes of this Agreement, subject to the terms of this Agreement, provided that Customer is responsible for the agent's, contractor's and outsourcer's compliance with the Agreement in such use.

(3) the operating system delivered with the hardware is restricted to the terms of the license delivered with the hardware and only as incorporated in, and as part, of the hardware.

(4) the integrated Programs and integrated Programs options must be used in accordance with the terms of the Agreement and the hardware documentation and only as incorporated in, and as part, of the hardware.

(5) ancillary programs are those third party materials specified in the Program documentation which may only be used for the purposes of installing or operating the Programs with which the ancillary programs are delivered.

(6) Oracle or its licensors retain all ownership in the intellectual property rights to the Programs, operating system, integrated Programs, and integrated Programs options.

(7) third party technology that may be appropriate or necessary for use with some Oracle Programs and/or hardware is specified in the Program documentation, readme files, notice files, installation details and/or hardware documentation and that such third party technology is licensed to the Customer under the terms of the third party technology license agreement specified in the Program documentation, readme files, notice files, installation details and/or hardware documentation and not under the terms of this Agreement.

(8) the hardware, integrated Programs, and integrated Programs options are not specifically designed, manufactured, or intended for use as parts, components, or assemblies for the planning, construction, maintenance, or operation of a nuclear facility and prohibit use of the hardware, integrated Programs, or integrated Programs options for these purposes.

(9) the Customer is prohibited from assigning, giving, or transferring the Programs, operating system, integrated Programs, integrated Programs options, and/or any services ordered or an interest in them to another individual or entity (in the event the Customer grants a security interest in the Programs, operating system, integrated Programs, integrated Programs options, and/or any services, the secured party has no right to use or transfer the Programs, operating system, integrated Programs, integrated Programs options, and/or any services). If the Customer decides to finance its acquisition of the

Programs, hardware and/or any services, the Customer must follow Oracle's policies regarding financing which are available at http://oracle.com/contracts.

(10) the Agreement prohibits (a) use of the Programs for rental, leasing, timesharing, subscription service, hosting, or outsourcing; (b) the removal or modification of any Program or hardware markings or any notice of Oracle's or its licensors' proprietary rights; and (c) making the Programs available in any manner to any third party for use in the third party's business operations (unless such access is expressly permitted for the specific Program license); and (d) title to the Programs, operating system, integrated Programs, or integrated Programs options from passing to the Customer or any other party.

(11) the reverse engineering (unless required by law for interoperability), disassembly or decompilation of the Programs (the foregoing prohibition includes but is not limited to review of data structures or similar material produced by Programs), operating system, integrated Programs, or integrated Programs options is prohibited. The duplication of the Programs, operating system, integrated Programs, or integrated Programs options is prohibited, except for a sufficient number of copies for the Customer's licensed use and one copy of each Program media.

(12) The use of any additional software that Oracle may include with the Programs and/or hardware ordered for trial, non-production purposes only is restricted. The Customer may not use such additional software included with an order to provide training or attend training provided by S&S or a third party on the content and/or functionality of the software. The Customer has 30 days from the delivery date to evaluate the additional software, subject to the terms of the Agreement. If the Customer decides to use any additional software after the 30-day trial period, the Customer must obtain a license for such software from S&S. If the Customer decides not to obtain a license for the additional software after the 30-day trial period, the Customer will cease using and will delete any such software from the Customer's computer systems. Additional software included with an order are provided "as is" and Oracle does not provide technical support or offer any warranties for the software.

(13) technical support, if ordered from Oracle, is provided under Oracle's technical support policies in effect at the time the services are provided and that Oracle's technical support policies can be accessed at http://oracle.com/contracts. The Customer acknowledges that Oracle's technical support policies are incorporated into the Agreement by reference. If the Customer decides not to purchase technical support at the time of the license and/or hardware then the Customer will be required to pay reinstatement fees to Oracle in accordance with Oracle's current technical support policies if the Customer decides to purchase support at a later date.

(14) any third party firms retained by the Customer to provide computer consulting services are independent of Oracle and are not Oracle's agents and that Oracle is not liable for nor bound by any acts of any such third party firm.

(15) some Programs, operating system, integrated software, or integrated software options may include source code that Oracle may provide as part of its standard shipment of such Programs, operating system, integrated software, or integrated software options which source code shall be governed by the terms of this Agreement.

(16) hardware, if purchased, includes Oracle's hardware warranty in effect at the time the hardware is purchased and that Oracle's hardware warranty can be accessed at http://www.oracle.com/support/policies.html.

(17) to the extent not prohibited by applicable law, Oracle will have no liability for (a) any damages, whether direct, indirect, incidental, special, punitive or consequential, and (b) any loss of profits, revenue, data or data use, arising from the use of the Programs and/or hardware.

(18) at the termination of the Agreement, the Customer shall discontinue use and destroy or return to S&S all copies of the Programs and documentation.

(19) publication of any results of benchmark tests run on the Programs and/or hardware is prohibited.

(20) The Customer shall comply fully with all relevant export laws and regulations of the United States and other applicable export and import laws to assure that neither the programs, the hardware nor any direct product thereof, are exported, directly or indirectly, in violation of applicable laws.

(21) Oracle is not required to perform any obligations or incur any liability not previously agreed to between S&S and Oracle.

(22) S&S may, at any time audit the Customer's use of the Programs. The Customer is required to provide reasonable assistance and access to information in the course of such audit and S&S is permitted to report the audit results to Oracle. At S&S's sole discretion, S&S may assign the right to audit the Customer's use of the Programs to Oracle. Oracle and S&S shall not be responsible for any of Customer's costs incurred in cooperating with the audit.

(23) the Customer has not relied on the future availability of any hardware, Programs or updates in entering into the Agreement; however, (a) if the Customer orders technical support from Oracle, the preceding sentence does not relieve Oracle of its obligation to provide updates under such order, if-and-when available, in accordance with Oracle's then current technical support policies, and (b) the preceding sentence does not change the rights granted to Customer for any Program licensed under this Agreement, per the terms of this Agreement.

(24) Oracle is a third party beneficiary of this Agreement.

(25) the application of the Uniform Computer Information Transactions Act is excluded from this Agreement.

(26) If a third party makes a claim against the Customer that any (i) hardware (excluding the operating system, integrated Programs or integrated Programs options); or (ii) Programs ((i) and (ii) collectively referred to as the "indemnified material"); infringes their intellectual property rights based on the Customer's use of the indemnified material (as applicable), Customer must notify S&S within 10 days after Customer receives notice of the claim (or sooner if required by applicable law). Customer must give S&S sole control of the defense and any settlement negotiations; and give S&S the information, authority, and reasonable assistance S&S needs to defend against or settle the claim.

(27) this Agreement prohibits: (a) the transfer of the Programs except for temporary transfer in the event of computer malfunction if the Programs are embedded in a physical device and (b) the Customer from assigning, giving, or transferring the Programs and/or any services ordered or an interest in them to

another individual or entity (in the event the Customer grants a security interest in the Programs and/or any services, the secured party has no right to use or transfer the Programs and/or any services).

(28) the Programs are subject to a restricted license and can only be used pursuant to the terms of this Agreement and that the Customer is not permitted to modify the Programs.

(29) third party technology that may be appropriate or necessary for use with some Oracle Programs is specified in the documentation and that such third party technology is licensed to the Customer only for use with the Programs under the terms of the third party license agreement specified in the documentation.

Schedule "F"
Service Availability

Availability and Uptime Objectives:

Availability of the Hosting Services is defined as when the Software and Customer's data are operational and accessible via a public internet connection. S&S shall strive to make the Hosting Services available 100% of the time. In the unlikely event of any type of downtime the two following SLA schedules will be respected:

Table 1 – Data Center's Power, Network, and Internet Availability

Monthly Performance Rate	Percentage of Applicable Monthly Recurring Hosting Charge Credited to Customer's Account
Equal or Greater than 99%	0%
Equal or Greater than 98%	3%
Equal or Greater than 97%	5%
Equal or Greater than 95%	10%
Less than 95%	25%

Table 2 – enQuesta Production Server Environment and Data Availability

Monthly Performance Rate	Percentage of Applicable Monthly Recurring Hosting Charge Credited to Customer's Account
Equal or Greater than 98%	0%
Equal or Greater than 97%	3%
Equal or Greater than 96%	10%
Less than 95%	25%

Credits or remedies will be provided only upon request of the Customer pursuant to this SLA. Requests for credit must be received within thirty (30) days of the Customer receiving our Root Cause Analysis document for a particular unavailability event. Please note that the official unavailability time that will be subject to a credit will exclude any common exclusions (as listed below).

Remedies for failure to meet any commitment provided in this agreement may not be combined to cover the same second, minute or daytime period – only one remedy will be afforded to the Customer per time period.

Fault will be determined, and failure to perform under the obligations of this SLA identified, shall be based on S&S's reports related to Table 2 and Third Party Hosting

Provider's monthly monitoring reports related to Table 1, and the performance monitoring reports on these subjects will be final and binding on the parties. Any disagreements will be remedied in accordance with the governing Managed Hosting Support & Maintenance Agreement.

However, the Hosting Services may be unavailable during certain downtimes, which includes, but is not limited to, the following circumstances:

- **Routine Scheduled Downtime**. Periods of time for the purpose of conducting routine system maintenance. In such event, S&S shall use commercially reasonable efforts to provide Customer with a minimum of three (3) business days prior to any period of scheduled downtime and shall use commercially reasonable efforts to limit any such routine system maintenance to weekends between the hours of midnight and 6 AM EST.
- **Factors Outside Our Reasonable Control.** Due to factors outside S&S's reasonable control (for example, a Force Majeure event, emergencies such as natural disasters, power surges, lightning strikes, or a network or device failure external to our data centers) or other exceptional circumstances, S&S shall be entitled to take any actions determined, in its sole discretion, necessary or advisable to prevent, remedy, mitigate, or otherwise address actual or potential harm, interruption, loss, threat, security or like concern to hosting infrastructure ("Emergency Work"). S&S shall endeavor to provide advance notice of such Emergency Work to Customer when practicable and possible, but shall not be held responsible for any deterioration of performance or System unavailability to Customer during such events or Emergency Work.
- **Unauthorized Actions**. S&S shall not be responsible for any System unavailability that results from Customer's unauthorized action or lack of action when required, or from Customer's employees, agents, contractors, or vendors, or anyone gaining access to the Hosting Services by means of Customer passwords or equipment, or otherwise resulting from Customer failure to follow appropriate security practices. Although S&S will use commercially reasonable efforts to mitigate the effects of any such events, S&S cannot guarantee that such events will not occur. Accordingly, S&S disclaims any and all liability resulting from or relating to such events.
- **Failure to Adhere to Requirements**. S&S shall not be responsible for any System unavailability for any failure by reason of Customer's failure to adhere to any required configurations, use supported platforms, follow any policies for acceptable use, or use of the Hosting Services in a manner inconsistent with the features and functionality of the Hosting Services (for example, attempts to perform operations that are not supported, exceeding prescribed quotas, or suspected abusive behavior) or inconsistent with S&S's published guidance.

City Council Meeting **I. 9.**

DATE: 03/03/2026

TO: Honorable Mayor and City Council Members

SUBJECT: Adopt Ordinance No. 3000 Amending Chapter 10.56 of the Redlands Municipal Code relating to Bicycles to establish regulations governing the use of Electric Bicycles (Police Chief Tolber)

MOTION(S):

If the City Council determines that staff's recommendation is appropriate, the following motion is provided:

I move to adopt Ordinance No. 3000.

RECOMMENDATION:

It is recommended that the City Council adopt Ordinance No. 3000 amending Chapter 10.56 of the Redlands Municipal Code relating to Bicycles to establish regulations governing the use of Electric Bicycles.

DISCUSSION:

The proposed ordinance and staff report prepared for the introduction of this ordinance are available in the City Clerk's office.

ALTERNATIVES:

The Council may continue this matter in order to allow additional time to review Ordinance No. 3000.

STRATEGIC PLAN:

Not Applicable

SUBMITTED BY:
Jeanne Donaldson, City Clerk

RECOMMENDED BY:
Charles M. Duggan Jr., City Manager

REVIEWED BY:
Yvette M. Abich Garcia, City Attorney
Janice McConnell, Assistant City Manager
Danielle Garcia, Management Services/Finance Director

PREPARED BY:
Altheresa Rothschild, Assistant City Clerk

Fiscal Impact

Discussion:

Codification: $22/per page affected by the change
Legal Publication: $395

Attachments

Ordinance No. 3000

ORDINANCE NO. 3000

AN ORDINANCE OF THE CITY OF REDLANDS AMENDING CHAPTER 10.56 ("BICYCLES") OF TITLE 10 OF THE REDLANDS MUNICIPAL CODE TO ESTABLISH REGULATIONS GOVERNING THE USE OF ELECTRIC BICYCLES

Section 1. The Table of Contents of Chapter 10.56 of the Redlands Municipal Code, titled "Bicycles," is hereby amended to read as follows:

"CHAPTER 10.56
BICYCLES

SECTION:

10.56.010: License Required
10.56.020: License; Issuance
10.56.030: License; Condition Of Bicycle
10.56.040: License; Effect
10.56.050: License Plate And Registration
10.56.060: License; Bicycle Attachment
10.56.070: License Plate Removal
10.56.080: License; Recordation
10.56.090: License; Notification Of Bicycle Destruction
10.56.100: Fees; Initial Purchase And Renewal
10.56.110: Fees; Penalty For Late Renewal
10.56.120: Fees; Payment
10.56.130: Fees; Transfer
10.56.140: Dealer; Secondhand Dealer Purchase Report
10.56.150: Dealer; Report Of Sale
10.56.160: Registration Transfer; Report
10.56.170: Registration Transfer; Application
10.56.180: Impoundment
10.56.190: Citation; Issuance
10.56.200: Bicycle Operation
10.56.210: Electric Bicycles
10.56.220: Electric Bicycles Operation
10.56.230: Electric Bicycles Penalty for Violation"

Section 2. Chapter 10.56 of the Redlands Municipal Code, titled "Bicycles," is hereby amended by adding Sections 10.56.200 through 10.56.230 to read as follows:

"10.56.200: BICYCLE OPERATIONS:

A. Riding in group. Persons operating bicycles within a bicycle lane or upon a bicycle path shall ride in single file except as provided for in Vehicle Code § 21202(a).

B. Direction of travel. Persons riding or operating a bicycle on a bicycle trail or path may proceed in either direction except on those trails or paths designated for one-way traffic by appropriate markings or signs defined by the direction of adjacent vehicular traffic.

C. Walking bicycles. Bicycles may be walked subject to all provisions of law applicable to pedestrians.

D. Yielding right-of-way. Whenever any person is riding a bicycle upon a sidewalk, such person shall yield right-of-way to any and all pedestrians. A person riding a bicycle, upon entering a roadway or driveway from a sidewalk, shall yield to all traffic.

E. Riding on sidewalks. Bicycles may be ridden on all sidewalks, at a speed not to exceed five miles per hour, except upon sidewalks within a business district, upon sidewalks adjacent to any public school building when school is in session, upon a sidewalk at a recreation center when in use, upon a sidewalk at a church during services, over any pedestrian overcrossing or upon any other sidewalk where prohibited by posted signs.

10.56.210: ELECTRIC BICYCLES:

An electric bicycle, or "E-Bike," which is a bicycle equipped with fully operable pedals and an electric motor of less than 750 watts, and is categorized by the following:

A. Class 1 – an electric bicycle equipped with a motor that provides assistance only when the rider is pedaling, and that ceases to provide assistance when the bicycle reaches a speed of 20 miles per hour.

B. Class 2 – an electric bicycle equipped with a motor that may be used exclusively to propel the bicycle, and that is not capable of providing assistance when the bicycle reaches a speed of 20 miles per hour.

C. Class 3 - an electric bicycle equipped with a motor that provides assistance only when the rider is pedaling, and that ceases to provide assistance when the bicycle reaches a speed of 28 miles per hour and is equipped with a speedometer.

10.56.220: ELECTRIC BICYCLES OPERATION:

All references to this section 10.56.220 shall include section 10.56.200. These requirements are in addition to the other regulations for bicycle operation set forth in section 10.56.200.

A. No person shall ride an electric bicycle in an unsafe manner on any publicly owned property, including but not limited to a public roadway, highway, sidewalk, park; nor on any private property open to the public.

1. "Unsafe manner" means any act or acts in violation of the Redlands' Municipal Code, California Vehicle Code, or other existing law. An "unsafe manner" can also

be defined as operating an electric bicycle in such a way as to constitute a danger to the operator, a passenger, other motorists, other riders, or pedestrians in the area.

2. Examples of riding in an unsafe manner may include, but are not limited to, the following actions:
   a) Intentionally lifting one or more wheels into the air while riding on a highway, sidewalk, bicycle lane, or bike path. It is not a violation of this subsection if one or more wheels lose contact with the ground briefly due to the condition of the road surface or other circumstances beyond the control of the rider.
   b) Riding on the sidewalk without due caution for pedestrians.
   c) Riding on the highway, or bicycle lane against the flow of traffic.
   d) Intentionally swerving or riding around stopped or slowed traffic.
   e) Operating an electric bicycle in a manner it was not designed for, including carrying passengers when not designed for carrying passengers, or standing on the seat of the bicycle.
   f) Not obeying posted signs or traffic lights.
   g) A person under the age of 18 riding without a properly fitted and fastened helmet.

B. No person shall operate an electric bicycle while holding and operating a handheld wireless telephone or an electronic wireless communications device unless the wireless telephone or electronic wireless communications device is specifically designed and configured to allow voice-operated and hands-free operation, and it is used in that manner while riding.

   1. An "electronic wireless communications device" includes, but is not limited to, a broadband personal communication device, a handheld device, or pager.

10.56.230: ELECTRIC BICYCLES PENALTY FOR VIOLATION:

Any violation of this article is deemed an infraction punishable by a fine of one thousand dollars ($1,000). A second or subsequent violation of this article shall be punishable by a fine of two thousand dollars ($2,000).”

Section 2. If any section, sentence, clause or phrase of this ordinance or the application thereof to any entity, person or circumstance is held for any reason to be invalid or unconstitutional, such invalidity or unconstitutionality shall not affect other provisions or applications of this ordinance which can be given effect without the invalid provisions or application, and to this end the provisions of this ordinance are severable. The City Council of the City of Redlands hereby declares that it would have adopted this ordinance and each section, sentence, clause or phrase thereof, irrespective of the fact that any one or more section, subsections, sentences, clauses or phrases be declared invalid or unconstitutional.

Section 3. The Mayor shall sign this ordinance and the City Clerk shall certify to the adoption of this ordinance and shall cause it, or a summary of it, to be published once in a newspaper of general circulation within the City, and thereafter, this ordinance shall take effect as provided by law.

_____
Mario Saucedo, Mayor

ATTEST:

_____
Jeanne Donaldson, City Clerk

I, Jeanne Donaldson, City Clerk, City of Redlands, hereby certify that the foregoing Ordinance was duly adopted by the City Council at the regular meeting thereof, held on the ____ day of _____, 2026, by the following vote:

AYES: Councilmembers Barich, Tejeda, Davis, Shaw; Mayor Saucedo

NOES: None

ABSENT: None

ABSTAIN: None

_____
Jeanne Donaldson City Clerk

City Council Meeting **I. 10.**

DATE: 03/03/2026

TO: Honorable Mayor and City Council Members

SUBJECT: Accept the donation of a 2026 Toyota Highlander, valued at the amount of $50,675.00, from the Redlands Police Community Foundation for Police Department Citizen Volunteers (Police Chief Tolber)

MOTION(S):

If the City Council determines that staff's recommendation is appropriate, the following motion is provided:

I move to accept the donation of a 2026 Toyota Highlander for the Redlands Police Department's Citizen Volunteers, valued at the amount of $50,675.00, from the Redlands Police Community Foundation.

RECOMMENDATION:

Staff recommends that City Council accept the donation of a 2026 Toyota Highlander for the Redlands Police Department's Citizen Volunteers, valued at the amount of $50,675.00, from the Redlands Police Community Foundation.

DISCUSSION:

Through generous local donations, the Redlands Police Community Foundation purchased one (1) 2026 Toyota Highlander to be used by the Redlands Police Department's Citizen Volunteers. This vehicle will be replacing Unit 671 (2013, Dodge Caravan).

In 2025, the Redlands Police Department Citizen Volunteers gave approximately 3,200 hours of service to the Police Department and residents of Redlands. The acceptance of this vehicle will aid them in continuing to provide valuable volunteer services to the Police Department and the community.

ALTERNATIVES:

Council may decline the donation or provide alternative direction to staff.

STRATEGIC PLAN:

N/A

SUBMITTED BY:
Police Chief Rachel Tolber

RECOMMENDED BY:
Charles M. Duggan Jr., City Manager

REVIEWED BY:
Janice McConnell, Assistant City Manager
Danielle Garcia, Management Services/Finance Director

PREPARED BY:
Chay Miller, Police Executive Assistant

Fiscal Impact

Fiscal Year:	2026
Revenue Generating:	No
Appropriation Required Y/N:	No
Budgeted Y/N:	No

Discussion:

Per the Finance Department, this agenda item does not require an additional appropriation form because consistent with the GAAFR standards, donated capital assets that will be used in operations are accounted for outside the governmental funds.

Attachments

Letter of Intent to Donate

BOARD of DIRECTORS
Chris Martin,
President
Terry Vines,
Vice President
Judy Cannon,
Past President
David Streit,
Treasurer
Mike Bosman,
Secretary
Brenda Boon
Kelvin Bryant
Donna Ferracone
Gail Howard
Martin Lemon
Jim Nolin
Amy Strong

POLICE ADVISORS
Rachel Tolber,
Chief of Police
Esteban Valenzuela,
Commander
Chay Miller,
PD Executive Assistant

An IRS Code Section 501(c)(3) Charitable Organization

REDLANDS POLICE COMMUNITY FOUNDATION (RPCF)

P.O. Box 1025
Redlands, CA 92373
909.335.4744
www.rpcf365.org

January 12, 2026

Chief Rachel Tolber
Redlands Police Department
30 Cajon St.
Redlands, CA 92373

Dear Chief Tolber,

As you know, the Redlands Police Community Foundation (RPCF) is a non-profit charitable organization dedicated to providing financial support to the Redlands Police Department (RPD) beyond the general municipal budget, in support of community programs and events that improve the quality of life for residents of Redlands. As such, the RPCF supports and funds the operational expenses of the RPD Citizen Volunteer Unit, an auxiliary unit of the RPD that provides additional public safety services to the community.

It is the desire of the RPCF to donate a vehicle to the RPD for use by the Citizen Volunteers to assist the department in providing enhanced public safety services to the community of Redlands. The vehicle to be donated is a 2026 Toyota Highlander, valued in the amount of $50,675.00. Please accept this letter as written intent of the RPCF to make the donation.

Sincerely,

Christopher Martin, President
Redlands Police Community Foundation

City Council Meeting **I. 11.**

DATE: 03/03/2026

TO: Honorable Mayor and City Council Members

SUBJECT: Approve the sole source purchase order with West Coast Lights & Sirens to purchase Getac mounts in the amount of $59,558.98 (Police Chief Tolber)

MOTION(S):

If the City Council determines that staff's recommendation is appropriate, the following motion is provided:

I move to approve a sole source purchase order with West Coast Lights & Sirens to purchase Getac mounts in the amount of $59,558.98.

RECOMMENDATION:

Staff recommends that the City Council approve a sole source purchase order with West Coast Lights & Sirens to purchase Getac mounts in the amount of $59,558.98.

DISCUSSION:

The Redlands Police Department currently operates 15 patrol and forensic vehicles equipped with Panasonic Toughbook mobile data terminal (MDT) systems that have reached their end-of-life and are no longer supported. Due to ongoing Spillman system upgrades, these vehicles must be retrofitted to support Getac MDT units, which will require the installation of new antennas and mounting systems. This upgrade will extend the service life of the existing fleet while enabling the Getac equipment to be transferred and reused in future vehicle replacements.

ALTERNATIVES:

City Council may elect not to approve the sole-source purchase order. Without this upgrade, vehicles may be taken out of service as existing MDT systems fail, since the current equipment is no longer supported or repairable. This could reduce fleet availability and negatively impact operational readiness.

STRATEGIC PLAN:

Not applicable.

SUBMITTED BY:
Rachel Tolber, Chief of Police

RECOMMENDED BY:
Charles M. Duggan Jr., City Manager

REVIEWED BY:
Janice McConnell, Assistant City Manager
Danielle Garcia, Management Services/Finance Director
Dana Abramovitz-Daniel, Procurement Manager

PREPARED BY:
Jimmy Nguyen, Management Analyst

Fiscal Impact

Fiscal Year:	2025-26
Revenue Generating:	N
Appropriation Required Y/N:	N
Amount:	$59,558.98
Account No.:	101202

Discussion:
There will be no fiscal impact to the General Fund.

Attachments

WCLS Sole Source

Sole Source/ Single Source/ Standardization Form

For procurement of supplies, equipment and services valued at $5,000 and over

NOTE: Every question must be answered with appropriate documentation attached; incomplete forms will be immediately rejected by Purchasing.

Date: 1/27/26

TO: Purchasing Division

FROM: Police Department

Purchase Requisition # MUNIS to generate

Estimated Total Cost: $ 59,558.98

Proposed Vendor: West Coast Lights & Sirens

Request Term: 04/27/2026

This form must accompany the purchase document whenever an exception to the competitive process is requested. Requests for goods and/or services from a specific vendor or limited to a specific brand, where substitutes to the recommended vendor or brand are unacceptable, must be accompanied by a written justification explaining the circumstances that make alternatives unacceptable.

The City Manager will determine whether the justification is appropriate. Requests for exception must be supported by factual statements that will pass an audit.

INSTRUCTIONS

1. Please check all applicable categories (a. through i.) below and provide additional information where indicated.

☒ a. The requested product is an integral repair part or accessory compatible with existing equipment.

Existing Equipment: X

Manufacturer/Model Number: _____

Age: _____

Current Estimated Value: _____

☐ b. The requested product has unique design/performance specifications or quality requirements that are not available in comparable products.

☐ c. I have standardized the requested product and the use of another brand/model would require considerable time and funding to evaluate.

☐ d. The requested product is one in which I (and/or my staff) have specialized training and/or extensive expertise. Retraining would incur substantial cost in time and/or funding.

☐ e. The requested product is used or demonstration equipment available at a lower-than-new cost.

☐ f. Repair/Maintenance service is available only from manufacturer or designated service representative.

☐ g. Upgrade to or enhancement of existing software is available only from manufacturer.

☒ h. Service proposed by vendor is unique; therefore, competitive bids are not available or applicable.

☐ i. Other factors (provide detailed explanation in #2 below).

2. Provide a detailed explanation and pertinent documentation *for each category* checked in item 1 above. Attach additional sheets if necessary:

All of the vehicles which need the updated MDT's are in service and were outfitted initally by West Coast Lights & Sirens. Without the updated MDT's the vehicles would be taken out of service when the current MDT's fail.

3. Was an evaluation of other equipment, products, or services performed?

☐ Yes ■ No

***If yes, please explain the type of evaluation performed and provide all supporting documentation*:**

The Department and West Coast Lights & Sirens have worked together for over 10 years. Durir

4. List below the name of each individual who was involved in the evaluation, if conducted, and in making the recommendation to procure this product or service. Attach additional information, if necessary.

5. Explain what action(s) the department would take if the sole/single source services were no longer available

In accordance with City guidelines, the Police Department would solicit three bids and select the lowest responsive bidder. However, this process may create complications, as not all vendors are authorized purchasers or partners of the equipment and systems currently installed in our vehicles. The selected vendor must have the capability to test, integrate, and reuse existing equipment to ensure fiscal responsibility while maintaining officer safety and operational reliability.

6. I certify that the above information is accurate to the best of my knowledge, and a signed copy of this document will be kept on file and available for audit in my department

Tim Edson 01/27/2026

Prepared by Date

_____

Department Director Date

Purchasing Approvals

_____

Purchasing Agent Approval Date

_____

City Manager Approval Date

WEST COAST LIGHTS & SIRENS, INC.

601 COLUMBIA AVE
UNIT "B"
RIVERSIDE, CA 92507

Phone # 951-779-9257 Info@wcls.us
Fax # 951-779-9256 WCLS.US

PROPOSAL

Date	Estimate #
1/20/2026	17457

Name / Address
REDLANDS POLICE DEPARTMENT 212 BROOKSIDE AVENUE REDLANDS, CA 92373 ATTN: ACCOUNTS PAYABLE

Terms	VEHICLE TYPE
Net 30	

Item	Description	Qty	Cost	Total
	>>>ESTIMATE TO INSTALL NEW DOCKING STATION AND ANTENNAS ON 2020 PIU'S<<< >>CAGES MAY NEED TO BE REMOVED FOR ANTENNA<<			
150/HOUR	LABOR TO INSTALL THE FOLLOWING	90	150.00	13,500.00T
CM-DH-SA-LED	SWING ARM W/ CLEVIS FOR DOCKING STATION. MOUNT ON FLAT SURFACE	15	301.16	4,517.40T
SHIPPING	SHIPPING FOR TROY ITEM	1	225.00	225.00
C-DMM-3015	SWING UP DEVICE MOUNT FOR 2020 FORD INTERCEPTOR UTILITY VEHICLE	15	376.27	5,644.05T
PKG-KB-2001	PACKAGE – RUGGED KEYBOARD WITH MOUNT (INCLUDES EMERGENCY KEY)	15	523.00	7,845.00T
SHIPPING	SHIPPING FOR HAVIS ITEMS	1	400.00	400.00
7170-0694-03	GETAC K120 TABLET DOCKING STATION WITH 120W AUTO POWER ADAPTER, TRI RF	15	1,162.12	17,431.80T
SHIPPING	SHIPPING FOR GAMBER JOHNSON	1	300.00	300.00
AP-MF5G-CG-Q-B1	AIRGAIN ANTENNA PLUS MULTIMAX 5G EZ CONNECT ANTENNA THREADED BOLT - BLACK - 1" CABLES, 1 5G/LTE - 1 GNSS	15	152.81	2,292.15T
CH-CWG-1-1-1-19	EZCONNECT CABLE HARNESS 19' - 1 LTE (SMA M) - 1 WIFI (SMA M) - 1 GNSS (SMA M)	15	97.93	1,468.95T
SHIPPING	SHIPPING FOR ANTENNA	1	100.00	100.00
JOB MATERIALS	MISC. PARTS, WIRE, ZIP TIES, CLAMPS, FASTENERS, RELAYS, ETC.	15	75.00	1,125.00T

***ESTIMATES ARE VALID FOR 30 DAYS.**
***ORDERS WILL BE INVOICED UPON NOTIFICATION OF COMPLETION**
***RETURNS/CANCELLATIONS ARE SUBJECT TO A 25% RESTOCKING FEE AND SHIPPING CHARGES.**
***PLEASE MAKE SURE YOU HAVE ALL CUSTOMER SUPPLIED PARTS WHEN VEHICLE IS DROPPED OFF TO AVOID DELAYS. IF DELAYS CONTINUE, WE WILL SUPPLY NEEDED PARTS AT CUSTOMERS EXPENSE.**
***CALIFORNIA CERTIFIED SMALL BUSINESS #49878**
***NOTE: SALES TAX WILL BE CHARGED ON INSTALLATION LABOR ON A VEHICLE WITH 500 MILES OR LESS OR UNDER 6 MONTHS SINCE REGISTRATION WITH THE DMV**

Subtotal	$54,849.35
Sales Tax (8.75%)	$4,709.63
Total	$59,558.98

City Council Meeting **I. 12.**

DATE: 03/03/2026

TO: Honorable Mayor and City Council Members

SUBJECT: Approve a request in the amount of $2,565.00 for the temporary street closure related to the Art-On-State-Street event hosted on Sunday, March 15, 2026, by the Redlands Art Association, and determine that the event is categorically exempt from environmental review pursuant to Section 15311(c) of the state's guidelines implementing the California Environmental Quality Act (Facilities and Community Services Director Crocker)

MOTION(S):

If the City Council desires to provide in-kind support for this event, the following motions are provided:

1. I move that the City Council determine that the approval of the event is exempt from environmental review pursuant to Section 15311(c) of the State's guidelines implementing the California Environmental Quality Act;

2. I move to approve the expenditure of city resources and in-kind support in the amount of $2,565.00; and

3. I move to approve the temporary street closures detailed in the staff report for the Art-On-State-Street Event, which will be held on Sunday, March 15, 2026.

RECOMMENDATION:

Staff recommends that the City Council direct staff accordingly regarding the request for in-kind support and the temporary street closures. Staff further recommends City Council determine that authorization for items related to the Art-On-State-Street Event is exempt from environmental review pursuant to Section 15311(c) of the State's guidelines implementing the California Environmental Quality Act (CEQA).

DISCUSSION:

The Facilities and Community Services Department manages the administration and issuance of permits for special events held in public areas of the City. Upon the issuance of a special event permit, the event may take place contingent on the event organizer paying the required fees. However, the City recognizes the value of partnering with non-profit agencies and organizations to provide services beneficial to the community. In an effort to support programs that provide community benefit, the City Council will, from time to time, consider authorizing in-kind support, including the use of city equipment, staff, and facilities for special events.

The Redlands Art Association is a registered non-profit organization based in the City of Redlands. They are requesting to host their Art-On-State-Street Event in downtown Redlands on Sunday, March 15, 2026, from 7:00 a.m. to 6:00 p.m. This will be their 9th year holding this event, and the Redlands Art Association intends to provide a family-friendly event featuring live music, vendors, performers, and food.

The Redlands Art Association has submitted a request for approval to temporarily close specific streets in the downtown area on Sunday, March 15, 2026, to accommodate the event. The proposed closures include:

- State Street between 6th and 7th Streets

The requested closure times are as follows:

- 6:00 a.m. to 7:00 p.m.

Additionally, the Redlands Art Association is requesting in-kind support in the amount of $2,565.00 for departmental resources, including Facilities and Community Services (FCS) personnel. Per the application, they anticipate 1,000 attendees, with participation from more than 40 vendors.

The City previously approved $1,350.00 for the 8th annual Art-On-State Street event in 2025, hosted by the Redlands Art Association, which gathered over 1,500 people in the middle of downtown Redlands. This event is focused on raising awareness in the arts community, which also generates profit and engagement for the City of Redlands.

The event is exempt from the requirements of the California Environmental Quality Act’s guidelines pursuant to Section 15311(c). Section 15311(c), Accessory Structures Class 11 facilities, which consists of the construction or replacement of minor structure accessory to existing commercial, industrial, or institutional facilities, including placement of seasonal or temporary use items such as mobile food units, portable restrooms or similar items in generally the same locations from time to time in publicly owned parks or other facilities designed for public use.

ALTERNATIVES:

The City Council may elect to deny the request for in-kind support, deny the request for temporary street closure and direct staff accordingly.

STRATEGIC PLAN:

Priority A - Quality of Life, Beautification, Arts and Culture.

SUBMITTED BY:
Tabitha Crocker, Facilities and Community Services Department Director

RECOMMENDED BY:
Charles M. Duggan Jr., City Manager

REVIEWED BY:
Janice McConnell, Assistant City Manager
Christopher Boatman, Assistant City Manager
Danielle Garcia, Management Services/Finance Director

PREPARED BY:
Jaclyn Ramirez, Administrative Assistant II

Fiscal Impact

Fiscal Year: FY 2025-26
Amount: $2,565
Discussion:
Please see the "Fiscal Impact" attachment for reference.

Attachments

Fiscal Impact
In-Kind Support Request
Verification of Non-Profit
Street Closure Permit

In anticipation of the City Council's consideration of this request, staff has compiled the following table outlining costs related to fees established by Resolution of the City Council and departmental charges pertaining to personnel and equipment resources necessary for the support of the event. The departmental charges are costs outside of normal City operations that would not be incurred by the City if the special event was not taking place.

Departmental Charges (Personnel & Equipment)	**2025-2026 Amount**	**Type**	**2024-2025 Amount**
Police Personnel[1]	$0.00	Hard Cost	$0.00
Fire Personnel[1]	$0.00	Hard Cost	$0.00
Facilities & Community Services Personnel[1]	$1,125.00	Hard Cost	$3,150.00
Personnel & Equipment Subtotal	**$1,125.00**		$3,150.00
Fees Established by City Council Resolution			
Park Reservation	$0.00	Soft Cost	$0.00
FCS Equipment	$1,440.00	Soft Cost	$0.00
Fire Equipment	$0.00	Soft Cost	$0.00
Fees Subtotal	**$1,440.00**		**$0.00**
Total Departmental Charges and Fees	**$2,565.00**		$3,150.00
	$1,125.00 **$1,440.00** **$2,565.00**	Hard Cost Soft Cost Total	**$3,150.00** **$0.00** **$3,150.00**

[1]*Personnel costs are calculated conservatively assuming the highest staff cost scenario. Actual costs may vary on the day of the event based on the actual staff present. Actual costs will be confirmed following the event and will be included in a reconciliation report presented to the City Council.*

The following table summarizes the total estimated costs associated with the use of City resources and waiver of fees approved for events scheduled during Fiscal Year 2025-26 to date:

TABLE 2: FY 2025-26 Fee Waivers to date

Hard Costs	**Soft Costs**	**Deposits Refunded**	**Waiver Amount**	**Net Amount**
$270,675.65	$19,269.63	$0.00	$289,945.28	$289,945.28

City of Redlands

In-Kind Support Request

Event Name: Art-On-State-Street

Event Date(s): March 15, 2026 **Location(s):** E State Street between 6th & 7th Sts

Rain Out Date: none **Beginning Time:** 7 am **End Time:** 6 pm

Describe Your Request:

This completed form with all supporting documentation shall be submitted a minimum of 60 days prior to the scheduled event. Additional information may be attached to this application form, as needed.

Close State Street between 6th & 7th Streets to vehicular traffic for RAA's semi-annual art show in front of their Gallery & Art Center, making a pedestrian walk way.

Select and Describe All City Provided Services That May Apply to Your Request :

- [x] Traffic (*Personnel, equipment, cones, barricades, no-parking* — Barricades (street closure)
- [ ] Police (*Public Safety Personnel*)
- [ ] Fire (*Paramedics, Inspectors*)
- [ ] Parks (*Cleanup Personnel, Ball Field Lights*)
- [ ] Facility

Refuse/Recycling (*Event Receptacles, Roll-Off Service*) acquired by Event Organizers through Redlands Customer Service

Section 13.65 of the Redlands Municipal Code requires that events that serve more than 2,000 individuals per day will be required to submit for review and approval a Large Venue Recycling Plan. The Quality of Life Department may require smaller events to comply with City recycling practices as a condition of waiving fees.

- [x] Other — 4 trash boxes w/ liners.

Group/Organization Name: Redlands Art Association

Is your Group/Organization a Registered Non-Profit: [x] Yes [ ] No **Non-Profit Federal Tax ID Number:**

Does your Group/Organization Presently Have Liability Insurance? [x] Yes [ ] No

Please be advised that depending upon your request, you may be required to provide proof of insurance coverage in an amount determined by the City and naming the City as an additional insured.

Has your Group/Organization received fee waivers from the City in the past? Yes, this is a semi-annual event

Primary Contact Name & Title: Sandy Davies, event cooridinator

Mailing Address: 215 E State St, Redlands, CA 92373-5232

Phone Number: 9092734598 **E-Mail Address:** sandydavies@verizon.net

As a part of our commitment to fiscal responsibility, the City of Redlands gathers data associated with the economic and social benefits associated with in-kind support. Please provide estimates, as applicable, for your event.

Positive outcomes for your organization from this

Redlands Art Association's mission is to promote art education for the visual arts. This show 1) further educates our artists on how to show/sell to the public and 2) educate the public on what arts are available, the cost of art ware, and art practices they may want to explore. Our artists are role models for the artist wanna-be.

Describe what economic benefit and impact this event will bring to the City:

Redlands Art Association has a good reputation in the local area. Our shows bring visitors to downtown. They know they'll see interesting art in the most pedestrian friendly/window shopping part of town. They also learn about the art classes that will bring them back.

In April 2002, the City Council adopted Resolution No. 6038, which encourages groups or organizations requesting in-kind support from the City to use local businesses when procuring goods and services associated with the event. Receipts will need to be submitted through a follow up form. Failure to submit post event documentation (within 15 days) may affect future requests.

	Proposed Event	Previous Event Actuals	Vendors
Attendance: Redlands Residents	800.....	800.....	
Attendance: Non-Residents	300.....	300.....	
Food & Beverage Sales			
Merchandise Sales	$ 6000 art sales	$ 5000 art sales	
Ticket/Entrance Fees			
Other			
Total Revenue	RAA earns $1200	$ 1200	

I certify that all statements on this application are true and complete to the best of my knowledge.

Signature: Sandy Davies **Title:** event coordinator

Please Print Your Name: Sandy Davies **Date:** 12-29, 2025

To Be Completed by the City of Redlands

Date Received: 01/05/2026 **Received By:** Jaclyn. Ramirez

Notes:

City Manager Approval: City Council Approval:

Department of the Treasury
Internal Revenue Service
Tax Exempt and Government Entities
P.O. Box 2508
Cincinnati, OH 45201

Date:
03/18/2022
Employer ID number:

Person to contact:
Name: Customer Service
ID number: 31954
Telephone: (877) 829-5500
Accounting period ending:
December 31
Public charity status:
170(b)(1)(A)(vi)
Form 990 / 990-EZ / 990-N required:
Yes
Effective date of exemption:
November 15, 2020
Contribution deductibility:
Yes
Addendum applies:
No
DLN:
26053716008631

REDLANDS ART ASSOCIATION
C/O SUZANNE BURKE
215 EAST STATE STATE STREET
REDLANDS, CA 92373

Dear Applicant:

We're pleased to tell you we determined you're exempt from federal income tax under Internal Revenue Code (IRC) Section 501(c)(3). Donors can deduct contributions they make to you under IRC Section 170. You're also qualified to receive tax deductible bequests, devises, transfers or gifts under Section 2055, 2106, or 2522. This letter could help resolve questions on your exempt status. Please keep it for your records.

Organizations exempt under IRC Section 501(c)(3) are further classified as either public charities or private foundations. We determined you're a public charity under the IRC Section listed at the top of this letter.

Based on the information you submitted with your application, we approved your request for reinstatement under Revenue Procedure 2014-11. Your effective date of exemption, as listed at the top of this letter, is retroactive to your date of revocation.

If we indicated at the top of this letter that you're required to file Form 990/990-EZ/990-N, our records show you're required to file an annual information return (Form 990 or Form 990-EZ) or electronic notice (Form 990-N, the e-Postcard). If you don't file a required return or notice for three consecutive years, your exempt status will be automatically revoked.

If we indicated at the top of this letter that an addendum applies, the enclosed addendum is an integral part of this letter.

For important information about your responsibilities as a tax-exempt organization, go to www.irs.gov/charities. Enter "4221-PC" in the search bar to view Publication 4221-PC, Compliance Guide for 501(c)(3) Public Charities, which describes your recordkeeping, reporting, and disclosure requirements.

Sincerely,

Stephen A. Martin
Director, Exempt Organizations
Rulings and Agreements

Redlands Art Association

EIN: | Redlands, California, United States

Publication 78 Data

Organizations eligible to receive tax-deductible charitable contributions. Users may rely on this list in determining deductibility of their contributions.

On Publication 78 Data List: Yes

Deductibility Code: PC

Auto-Revocation List

Organizations whose federal tax exempt status was automatically revoked for not filing a Form 990-series return or notice for three consecutive years.
Important note: Just because an organization appears on this list, it does not mean the organization is currently revoked, as they may have been reinstated.

Exemption Type: 501(c)(3)

Exemption Reinstatement Date: 11-15-2020

Revocation Date: 11-15-2020

Revocation Posting Date: 07-12-2021

Determination Letter

A favorable determination letter is issued by the IRS if an organization meets the requirements for tax-exempt status under the Code section the organization applied.

Final Letter(s)

FinalLetter_23-7292598_REDLANDSARTASSOCIATION_11092021_00.tif [/pub/epostcard/dl/FinalLetter_23-7292598_REDLANDSARTASSOCIATION_11092021_00.tif]

Copies of Returns (990, 990-EZ, 990-PF, 990-T)

Electronic copies (images) of Forms 990, 990-EZ, 990-PF or 990-T returns filed with the IRS by charities and non-profits.

- **Tax Year 2022 Form 990**
- **Tax Year 2021 Form 990**
- **Tax Year 2020 Form 990**
- **Tax Year 2017 Form 990**
- **Tax Year 2016 Form 990**

Event: Art on State St. Date: 03/15/26

PERMIT TO CLOSE STREET FOR SOCIAL EVENT(S)

Permission to close a street for an event is subject to the following requirements:

1.	**Street Closure Diagram MUST be attached. (Failure to submit diagram will result in non-issuance of permit).**
2.	**Event Flyer or Event Description MUST be attached. (Failure to submit flyer or event description will result in non-issuance of permit).**
3.	**Applicant MUST provide insurance coverage per City's requirements (see reverse)**
4.	Written permission from all residents of the effected portion of the street MUST be attached.
5.	No tables or other objects shall be placed on the street surface.
6.	No alcohol shall be consumed on the street or City right-of-way outside of a permitted area.
7.	Temporary No Parking Signs and barricades shall be supplied and posted by City Staff
8.	Affected street(s) shall remain accessible for emergency vehicles and local traffic at all times.
9.	This permit pertains only to the closing of the street(s). This permit does not relate to the type of activity, noise, or any other aspect of the event. All other applicable and appropriate ordinances and laws apply.

Permission is hereby granted to: REDLANDS ART ASSOCIATION

To close (street names) State St, between 6th & 7th Streets

Between (street names) 6th and 7th Streets

Day & date Mar 15, 2026 **Event times -** from (time) 7 ☒ am ☐ pm to (time) 6 ☐ am ☒ pm

Address of Applicant: 215 E State St 92373 Phone No: 909-273-4598

Signature of Applicant: Sandra Davies Applicant Name (print): SANDRA DAVIES

Condition(s);**set up & clean up time required:** included

Event Description: Outdoor art show/sale

FOR OFFICE USE ONLY

This permit must be signed by the Chief of Police in order to be valid.

1. _____ Chief of Police — Date: 1/12/26
2. _____ Municipal Utilities & Engineering Department — Date: 1/5/26
3. _____ Facilities & Community Services Department — Date: 1/5/26
4. _____ Risk Management Division — Date: 1/14/26

Street Closure time: From 6 ☒ am ☐ pm To 7 ☐ am ☒ pm

Staff Notes:

City Council Meeting **I. 13.**

DATE: 03/03/2026

TO: Honorable Mayor and City Council Members

SUBJECT: Approve the use of city resources and the request for in-kind support in the amount of $130,607.96 for the Redlands Bicycle Classic event hosted by Redlands Bicycle Classic, Inc., on April 9th through 12th, 2026; approve temporary street closures related to the event; authorize the sale and consumption of alcoholic beverages at the event, and determine that the event is categorically exempt from environmental review pursuant to Section 15311(c) of the State's guidelines implementing the California Environmental Quality Act (Facilities and Community Services Director Crocker)

MOTION(S):

If the City Council determines that staff's recommendations are appropriate, the following motions are provided:

1. I move that the City Council determine that the authorization for the items associated with the event are exempt from environmental review pursuant to Section 15311(c) of the State's guidelines implementing the California Environmental Quality Act; and

2. I move to authorize and approve the expenditure of city resources and in-kind support in the amount of $130,607.96;

3. I move to authorize and approve the temporary street closures as detailed in the staff report for the Redlands Bicycle Classic to be held on April 9th through April 12th, 2026; and

4. I move to authorize the sale and consumption of alcoholic beverages at the event.

RECOMMENDATION:

Staff recommends that the City Council direct staff accordingly related to the street closure requests and request for sale and consumption of alcoholic beverages for the Redlands Bicycle Classic event to be held April 9th through April 12th, 2026. Staff further recommends City Council direct staff accordingly concerning expenditure for personnel, equipment resources and waiver of fees for this event.

DISCUSSION:

The Facilities and Community Services Department manages the administration and issuance of permits for special events held in public areas of the City. Upon the issuance of a special event permit, the event may take place contingent on the event organizer paying the required fees. However, the City recognizes the value of partnering with non-profit agencies and organizations to provide services beneficial to the community. In an effort to support programs that provide a community benefit, the City Council will, from time to time, consider the authorization of in-kind support including the use of city equipment, staff, and facilities for special events.

The Redlands Bicycle Classic, Inc. is a registered non-profit organization based in the City of Redlands. They are requesting to host their annual Bicycle Classic event in Redlands on April 9th through the 12th, 2026. This will be their 40th year holding this event, and the Redlands Bicycle Classic, Inc. intends to provide a family-friendly event featuring different bicycle class races, rides, music, vendors, food and two beer gardens.

The Redlands Bicycle Classic, Inc. is requesting in-kind support in the amount of $130,607.96 for departmental resources, including Police, Fire and Facilities and Community Services (FCS) department personnel. According to the Bicycle Classic, Inc. application, they anticipate 30,000 attendees, with participation from more than 30 vendors. Vendors will be stationed on the upper level of the bi-level parking structure located on E. Citrus Ave, where the beer gardens will also be located. To facilitate this event, various streets will experience intermittent closures throughout the day. A detailed map of the street closures is attached to this report for further reference. The City Council previously approved $126,667.78 in in-kind support for last year’s 39th Bicycle Classic event, hosted on April 9th though 13th, 2025.

The event is exempt from the requirements of the California Environmental Quality Act’s guidelines pursuant to Section 15311(c). Section 15311(c), Accessory Structures Class 11 Facilities, which consists of the construction or replacement of minor structure accessory to existing commercial, industrial, or institutional facilities, including placement of seasonal or temporary use items

such as mobile food units, portable restrooms or similar items in generally the same locations from time to time in publicly owned parks or other facilities designed for public use.

ALTERNATIVES:

The City Council may elect to deny the request for in-kind support, and deny the request for temporary street closure and the sale and consumption of alcohol and direct staff accordingly.

STRATEGIC PLAN:

Priority A: Quality of Life, Beautification, Arts and Culture.

SUBMITTED BY:
Tabitha Crocker, Facilities and Community Services Director

REVIEWED BY:
Charles M. Duggan Jr., City Manager
Janice McConnell, Assistant City Manager
Christopher Boatman, Assistant City Manager
Danielle Garcia, Management Services/Finance Director

PREPARED BY:
Jaclyn Ramirez, Administrative Assistant II

Fiscal Impact

Fiscal Year:	FY 2025-26
Amount:	$130,607.96

Discussion:
Please see the "Fiscal Impact" attachment for reference.

Attachments

Special Event Packet
In-Kind Support Request
Event Maps
Event Schedule
Verification of Non-Profit
Street Closure Permit
Fiscal Impact

City of Redlands
35 Cajon Street, Ste. 222
Redlands, CA 92373
(909) 798-7655 ext 3

SPECIAL EVENTS PERMIT APPLICATION

EVENT: Redlands Bicycle Classic

ORGANIZER: Redlands Bicycle Classic, Inc

Date of Event: APRIL / 8-12 / 2026

Date Submitted: 1 / 5 / 2026



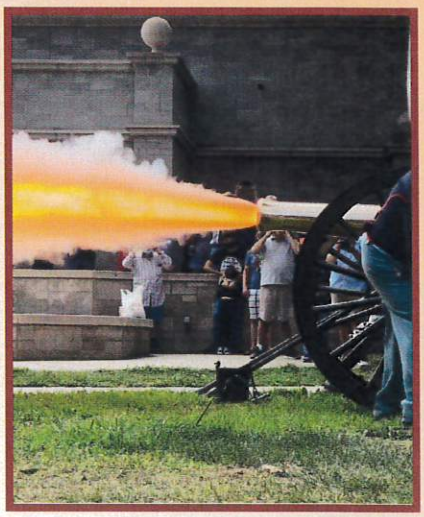

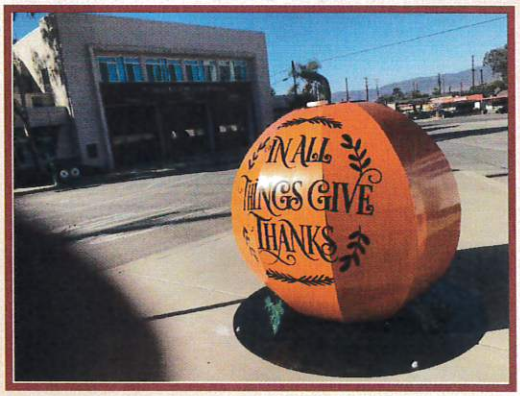

NOTICE TO PERMIT APPLICANT

- Completed Special Event Permit Applications **must** be submitted to the Facilities & Community Services Department a **minimum of four (4) months prior** to the date the event is scheduled to begin.
- All forms in this application package that are relevant to your event must be complete and submitted together in order to be considered.
- Applicants must conform to all requirements for maintaining liability insurance.
- Incomplete applications or applications submitted past the deadline are subject to denial of request to hold event.

SUMMARY OF EVENT

Event Title Redlands Bicycle Classic

Description

The Redlands Bicycle Classic is the longest continually running professional bicycle race in America. Entering its 40th year, the event brings together the community for a two-day event in downtown Redlands that offers a variety of different attractions for all ages. Public bicycle races, a vendor village, kids corner, local service clubs selling products to raise money for their charities, and many other fen and engaging events. Additionally, professional bicycle racers will race in downtown Redlands on Saturday afternoon and then on the Sunset loop on Sunday, with an exciting finish in downtown Redlands.

Date/Time

Setup	Date	4/10/2025	Time	Begin at 1700	Location(s)	Downtown
Event Starts	Date	4/11/2025	Time	0600	Location(s)	Downtown
Event Ends	Date	4/12/2025	Time	1800	Location(s)	Downtown
Dismantle	Date	4/12/2025	Time	Finish by 2100	Location(s)	Downtown

*Submit a Site Plan for each venue listed

Anticipated Attendance: Total 35,000 Per Day 20,000

Anticipated Participants: Total 500 Per Day Varies

CONTACTS Person(s) or Agent(s) responsible for and authorized to represent this event on all matters:

	Primary Contact:	Secondary Contact
Name:	Craig Kundig	Ed Purves
Address:	P.O. Box 7880	P.O. Box 7880
City, State, Zip	Redlands, CA 92375	Redlands, CA 92375
Phone:	951-990-4637	909-208-5352
Email:	craigkundig@gmail.com	epurves@redlandsclassic.com

Name of Organization: Redlands Bicycle Classic, Inc Is it Non-Profit? Yes

Tax I.D. #:

Yes	No	
◉	○	Is this an annual event? How many years have you been holding this event? 39
◉	○	Street Closure(s) requested? If yes, please complete Street Closure Permit Application and Barricade Rental Form in Appendix A
○	◉	Does this event involve a parade? Please complete Parade/Public Assemblies Permit Application form in Appendix A
◉	○	Will you be serving alcohol? If yes, please complete both Alcohol Permit forms in Appendix A
◉	○	Are you requesting use of the Prospect Park Sign? If yes, please complete the Sign Request form in Appendix A
◉	○	Are you requesting use of the City Stage? If yes, please complete the Show Mobile Rental form in Appendix A
◉	○	Vendor(s)? If yes please complete the Vendor List in Appendix A.

SITE PLAN

Your event site plan/route map should include but not be limited to:

- ❑ An outline of the entire event venue including the names of all streets or areas that are part of the venue and the surrounding area. If the event involves a moving route of any kind, indicate the direction of travel and all street or lane closures.
- ❑ The location of fencing, barriers and/or barricades. Indicate any removable fencing for emergency access.
- ❑ The provision of minimum twenty foot (20') emergency access lanes throughout the event venue.
- ❑ The location of first aid facilities and ambulances.
- ❑ The location of all stages, platforms, scaffolding, bleachers, grandstands, canopies, tents, portable toilets, booths, beer gardens, cooking areas, trash containers and dumpsters, and other temporary structures.
- ❑ A detail or close-up of the food booth and cooking area configuration including booth identification of all vendors cooking with flammable gases or barbecue grills
- ❑ Generator locations and/or source of electricity.
- ❑ Placement of vehicles and/or trailers.
- ❑ Exit locations for outdoor events that are fenced and/or locations within tents and tent structures.
- ❑ Identification of all event components that meet accessibility standards.
- ❑ A parking and/or shuttle plan for events that are likely to exceed parking lot capacity of the space you are using.
- ❑ Other related event components not listed above.

TIMELINE

Please provide a narrative and timeline of your event. You may provide this information as an attachment if necessary.

HOUR	ACTION
See attached timeline	

SECURITY PLAN

YES NO

❑ ❑ Have you hired a licensed professional security company to develop and manage your event's security plan? If yes, you are required to provide a copy of the security company's valid Private Patrol Operator's License issued by the State of California.

Security Organization Redlands Police Department

Address Street _____

City _____ State _____ Zip _____

Telephone Day _____ Evening _____ Fax _____ Pager/Cellular _____

Private Patrol Operator License# _____

Please describe your security plan including crowd control, internal security or venue safety, or attach the plan to this application. Redlands Police Department personnel are on scene throughout the event to help maintain order.

MEDICAL PLAN

Any event that has physical activity or is a race and has above 50 people requires amedical plan.

YES NO

❑ ❑ Have you hired a licensed professional emergency medical services provider to develop and manage your event's medical plan?

If yes, please list: _____

Medical Services Provider Redlands Fire Department and RBC Medical Staff

Address Street _____

City _____ State _____ Zip _____

Telephone Day _____ Evening _____ Fax _____ Pager/Cellular _____

Please describe your medical plan including your communications plan, the number, certification levels (MD, RN, Paramedic, EMT) and types of resources that will be at your event and the manner in which they will be managed and deployed. Your plan should include hours of setup and dismantle of medical aid areas. You may attach the plan to this application if necessary.

Redlands Fire Department personnel are on scene to deal with any medical emergencies that may arise.

ACCESSIBILITY PLAN

This checklist is intended to serve as a planning guideline and may not be inclusive of all City, County, State and Federal access requirements. You may attach more detailed information if necessary.

YES NO

- [x] [ ] Will there be a Clear Path of Travel throughout your event venue? Please describe _
- [ ] [x] Have you developed a Disabled Parking and/or Transportation Plan (including the use of public transportation or shuttle services) for your event? Please describe
- [x] [ ] Will a minimum of 10% of portable rest rooms at your event be accessible? Please describe
- [x] [ ] Will all food, beverage and vending areas be accessible? Please describe
- [ ] [x] Will all signage be provided in highly contrasting colors and placed so pedestrian flow will not obstruct its visibility? Please describe
- [ ] N/A [ ] If telephones are provided, will at least one telephone at each phone bank have a volume control and is hearing aid compatible? Please describe
- [x] [ ] If an information center is provided at your event will customer service representatives be available to assist disabled individuals? Please describe At the RBC booth
- [ ] [ ] If all areas of your event venue cannot be made accessible will maps or programs be made available to show the location of accessible rest rooms, parking, phones (if any), drinking fountains, and first aid stations? Please describe N/A

RESTROOM FACILITIES PLAN

You are required to provide portable rest room facilities at your event, unless you can substantiate the sufficient availability of both ADA accessible and non-accessible facilities in the immediate area of the event site which will be available to the public during your event. Indicate on your timeline when portable toilets will be set up.

Yes No

- [x] [ ] Do you plan to provide portable rest room facilities at your event?

If yes: Total number of portable toilets 29

If no: Please explain:

Rest Room Company White House Sanitation

Address Street 18916 Seaton Ave

City Perris State CA Zip 92570

Telephone Day 951-943-1550 Evening Fax Pager/Cellular

LIST OF VENDORS

Please provide a list of vendors, what they are there for and their business license numbers. Keep in mind that this list of vendors cannot change after the event has been approved. All must have a Redlands business license in order to participate with your event. If you need more entries, please attach a list with the same information to your event package. Vendors include all businesses either performing a service or selling at your event. All food concessioners must meet the San Bernardino Counties Department of Public Health Food Handler's and Fire Suppression requirements.

Yes	No	
☒	☐	Will items or services be sold at your event?
☒	☐	Will you have some education only (not selling a product or service) booths?
☐	☒	Will items or services sold at your event present unique liability issues (e.g. massage, etc.)?
☒	☐	Does your event include food concession and/or preparation areas?
☒	☐	Do you intend to cook food in the event area?

If yes, please specify method:

- ☒ Gas
- ☐ Electric
- ☐ Charcoal
- ☐ Other (specify) _____

VENDOR	SERVICE THEY ARE PROVIDING	REDLANDS BUSINESS LICENSE NUMBER	EDUCATIONAL INFORMATION ONLY? (Y/N)
VENDOR LIST WILL BE PROVIDED ONCE IT IS FINALIZED			

ENTERTAINMENT PLAN

YES NO

☒ ☐ Are there any musical entertainment features related to your event?

If yes, complete the following information or provide an attachment listing all bands/performers, type of music, sound check and performance schedule.

Number of Stages 1

Number of Performers/Bands 2

Performer/Band name and music type

☒ ☐ Will sound checks be conducted prior to the event?

If yes, Start time 11am Finish time 6pm

☒ ☐ Will sound amplification be used?

If yes, Start time 11am Finish time 6pm

☐ ☒ Do you plan to have a patron dance component to either live or recorded music at your event?

If yes, please describe

☒ ☐ Please describe the sound equipment that will be used for your event

Live band performing throughout the afternoon.

☐ ☒ Will inflatables, such as jumpers, or similar devices be used at your event?

If yes, please describe

☐ ☒ Does your event include the use of fireworks, rockets, lasers, or other pyrotechnics?

If yes, please fill out a fireworks permit also located in this packet.

If yes, please describe

☐ ☒ Will your event include the use of any signs, banners, decorations, or special lighting?

If yes, please describe

☐ ☒ Will there be massage activities at your event? If yes, please describe

☐ ☒ Do your event plans include any, drawings or raffle opportunities?

If yes, please describe

ALCOHOL

Please Note: You will need to have your alcohol permit approved by Redlands city council prior to your event. A copy of your Alcohol license will be needed after city council approval, before the event.

Yes No

☒ ☐ Does your event involve the use of alcoholic beverages?

If yes, please check all that apply:

- ☐ Free/Host Alcohol
- ☒ Alcohol Sales
- ☐ Host and Sale Alcohol
- ☒ Beer
- ☐ Beer and Wine
- ☐ Beer, Wine and Distilled Spirits

Please describe your security plan to ensure the safe sale or distribution of alcohol at your event.

Beer is available for purchase on the parking structure. Alcohol consumption is limited to the parking structure and on 6th Street, directly in front of that parking structure. This area is fully fenced and there are monitors at each exit to ensure no alcohol leaves the beer garden area.

MITIGATION OF IMPACT

YES NO

☒ ☐ Have you met with the residents, businesses, places of worship, schools and other entities that may be directly impacted by your event? If yes, please attach a complete list of these entities.

If no, please explain Residents are provided a mailer. All local downtown business impacted by the street closures and event are contacted by RBC staff in advance of the event.

☒ ☐ Do you have a sample of the notice that you propose to distribute two weeks prior to your event? If yes, please attach.

If no, please explain See attached

MARKETING AND PUBLIC RELATIONS

Yes No

☒ ☐ Will this event be marketed, promoted, or advertised in any manner?

f yes, please describe Extensive marketing and media outreach is conducted.

☐ ☒ Will there by live media coverage during the event?

f yes, please describe

☐ ☒ Will media vehicles be parked within the event venue?

f yes, please describe safety plan

☐ ☐ Do you have a plan to control or limit the placement and/or distribution of promotional signage, stickers, and other items?

f yes, please describe

INSURANCE REQUIREMENTS

Regardless of the event you are required to have insurance that indemnifies the city of Redlands listing the location date and time.

Name of Insurance Agency Edgewood Partners Insurance

Address Street P.O. Box 22375

City New York State NY Zip 10087-2375

Telephone Day Evening Fax Pager/Cellular

Contact Name Andrew Ondrejack

Policy Type Commercial General Liability, Business Auto, Inland Marine & Participant Accident

Policy Amount Varies

Policy Number SBCGL2725103, SBAUT0072603, SBIML0254703

AFFIDAVIT OF APPLICANT

I certify that the information contained in the foregoing application is true and correct to the best of my knowledge and belief that I have read, understand and agree to abide by the rules and regulations governing the proposed Special Event under the Redlands Municipal Code and I understand that this application is made subject to the rules and regulations established by the City Council and/or the City Manager or the City Manager's designee. Applicant agrees to comply will all other requirements of the City, County, State, Federal Government, and any other applicable entity which may pertain to the use of the Event venue and the conduct of the Event. In the event that a possessory interest subject to property taxation is created by virtue of this use permit, I agree to pay all possessory interest taxes and the City shall not be liable for the payment of such taxes I further agree that the payment of any such taxes shall not reduce any consideration paid to the City pursuant to this use permit. I agree to abide by these rules, and further certify that I, on behalf of the Host Organization, am also authorized to commit that organization, and therefore agree to be financially responsible for any costs and fees that may be incurred by or on behalf of the Event to the City of Redlands.

Print Name of Applicant/Host Organization Craig Kundig / Redlands Bicycle Classic, Inc

Title Communications Director

Signature Craig Kundig

Date 1/5/2026

Print Name of Professional Event Organizer Same

Title

Signature

Date

City of Redlands

In-Kind Support Request

Event Name: Redlands Bicycle Classic, Inc

Event Date(s): April 8-12, 2026 **Location(s):** Various locations (downtown, Sunset, etc)

Rain Out Date: None **Beginning Time:** 1700-April 10 **End Time:** 2100-April 12

Describe Your Request:

This completed form with all supporting documentation shall be submitted a minimum of 60 days prior to the scheduled event. Additional information may be attached to this application form, as needed.

The all volunteer board of the Redlands Bicycle Classic Committee respectfully requests city fees be supported in-kind for the 2026 Redlands Bicycle Classic. Please refer to the attached letter for specific information.

Select and Describe All City Provided Services That May Apply to Your Request :

- [x] Traffic (*Personnel, equipment, cones, barricades, no-parking* — 100 cones, 300 barricades, 15 signs
- [x] Police (*Public Safety Personnel*) — Thursday (4), Friday (5), Saturday (6), Sunday (15) plus volunteers
- [x] Fire (*Paramedics, Inspectors*) — Paramedics - Saturday (2) and Sunday (2). RBC will provide medical race staff.
- [ ] Parks (*Cleanup Personnel, Ball Field Lights*)
- [x] Facility — Parking structure located on Citrus Avenue between 5th and 6th street

Refuse/Recycling (*Event Receptacles, Roll-Off Service*) acquired by Event Organizers through Redlands Customer Service

Section 13.65 of the Redlands Municipal Code requires that events that serve more than 2,000 individuals per day will be required to submit for review and approval a Large Venue Recycling Plan. The Quality of Life Department may require smaller events to comply with City recycling practices as a condition of waiving fees.

- [x] Other — Use of city Showmobile stage from April 8-12.

Group/Organization Name: Redlands Bicycle Classic, Inc

Is your Group/Organization a Registered Non-Profit: [x] Yes [ ] No **Non-Profit Federal Tax ID Number:**

Does your Group/Organization Presently Have Liability Insurance? [x] Yes [ ] No

Please be advised that depending upon your request, you may be required to provide proof of insurance coverage in an amount determined by the City and naming the City as an additional insured.

Has your Group/Organization received fee waivers from the City in the past? Yes

Primary Contact Name & Title: Craig Kundig, Communications Director

Mailing Address: P.O. Box 7880 Redlands, CA 92375

Phone Number: (951) 990-4637 **E-Mail Address:** craigkundig@gmail.com

As a part of our commitment to fiscal responsibility, the City of Redlands gathers data associated with the economic and social benefits associated with in-kind support. Please provide estimates, as applicable, for your event.

Positive outcomes for your organization from this	This event provides local service clubs and organizations with an opportunity to raise funds for charity and brings revenue to local businesses and the city. The event also brings recognition to the city through its hosting of a world-renowned event.
Describe what economic benefit and impact this event will bring to the City:	With approximately 25,000 attendees, local businesses will see an increase in revenue. Spectators and participants will shop in local stores, dine in local restaurants and spend money throughout the city.

In April 2002, the City Council adopted Resolution No. 6038, which encourages groups or organizations requesting in-kind support from the City to use local businesses when procuring goods and services associated with the event. Receipts will need to be submitted through a follow up form. Failure to submit post event documentation (within 15 days) may affect future requests.

	Proposed Event	Previous Event Actuals	Vendors
Attendance: Redlands Residents	25,000	25,000	150
Attendance: Non-Residents	5,000	5,000	50
Food & Beverage Sales	N/A	N/A	$25k to service clubs
Merchandise Sales	$7500	$7500	$10,000+
Ticket/Entrance Fees	Free to spectators	Free to spectators	Expo rental fees - $10,000
Other	N/A	N/A	N/A
Total Revenue	All funds are used	for future year's events	$35,000

I certify that all statements on this application are true and complete to the best of my knowledge.

Signature: [signature] **Title:** Communications Director

Please Print Your Name: Craig Kundig **Date:** 1/5/2026

To Be Completed by the City of Redlands

Date Received: 01/05/2026 **Received By:** [signature]

Notes:

City Manager Approval: City Council Approval:

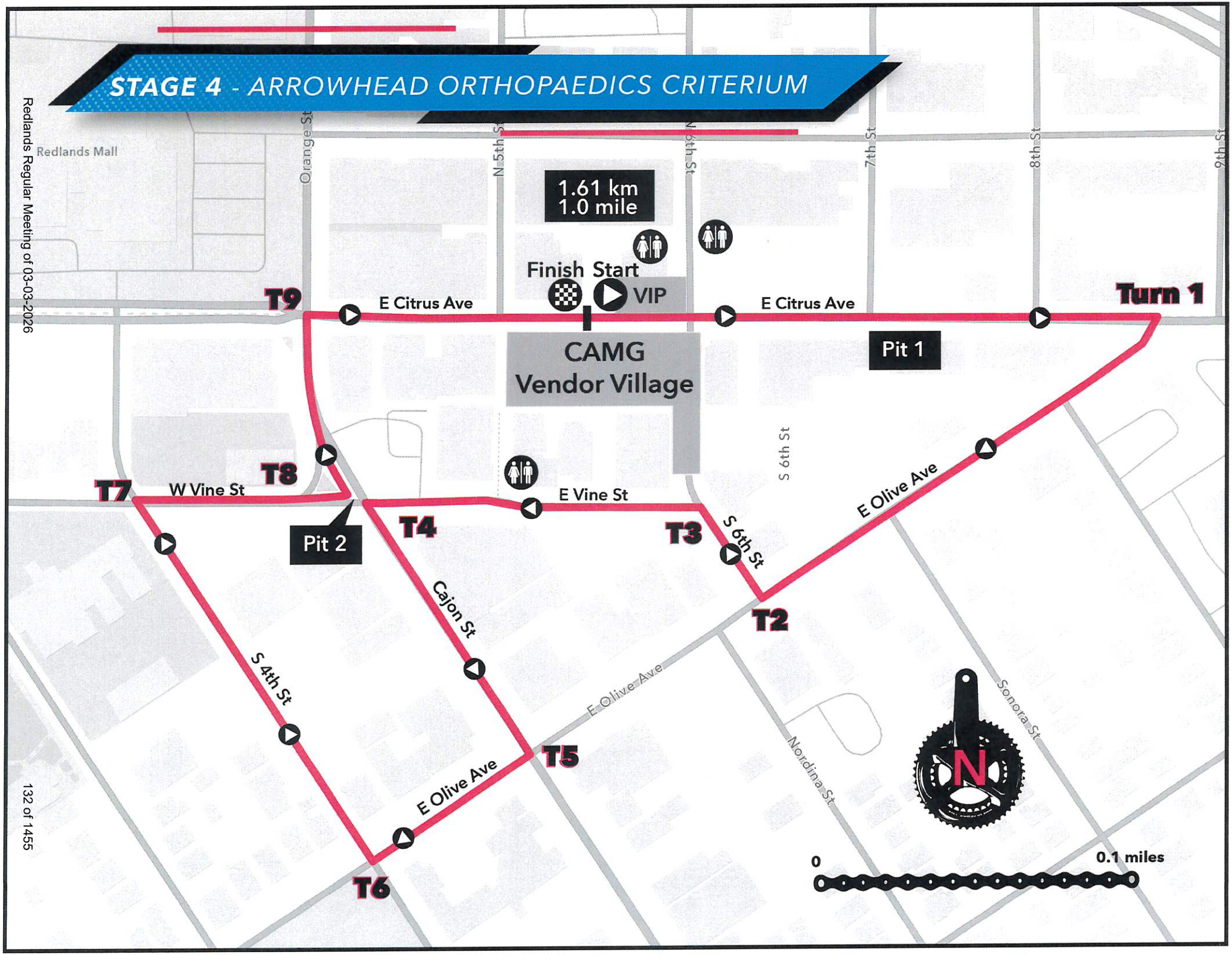
STAGE 4 - ARROWHEAD ORTHOPAEDICS CRITERIUM
Redlands Mall
Orange St
N 5th St
N 6th St
7th St
8th St
9th St
1.61 km
1.0 mile
Finish
Start
VIP
T9
E Citrus Ave
E Citrus Ave
Turn 1
CAMG
Vendor Village
Pit 1
S 6th St
T8
T7
W Vine St
E Vine St
Pit 2
T4
T3
S 6th St
E Olive Ave
T2
Cajon St
S 4th St
E Olive Ave
E Olive Ave
T5
Nordina St
Sonora St
N
T6
0
0.1 miles

STAGE 5 - COMMUNITY ALLIANCE MEDICAL GROUP SUNSET ROAD RACE FOR MEN

Map 1 of 2

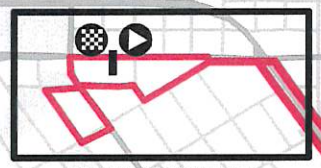

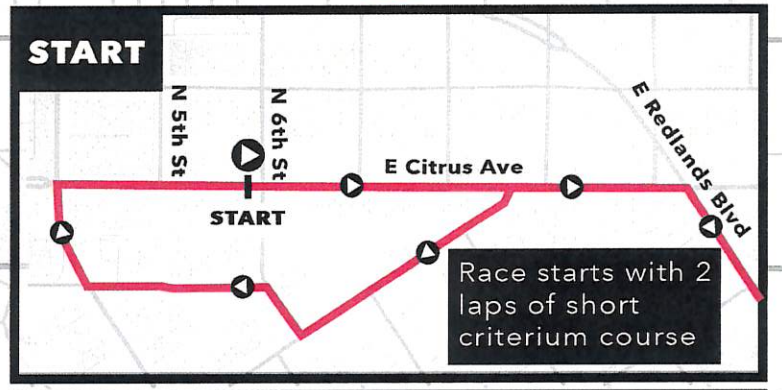

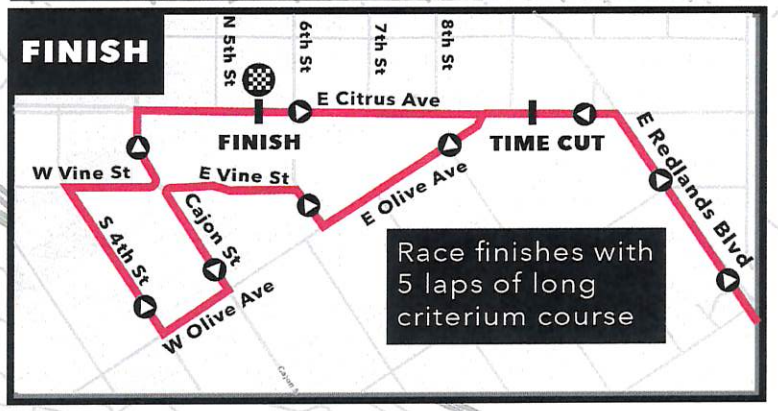



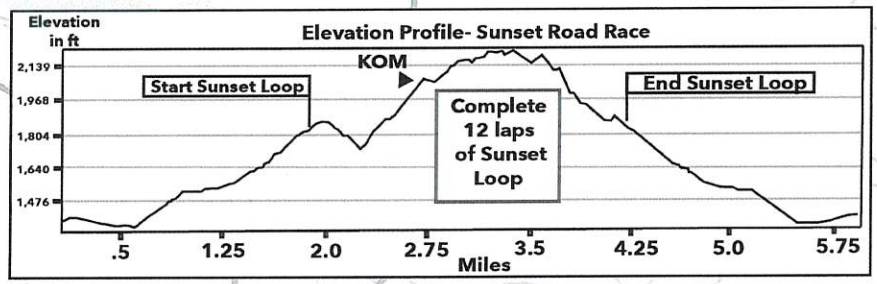

STAGE 5 - SUNSET ROAD RACE LOOP DETAIL

Map 2 of 2

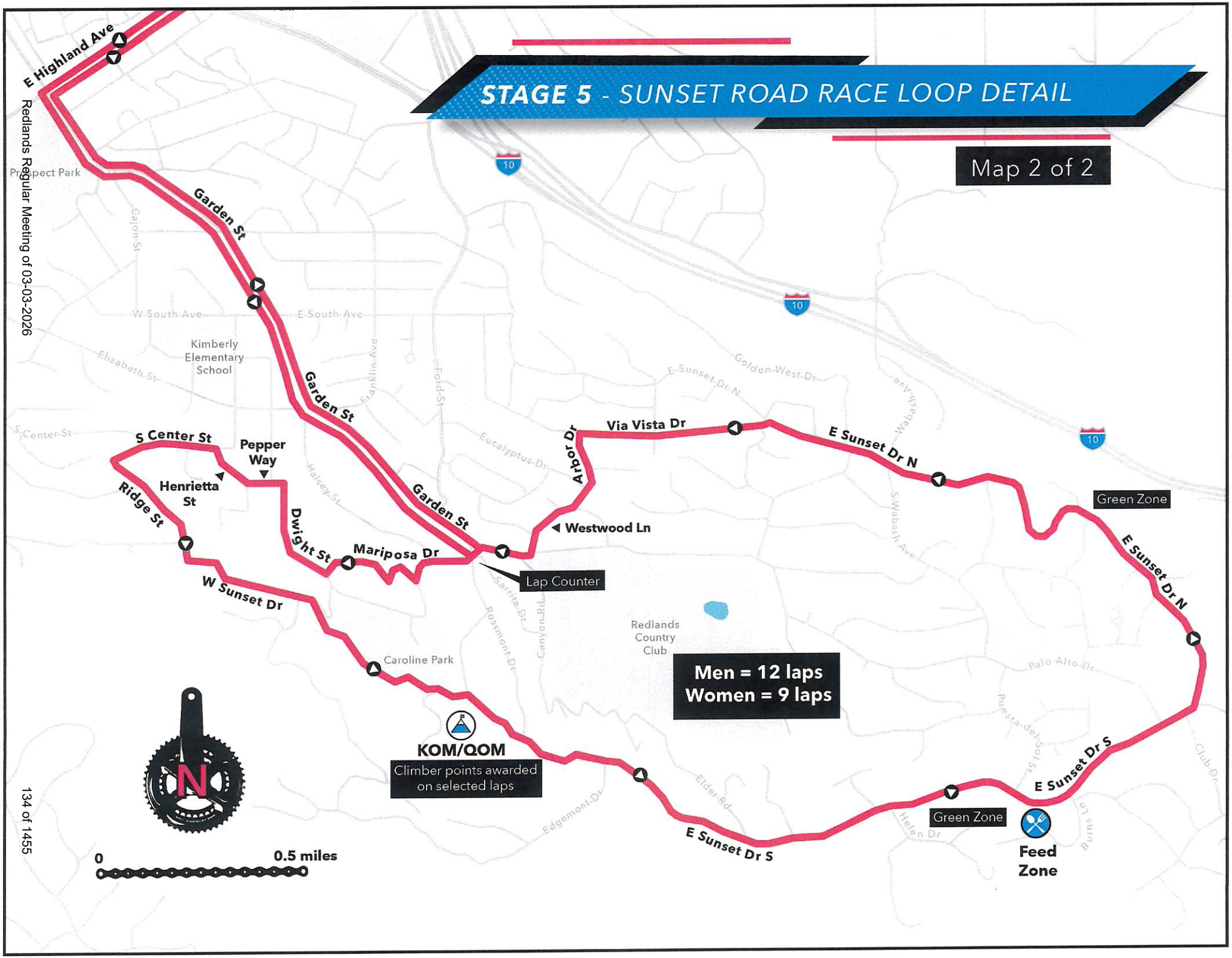

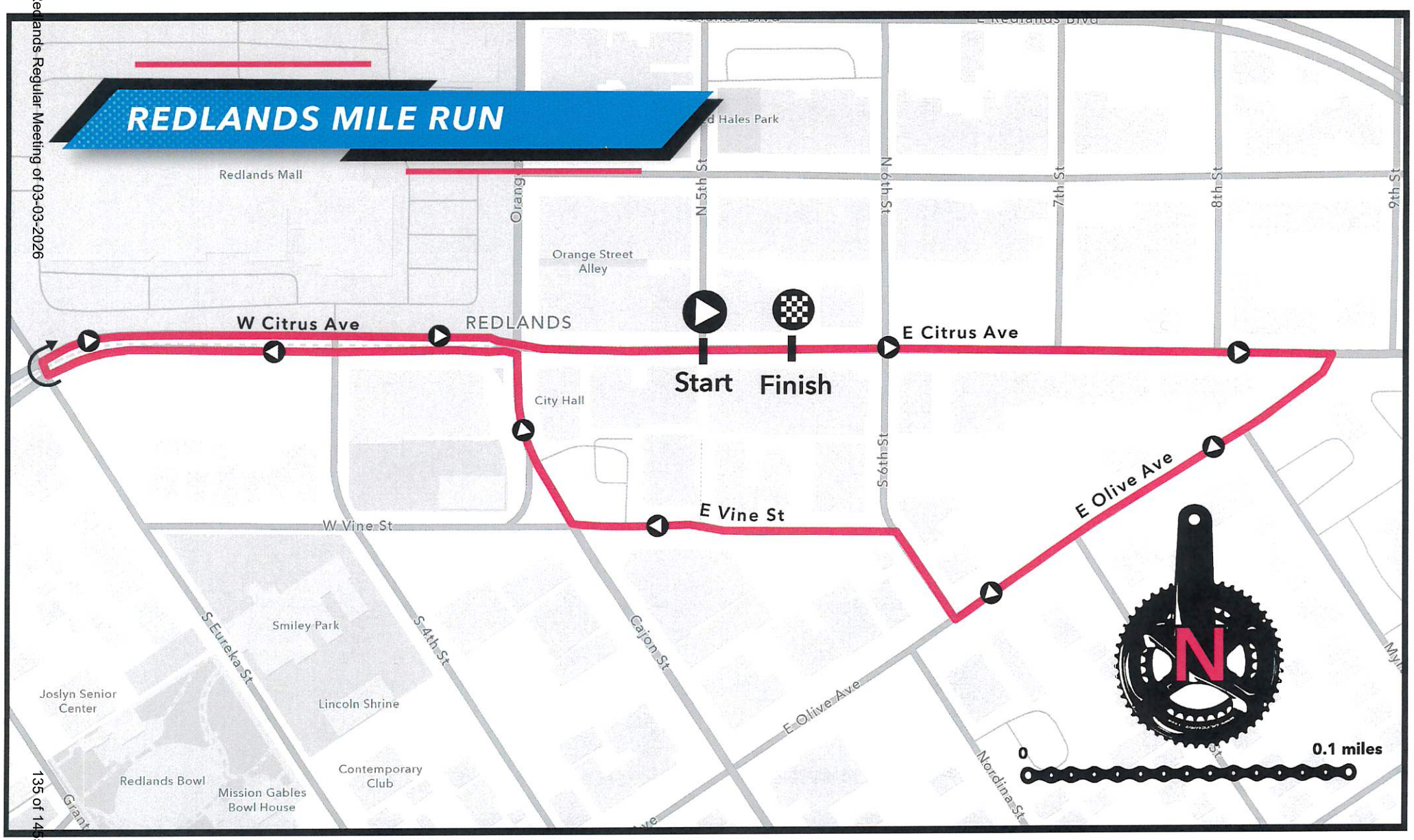
REDLANDS MILE RUN
Redlands Mall
Orange Street Alley
N 5th St
N 6th St
7th St
8th St
9th St
W Citrus Ave
REDLANDS
E Citrus Ave
Start
Finish
City Hall
E Vine St
W Vine St
S 6th St
E Olive Ave
Smiley Park
S Eureka St
S 4th St
Cajon St
Joslyn Senior Center
Lincoln Shrine
Redlands Bowl
Mission Gables Bowl House
Contemporary Club
Nordina St
N
0
0.1 miles

2026 PRELIMINARY SCHEDULE OF EVENTS

Tuesday, April 7

BC Fitness Studio, 409 E Palm Avenue, Redlands

11:00 am – 2:00 pm	Stage Race Registration for Men and Women	
3:00 pm	Managers Meeting for Women	
4:00 pm	Managers Meeting for Men	
5:30 pm	USAC Driver Class for Caravan drivers	

Wednesday, April 8

Lake Perris Recreation Area, Start on north end of Perris Dam, Finish on Alta Calle Road

10:30 am	**Stage 1 – Lake Perris Time Trial for Women**	**11.2 miles**
12:30 pm	**Stage 1 – Lake Perris Time Trial for Men**	**11.2 miles**

Thursday, April 9

Start at Hangar 24 on Sessums Drive, Finish on Hwy 38 at Onyx Summit

9:30 am	**Stage 2 – Onyx Summit Road Race for Men**	**75.5 miles**
10:45 am	**Stage 2 – Onyx Summit Road Race for Women**	**56.1 miles**

Friday, April 10

Start/Finish Line on Sand Canyon Road, north of Crafton Hills Drive

8:30 am	**Stage 3 – Crafton Hills Circuit Race for Women**	**9 laps, 41.4 miles**
10:45 am	**Stage 3 – Crafton Hills Circuit Race for Men**	**12 laps, 55.2 miles**
1:20 pm	**Stage 1 – Circuit Race for Men Juniors/Women Juniors**	**7/5 laps, 32.2/23.0 miles**

Saturday, April 11

Start/Finish Citrus Avenue, Downtown Redlands

6:30 am	Registration opens for Legends' Fondo	
7:00 am	Registration opens for Stater Bros. Charities Public Races with School Duel	
8:00 am	Legends' Fondo start – 71, 63 miles	
8:05 am	Legends' Fondo start – 41, 22 miles	
8:15 am	Stater Bros. Charities Public Races with School Duel	
12:20 pm	**Stage 2 – Criterium for Women Juniors**	**1 mile course (35 minutes)**
1:05 pm	**Stage 2 – Criterium for Men Juniors**	**1 mile course (45 minutes)**
2:05 pm	Flag Ceremony and National Anthem	
2:20 pm	**Stage 4 – Criterium for Women**	**1 mile course (75 minutes)**
4:00 pm	**Stage 4 – Criterium for Men**	**1 mile course (90 minutes)**

Sunday, April 12

Start/Finish Citrus Avenue, Downtown Redlands

5:30 am	Registration opens for Redlands Downtown Runs, Criteriums	
7:00 am	5k Run / Family Fun Walk (till 8:00 am)	3 laps of 1.0 mile modified course
8:15 am	**Stage 3 – Criterium for Men Juniors (17/18)**	**0.65 mile course (45 minutes)**
9:10 am	**Criterium for U16 Juniors**	0.65 mile course (30 minutes)
10:00 am	**Stage 5 – Sunset Road Race for Women**	**9 laps, 68.1 miles**
10:05 am	Redlands 1 mile Dash for Cash	1.0 mile modified course
10:20 am	Criterium for Women Pro, 1-3 (non-stage)	0.65 mile course (45 minutes)
11:15 am	Criterium for Women Novice/Cat 4/Juniors 15/16	0.65 mile course (35 minutes)
12:00 pm	Criterium for Men Novice (Cat 5)/Juniors 15/16	0.65 mile course (35 minutes)
2:00 pm	**Stage 5 –Sunset Road Race for Men**	**12 laps, 91.1 miles**
2:10 pm	Criterium for Men Masters 40+ (Cat 1-4)	0.65 mile course (45 minutes)
3:05 pm	Criterium for Men Cat 3 / 4	0.65 mile course (45 minutes)
4:00 pm	Criterium for Men Pro, 1, 2 (non-stage)	0.65 mile course (75 minutes)

INTERNAL REVENUE SERVICE
P. O. BOX 2508
CINCINNATI, OH 45201

DEPARTMENT OF THE TREASURY

Date: [illegible] 14 2012

REDLANDS BICYCLE CLASSIC INC
PO BOX 7880
REDLANDS, CA 92375

Employer Identification Number:

DLN:
17053004307002
Contact Person:
PAUL F CAPPEL II ID# 31665
Contact Telephone Number:
(877) 829-5500
Accounting Period Ending:
June 30
Form 990 Required:
Yes
Effective Date of Exemption:
December 30, 2011
Contribution Deductibility:
No
Addendum Applies:
Yes

Dear Applicant:

We are pleased to inform you that upon review of your application for tax-exempt status we have determined that you are exempt from Federal income tax under section 501(c)(4) of the Internal Revenue Code. Because this letter could help resolve any questions regarding your exempt status, you should keep it in your permanent records.

Please see enclosed Publication 4221-NC, Compliance Guide for Tax-Exempt Organizations (Other than 501(c)(3) Public Charities and Private Foundations), for some helpful information about your responsibilities as an exempt organization.

Contributions to you are not deductible by donors under section 170(c)(2) of the Code.

We have sent a copy of this letter to your representative as indicated in your power of attorney.

Sincerely,

Holly O. Paz
Director, Exempt Organizations
Rulings and Agreements

Enclosure: Publication 4221-NC

Letter 948 (DO/CG)

REDLANDS BICYCLE CLASSIC INC

Based on the information submitted with your application, we approved your request under Notice 2011-44 and the effective date of exemption is December 30, 2011, the postmark date of your application.

Letter 948 (DO/CG)

Event: Redlands Bicycle Classic Date: 4/8/26 - 4/12/26

PERMIT TO CLOSE STREET FOR SOCIAL EVENT(S)

Permission to close a street for an event is subject to the following requirements:

1.	**Street Closure Diagram MUST be attached. (Failure to submit diagram will result in non-issuance of permit).**
2.	**Event Flyer or Event Description MUST be attached. (Failure to submit flyer or event description will result in non-issuance of permit).**
3.	**Applicant MUST provide insurance coverage per City's requirements (see reverse)**
4.	Written permission from all residents of the effected portion of the street MUST be attached.
5.	No tables or other objects shall be placed on the street surface.
6.	No alcohol shall be consumed on the street or City right-of-way outside of a permitted area.
7.	Temporary No Parking Signs and barricades shall be supplied and posted by City Staff
8.	Affected street(s) shall remain accessible for emergency vehicles and local traffic at all times.
9.	This permit pertains only to the closing of the street(s). This permit does not relate to the type of activity, noise, or any other aspect of the event. All other applicable and appropriate ordinances and laws apply.

Permission is hereby granted to: Redlands Bicycle Classic, Inc.

To close (street names) various streets per attached

Between (street names) various streets per attached

Day & date 04/08-4/12 **Event times -** from (time) 5pm ☐ am ☐ pm to (time) 4/12/25 @ 9 ☐ am ☑ pm

Address of Applicant: P.O. Box 7880 Redlands, CA 92374 Phone No: 951-990-4637

Signature of Applicant: Craig Kundig Applicant Name (print): Craig Kundig

Condition(s);**set up & clean up time required:** All traffic and road closures to be coordinated with/by the Redlands Police Department.

Event Description: Redlands Bicycle Classic / Professional bicycle race, community event, public events.

FOR OFFICE USE ONLY

This permit must be signed by the Chief of Police in order to be valid.

1. _____ Chief of Police — Date 1/12/26
2. _____ Municipal Utilities & Engineering Department — Date 1/12/26
3. _____ Facilities & Community Services Department — Date 1/6/26
4. _____ Risk Management Division — Date 1/27/26

Street Closure time: From 4/9 3 ☐ am ☒ pm To 4/12 10 ☐ am ☒ pm

Staff Notes:

SOME STREET CLOSURES WILL BE INTERMITENT BASED ON SPECIFIC ROUTE NEEDS

In anticipation of the City Council's consideration of this request, staff has compiled the following table outlining costs related to fees established by Resolution of the City Council and departmental charges pertaining to personnel and equipment resources necessary for the support of the event. The departmental charges are costs outside of normal City operations that would not be incurred by the City if the special event was not taking place.

Departmental Charges (Personnel & Equipment)	**2025-2026 Amount**	**Type**	**2024-2025 Amount**
Police Personnel[1]	$107,112.00	Hard Cost	$104,480.00
Fire Personnel[1]	$14,169.74	Hard Cost	$8,730.28
Facilities & Community Services Personnel[1]	$5,700.00	Hard Cost	$2,362.50
Personnel & Equipment Subtotal	**$126,981.74**		**$115,572.78**
Fees Established by City Council Resolution			
Park Reservation	$0.00	Soft Cost	$0.00
FCS Equipment	$2,056.34	Soft Cost	$695.00
Fire Equipment	$1,569.88	Soft Cost	$784.94
Fees Subtotal	**$3,626.22**		**$1,479.94**
Total Departmental Charges and Fees	**$130,607.96**		**$117,052.72**
	$126,981.74 **$3,626.22** **$130,607.96**	Hard Cost Soft Cost Total	**$115,572.78** **$1,479.94** **$117,052.72**

[1]*Personnel costs are calculated conservatively assuming the highest staff cost scenario. Actual costs may vary on the day of the event based on the actual staff present. Actual costs will be confirmed following the event and will be included in a reconciliation report presented to the City Council.*

The following table summarizes the total estimated costs associated with the use of City resources and waiver of fees approved for events scheduled during Fiscal Year 2025-26 to date:

TABLE 2: FY 2025-26 Fee Waivers to date

Hard Costs	**Soft Costs**	**Deposits Refunded**	**Waiver Amount**	**Net Amount**
$332,856.19	$37,641.85	$0.00	$370,498.04	$370,498.04

City Council Meeting **I. 14.**

DATE: 03/03/2026

TO: Honorable Mayor and City Council Members

SUBJECT: Approve a License Agreement with Fortino Vizcaino, dba 4Tinos, to operate a food truck at the City's Corporate Yard and determine that approval of the agreement is exempt from environmental review pursuant to Section 15301 of the State's guidelines implementing the California Environmental Quality Act (Facilities and Community Services Department Director Crocker)

MOTION(S):

If the City Council determines that staff's recommendation is appropriate, the following motions are provided:

1. I move to determine that approval of the License Agreement with Fortino Vizcaino, dba 4Tinos, is exempt from environmental review pursuant to Section 15301 of the California Environmental Quality Act Guidelines; and

2. I move to approve the License Agreement with Fortino Vizcaino, dba 4Tinos, to operate a food truck at the City's Corporate Yard.

RECOMMENDATION:

Staff recommends that the City Council approve the License Agreement with Fortino Vizcaino, dba 4Tinos, to operate a food truck within an outdoor dining area located at the City's Corporate Yard, 1270 W. Park Avenue, and determine that approval of the project is categorically exempt from further environmental review pursuant to Section 15301 of the California Environmental Quality Act Guidelines.

DISCUSSION:

The City of Redlands Corporate Yard provides alternative fuel to customers seven days a week. It is also a significant revenue source for the City, generating approximately $1.1 million in sales annually. As part of the City's ongoing efforts to retain existing and attract new fuel sales customers, multiple projects have been undertaken to enhance the area's curb appeal, create a

pedestrian-friendly environment, and provide additional revenue-generating opportunities.

Fortino Vizcaino, the owner of 4Tinos, has operated throughout the City of Redlands for the past 15 years. The Agreement will allow the operation of a food truck within a 324 square foot outdoor dining area located at the Corporate Yard. Per the License Agreement, Mr. Vizcaino will maintain this area and ensure compliance with all applicable laws. The Agreement requires a monthly rent of $500, which is based on appraisals conducted for similar outdoor areas in the City that were also licensed for outdoor dining purposes. The term of the agreement is for one year and includes the option to cancel anytime with a 30-day notice from either party.

Staff followed the City's procurement protocol by preparing a Request for Proposal (RFP) to provide Food Truck Services.
Nineteen vendors were solicited, and two proposals were received on November 19, 2025. Following review and evaluation by the City's Screening and Selection Committee, the proposals were ranked as follows:

Firm	Responsible Proposer	Responsive Proposer	Rank
4Tinos, Redlands, CA	X	X	1
Salvacion Santana, Rancho Cucamonga, CA	X	X	2

Fortino Vizcaino, dba 4Tinos, received the highest overall ranking. Staff negotiated final pricing and contract terms with Fortino Vizcaino, dba 4Tinos, consistent with the proposal and the City's procurement requirements.

Staff recommends that the License Agreement is categorically exempt from the requirements of the California Environmental Quality Act guidelines pursuant to Section 15301. This section pertains to existing facilities and applies when there is no resulting expansion of use. The project is consistent with this exemption as it is within a developed portion of the corporate yard and will primarily service existing customers of the fuel island.

ALTERNATIVES:

The City Council may elect not to approve the License Agreement.

STRATEGIC PLAN:

Not applicable.

SUBMITTED BY:
Tabitha Crocker, Facilities and Community Services Department Director

RECOMMENDED BY:
Charles M. Duggan Jr., City Manager

REVIEWED BY:
Yvette M. Abich Garcia, City Attorney
Janice McConnell, Assistant City Manager
Christopher Boatman, Assistant City Manager
Danielle Garcia, Management Services/Finance Director

PREPARED BY:
Larry Alms, Fleet Services Supervisor

Fiscal Impact

Fiscal Year:	FY 2025-26
Revenue Generating:	Yes
Amount:	$6,000
Account No.:	607900

Discussion:

The License Agreement will provide monthly revenue in the amount of $500.00 per month or $6,000.00 annually, which will be deposited into the General Fund.

Attachments

License Agreement

LICENSE AGREEMENT BY AND BETWEEN THE CITY OF REDLANDS AND FORTINO VIZCAINO DOING BUSINESS AS "4TINOS"

This License Agreement ("Agreement") is made and entered into this 3rd day of March, 2026 ("Effective Date"), by and between the City of Redlands, a municipal corporation and general law city ("City"), and Fortino Vizcaino, an individual dba 4Tinos ("Licensee"). City and Licensee are sometimes individually referred to herein as a "Party" and, together, as the "Parties."

RECITALS

WHEREAS, Licensee is the owner and operator of a food truck commonly known as 4Tinos, located at the City of Redlands' Corporate Yard, 1270 W. Park Avenue, ("Corporate Yard") and is licensed and permitted to operate in the City of Redlands; and

WHEREAS, City is the owner in fee simple of the Corporate Yard particularly described in Exhibit "A" attached hereto and incorporated by reference herein; and

WHEREAS, Licensee desires to establish an outdoor dining venue within the Corporate Yard; and

WHEREAS, City and Licensee desire to cooperate to further the above-stated purpose in a way compatible with the public interest;

NOW, THEREFORE, in consideration of the mutual promises contained herein, City and Licensee agree as follows:

AGREEMENT

Section 1. Premises. City hereby grants to Licensee a revocable, non-exclusive license to operate a food truck and provide outdoor dining services in connection with the operation of the food truck at the Corporate Yard (the "License"). The outdoor dining area subject to this Agreement consists of approximately three hundred twenty-four (324) square feet (the "Premises") As described and set forth in Exhibit "A," titled Corporate Yard.

Section 2. Acknowledgment of License and Disclaimer of Tenancy.

A. Licensee acknowledges and agrees that City is the owner of Premises and that nothing in this License grants to Licensee any rights, title, or interest in the Premises, except for the revocable, non-exclusive right to use the Premises as provided in this License. Licensee is not a tenant or lessee of City and holds no rights of tenancy or leasehold in relation to the Premises.

B. In consideration of City's grant of this License, Licensee specifically and expressly waives, releases, and relinquishes any and all rights to assert any claim of right, privilege or interest in the Premises other than the rights expressly granted by this License.

C. The consideration paid by Licensee pursuant to Section 4 of this Agreement is consistent with the value of the rights comprising the License privilege; the consideration is not

consistent with the higher market value for a greater right, privilege, or interest (such as a lease) in the Premises.

D. Licensee further acknowledges and agrees that without the representations and agreements set forth herein, City would not enter into this Agreement.

Section 3. Term. The term of this Agreement shall commence on March 3, 2026, and end on March 3, 2027, unless earlier terminated as provided for herein. Either Party may terminate this Agreement by providing written notice of such termination to the other Party at least thirty (30) days prior to the noticed termination date. Upon termination or expiration of this License, and upon request of Licensor, Licensee shall remove, as requested by Licensor, any improvements, fixtures, equipment and other personal property placed upon the Premises by Licensee. The cost and expense of such removal, together with the repair of any damage, occasioned thereby, will be borne solely by the Licensee. If Licensee remains in possession ofthe Premises after expiration or earlier termination of this Agreement without City's written consent, Licensee's continued occupancy of the Premises shall be equivalent to a tenancy at sufferance and Licensee shall pay an increased License fee during the holdover period in the sum of one thousand dollars ($1,000) per month.

Section 4. License Fee. Licensee shall pay to City a monthly fee in the sum of five hundred dollars ($500.00) for use and occupancy of the Premises. All subsequent monthly fee payments shall be made on or before the second day of each month for which the fee is then due. All payments are to be made payable to the City of Redlands, Finance Department/Revenue Division, P.O. Box 3005, Redlands, California, 92373. A late fee of fifty dollars ($50) shall be added and due for any fee payment made after the tenth day of the month.

Section 5. Security Deposit. The security deposit shall be retained by City in compliance with the terms and conditions of this Agreement, and shall be refunded to Licensee within thirty (30) days after the Premises have been vacated by Licensee, less any amounts reasonably necessary to pay City for, (i) cleaning costs, (ii) cost for repair or damages to the Premises exclusive of ordinary wear and tear, and (iii) any other amount legally allowable under the provisions of this Agreement. A written accounting of said costs and damages shall be presented to Licensee within ten (10) days of the Premises being vacated. If the security deposit is insufficient to pay City for such costs and damages, Licensee shall immediately pay any additional costs for damages demanded by City.

Section 6. Use of Premises.

A. Licensee shall use the Premises solely for the purpose of outdoor dining associated with Licensee's operation of its hot dog food truck and no other uses.

B. The hours of operation for the Premises shall be limited to 6:00 a.m. to 5:00 p.m., Monday through Friday.

C. Licensee's use of the Premises shall not jeopardize or endanger the health, welfare, peace, or safety of persons visiting, residing, working, or conducting business in the surrounding area.

D. During the term of this License, Licensee shall comply with all applicable federal, state, and local laws, and all applicable rules and regulations established by City.

E. Licensee shall require all customers to vacate the Premises upon closure of its outdoor dining area at 5:00 p.m.

F. Licensee shall not serve alcohol on the Premises.

G. Licensee's operation of the Premises shall not result in nuisance activities within the Premises or in close proximity of the Premises, including but not limited to disturbance of the peace, illegal drug activity, public drunkenness, drinking in public, harassment of passersby, gambling, prostitution, sale of stolen goods, public urination, theft, assaults, batteries, acts of vandalism, littering, loitering, graffiti, illegal parking, excessive loud noises especially in the late night or early morning hours, traffic violations, curfew violations, lewd conduct, or police detentions and arrests.

H. Licensee shall ensure that the Premises' upkeep and operating characteristics are compatible with, and will not adversely affect, the livability or appropriate development of abutting properties and the surrounding neighborhood.

I. Licensee hereby grants City immediate access to the Premises in the event of an emergency, which is defined as any incident that threaten loss of life or property, interruptions of public utilities, disaster, war, acts of terrorism, strikes or similar emergencies.

Section 7. As-Is Condition. Licensee accepts the Premises in its "as-is" condition as of the Effective Date of this Agreement, without any warranty, express or implied.

Section 8. Maintenance of Premises. Licensee shall be responsible for maintaining the Premises in a clean and orderly state. Any damage to the Premises incurred due to Licensee's use of the Premises shall be the sole responsibility of Licensee. City shall have the right to enter the Premises, at reasonable times, for inspection and maintenance purposes. Should an inspection by City disclose the need for maintenance or repairs, City shall provide Licensee with written notice of the items requiring repair or maintenance. If action is not taken on such items by Licensee within five (5) days from the provision of such notice, City may enter the Premises and take whatever action is necessary to perform such maintenance or repairs at Licensee's expense.

Section 9. Indemnity. Licensee shall defend, indemnify and hold harmless City, and its elected officials, officers, employees and agents, from and against any and all claims, causes of action, damages and liability resulting from Licensee's negligent acts or omissions, and willful misconduct of Licensee, and its contractors, agents, employees, guests and invitees arising from Licensee's occupation and use of the Premises or the improvements and equipment thereon during the term of this Agreement. This section shall survive any termination of this Agreement.

Section 10. Public Liability and Property Damage Insurance; Workers' Compensation Insurance. Licensee shall maintain at its own cost for the term of this Agreement, public liability and property damage insurance in the amount of one million dollars ($1,000,000) per occurrence and two million dollars ($2,000,000) in the aggregate, issued by an insurance company acceptable to City. Licensee shall provide City with a certificate of insurance and endorsements showing City

as an additional insured on the policy prior to Licensee's use and occupancy of the Premises. Such insurance shall be primary with respect to City and non-contributory to any insurance or self-insurance maintained by City. The policy shall require that, before amending or canceling the policy, the issuing insurance company shall give City at least thirty (30) days prior written notice. City and Licensee acknowledge and agree that the insurance required of Licensee is subject to annual review by City and subject to increases in the amount and scope of coverage, as reasonably determined by City.

Licensee shall procure and maintain Worker's Compensation Insurance in such amount as will fully comply with the laws of the State of California, and which shall indemnify, insure and provide legal defense for both Licensee and City against any loss, claim or damage arising from injuries or occupational diseases happening to any worker employed by Licensee in, at or about the Premises.

Section 11. Assignment Prohibited. Licensee shall not encumber, assign, sublease or otherwise transfer this Agreement, or any right or interest therein, without the prior written consent of City. Any such encumbrance, assignment, sublease or transfer without such prior consent and approval of City shall constitute a breach of this Agreement and may, at the sole discretion of City, result in the immediate termination of this Agreement.

Section 12. Attorneys' Fees. In the event any action is commenced to enforce or interpret the terms or conditions of this Agreement, the prevailing Party shall, in addition to any costs and other relief, be entitled to the recovery of its reasonable attorneys' fees, including fees for use of in-house counsel by a Party.

Section 13. Notices. Any notice or other communication required, or which may be given, pursuant to this Agreement, shall be in writing. Any such notice shall be deemed delivered on the date of delivery in person; (ii) five (5) days after deposit in first class registered mail, with return receipt requested; (iii) on the actual delivery date if deposited with an overnight courier; or (iv) on the date sent by facsimile or electronic mail transmission (including PDF), if confirmed with a copy sent contemporaneously by first class, certified, registered or express mail; in each case properly posted and fully prepaid to the appropriate address set forth below, or such other address as a Party may provide notice in accordance with this section:

CITY:	LICENSEE:
City Clerk	Fortino Vizcaino dba 4Tinos
City of Redlands	13662 Dogwood Tr
35 Cajon Street	Yucaipa, CA 92399
P.O. Box 3005 (mailing)	fvizc68@gmail.com
Redlands, CA 92373	909-816-3960
jdonaldson@cityofredlands.org	
909-798-7531	

Section 14. Entire Agreement/Amendment. This Agreement constitutes the entire agreement between the Parties with respect to the subject matter hereof. Any prior verbal or written representations or agreements respecting the Premises not expressly set forth herein are null and

void. Any and all amendments to this Agreement shall be in writing and executed by the Parties.

Section 15. Termination. City shall have the right to terminate this License, with or without cause, upon thirty (30) days prior written notice to Licensee. City shall have no liability for any claims or damages resulting to Licensee as a result of any exercise by City of its right to terminate this License. This License may be terminated at the discretion of City should Licensee fail to fulfill its requirements as specified herein.

Section 16. Waiver. No waiver by either Party of any provision of this Agreement, or waiver of any breach of this Agreement, shall be deemed to be a waiver of any other provision of this Agreement, or of any subsequent breach by either Party of the same or any other provision of this Agreement.

Section 17. Hazardous Materials. Licensee agrees that it will not allow or permit the use, storage, disposal or release on or about the Premises other improvements thereon of any Hazardous Materials by its officers, agents, contractors, employees, guest or invitees. As used herein, "Hazardous Materials" means any flammable explosives, radioactive materials, asbestos, PCB's, hazardous waste, toxic substances or any other "hazardous substances", "hazardous materials" or "toxic substances" as defined in any present or future federal, state or local law applicable to Premises or the improvements thereon, and the rules and regulations adopted or promulgated under or pursuant to the foregoing laws.

Section 18. Breach and Default by Licensee.

A. All covenants and agreements contained in this License are declared to be conditions of this License, and to the term for which the Premises are licensed to Licensee.

B. Should Licensee fail to perform or comply with any covenant, condition or agreement contained in this License (a "Default"), which by its nature is reasonably and practically subject to cure, and the Default is not cured within fifteen (15) days after written notice of the Default is served on Licensee by City, then Licensee shall be in breach of this License.

C. If the default is one which the Parties determine requires more than fifteen (15) days to cure, Licensee commence action to cure within such fifteen (15) days and prosecute such cure diligently until completion within a reasonable time. Licensee's failure to complete such cure within a reasonable time shall also constitute a default by Licensee.

D. The Parties acknowledge and agree that Licensee's failure to perform or comply with any covenant, condition or agreement in this License may be of such a one-time nature that such a Default is not subject to cure (e.g. Licensee's failure on a given day to abide by the hours of operation permitted by this License) (a "One-Time Default"). In such an event, City shall provide written notice to Licensee within five (5) business days of City's knowledge and determination of the occurrence of a One-Time Default. City's provision to Licensee of three such One-Time Default notices during the term of this License for Licensee's failure to perform or comply with the same (or similar) covenant, condition or agreement contained in this License shall constitute a breach by Licensee of this License.

Section 19. Amendment; Waiver. No term or provision of this License may be amended, altered, modified or waived orally or by course of conduct, but only by an instrument in writing signed by a duly authorized officer or representative of each Party. No waiver by either Party of any provision of this License, or waiver of any breach of this License, shall be deemed to be a waiver of any other provision of this License, or of any subsequent breach by either Party of the same or any other provision of this License.

Section 20. Governing Law; Venue. This License is to be governed by and construed in accordance with the laws of the State of California, without regard to the principles of conflicts of laws. Any action by a party to this Agreement to enforce or interpret the terms hereof shall be maintained in the courts in San Bernardino County.

Section 21. Attorneys' Fees. If either Party to this License brings an action to enforce the terms hereof or declare rights hereunder, the prevailing party in such action, on trial or appeal, shall be entitled to reasonable attorneys' fees to be paid by the non-prevailing party as fixed by the court.

Section. 22. Counterparts. This License Agreement may be executed in counterparts, each of which is an original but all of which together constitute but one and the same instrument.

Section 23. Severability. If any particular provision of this Agreement is held invalid or unenforceable for any reason by a court of competent jurisdiction, this Agreement shall otherwise remain in full force and effect and shall be construed in all respects as if such invalid or unenforceable provision was omitted.

IN WHITNESS WHEREOF, the parties have executed this Agreement to be effective as of the 3rd day of March, 2026.

CITY OF REDLANDS

By:_____
Mario Saucedo, Mayor

4TINOS

By: _____
Fortino Vizcaino, Owner

ATTEST:

_____
Jeanne Donaldson, City Clerk

EXHIBIT "A"
CORPORATE YARD



City Council Meeting **I. 15.**

DATE: 03/03/2026

TO: Honorable Mayor and City Council Members

SUBJECT: Approve the Sole Source Purchase Order with Meridian Rapid Defense Group LLC., for the purchase of mobile crash barriers for an amount not-to-exceed $71,343.34 and determine that approval of the purchase is exempt from environmental review pursuant to Section 15061(b)(3) of the State's guidelines implementing the California Environmental Quality Act (Facilities and Community Services Department Director Crocker)

MOTION(S):

If the City Council determines that staff's recommendation is appropriate, the following motions are provided:

1. I move that approval of a sole source purchase order with Meridian Rapid Defense Group is exempt from environmental review pursuant to Section 15061(b)(3) of the State's guidelines implementing the California Environmental Quality Act; and

2. I move that City Council approve a sole source purchase order with Meridian Rapid Defense Group for an amount not-to-exceed $71,343.34.

RECOMMENDATION:

Staff recommends that the City Council determine approval of the sole source purchase order is exempt from environmental review pursuant to Section 15061(b)(3) of the State's guidelines implementing the California Environmental Quality Act; and approve a sole source purchase order for the purchase of mobile crash barriers in an amount not-to-exceed $71,343.34 with Meridian Rapid Defense Group.

DISCUSSION:

In 2022, the City Council approved the purchase of Meridian crash barriers for use at city events to address growing concerns for the safety of patrons, visitors, merchants and city staff. Over the last few years, the City's community events have expanded and the need to purchase additional barriers is warranted for the safety of the community. The purchase of the additional crash barriers would provide a cost savings on future rental fees.

The Meridian Rapid Defense Group manufactures a unique mobile crash barrier system. Each barrier weighs approximately 700 pounds, yet can be transported, positioned, and removed efficiently due to its design. In the event of a vehicle impact, the barrier is engineered to high-center the vehicle and stop it, preventing it from entering pedestrian areas.

The Facilities and Community Service Department along with Redlands Police Department have evaluated multiple options and found that no other system on the market provides comparable testing, proven performance and value. The Meridian system is significantly more cost-effective than traditional post-style barriers, which require extensive street reconstruction to install in-ground receivers. Comparable fixed systems capable of meeting the required crash rating for downtown streets are estimated to cost approximately $750,000.

Staff recommends approval of a sole source purchase order with Meridian Rapid Defense Group LLC., for additional mobile crash barriers to be used citywide, with primary use in the downtown area. The total purchase amount for the additional barriers is not to exceed $71,343.34.

The project is exempt from the California Environmental Quality Act (CEQA) under Section 15061(b)(3), the “common sense” exemption. Because the action involves purchasing mobile crash barriers and will not result in any physical environmental changes, it can be stated with certainty that the project will not have a significant environmental impact.

ALTERNATIVES:

City Council may decline to approve the sole source purchase with Meridian Rapid Defense Group.

STRATEGIC PLAN:

Supports Priority B - Public Health and Safety

SUBMITTED BY:
Tabitha Crocker, Facilities and Community Services Department Director

RECOMMENDED BY:
Charles M. Duggan Jr., City Manager

REVIEWED BY:
Janice McConnell, Assistant City Manager
Christopher Boatman, Assistant City Manager
Danielle Garcia, Management Services/Finance Director
Dana Abramovitz-Daniel, Procurement Manager

PREPARED BY:
Erik Reeves, Field Services Superintendent

Fiscal Impact

Fiscal Year:	FY 25/26
Revenue Generating:	N
Appropriation Required Y/N:	N
Amount:	71,343.34
Budgeted Y/N:	Y
Account No.:	101304

Discussion:

Funding for this purchase is included in the Parks Division Fund (101303) of the Fiscal Year 2024/26 Budget as adopted by City Council.

Attachments

Barrier Quote
Meridian Barrier SSF

Meridian Rapid Defense Group Sales LLC
177 E. Colorado Blvd
Suite 200
Pasadena CA 91105
United States

Quote

#QUO-S-11855

06/16/2025

GSA Contract #47QSWA19D001F

Bill To
City of Redlands CA
1270 W Park Avenue
Redlands CA 92373
United States

Ship To
City of Redlands CA
1270 W Park Avenue
Redlands CA 92373
United States

Date	Expires	Shipping Method	Sales Rep
06/16/2025	09/14/2025		Perrin S Lee

Item		Price Level	Quantity	Rate	Amount
AB1200	Archer 1200 Barrier	GSA	9	6,513.75	$58,623.75
MCTR002	Annual Certified Training		1	3,995.00	$3,995.00
F	Freight Charges		1	3,595.00	$3,595.00

Subtotal	$66,213.75
Tax (8.75%)	$5,129.59
Total	$71,343.34

Notes:

Payment Terms:
Due to high demand, Meridian is requesting a 50% deposit to ensure timely delivery of your product.

Wire Transfer Instructions:
Meridian Rapid Defense Group Sales LLC
Account Number: 568605235
Bank Name: Chase Bank, N.A.
Wire Routing : 021000021
ACH Routing : 322271627

Check Remittance:
530 New Los Angeles Ave #115-345
Moorpark, CA 93021

Sole Source/ Single Source/ Standardization Form

For procurement of supplies, equipment and services valued at $5,000 and over

NOTE: Every question must be answered with appropriate documentation attached; incomplete forms will be immediately rejected by Purchasing.

Date: 8/28/25

TO: Purchasing Division

FROM: Erik Reeves FCS Dept

Purchase Requisition # _____

Estimated Total Cost: $ $71,343.34

Proposed Vendor: Meridian Rapid Defense Group

Request Term: One Time Purchase

This form must accompany the purchase document whenever an exception to the competitive process is requested. Requests for goods and/or services from a specific vendor or limited to a specific brand, where substitutes to the recommended vendor or brand are unacceptable, must be accompanied by a written justification explaining the circumstances that make alternatives unacceptable.

The City Manager will determine whether the justification is appropriate. Requests for exception must be supported by factual statements that will pass an audit.

INSTRUCTIONS

1. Please check all applicable categories (a. through i.) below and provide additional information where indicated.

☐ a. The requested product is an integral repair part or accessory compatible with existing equipment.

Existing Equipment: N/A

Manufacturer/Model Number: N/A

Age: N/A

Current Estimated Value: N/A

☒ b. The requested product has unique design/performance specifications or quality requirements that are not available in comparable products.

☐ c. I have standardized the requested product and the use of another brand/model would require considerable time and funding to evaluate.

☐ d. The requested product is one in which I (and/or my staff) have specialized training and/or extensive expertise. Retraining would incur substantial cost in time and/or funding.

☐ e. The requested product is used or demonstration equipment available at a lower-than-new cost.

☐ f. Repair/Maintenance service is available only from manufacturer or designated service representative.

☐ g. Upgrade to or enhancement of existing software is available only from manufacturer.

☒ h. Service proposed by vendor is unique; therefore, competitive bids are not available or applicable.

☐ i. Other factors (provide detailed explanation in #2 below).

2. Provide a detailed explanation and pertinent documentation *for each category* checked in item 1 above. Attach additional sheets if necessary:

Meridian Rapid Defense Group has designed a traffic barrier unique to any other available on the market. Traffic barriers have been necessary within our downtown area for many years. FCS and RPD have explored different options and found that, for the price and effectiveness, there is no other barrier on the market that has been tested and proven to be effective in stopping or drastically decelerating a vehicle. FCS made an initial purchase of two trailers of barriers in 2022. The continued use of the barriers has shown the need for additional barriers, to support

3. Was an evaluation of other equipment, products, or services performed?

☒ Yes ☐ No

***If yes, please explain the type of evaluation performed and provide all supporting documentation*:**

Internet search and on-site demonstration. Time is of the essence due to the reinstatement of T

4. List below the name of each individual who was involved in the evaluation, if conducted, and in making the recommendation to procure this product or service. Attach additional information, if necessary.

Mike Foster Dave Jaffe Erik Reeves

5. Explain what action(s) the department would take if the sole/single source services were no longer available

The department would not be able to meet the expectation for the level of safety required to support outdoor events.

6. I certify that the above information is accurate to the best of my knowledge, and a signed copy of this document will be kept on file and available for audit in my department

E. Reeves Digitally signed by Erik Reeves Date: 2025.09.02 09:52:50 -07'00' 8/28/25

Prepared by Date

Tabitha Crocker Digitally signed by Tabitha Crocker Date: 2025.09.02 11:09:08 -07'00'

Department Director Date

Purchasing Approvals

_____

Purchasing Agent Approval Date

_____

City Manager Approval Date

City Council Meeting **I. 16.**

DATE: 03/03/2026

TO: Honorable Mayor and City Council Members

SUBJECT: Approve the First Amendment to the Agreement with Willdan Engineering, increasing the total amount from $75,000 to $180,000 for the Professional Services Agreement to provide code enforcement services (Facilities and Community Services Director Crocker)

MOTION(S):

If the City Council determines that staff's recommendation is appropriate, the following motion is provided:

"I move to approve the First Amendment to the Agreement with Willdan Engineering to increase the total amount from $75,000 to $180,000."

RECOMMENDATION:

Staff recommends that the City Council approve the First Amendment to the Agreement with Willdan Engineering to increase the total amount from $75,000 to $180,000 for the Professional Services Agreement providing code enforcement services.

DISCUSSION:

In September 2025, staff issued a Request for Proposals to secure supplemental code enforcement services to help augment City staff levels and provide additional operational flexibility. The City subsequently entered into an agreement with Willdan Engineering to provide code enforcement support services.

Initially, the contracted services were utilized to provide weekend code enforcement coverage and address workload demands. As operational needs evolved including implementation of new state-mandated organic waste regulations the contracted staff were also used to support Solid Waste

compliance education and outreach efforts, which increased the rate at which the initial contract amount was expended.

In addition, the Code Enforcement Division has recently experienced vacancies within the division. Those vacancies have significantly reduced in-house staffing capacity and increased reliance on supplemental services to maintain service levels, respond to complaints and continue enforcement efforts citywide.

The attached amendment increases the total contract authority from $75,000 to $180,000, which is budgeted. This additional funding is projected to allow the City to maintain necessary supplemental code enforcement services through the end of the fiscal year while recruitment efforts are underway to fill vacant Code Officer positions.

ALTERNATIVES:

The City Council may choose not to approve the First Amendment and provide staff with alternative direction.

STRATEGIC PLAN:

Not applicable

SUBMITTED BY:
Tabitha Crocker, Facilities & Community Services Director

RECOMMENDED BY:
Charles M. Duggan Jr., City Manager

REVIEWED BY:
Yvette M. Abich Garcia, City Attorney
Janice McConnell, Assistant City Manager
Christopher Boatman, Assistant City Manager
Danielle Garcia, Management Services/Finance Director

PREPARED BY:
Joe Bierma, Management Analyst

Fiscal Impact

Fiscal Year: 2025/26

Appropriation Required Y/N: No

Discussion:

Funding for this service will be drawn from both the Code Enforcement and Solid Waste budgets.

Attachments

1st Amendment Agreement with Willdan Engineering

Original Agreement

FIRST AMENDMENT TO AGREEMENT TO PERFORM PROFESSIONAL SERVICES

This first amendment ("First Amendment") to the agreement for Code Enforcement services ("Agreement"), dated 3rd of September, 2025, by and between the City of Redlands, a municipal corporation and a general law city ("City"), and Willdan Engineering ("Consultant"), a California corporation, is made and entered into this 3rd day of March, 2026.

RECITALS

WHEREAS, it is the desire of the City and Consultant to amend their existing Agreement.

NOW, THEREFORE, for good and valuable consideration in the receipt of which is hereby acknowledged City and Consultant agree as follows:

AGREEMENT

Section 1. Section 5.1 of Article 5 of the Agreement, entitled "Compensation," is hereby amended to read as follows:

"Compensation: Total compensation for Consultant's performance of the Services shall not exceed the amount of One Hundred and Eighty Thousand Dollars ($180,000). City shall pay Consultant on a time and materials basis up to the not to exceed amount in accordance with Exhibit "B," titled "Fee Schedule" which is attached hereto and incorporated herein by reference."

Section 2. The "Scope of Services" set forth in Exhibit "A" of the Agreement is hereby replaced in its entirety with Exhibit "A," which is attached hereto and incorporated herein by this reference.

Section 3. All other provisions of the Agreement shall remain unchanged by this First Amendment and in effect.

IN WITNESS WHEREOF, the parties have executed this First Amendment, to be effective as of March 3, 2026.

CITY OF REDLANDS

_____
Mario Saucedo, Mayor

Willdan Engineering

By: _____
Vanessa Munoz, President/CEO

ATTEST:

_____
Jeanne Donaldson, City Clerk

EXHIBIT “A”

SCOPE OF SERVICES

Services will include, but are not limited to:

A minimum of one (1) full-time and up to four (4) additional full-time or part-time Code Enforcement Officers to perform as-needed services for the City. Depending on the needs of the City, the number of staff may be increased to two full-time and one part-time officer. The assigned officer(s) shall be dedicated to working in partnership with residents, tenants, landlords, and business owners to promote and maintain a safe and desirable living and working environment. The assigned officer(s) shall work toward a goal of resolving problems efficiently and safely. Additionally, they shall have experience in investigative practices that aid in substantiating the validity of a complaint on a property and in turn addressing verified violations through proper due process noticing.

The assigned officer(s) shall

- Comply with the City's procedures for reporting inspection results and deficiencies.
- Use City inspection correction forms.
- Complete necessary digital entries that capture site inspection results, case status communications and any documentation of notices provided to responsible parties and stakeholders.
- Conduct code enforcement related inspections as needed.
- Maintain records as needed for the efficient and effective operation of the City.
- Meet with members of the general public and municipal staff on a daily basis as needed.

The most common areas of concern may include but are not limited to:

- **General Property Maintenance and Blight**
  Address conditions such as overgrown vegetation, accumulation of waste or debris, graffiti, and other visual nuisances that affect neighborhood livability. Engage with property owners and tenants to promote voluntary compliance.

- **Unpermitted Activities and Vending**
  Monitor and respond to unpermitted commercial activities, including vending on public property or within restricted areas. Activities may include education, issuing citations, and coordinating with other departments for compliance.

- **Signage Compliance**
  Review and enforce signage regulations to ensure all temporary and permanent signs meet local codes, contributing to a visually consistent and legally compliant public environment.

- **Rental Housing Standards**
  Assist in inspecting rental properties to ensure they meet applicable health, safety, and maintenance standards. Provide education and outreach to landlords, tenants, and property managers regarding compliance expectations.

  Additional code enforcement areas may be addressed as directed by the City, in alignment with applicable municipal codes, policies, and community priorities.

Qualifications

Code Enforcement personnel shall be certified through the International Code Council, CACEO, and/or other various training programs offered through accredited institutions. In addition, personnel shall hold a PC832 certification.

Scheduled Hours of Work

Code enforcement services will be provided on an as-needed basis, with scheduling determined by the operational needs of the City. Typical hours may include weekdays, evenings, and weekends to address a variety of enforcement priorities, including vendor-related activity.
Specific work schedules will be coordinated in advance, with reasonable notice provided for any changes.

EXHIBIT "B"

FEE SCHEDULE

Consultant shall provide contract code enforcement services to the City of Redlands for a flat hourly rate based on the rate schedule below. All contract code enforcement services shall be billed at the Code Enforcement Officer rate for all services outlined in the Scope of Work.

In the case additional services are requested during the term of this agreement, the following hourly rates will be applied.

Service Provided	Hourly Rate	Hourly Rate with Vehicle
Code Enforcement Technician	$75	$85
Code Enforcement Officer	$85	$95
Senior Code Enforcement Officer	$90	$100
Code Enforcement Supervisor	$110	$120
Code Consulting/Training Officer	$130	$140
Code Enforcement Manager	$150	$160
Overtime	Billed at 1.5 times the hourly rate	

AGREEMENT TO PERFORM PROFESSIONAL SERVICES

This agreement for the provision of Code Enforcement Services ("Agreement") is made and entered in this 3rd day of September, 2025 ("Effective Date"), by and between the City of Redlands, a municipal corporation ("City") and Willdan Engineering, a California corporation ("Consultant"). City and Consultant are sometimes individually referred to herein as a "Party" and, together, as the "Parties." In consideration of the mutual promises contained herein, City and Consultant agree as follows:

ARTICLE 1 – ENGAGEMENT OF CONSULTANT

1.1 City hereby engages Consultant to provide Code Enforcement services for City (the "Services").

1.2 The Services shall be performed by Consultant in a professional manner, and Consultant represents that it has the skill and the professional expertise necessary to provide the Services to City at a level of competency presently maintained by other practicing professional consultants in the industry providing like and similar types of Services.

ARTICLE 2 – SERVICES OF CONSULTANT

2.1 The Services that Consultant shall perform are more particularly described in Exhibit "A," titled "Scope of Services," which is attached hereto and incorporated herein by this reference.

2.2 Consultant shall comply with applicable federal, state and local laws and regulations in the performance of this Agreement including, but not limited to, any applicable State prevailing wage laws.

ARTICLE 3 – RESPONSIBILITIES OF CITY

3.1 City designates Tabitha Crocker, Facilities & Community Services Department Director, as City's representative with respect to performance of the Services, and such person shall have the authority to transmit instructions, receive information, interpret and define City's policies and decisions with respect to performance of the Services.

ARTICLE 4 – PERFORMANCE OF SERVICES

4.1 Consultant shall perform and complete the Services in a prompt and diligent manner.

4.2 The term of this Agreement shall be effective from the Effective Date of this Agreement through June 30, 2026, unless terminated earlier as provided herein.

4.3 If Consultant's Services include deliverable electronic visual presentation materials, such materials shall be delivered in a form, and made available to City, consistent with City

Council-adopted policy for the same. It shall be the obligation of Consultant to obtain a copy of such policy from City staff.

ARTICLE 5 – PAYMENTS TO CONSULTANT

5.1 Compensation: Total compensation for Consultant's performance of the Services shall not exceed the amount of Seventy-Five Thousand Dollars ($75,000). City shall pay Consultant on a time and materials basis up to the not to exceed amount in accordance with Exhibit "B," titled "Fee Schedule" which is attached hereto and incorporated herein by reference.

5.2 Consultant shall submit monthly invoices to City describing the Services performed during the preceding month. Consultant's invoices shall include a brief description of the Services performed, the dates the Services were performed, the number of hours spent and by whom, and a description of reimbursable expenses related to the Services. City shall pay Consultant no later than thirty (30) days after receipt and approval by City of Consultant's invoice.

5.3 Any notice or other communication required, or which may be given, pursuant to this Agreement, shall be in writing. Any such notice shall be deemed delivered (i) on the date of delivery in person; (ii) five (5) days after deposit in first class registered mail, with return receipt requested; (iii) on the actual delivery date if deposited with an overnight courier; or (iv) on the date sent by facsimile or electronic mail transmission (including PDF), if confirmed with a copy sent contemporaneously by first class, certified, registered or express mail; in each case properly posted and fully prepaid to the appropriate address set forth below, or such other address as a Party may provide notice in accordance with this section:

CITY:

City Clerk
City of Redlands
35 Cajon Street
P.O. Box 3005 (mailing)
Redlands, CA 92373
jdonaldson@cityofredlands.org
Phone: (909) 798-7531

CONSULTANT:

Vanessa Munoz, President/CEO
Willdan Engineering
650 E. Hospitality Lane, Suite 400
San Bernardino, CA 92408
vmunez@willdan.com
Phone: 714-940-6300
Fax: 714-940-4920

ARTICLE 6 – INSURANCE AND INDEMNIFICATION

6.1 The following insurance coverage required by this Agreement shall be maintained by Consultant for the duration of its performance of the Services. Consultant shall not perform any Services unless and until the required insurance listed below is obtained by Consultant. Consultant shall provide City with certificates of insurance and endorsements evidencing such insurance prior to commencement of the Services. Insurance policies shall include a provision prohibiting cancellation or modification of the policy except upon thirty (30) days prior written notice to City.

A. Workers' Compensation and Employer's Liability insurance in the amount that meets statutory requirements with an insurance carrier acceptable to City, or certification to City that Consultant is self-insured or exempt from the workers' compensation laws of the State of California. Consultant shall execute and provide City with Exhibit "C," titled "Workers' Compensation Insurance Certification," which is attached hereto and incorporated herein by this reference, prior to performance of the Services.

B. Comprehensive General Liability insurance with carriers acceptable to City in the minimum amount of One Million Dollars ($1,000,000) per occurrence and Two Million Dollars ($2,000,000) aggregate, for public liability, property damage and personal injury is required. City shall be named as an additional insured and such insurance shall be primary and non-contributing to any insurance or self-insurance maintained by City.

C. Consultant shall secure and maintain professional liability insurance throughout the term of this Agreement in the amount of One Million Dollars ($1,000,000) per claim made.

D. Business Auto Liability coverage, with minimum limits of One Million Dollars ($1,000,000) per occurrence, combined single limit bodily injury liability and property damage liability. This coverage shall include all Consultant owned vehicles used in connection with Consultant's provision of the Services, hired and non-owned vehicles, and employee non-ownership vehicles. City shall be named as an additional insured and such insurance shall be primary and non-contributing to any insurance or self-insurance maintained by City.

E. Consultant is expressly prohibited from assigning or subcontracting any of the Services without the prior written consent of City. In the event of mutual agreement by the Parties to assign or subcontract a portion of the Services, Consultant shall add such assignee or subcontractor as an additional insured to the insurance policies required hereby and provide City with the insurance endorsements prior to any Services being performed by the assignee or subcontractor.

6.2 Consultant shall defend, indemnify and hold harmless City and its elected and appointed officials, employees and agents from and against any and all claims, losses or liability, including attorneys' fees, arising from injury or death to persons or damage to property occasioned by any negligent act or omission by, or the willful misconduct of, Consultant, or its officers, employees and agents in performing the Services.

ARTICLE 7 – CONFLICTS OF INTEREST

7.1 Consultant covenants and represents that it does not have any investment or interest in any real property that may be the subject of this Agreement or any other source of income, interest in real property or investment that would be affected in any manner or degree by the performance of Consultant's Services. Consultant further covenants and represents that in the performance of its duties hereunder, no person having any such interest shall perform any Services under this Agreement.

7.2 Consultant agrees it is not a designated employee within the meaning of the Political Reform Act because Consultant:

A. Does not make a governmental decision whether to:

(i) approve a rate, rule or regulation, or adopt or enforce a City law;
(ii) issue, deny, suspend or revoke any City permit, license, application, certification, approval, order or similar authorization or entitlement;
(iii) authorize City to enter into, modify or renew a contract;
(iv) grant City approval to a contract that requires City approval and to which City is a party, or to the specifications for such a contract;
(v) grant City approval to a plan, design, report, study or similar item;
(vi) adopt, or grant City approval of, policies, standards or guidelines for City or for any subdivision thereof.

B. Does not serve in a staff capacity with City and in that capacity, participate in making a governmental decision or otherwise perform the same or substantially the same duties for City that would otherwise be performed by an individual holding a position specified in City's Conflict of Interest Code under Government Code section 87302.

7.3 In the event City determines that Consultant must disclose its financial interests, Consultant shall complete and file a Fair Political Practices Commission Form 700, Statement of Economic Interests, with the City Clerk's office pursuant to the written instructions provided by the City Clerk.

ARTICLE 8 – GENERAL CONSIDERATIONS

8.1 In the event any action is commenced to enforce or interpret any of the terms or conditions of this Agreement the prevailing Party shall, in addition to any costs and other relief, be entitled to the recovery of its reasonable attorneys' fees, including fees for the use of in-house counsel by a Party.

8.2 Consultant shall not assign any of the Services, except with the prior written approval of City and in strict compliance with the terms and conditions of this Agreement. Any assignment or attempted assignment without such prior written consent may, in the sole discretion of City, result in City's immediate termination of this Agreement.

8.3 Consultant is for all purposes under this Agreement an independent contractor and shall perform the Services as an independent contractor. Neither City nor any its agents shall have control over the conduct of Consultant or Consultant's employees, except as herein set forth. Consultant shall supply all necessary tools and instrumentalities required to perform the Services. Assigned personnel employed by Consultant are for its account only, and in no event shall Consultant or personnel retained by it be deemed to have been employed by City or engaged by City for the account of, or on behalf of City. Consultant

shall have no authority, express or implied, to act on behalf of City in any capacity whatsoever as an agent, nor shall Consultant have any authority, express or implied, to bind City to any obligation.

8.4 This Agreement may be terminated by City, in its sole discretion, by providing not less than five (5) days prior written notice to Consultant of City's intent to terminate. If this Agreement is terminated by City, an adjustment to Consultant's compensation shall be made, but (1) no amount shall be allowed for anticipated profit or unperformed Services, and (2) any payment due Consultant at the time of termination may be adjusted to the extent of any additional costs to City occasioned by any default by Consultant. Upon receipt of a termination notice, Consultant shall immediately discontinue its provision of the Services and, within five (5) days of the date of the termination notice, deliver or otherwise make available to City, copies (in both hard copy and electronic form, where applicable) of project related data, design calculations, drawings, specifications, reports, estimates, summaries and such other information and materials as may have been accumulated by Consultant in performing the Services. Consultant shall be compensated on a pro-rata basis for Services completed up to the date of termination.

8.5 Consultant shall maintain books, ledgers, invoices, accounts and other records and documents evidencing costs and expenses related to the Services for a period of three (3) years, or for any longer period required by law, from the date of final payment to Consultant pursuant to this Agreement. Such books shall be available at reasonable times for examination by City at the office of Consultant.

8.6 This Agreement, including the Exhibits incorporated herein by reference, represents the entire agreement and understanding between the Parties as to the matters contained herein, and any prior negotiations, written proposals or verbal agreements relating to such matters are superseded by this Agreement. Except as otherwise provided for herein, any amendment to this Agreement shall be in writing, approved by City and signed by City and Consultant.

8.7 This Agreement shall be governed by and construed in accordance with the laws of the State of California, without regard to its conflicts of laws provisions. The Parties agree that all actions or proceedings arising in connection with this Agreement shall be tried and litigated only in the state courts located in San Bernardino County, California, and the federal courts located in Riverside County, California.

8.8 If one or more of the sentences, clauses, paragraphs or sections contained in this Agreement is declared invalid, void or unenforceable by a court of competent jurisdiction, the same shall be deemed severable from the remainder of this Agreement and shall not affect, impair or invalidate the remaining sentences, clauses, paragraphs or sections contained herein, unless to do so would deprive a Party of a material benefit of its bargain under this Agreement.

IN WITNESS WHEREOF, duly authorized representatives of City and Consultant have signed in confirmation of this Agreement.

CITY OF REDLANDS

By: _____
Charlie M. Duggan, Jr., City Manager

WILLDAN ENGINEERING

By: _____
Vanessa Munoz, President/CEO

ATTEST:

_____
Jeanne Donaldson, City Clerk

EXHIBIT "A"

SCOPE OF SERVICES

Services will include, but are not limited to:

A minimum of one (1) full-time Code Enforcement Officer to perform as-needed services for the City. Depending on the needs of the City, the number of staff may be increased to two full-time and one part-time officer. The assigned officer(s) shall be dedicated to working in partnership with residents, tenants, landlords, and business owners to promote and maintain a safe and desirable living and working environment. The assigned officer(s) shall work toward a goal of resolving problems efficiently and safely. Additionally, they shall have experience in investigative practices that aid in substantiating the validity of a complaint on a property and in turn addressing verified violations through proper due process noticing.

The assigned officer(s) shall

- Comply with the City's procedures for reporting inspection results and deficiencies.
- Use City inspection correction forms.
- Complete necessary digital entries that capture site inspection results, case status communications and any documentation of notices provided to responsible parties and stakeholders.
- Conduct code enforcement related inspections as needed.
- Maintain records as needed for the efficient and effective operation of the City.
- Meet with members of the general public and municipal staff on a daily basis as needed.

The most common areas of concern may include but are not limited to:

- **General Property Maintenance and Blight**
  Address conditions such as overgrown vegetation, accumulation of waste or debris, graffiti, and other visual nuisances that affect neighborhood livability. Engage with property owners and tenants to promote voluntary compliance.

- **Unpermitted Activities and Vending**
  Monitor and respond to unpermitted commercial activities, including vending on public property or within restricted areas. Activities may include education, issuing citations, and coordinating with other departments for compliance.

- **Signage Compliance**
  Review and enforce signage regulations to ensure all temporary and permanent signs meet local codes, contributing to a visually consistent and legally compliant public environment.

- **Rental Housing Standards**
  Assist in inspecting rental properties to ensure they meet applicable health, safety, and maintenance standards. Provide education and outreach to landlords, tenants, and property managers regarding compliance expectations.

Additional code enforcement areas may be addressed as directed by the City, in alignment with applicable municipal codes, policies, and community priorities.

Qualifications

Code Enforcement personnel shall be certified through the International Code Council, CACEO, and/or other various training programs offered through accredited institutions. In addition, personnel shall hold a PC832 certification.

Scheduled Hours of work

Code enforcement services will be provided on an as-needed basis, with scheduling determined by the operational needs of the City. Typical hours may include weekdays, evenings, and weekends to address a variety of enforcement priorities, including vendor-related activity. Specific work schedules will be coordinated in advance, with reasonable notice provided for any changes.

EXHIBIT "B"

FEE SCHEDULE

Consultant shall provide contract code enforcement services to the City of Redlands for a flat hourly rate based on the rate schedule below. All contract code enforcement services shall be billed at the Code Enforcement Officer rate for all services outlined in the Scope of Work.

In the case additional services are requested during the term of this agreement, the following hourly rates will be applied.

Service Provided	Hourly Rate	Hourly Rate with Vehicle
Code Enforcement Technician	$75	$85
Code Enforcement Officer	$85	$95
Senior Code Enforcement Officer	$90	$100
Code Enforcement Supervisor	$110	$120
Code Consulting/Training Officer	$130	$140
Code Enforcement Manager	$150	$160
Overtime	Billed at 1.5 times the hourly rate	

EXHIBIT "C"

WORKERS' COMPENSATION INSURANCE CERTIFICATION

Every employer, except the State, shall secure the payment of compensation in one or more of the following ways:

(a) By being insured against liability to pay compensation by one or more insurers duly authorized to write compensation insurance in this State.

(b) By securing from the Director of Industrial Relations, a certificate of consent to self-insure, either as an individual employer, or as one employer in a group of employers, which may be given upon furnishing proof satisfactory to the Director of Industrial Relations of ability to self-insure and to pay any compensation that may become due to his or her employees.

CHECK ONE

X I am aware of the provisions of Section 3700 of the Labor Code which requires every employer to be insured against liability for Workers' Compensation or to undertake self-insurance in accordance with the provisions of that Code, and I will comply with such provisions before commencing the performance of the work and activities required or permitted under this Agreement. (Labor Code §1861).

____ I affirm that at all times, in performing the work and activities required or permitted under this Agreement, I shall not employ any person in any manner such that I become subject to the workers' compensation laws of California. However, at any time, if I employ any person such that I become subject to the workers' compensation laws of California, immediately I shall provide the City with a certificate of consent to self-insure, or a certification of workers' compensation insurance.

I certify under penalty of perjury under the laws of the State of California that the information and representations made in this certificate are true and correct.

WILLDAN ENGINEERING

By: _____
Vanessa Muñoz, President/CEO

Date: 9/10/2025

City Council Meeting **J. 1.**

DATE: 03/03/2026

TO: Honorable Mayor and City Council Members

SUBJECT: Consideration of Resolution No. 8760 Approving the Measure I Continuation Expenditure Plan Developed by the San Bernardino County Transportation Authority (City Manager Duggan)

MOTION(S):

If the City Council determines that staff's recommendation is appropriate, the following motion is provided:

I move to adopt Resolution No. 8760 approving the Measure I Continuation Expenditure Plan developed by the San Bernardino County Transportation Authority.

RECOMMENDATION:

Staff recommends that the City Council adopt Resolution No. 8760 approving the Measure I Continuation Expenditure Plan prepared by the San Bernardino County Transportation Authority (SBCTA).

DISCUSSION:

Measure I is a one-half of one percent transactions and use tax originally approved by San Bernardino County voters in 1989 and renewed in 2004. The measure provides dedicated funding for transportation improvements throughout the County and is currently set to expire on April 1, 2040. The San Bernardino County Transportation Authority (SBCTA) is proposing a continuation of Measure I beyond 2040, which is anticipated to be placed before voters on the November 3, 2026 ballot. If approved by voters, the continuation would maintain the existing one-half of one percent sales tax rate without increasing taxes and is estimated to generate approximately $7.5 billion over its first 30 years. Revenues would remain within San Bernardino County and would continue to be dedicated exclusively to transportation-related purposes.

The proposed Expenditure Plan allocates revenues by percentage and geographic subarea. The City of Redlands is located within the San Bernardino Valley Subarea, where funds would be allocated as follows: twenty-five percent (25%) for Local Mobility, fifty percent (50%) for Regional Mobility, and twenty-five percent (25%) for Operations. Local Mobility funds are distributed directly to jurisdictions based on population and may be used for street rehabilitation, pothole repair, sidewalks, bicycle facilities, grade separations, and related improvements. Jurisdictions must adopt an annually updated Five-Year Plan to receive funds, and five percent (5%) must initially be reserved for active transportation projects.

Regional Mobility funds support major regional projects such as freeway and interchange improvements, rail capital and rehabilitation, congestion management, and related system enhancements, with expenditures determined by the SBCTA Board based on recommendations from local representatives. Operations funds support transit and mobility services, including bus and rail operations, senior and specialized transportation services, rideshare programs, and first/last mile connections. Additionally, three percent (3%) of total countywide revenue is reserved for Interregional Mobility projects addressing key corridors, goods movement, and emergency and disaster response infrastructure.

The Expenditure Plan includes return-to-source provisions, annual local audits, biennial SBCTA audits, and continued oversight by an Independent Taxpayer Oversight Committee. Pursuant to Public Utilities Code Section 180206, the Expenditure Plan must be approved by the County Board of Supervisors and a majority of the cities representing a majority of the incorporated population in order to place the measure before voters. Participating jurisdictions are being asked to consider the Resolution in advance of the deadlines necessary to place the measure on the November 2026 ballot.

ALTERNATIVES:

City Council may deny the staff recommendation and provide alternative direction.

STRATEGIC PLAN:

Priority D: Sustainability

SUBMITTED BY:
Charles M. Duggan Jr., City Manager

REVIEWED BY:
Yvette M. Abich Garcia, City Attorney
Janice McConnell, Assistant City Manager
Danielle Garcia, Management Services/Finance Director

PREPARED BY:
Whitney Mesna, Management Analyst

Fiscal Impact

Fiscal Year: 25-26

Discussion:

There is no direct fiscal impact associated with the adoption of this Resolution.

Attachments

Resolution No. 8760
Exhibits

RESOLUTION NO. 8760

A RESOLUTION OF THE CITY COUNCIL OF THE CITY OF REDLANDS APPROVING THE EXPENDITURE PLAN FOR THE EXPENDITURE OF REVENUES IN SAN BERNARDINO COUNTY EXPECTED TO BE DERIVED FROM THE PROPOSED CONTINUATION OF MEASURE I

WHEREAS, the voters of San Bernardino County passed Measure I in November 1989 and renewed it in 2004, authorizing San Bernardino Associated Governments, acting as the San Bernardino County Transportation Authority, to impose a one-half of one percent transactions and use tax for transportation improvements, applicable in the incorporated and unincorporated territory of the County of San Bernardino, through April 1, 2040, and

WHEREAS, Measure I has provided funding for numerous transportation projects, including freeways, local roads, major streets, interchanges, the Metrolink commuter train system, public buses, traffic signals, and more; and

WHEREAS, the imposition of the one-half of one percent transactions and use tax is set to expire in 2040, and

WHEREAS, San Bernardino County Transportation Authority, after engagement with private sector stakeholders and city and County representatives, has prepared an Expenditure Plan for the revenues expected to be derived from the proposed continuation of Measure I, which is anticipated to be placed on the November 3, 2026, ballot, and

WHEREAS, the proposed Expenditure Plan for the continuation of Measure I is attached hereto as Exhibit 1, and

WHEREAS, if approved by the voters, the continuation of Measure I would authorize the collection of a one-half of one percent sales tax and generate an estimated $7.5 billion in its first 30 years for local transportation projects, and

WHEREAS, if approved by the voters, the continuation of Measure I would not institute a new tax, but continue the existing one-half of one percent sales tax for transportation after April 1, 2040, and

WHEREAS, revenues raised from the continuation of Measure I would remain in San Bernardino County and could not be allocated by the state or federal government, and

WHEREAS, Measure I would provide a long-term funding source to help fight traffic congestion; improve local streets, major roads and highways; and enhance San Bernardino County's economy by providing construction-related jobs, manufacturing jobs, and an effective transportation system to meet the needs of residents and the business community, and

WHEREAS, Public Utilities Code section 180206 requires that the Measure I Continuation Expenditure Plan be approved by the County Board of Supervisors and a majority of the cities representing a majority of the population residing in incorporated areas,

NOW, THEREFORE, BE IT RESOLVED BY THE CITY COUNCIL OF THE CITY OF REDLANDS AS FOLLOWS:

Section 1. The City Council of the City of Redlands hereby approves the Measure I Continuation Expenditure Plan developed by the San Bernardino County Transportation Authority, attached hereto as Exhibit 1 and incorporated herein by reference.

ADOPTED, SIGNED AND APPROVED this 3rd day of March, 2026.

_____
Mario Saucedo, Mayor

ATTEST:

_____
Jeanne Donaldson, City Clerk

I, Jeanne Donaldson, City Clerk of the City of Redlands, hereby certify that the foregoing resolution was duly adopted by the City Council at a regular meeting thereof held on the 3rd day of March, 2026, by the following vote:

AYES:
NOES:
ABSENT:
ABSTAIN:

_____
Jeanne Donaldson, City Clerk

Exhibit A

Transportation Expenditure Plan

Revenue Estimates and Distribution. Allocation of revenue authorized by Ordinance No. 26-1 is established within this Expenditure Plan. Funds shall be allocated by percentage of the actual revenue received. An estimate of revenues and allocation among categories for the first 30 years is $7.5 billion. The estimated revenue is based upon 2026 value of money and is not binding or controlling.

Return to Source. After deduction of required CDTFA fees, funds dedicated for the Interregional Mobility Expenditure Plan and authorized administrative costs, revenues generated from each specified Subarea within San Bernardino County will be expended on projects of direct benefit to that Subarea. Revenues will be accounted for separately for each Subarea and then allocated to specified project categories. Decisions on how revenues for certain project categories are expended within the Subareas will be made by the Authority Board of Directors, based upon recommendation of local representatives.

Subarea Identification. The San Bernardino Valley Subarea will include the cities of Chino, Chino Hills, Colton, Fontana, Grand Terrace, Highland, Loma Linda, Montclair, Ontario, Rancho Cucamonga, Redlands, Rialto, San Bernardino, Upland and Yucaipa and unincorporated areas in the east and west portions of the San Bernardino valley urbanized area. The Mountain/Desert area will include the following subareas: (1) The North Desert Subarea, which includes the City of Barstow and surrounding unincorporated areas; (2) The Colorado River Subarea, which includes the City of Needles and the surrounding unincorporated areas of the East Desert; (3) The Morongo Basin Subarea, which includes the City of Twentynine Palms, Town of Yucca Valley, and surrounding unincorporated areas; (4) The Mountain Subarea, which includes the City of Big Bear Lake and surrounding unincorporated areas of the San Bernardino Mountains; and (5) the Victor Valley Subarea, which includes the Cities of Adelanto, Hesperia, and Victorville; the Town of Apple Valley; and surrounding unincorporated areas including Wrightwood.

Contribution from New Development. No revenue generated from the tax shall be used to replace the fair share contributions required from new development as further described in Section 8 of the Ordinance.

Requirement for Annual Financial and Compliance Audits of Measure Funds. The San Bernardino County Transportation Authority shall undergo a biennial financial audit, and each local jurisdiction receiving an allocation of Measure revenue authorized in this Expenditure Plan shall undergo an annual financial audit, with all audits to be performed in accordance with generally accepted auditing standards and government auditing standards issued by the Comptroller General of the United States. Compliance audits also shall be conducted to ensure that each agency is expending funds in accordance with the provisions and guidelines established for Measure revenue including compliance with Maintenance of Effort provisions

The Interregional Mobility Expenditure Plan. Upon initial collection of revenue, 3% of the revenue generated across all San Bernardino County subareas will be reserved in advance of other allocations specified in this plan, in an account for the Interregional Mobility Expenditure Plan. The Interregional Mobility Expenditure Plan will provide resources for the planning and implementation of projects and programs that provide critical infrastructure to communities impacted by regional motorist, tourism, interregional travel, and goods movement. This program will help plan and deliver critical infrastructure improvements, such as enhancements in the Cajon Pass and other key corridors, that address congestion,

enhance mobility, improve safety, and strengthen resilience. It will also support evacuation planning, bolster emergency response capabilities, improve primary evacuation routes, and fund transit-related evacuation needs. In addition, the program will be available to address unexpected infrastructure damage resulting from natural or human-caused disasters, ensuring rapid recovery and the restoration of essential interregional mobility.

San Bernardino Valley Subarea Expenditure Plan. In that area described as the San Bernardino Valley Subarea, and referred to herein as the Valley Subarea, project categories shall be established as specified below. The San Bernardino Valley Subarea Expenditure Plan is illustrated in Figure A.

A. State and Federal Transportation Funds. A proportional share of projected state and federal transportation funds shall be reserved for use solely within the Valley Subarea.

B. Local Mobility 25%. Local priorities that focus on local roadway, bikeway, and sidewalk construction, repair, and maintenance for improved localized movement. Includes pass through for local priorities such as: local street widening & rehabilitation, potholes, grade separations, sidewalks, bike lanes, streetlights, and quiet zones. Allocations to local jurisdictions shall be on a per capita basis using the most recent State Department of Finance population estimates for January 1, with the County's portion based upon unincorporated population in the Valley Subarea. Estimates of unincorporated population within the Valley Subarea shall be determined by the County Planning Department, reconciled with the State Department of Finance population estimate for January 1 of each year.

Upon initial collection of revenue, each local jurisdiction shall reserve 5% of allocated revenue in a special account to be expended on active transportation projects. Eligible active transportation projects may include, at the discretion of the local jurisdiction, bicycle and pedestrian projects and costs for associated studies or plans. If, after at least ten years of revenue collection, the local jurisdiction's governing body makes a finding that the reserve for active transportation projects is no longer necessary, and the Authority Board of Directors subsequently approves the finding, then all Local Mobility funds allocated to the local jurisdiction may be used for any eligible purpose.

Local Mobility projects are defined as local street and road construction, repair, and maintenance and other eligible local transportation priorities. Except as set forth herein, Local Mobility funds can be used flexibly for any eligible transportation purpose determined to be a local priority, including local streets, major highways, state highway improvements, transit, and other improvements/programs to maximize use of transportation facilities. Expenditure of Local Mobility funds shall be based upon a Five-Year Plan adopted annually by the governing body of each local jurisdiction after being made available for public review and comment. Local Mobility funds shall be disbursed to local jurisdictions upon receipt of the annually adopted Five-Year Plan. The locally adopted Five-Year Plan shall be consistent with local, regional, and state transportation plans.

C. Regional Mobility 50%. Regional priorities that focus on goods movement, transit, managed lanes, congestion management, and emerging transportation technologies to enhance regional movement and include: highway improvements, bus and passenger rail (capital and rehabilitation), corridors, interchanges, environmental mitigation, traffic management systems (freeway service patrol and air quality strategies), quiet zones, planning and project development, and emerging transportation technology.

Regional Mobility projects are defined as congestion relief and safety improvements to corridors that connect communities, serve major destinations, and provide freeway access. Decisions on how Regional Mobility funds are expended will be made by the Authority Board of Directors, based upon recommendation of local jurisdiction representatives. Funding priorities shall be given to improving roadway safety, relieving congestion, and street improvements at rail crossings and shall take into

DRAFT

account equitable geographic distribution over the life of the program. Eligible projects also include, but are not limited to, signal synchronization, systems to improve traffic flow, commuter assistance programs, freeway service patrol, and projects that contribute to environmental enhancement associated with transportation facilities.

D. Operations 25%. Resourcing the operational costs for providing mobility services via rail, transit, senior and specialized services, first/last mile connections, ridesharing, and safety support functions. Decisions on how Operations funds are expended will be made by the Authority Board of Directors, based upon recommendations of local jurisdiction representatives. Funding priorities shall be given to maintaining core services across all modes of mobility.

Mountain/Desert Expenditure Plan. In that area described as the Mountain/Desert area, the following Expenditure Plan requirements shall apply. The Mountain/Desert Subarea Expenditure Plan is illustrated in Figure B.

A. State and Federal Transportation Funds. A proportional share of projected state and federal transportation funds shall be reserved for use solely within the Mountain/Desert Subareas.

B. Local Mobility 70%. Local priorities that focus on local roadway, bikeway, and sidewalk construction, repair, and maintenance for improved localized movement. Includes pass through for local priorities such as: local street widening & rehabilitation, potholes, grade separations, sidewalks, bike lanes, and streetlights. Allocations to local jurisdictions shall be based upon population (50 percent) and tax generation (50 percent). Population calculations shall be based upon the most current State Department of Finance estimates for January 1 of each year. Estimates of unincorporated population within each Subarea shall be determined by the County Planning Department, reconciled with the State Department of Finance population estimate. Tax generation calculations shall be based upon CDTFA data.

Upon initial collection of revenue, each local jurisdiction shall reserve 5% of allocated revenue in a special account to be expended on active transportation projects. Eligible active transportation projects may include, at the discretion of the local jurisdiction, but are not limited to, bicycle and pedestrian projects and costs for associated studies or plans. If, after at least ten years of revenue collection, the local jurisdiction's governing body makes a finding that the reserve for active transportation projects is no longer necessary, and the Authority Board of Directors subsequently approves the finding, then all Local Mobility funds allocated to the jurisdiction may be used for any eligible purpose.

Local Mobility projects are defined as local street and road construction, repair, and maintenance and other eligible local transportation priorities. Except as set forth herein, Local Mobility funds can be used flexibly for any eligible transportation purpose determined to be a local priority, including local roads, major streets, state highway improvements, transit, including but not limited to, fare subsidies and service enhancements for seniors and persons with disabilities, and other improvements/programs to maximize use of transportation facilities. Expenditure of Local Mobility funds shall be based upon a Five-Year Plan adopted annually by the governing body of each local jurisdiction after being made available for public review and comment. Local Mobility funds shall be disbursed to local jurisdictions upon receipt of the annually adopted Five-Year Plan. The locally adopted Five-Year Plans shall be consistent with other local, regional, and state transportation plans.

C. Regional Mobility 20%. Regional priorities that focus on goods movement, transit, managed lanes, congestion management, and emerging transportation technologies to enhance regional movement and include: highway improvements, bus and passenger rail (capital and rehabilitation), corridors, interchanges, environmental mitigation, traffic management systems (freeway service patrol and air quality strategies), planning and project development, and emerging transportation technology.

DRAFT

Revenue collected within each Subarea shall be reserved in a special account to be expended on Regional Mobility projects of benefit to the Subarea. Regional Mobility projects are defined as major streets and highways serving as primary routes of travel within the Subarea, which may include State highways and freeways, where appropriate. Regional Mobility Projects funds can be used to leverage state and federal funds for transportation projects and to perform advance planning/project reports. Expenditure of Regional Mobility funds shall be approved by the Authority Board of Directors, based upon a recommendation of Subarea representatives and the Mountain/Desert Policy Committee. If, after five years of revenue collection and every five years thereafter, the local representatives and the Mountain/Desert Policy Committee make a finding that Regional Mobility funds are not required for improvements of benefit to the Subarea, then revenue in the Regional Mobility category may be returned to local jurisdictions within the Subarea. Such return shall be allocated and expended based upon the formula and requirements established in the Local Mobility category.

D. Operations 10%. Resourcing the operational costs for providing mobility services via rail, transit, senior and specialized services, first/last mile connections, ridesharing, and safety support functions. Decisions on how Operations funds are expended will be made by the Authority Board of Directors, based upon recommendation of Subarea representatives and the Mountain/Desert Policy Committee and/or Transit Committee. Funding priorities shall be given to maintaining core services across all modes of mobility services.

The Authority Board of Directors, based upon recommendation of Subarea representatives and the Mountain/Desert Policy Committee, may provide additional funding beyond 10% upon a finding that such increase is required to address unmet transit needs of the Subarea. All increases above the 10% initial revenue collected for the Operations category shall come from the Local Mobility category of the Subarea.

E. Mountain/Desert Policy Committee. The Mountain/Desert Policy Committee of the Authority shall remain in effect and provide oversight of the implementation of the Mountain/Desert Expenditure Plan.

DRAFT

Measure "I"
Transportation Expenditure Plan

FIGURE A
San Bernardino Valley Subarea Expenditure Plan

Local Mobility 25%

Local priorities that focus on local roadway, bikeway, and sidewalk construction, repair and maintenance for improved localized movement. Includes pass through for local priorities.

- Local Street Widening & Rehabilitation
- Potholes
- Grade Separations
- Sidewalks
- Bike Lanes
- Streetlights
- Quiet Zones

Regional Mobility 50%

Regional priorities that focus on goods movement, transit, managed lanes, congestion management, and emerging transportation technologies to enhance regional movement.

- Highway Improvements
  - Managed Lanes
- Bus and Passenger Rail
  - Capital and Rehabilitation
- Corridors
  - Roadway, Transit, ATP
- Interchanges
- Environmental Mitigation
- Traffic Management Systems
  - Freeway Service Patrol
  - Air Quality Strategies
- Planning and Project Development
- Emerging Transportation Technology
- Quiet Zones

Operations 25%

Resourcing the operational costs for providing mobility services via transit, senior and specialized services, first/last mile connections, and safety support functions.

- Transit Operations
  - Bus, Rail, Innovative Technology
  - Student, Senior and Disabled Transit
- Traveler Emergency Network
- Vanpool/Ride Share
- First/Last Mile

DRAFT

FIGURE B
Mountain Desert Expenditure Plan



DRAFT

Exhibit "B"

Independent Taxpayer Oversight Committee (ITOC)

ITOC Goal and Function. Voter approval of this Measure shall result in the continuation of the existing Independent Taxpayer and Oversight Committee (ITOC) as follows:

The ITOC shall provide citizen review to ensure that all Measure funds are spent by the San Bernardino County Transportation Authority (hereby referred to as the Authority) in accordance with provisions of the Expenditure Plan and Ordinance No. 26-1, Measure I and the Measure I Expenditure Plan.

Audit Requirement. A bi-annual fiscal and compliance audit shall be performed in accordance with generally accepted auditing standards and Government Auditing Standards issued by the Comptroller General of the United States. The audit shall review the basic financial statements of the Authority as defined by the Governmental Accounting Standards Board and the financial and compliance audits of the member jurisdictions.

Role of Financial and Compliance Audit and the ITOC. The ITOC shall review the annual audits of the Authority; report findings based on the audits to the Authority; and recommend any additional audits for consideration that the ITOC believes may improve the financial operation and integrity of program implementation.

The Authority shall hold a publicly noticed meeting, which may or may not be included on the agenda of a regularly scheduled Authority Board of Directors meeting, with the participation of the ITOC to consider the findings and recommendations of the audits.

Membership and Selection Process. The Authority shall have an open process to select five committee members, which shall include solicitation of trade and other organizations to suggest potential nominees to the committee. The committee members shall possess one of the following credentials:

- Professional in the field of municipal audit, finance and/or budgeting with a minimum of five years in a relevant and senior decision-making position in the public or private sector.

- Licensed civil engineer or trained transportation planner with at least five years of demonstrated experience in the fields of transportation and/or urban design in government and/or the private sector. No member shall be a recipient or sub-recipient of Measure funding.

- Three public members who possess knowledge and skills that will be helpful to the work of the ITOC.

DRAFT

The Chair and the Executive Director of the Authority shall serve as ex-officio members of the ITOC.

Terms and Conditions for Committee. Committee members shall serve staggered four-year terms. In no case shall any voting committee member serve more than twelve years on the ITOC.

- Committee members shall serve without compensation, except they shall be reimbursed for authorized travel and other expenses directly related to the work of the ITOC.
- Committee members cannot be a current local elected official in the County or a full-time staff member of any city/town, the County government, local transit operator, or state transportation agency.
- Non-voting ex-officio committee members shall serve only as long as they remain incumbents in their respective positions and shall be automatically replaced by their successors in those positions.
- If vacancies on the ITOC occur, for any reason, Authority staff will collaborate with Authority Board members to find an appropriate replacement, within 90 days of the vacancy or as soon thereafter as possible, to fill the remainder of the term.
- When more than one application is received for a vacancy, the General Policy Committee will make a recommendation to the Authority Board of Directors to appoint an applicant to the ITOC.
- When only one application is received, the Board President will recommend to the Board the applicant's appointment to the ITOC.

ITOC Operation Protocols.

- The ITOC shall continue as long as Measure revenues are collected.
- Authority Board of Directors and staff shall fully cooperate with and provide necessary support to ensure the ITOC successfully carries out its duties and obligations.

Conflict of Interest. ITOC voting members shall have no legal action pending against the Authority and are prohibited from acting in any commercial activity directly or indirectly involving the Authority, such as being a consultant during their tenure on the ITOC. ITOC voting members shall not have direct commercial interest or employment with any public or private entity that receives the transportation tax funds authorized by the voters in this Ordinance.

Exhibit C (Ballot Question)

Measure "I" Local Transportation Improvement Program

San Bernardino County Road Repair/Traffic Relief Extension
Without raising tax rates, shall an ordinance to fund repairing potholes; keeping local roads in good condition; completing freeway/highway projects to improve traffic flow/safety, reduce traffic bottlenecks;

DRAFT

upgrading aging bridges/overpasses; creating local jobs; keeping student/senior/disabled/veteran transit fares low be adopted, extending the ½¢ voter-approved transportation sales tax, providing approximately $250,000,000 annually until ended by voters, requiring audits, oversight, spending disclosure, local control?

DRAFT

Exhibit A

Transportation Expenditure Plan

Revenue Estimates and Distribution. Allocation of revenue authorized by Ordinance No. 26-1 is established within this Expenditure Plan. Funds shall be allocated by percentage of the actual revenue received. An estimate of revenues and allocation among categories for the first 30 years is $7.5 billion. The estimated revenue is based upon 2026 value of money and is not binding or controlling.

Return to Source. After deduction of required CDTFA fees, funds dedicated for the Interregional Mobility Expenditure Plan and authorized administrative costs, revenues generated from each specified Subarea within San Bernardino County will be expended on projects of direct benefit to that Subarea. Revenues will be accounted for separately for each Subarea and then allocated to specified project categories. Decisions on how revenues for certain project categories are expended within the Subareas will be made by the Authority Board of Directors, based upon recommendation of local representatives.

Subarea Identification. The San Bernardino Valley Subarea will include the cities of Chino, Chino Hills, Colton, Fontana, Grand Terrace, Highland, Loma Linda, Montclair, Ontario, Rancho Cucamonga, Redlands, Rialto, San Bernardino, Upland and Yucaipa and unincorporated areas in the east and west portions of the San Bernardino valley urbanized area. The Mountain/Desert area will include the following subareas: (1) The North Desert Subarea, which includes the City of Barstow and surrounding unincorporated areas; (2) The Colorado River Subarea, which includes the City of Needles and the surrounding unincorporated areas of the East Desert; (3) The Morongo Basin Subarea, which includes the City of Twentynine Palms, Town of Yucca Valley, and surrounding unincorporated areas; (4) The Mountain Subarea, which includes the City of Big Bear Lake and surrounding unincorporated areas of the San Bernardino Mountains; and (5) the Victor Valley Subarea, which includes the Cities of Adelanto, Hesperia, and Victorville; the Town of Apple Valley; and surrounding unincorporated areas including Wrightwood.

Contribution from New Development. No revenue generated from the tax shall be used to replace the fair share contributions required from new development as further described in Section 8 of the Ordinance.

Requirement for Annual Financial and Compliance Audits of Measure Funds. The San Bernardino County Transportation Authority shall undergo a biennial financial audit, and each local jurisdiction receiving an allocation of Measure revenue authorized in this Expenditure Plan shall undergo an annual financial audit, with all audits to be performed in accordance with generally accepted auditing standards and government auditing standards issued by the Comptroller General of the United States. Compliance audits also shall be conducted to ensure that each agency is expending funds in accordance with the provisions and guidelines established for Measure revenue including compliance with Maintenance of Effort provisions

The Interregional Mobility Expenditure Plan. Upon initial collection of revenue, 3% of the revenue generated across all San Bernardino County subareas will be reserved in advance of other allocations specified in this plan, in an account for the Interregional Mobility Expenditure Plan. The Interregional Mobility Expenditure Plan will provide resources for the planning and implementation of projects and programs that provide critical infrastructure to communities impacted by regional motorist, tourism, interregional travel, and goods movement. This program will help plan and deliver critical infrastructure improvements, such as enhancements in the Cajon Pass and other key corridors, that address congestion,

enhance mobility, improve safety, and strengthen resilience. It will also support evacuation planning, bolster emergency response capabilities, improve primary evacuation routes, and fund transit-related evacuation needs. In addition, the program will be available to address unexpected infrastructure damage resulting from natural or human-caused disasters, ensuring rapid recovery and the restoration of essential interregional mobility.

San Bernardino Valley Subarea Expenditure Plan. In that area described as the San Bernardino Valley Subarea, and referred to herein as the Valley Subarea, project categories shall be established as specified below. The San Bernardino Valley Subarea Expenditure Plan is illustrated in Figure A.

A. State and Federal Transportation Funds. A proportional share of projected state and federal transportation funds shall be reserved for use solely within the Valley Subarea.

B. Local Mobility 25%. Local priorities that focus on local roadway, bikeway, and sidewalk construction, repair, and maintenance for improved localized movement. Includes pass through for local priorities such as: local street widening & rehabilitation, potholes, grade separations, sidewalks, bike lanes, streetlights, and quiet zones. Allocations to local jurisdictions shall be on a per capita basis using the most recent State Department of Finance population estimates for January 1, with the County's portion based upon unincorporated population in the Valley Subarea. Estimates of unincorporated population within the Valley Subarea shall be determined by the County Planning Department, reconciled with the State Department of Finance population estimate for January 1 of each year.

Upon initial collection of revenue, each local jurisdiction shall reserve 5% of allocated revenue in a special account to be expended on active transportation projects. Eligible active transportation projects may include, at the discretion of the local jurisdiction, bicycle and pedestrian projects and costs for associated studies or plans. If, after at least ten years of revenue collection, the local jurisdiction's governing body makes a finding that the reserve for active transportation projects is no longer necessary, and the Authority Board of Directors subsequently approves the finding, then all Local Mobility funds allocated to the local jurisdiction may be used for any eligible purpose.

Local Mobility projects are defined as local street and road construction, repair, and maintenance and other eligible local transportation priorities. Except as set forth herein, Local Mobility funds can be used flexibly for any eligible transportation purpose determined to be a local priority, including local streets, major highways, state highway improvements, transit, and other improvements/programs to maximize use of transportation facilities. Expenditure of Local Mobility funds shall be based upon a Five-Year Plan adopted annually by the governing body of each local jurisdiction after being made available for public review and comment. Local Mobility funds shall be disbursed to local jurisdictions upon receipt of the annually adopted Five-Year Plan. The locally adopted Five-Year Plan shall be consistent with local, regional, and state transportation plans.

C. Regional Mobility 50%. Regional priorities that focus on goods movement, transit, managed lanes, congestion management, and emerging transportation technologies to enhance regional movement and include: highway improvements, bus and passenger rail (capital and rehabilitation), corridors, interchanges, environmental mitigation, traffic management systems (freeway service patrol and air quality strategies), quiet zones, planning and project development, and emerging transportation technology.

Regional Mobility projects are defined as congestion relief and safety improvements to corridors that connect communities, serve major destinations, and provide freeway access. Decisions on how Regional Mobility funds are expended will be made by the Authority Board of Directors, based upon recommendation of local jurisdiction representatives. Funding priorities shall be given to improving roadway safety, relieving congestion, and street improvements at rail crossings and shall take into

DRAFT

account equitable geographic distribution over the life of the program. Eligible projects also include, but are not limited to, signal synchronization, systems to improve traffic flow, commuter assistance programs, freeway service patrol, and projects that contribute to environmental enhancement associated with transportation facilities.

D. Operations 25%. Resourcing the operational costs for providing mobility services via rail, transit, senior and specialized services, first/last mile connections, ridesharing, and safety support functions. Decisions on how Operations funds are expended will be made by the Authority Board of Directors, based upon recommendations of local jurisdiction representatives. Funding priorities shall be given to maintaining core services across all modes of mobility.

Mountain/Desert Expenditure Plan. In that area described as the Mountain/Desert area, the following Expenditure Plan requirements shall apply. The Mountain/Desert Subarea Expenditure Plan is illustrated in Figure B.

A. State and Federal Transportation Funds. A proportional share of projected state and federal transportation funds shall be reserved for use solely within the Mountain/Desert Subareas.

B. Local Mobility 70%. Local priorities that focus on local roadway, bikeway, and sidewalk construction, repair, and maintenance for improved localized movement. Includes pass through for local priorities such as: local street widening & rehabilitation, potholes, grade separations, sidewalks, bike lanes, and streetlights. Allocations to local jurisdictions shall be based upon population (50 percent) and tax generation (50 percent). Population calculations shall be based upon the most current State Department of Finance estimates for January 1 of each year. Estimates of unincorporated population within each Subarea shall be determined by the County Planning Department, reconciled with the State Department of Finance population estimate. Tax generation calculations shall be based upon CDTFA data.

Upon initial collection of revenue, each local jurisdiction shall reserve 5% of allocated revenue in a special account to be expended on active transportation projects. Eligible active transportation projects may include, at the discretion of the local jurisdiction, but are not limited to, bicycle and pedestrian projects and costs for associated studies or plans. If, after at least ten years of revenue collection, the local jurisdiction's governing body makes a finding that the reserve for active transportation projects is no longer necessary, and the Authority Board of Directors subsequently approves the finding, then all Local Mobility funds allocated to the jurisdiction may be used for any eligible purpose.

Local Mobility projects are defined as local street and road construction, repair, and maintenance and other eligible local transportation priorities. Except as set forth herein, Local Mobility funds can be used flexibly for any eligible transportation purpose determined to be a local priority, including local roads, major streets, state highway improvements, transit, including but not limited to, fare subsidies and service enhancements for seniors and persons with disabilities, and other improvements/programs to maximize use of transportation facilities. Expenditure of Local Mobility funds shall be based upon a Five-Year Plan adopted annually by the governing body of each local jurisdiction after being made available for public review and comment. Local Mobility funds shall be disbursed to local jurisdictions upon receipt of the annually adopted Five-Year Plan. The locally adopted Five-Year Plans shall be consistent with other local, regional, and state transportation plans.

C. Regional Mobility 20%. Regional priorities that focus on goods movement, transit, managed lanes, congestion management, and emerging transportation technologies to enhance regional movement and include: highway improvements, bus and passenger rail (capital and rehabilitation), corridors, interchanges, environmental mitigation, traffic management systems (freeway service patrol and air quality strategies), planning and project development, and emerging transportation technology.

DRAFT

Revenue collected within each Subarea shall be reserved in a special account to be expended on Regional Mobility projects of benefit to the Subarea. Regional Mobility projects are defined as major streets and highways serving as primary routes of travel within the Subarea, which may include State highways and freeways, where appropriate. Regional Mobility Projects funds can be used to leverage state and federal funds for transportation projects and to perform advance planning/project reports. Expenditure of Regional Mobility funds shall be approved by the Authority Board of Directors, based upon a recommendation of Subarea representatives and the Mountain/Desert Policy Committee. If, after five years of revenue collection and every five years thereafter, the local representatives and the Mountain/Desert Policy Committee make a finding that Regional Mobility funds are not required for improvements of benefit to the Subarea, then revenue in the Regional Mobility category may be returned to local jurisdictions within the Subarea. Such return shall be allocated and expended based upon the formula and requirements established in the Local Mobility category.

D. Operations 10%. Resourcing the operational costs for providing mobility services via rail, transit, senior and specialized services, first/last mile connections, ridesharing, and safety support functions. Decisions on how Operations funds are expended will be made by the Authority Board of Directors, based upon recommendation of Subarea representatives and the Mountain/Desert Policy Committee and/or Transit Committee. Funding priorities shall be given to maintaining core services across all modes of mobility services.

The Authority Board of Directors, based upon recommendation of Subarea representatives and the Mountain/Desert Policy Committee, may provide additional funding beyond 10% upon a finding that such increase is required to address unmet transit needs of the Subarea. All increases above the 10% initial revenue collected for the Operations category shall come from the Local Mobility category of the Subarea.

E. Mountain/Desert Policy Committee. The Mountain/Desert Policy Committee of the Authority shall remain in effect and provide oversight of the implementation of the Mountain/Desert Expenditure Plan.

DRAFT

Measure "I"
Transportation Expenditure Plan

FIGURE A
San Bernardino Valley Subarea Expenditure Plan

Local Mobility 25%

Local priorities that focus on local roadway, bikeway, and sidewalk construction, repair and maintenance for improved localized movement. Includes pass through for local priorities.

- Local Street Widening & Rehabilitation
- Potholes
- Grade Separations
- Sidewalks
- Bike Lanes
- Streetlights
- Quiet Zones

Regional Mobility 50%

Regional priorities that focus on goods movement, transit, managed lanes, congestion management, and emerging transportation technologies to enhance regional movement.

- Highway Improvements
  - Managed Lanes
- Bus and Passenger Rail
  - Capital and Rehabilitation
- Corridors
  - Roadway, Transit, ATP
- Interchanges
- Environmental Mitigation
- Traffic Management Systems
  - Freeway Service Patrol
  - Air Quality Strategies
- Planning and Project Development
- Emerging Transportation Technology
- Quiet Zones

Operations 25%

Resourcing the operational costs for providing mobility services via transit, senior and specialized services, first/last mile connections, and safety support functions.

- Transit Operations
  - Bus, Rail, Innovative Technology
  - Student, Senior and Disabled Transit
- Traveler Emergency Network
- Vanpool/Ride Share
- First/Last Mile

DRAFT

FIGURE B
Mountain Desert Expenditure Plan



DRAFT

Exhibit "B"

Independent Taxpayer Oversight Committee (ITOC)

ITOC Goal and Function. Voter approval of this Measure shall result in the continuation of the existing Independent Taxpayer and Oversight Committee (ITOC) as follows:

The ITOC shall provide citizen review to ensure that all Measure funds are spent by the San Bernardino County Transportation Authority (hereby referred to as the Authority) in accordance with provisions of the Expenditure Plan and Ordinance No. 26-1, Measure I and the Measure I Expenditure Plan.

Audit Requirement. A bi-annual fiscal and compliance audit shall be performed in accordance with generally accepted auditing standards and Government Auditing Standards issued by the Comptroller General of the United States. The audit shall review the basic financial statements of the Authority as defined by the Governmental Accounting Standards Board and the financial and compliance audits of the member jurisdictions.

Role of Financial and Compliance Audit and the ITOC. The ITOC shall review the annual audits of the Authority; report findings based on the audits to the Authority; and recommend any additional audits for consideration that the ITOC believes may improve the financial operation and integrity of program implementation.

The Authority shall hold a publicly noticed meeting, which may or may not be included on the agenda of a regularly scheduled Authority Board of Directors meeting, with the participation of the ITOC to consider the findings and recommendations of the audits.

Membership and Selection Process. The Authority shall have an open process to select five committee members, which shall include solicitation of trade and other organizations to suggest potential nominees to the committee. The committee members shall possess one of the following credentials:

- Professional in the field of municipal audit, finance and/or budgeting with a minimum of five years in a relevant and senior decision-making position in the public or private sector.

- Licensed civil engineer or trained transportation planner with at least five years of demonstrated experience in the fields of transportation and/or urban design in government and/or the private sector. No member shall be a recipient or sub-recipient of Measure funding.

- Three public members who possess knowledge and skills that will be helpful to the work of the ITOC.

DRAFT

The Chair and the Executive Director of the Authority shall serve as ex-officio members of the ITOC.

Terms and Conditions for Committee. Committee members shall serve staggered four-year terms. In no case shall any voting committee member serve more than twelve years on the ITOC.

- Committee members shall serve without compensation, except they shall be reimbursed for authorized travel and other expenses directly related to the work of the ITOC.
- Committee members cannot be a current local elected official in the County or a full-time staff member of any city/town, the County government, local transit operator, or state transportation agency.
- Non-voting ex-officio committee members shall serve only as long as they remain incumbents in their respective positions and shall be automatically replaced by their successors in those positions.
- If vacancies on the ITOC occur, for any reason, Authority staff will collaborate with Authority Board members to find an appropriate replacement, within 90 days of the vacancy or as soon thereafter as possible, to fill the remainder of the term.
- When more than one application is received for a vacancy, the General Policy Committee will make a recommendation to the Authority Board of Directors to appoint an applicant to the ITOC.
- When only one application is received, the Board President will recommend to the Board the applicant's appointment to the ITOC.

ITOC Operation Protocols.

- The ITOC shall continue as long as Measure revenues are collected.
- Authority Board of Directors and staff shall fully cooperate with and provide necessary support to ensure the ITOC successfully carries out its duties and obligations.

Conflict of Interest. ITOC voting members shall have no legal action pending against the Authority and are prohibited from acting in any commercial activity directly or indirectly involving the Authority, such as being a consultant during their tenure on the ITOC. ITOC voting members shall not have direct commercial interest or employment with any public or private entity that receives the transportation tax funds authorized by the voters in this Ordinance.

Exhibit C (Ballot Question)

Measure "I" Local Transportation Improvement Program

San Bernardino County Road Repair/Traffic Relief Extension
Without raising tax rates, shall an ordinance to fund repairing potholes; keeping local roads in good condition; completing freeway/highway projects to improve traffic flow/safety, reduce traffic bottlenecks;

DRAFT

upgrading aging bridges/overpasses; creating local jobs; keeping student/senior/disabled/veteran transit fares low be adopted, extending the ½¢ voter-approved transportation sales tax, providing approximately $250,000,000 annually until ended by voters, requiring audits, oversight, spending disclosure, local control?

DRAFT

City Council Meeting **J. 2.**

DATE: 03/03/2026

TO: Honorable Mayor and City Council Members

SUBJECT: Consideration of a Public Works Construction Contract with CSI Services for the Water Facilities Generators Project in an amount not-to-exceed $3,477,000, and determination that the Project is categorically exempt from environmental review pursuant to Section 15303 of the State's Guidelines for Implementing the California Environmental Quality Act (Interim Municipal Utilities and Engineering Director Casey)

MOTION(S):

If the City Council determines that staff's recommendation is appropriate, the following motions are provided:

1. I move that the City Council determine that approval of the contract and construction of the Water Facilities Generators Project as categorically exempt from environmental review in accordance with Section 15303 of the State's guidelines implementing the California Environmental Quality Act; and

2. I move that the City Council approve the Water Facilities Generators Project Plans and Specifications; and award a Public Works Construction Contract to CSI Services for an amount not-to-exceed $3,477,000.

RECOMMENDATION:

Staff recommends that City Council determine approval of a Public Works Construction Contract and construction of the Water Facilities Generators Project as categorically exempt from environmental review in accordance with Section 15303 of the State's guidelines implementing the California Environmental Quality Act. Staff further recommends City Council approve the Water Facilities Generators Project Plans and Specifications and award a Public Works Construction Contract to CSI Services for an amount not-to-exceed $3,477,000.

DISCUSSION:

In December 2021, the Municipal Utilities and Engineering Department (MUED) certified compliance with the American Water Infrastructure Act (AWIA). This legislation requires community water systems to perform a risk and resiliency assessment to evaluate water utility best practices and potential vulnerabilities to malevolent acts or natural hazards that threaten the security or resiliency of a community water system. One element that was evaluated and recommended for improvement is the installation of emergency power supply systems at the Agate Pump Station, 5th Avenue Pump Station, Country Club Pump Station, and Texas Street Pump Station. To address this recommendation, staff prepared a Request for Proposals for the design of emergency power supply systems at four (4) locations. In May 2023, City Council approved a Professional Services Agreement with Richard Brady and Associates (Brady) for this project. Brady completed the design in April 2024. In September 2024, City Council approved the purchase of four (4) Caterpillar emergency power generators that meet the specifications recommended by Brady.

Staff advertised the installation of the emergency generators for bidding using the plans and specifications prepared by Brady. On December 17, 2025, the City Clerk's Office received and opened the following four (4) bids for the Project:

BID OPENING REPORT SUMMARY				
Bidders	**Base Bid***	**Base Bid + Additive Bid "A"**	**Base Bid + Additive Bid "A" + "B"**	**Base Bid + Additive Bid "A" + "B" + "C"**
CSI Services, San Pedro, CA	$662,000.00	$1,365,000.00	$2,699,000.00	$3,477,000.00
Roadway Engineering & Construction Corp., Perris, CA	$759,200.00	$1,549,200.00	$3,113,400.00	$3,988,400.00
Makone Development, Los Angeles, CA	$844,103.09	$1,866,281.35	$4,161,728.57	$5,422,193.67
Mehta Mechanical Company, Inc., La Palma, CA	$885,000.00	$1,820,000.00	$3,725,000.00	$4,905,000.00

*Bid amounts sorted using Base Bid.

Each bid was reviewed by staff to assess compliance with bid requirements, and CSI Services was determined to be the lowest responsive bidder. Staff recommends awarding a Public Works Contract to CSI Services for an amount not-to-exceed $3,477,000. The Project will be completed within two hundred (200) working days after the date of issuance of a Notice to Proceed to the Contractor.

This project is categorically exempt from environmental review in accordance with Section 15303 of the State's guidelines implementing the California Environmental Quality Act, as the Project involves the installation of new, small-scale equipment at existing facilities and does not result in a significant expansion of use or environmental impact.

ALTERNATIVES:

City Council may deny the staff recommendation and provide alternate direction.

STRATEGIC PLAN:

N/A

SUBMITTED BY:

Ray Casey, Interim Municipal Utilities and Engineering Director

RECOMMENDED BY:

Charles M. Duggan Jr., City Manager

REVIEWED BY:

Yvette M. Abich Garcia, City Attorney
Janice McConnell, Assistant City Manager
Danielle Garcia, Management Services/Finance Director
Goutam K. Dobey, City Engineer

PREPARED BY:

Veronica Noriega, Associate Engineer

Fiscal Impact

Fiscal Year: FY 25/26
Appropriation Required Y/N: No
Budgeted Y/N: Yes
Account No.: 501910
Discussion:

There is no fiscal impact associated with this action. The FY 25/26 MUED Budget includes funding for this project.

Attachments

A. CSI Public Works Contract
B. Bid Opening Report
C. Bid Analysis
D. Location Map
Water Facilities Generator Plans
Water Facilities Generator Specifications

PUBLIC WORK CONSTRUCTION CONTRACT

This Public Work Construction contract ("Contract") is made and entered into this 3rd day of March, 2026, by and between the City of Redlands, a municipal corporation, organized and existing under the laws of the State of California (hereinafter "City"), and CSI Services (hereinafter "Contractor"). City and Contractor are sometimes individually referred to herein as a "Party" and, together, as the "Parties."

In consideration of the mutual promises contained herein, City and Contractor agree as follows:

1. **SCOPE OF WORK:** Contractor shall furnish all materials and will perform all of the work for the following: Water Facilities Generator Project, complete all items as required by the Contract Documents (as herein defined) and Specifications for City's Water Facilities Generator Project, Project No. 501028 (the "Work").

2. **CONTRACT SUM:** City shall pay Contractor the sum of Three Million Four Hundred Seventy-Seven Thousand dollars ($3,477,000) as consideration for its performance of the Work in accordance with the terms and conditions set forth in the Contract Documents. Pursuant to Public Contract Code Section 22300, Contractor has the option to deposit securities with an escrow agent as a substitute for retention of earnings required to be withheld by City pursuant to an escrow agreement as set forth in Public Contract Code section 22300.

3. **TIME FOR COMPLETION:** The Work shall be completed within two hundred (200) working day(s) as defined in Section 1-2 of the Standard Specifications for Public Works Construction "Greenbook" from and after the date of City's issuance of a Notice to Proceed to Contractor.

4. **LIQUIDATED DAMAGES:** Contractor's failure to complete the Work within the time allowed will result in damages being sustained by City. Such damages are, and will continue to be, impracticable and extremely difficult to determine. Accordingly, Contractor shall pay to City, or have withheld from monies due to Contractor, the sum of five hundred dollars ($500) for each working day as defined in Section 1-2 of the Standard Specifications for Public Works Construction "Greenbook" in excess of the specified time for completion of the Work. Execution of this Contract shall constitute agreement by City and Contractor that five hundred dollars ($500) per day is the estimated damage to City caused by the failure of Contractor to complete the work within the allowed time. Such sum is liquidated damages and shall not be construed as a penalty, and may be deducted from payments due Contractor if such delay occurs.

5. **CONTRACT DOCUMENTS:** This Contract incorporates by reference the following: Notice Inviting Bids, Instructions to Bidders, Contractor's Proposal, Bid Bond, Agreement, Performance Bond, Labor and Material Bond, Plans, General Conditions, Special Provisions and Specifications, and any addenda thereto (collectively, the "Contract Documents").

6. **ATTORNEYS' FEES:** In the event any action is commenced to enforce or interpret the terms or conditions of this Contract, or the Contract Documents, the prevailing Party in such action, in addition to any costs and other relief, shall be entitled to recover its reasonable attorneys' fees, including fees for use of in-house counsel by a Party.

7. **RESOLUTION OF CONSTRUCTION CLAIMS:** Claims by Contractor in the amount of three hundred seventy-five thousand dollars ($375,000) or less shall be made by Contractor and

processed by the City pursuant to the provisions of Part 3, Chapter 1, Article 1.5 of the Public Contract Code (commencing with Section 20104). All claims shall be in writing and include the documents necessary to substantiate the claim. Nothing in subdivision (a) of Public Contract Code Section 20104.2 shall extend the time limit or supersede the notice requirements provided in this case from filing claims by Contractor.

8. **ELIGIBILITY OF CONTRACTOR/SUBCONTRACTOR:** Contractor and all of its subcontractors shall abide by California Public Contract Code, Section 6109, and California Labor Code Sections 1777.1 and/or 1777.7, and certify that they are not debarred and are eligible to work on this project.

9. **ASSIGNMENT OF AGREEMENT:** No assignment by a Party of any rights or interests under this Contract shall be binding on another Party without the written consent of the Party sought to be bound.

10. **SUCCESSORS AND ASSIGNS:** City and Contractor each binds itself and their respective successors and assigns in respect to all covenants, agreements, and obligations contained in the Contract Documents.

11. **SEVERABILITY:** Any provision or part of the Contract Documents held to be void or unenforceable under any law or regulation shall be deemed stricken, and all remaining provisions shall continue to be valid and binding upon City and Contractor.

Signatures on following page

IN WITNESS WHEREOF, the Parties hereto have executed this Contract the day and year first written above.

CITY OF REDLANDS

(SEAL)

By:_____
Mario Saucedo, Mayor

ATTEST:

_____
Jeanne Donaldson, City Clerk

(SEAL)

CSI Services_____
Name of Contractor

By:_____
Signature of Authorized Agent

Frank Colaruotolo, President_____
Title

_____
Signature of Authorized Agent (if necessary)

_____
Title

_____
Contractor's License No.

WORKER'S COMPENSATION INSURANCE CERTIFICATION

Description of Contract: City of Redlands
Municipal Utilities and Engineering Department
Water Facilities Generators Project
Project No. 501028

Every employer, except the State, shall secure the payment of compensation in one or more of the following ways:

a. By being insured against liability to pay compensation by one or more insurers duly authorized to write compensation insurance in this State.
b. By securing from the Director of Industrial Relations, a certificate of consent to self-insure, either as an individual employer, or as one employer in a group of employers, which may be given upon furnishing proof satisfactory to the Director of Industrial Relations of ability to self-insure and to pay any compensation that may become due to his or her employees.

CHECK ONE

_____I am aware of the provisions of Section 3700 of the Labor Code which requires every employer to be insured against liability for Workers' Compensation or to undertake self-insurance in accordance with the provisions of that Code, and I will comply with such provisions before commencing the performance of the work and activities required or permitted under this Agreement. (Labor Code §1861).

_____I affirm that at all times, in performing the work and activities required or permitted under this Agreement, I shall not employ any person in any manner such that I become subject to the workers' compensation laws of California. However, at any time, if I employ any person such that I become subject to the workers' compensation laws of California, immediately I shall provide the City with a certificate of consent to self-insure, or a certification of workers' compensation insurance.

I certify under penalty of perjury under the laws of the State of California that the information and representations made in this certificate are true and correct.

Dated this _____ day of _____, 2026.

CSI Services_____
(Contractor)

_____
(Signature)

Frank Colaruotolo, President_____
(Official Title)

(SEAL)

(Labor Code Section 1861 provides that the above certificate must be signed and filed by the Contractor with the Owner prior to performing the work of the contract.)

FAITHFUL PERFORMANCE BOND

Whereas, the City of Redlands ("City"), State of California, and CSI Services (hereinafter designated as "Principal") have entered into an agreement dated March 3, 2026 ("Agreement") whereby Principal agrees to install and complete certain public improvements (the "Work"), which said Agreement is identified as Water Facilities Generator Project, Project No. 501028 and is hereby referred to and made a part hereof; and

Whereas, said Principal is required under the terms of the Agreement to furnish a bond for the faithful performance of the Work, now, therefore, we, the Principal and, _____, as Surety, are held and firmly bound unto the City in the penal sum of Three Million Four Hundred Seventy-Seven Thousand dollars ($3,477,000) lawful money of the United States, for the payment of which sum we bind ourselves, and our heirs, successors, executors and administrators, jointly and severally, firmly by these presents.

The condition of this obligation is such that if the above bounded Principal, his or its heirs, executors, administrators, successors or assigns, shall in all things stand to and abide by, and well and truly keep and perform the covenants, conditions and provisions in the Agreement and any alteration thereof made as therein provided, on his or its part, to be kept and performed at the time and in the manner therein specified, and in all respects according to their true intent and meaning, and shall faithfully fulfill the one-year guarantee of all materials and workmanship, and shall defend, indemnify and save harmless the City and its elected officials, officers, agents and employees, as therein stipulated, then this obligation shall become null and void; otherwise it shall be and remain in full force and effect.

As a part of the obligation secured hereby and in addition to the face amount specified therefor, there shall be included costs and reasonable expenses and fees, including reasonable attorneys' fees, incurred by the City in successfully enforcing such obligations, all to be taxed as costs and included in the judgment rendered.

As a condition precedent to the satisfactory completion of the Work, the above obligation shall hold good for a period of one (1) year or longer if required by the Agreement after the acceptance of the work by the City, during which time if the Principal shall fail to make full, complete, and satisfactory repair and replacements and totally protect the City from loss or damage made evident during this period from the date of completion of the Work, and resulting from or caused by defective materials or faulty workmanship, the above obligation in penal sum thereof shall remain in full force and effect. The obligations of Surety hereunder shall continue so long as any obligation of the Principal remains.

Whenever the Principal shall be, and is declared by the City to be, in default under the Agreement, the City having performed the City obligations thereunder, the Surety shall promptly remedy the default, or shall promptly, at the City's option:

1. Complete the Work in accordance with its terms and conditions; or

2. Obtain a bid or bids for completing the Work in accordance with its terms and conditions, and upon determination by Surety of the lowest responsive and responsible bidder, arrange for a contract between such bidder and the City, and make available as work progresses sufficient funds to pay the cost of completion of the Work less the balance of the Agreement price,

but not exceeding, including other costs and damages for which Surety may be liable hereunder, the amount set forth above. The term "balance of the Agreement price," as used in this paragraph, shall mean the total amount payable to the Principal by the City under the Agreement and any modifications thereto, less the amount previously properly paid by the City to the Principal.

Surety expressly agrees that the City may reject any contractor or subcontractor which may be proposed by Surety in fulfillment of its obligations in the event of default by the Principal.

Surety shall not utilize the Principal in completing the Work nor shall Surety accept a bid from the Principal for completion of the Work if the City, when declaring the Principal in default, notifies Surety of the City's objection to the Principal's further participation in the completion of the Work.

No right of action shall accrue on the bond to or for the use of any person or corporation other than the City named herein or the successors or assigns of the City. Any suit under this bond must be instituted within the applicable statute of limitations period.

The said Surety, for value received, hereby stipulates and agrees that no change, extension of time, alteration or addition to the terms of the Agreement or to the work to be performed thereunder or the Specifications accompanying the same shall in any way affect its obligations on this bond, and it does hereby waive notice of any such change, extension of time, alteration or addition to the terms of the Agreement or to the work or to the specifications.

No final settlement between the City and the Principal shall abridge the right of any beneficiary hereunder whose claim may be unsatisfied.

The Principal and Surety agree that if the City is required to engage the services of any attorney in connection with the enforcement of this bond, each shall pay the City's reasonable attorneys' fees incurred, with or without suit, in addition to the above sum.

In witness whereof, this instrument has been duly executed by the Principal and Surety above named, on _____, 2026.

(SEAL)	(SEAL)
_____	_____
(Contractor)	(Surety)
_____	BY: _____
(Signature)	(Signature)
	Address: _____
	_____
(Seal and Notarial Acknowledgment of Surety)	Telephone ( )_____

LABOR AND MATERIAL BOND

Whereas, the City Council of the City of Redlands, State of California, and CSI Services (hereinafter designated as "Principal") have entered into an agreement (the "Agreement") whereby Principal agrees to install and complete certain designated public improvements (the "Work"), which said agreement, dated March 3, 2026, and identified as Water Facilities Generator Project, Project No. 501028 is hereby referred to and made a part hereof; and

Whereas, under the terms of the Agreement, Principal is required before commencing the performance of the Work, to file a good and sufficient Labor and Material bond with the City of Redlands to secure the claims to which reference is made in Title 3 (commencing with Section 9550) of Part 6 of Division 4 of the Civil Code of the State of California.

Now, therefore, said Principal and the undersigned as corporate surety, are held firmly bound unto the City and all contractors, subcontractors, laborers, material men and other persons employed in the performance of the Agreement and referred to in the aforesaid Code of Civil Procedure in the sum of Three Million Four Hundred Seventy-Seven Thousand dollars ($3,477,000) for materials furnished or labor thereon of any kind, or for amounts due under the Unemployment Insurance Act with respect to such work or labor, that said surety will pay the same in an amount not exceeding the amount hereinabove set forth, and also in case suit is brought upon this bond, will pay, in addition to the face amount thereof, costs and reasonable expenses and fees, including reasonable attorneys' fees, incurred by the City in successfully enforcing such obligation, to be awarded and fixed by the court, and to be taxed as costs and to be included in the judgment therein rendered.

It is hereby expressly stipulated and agreed that this bond shall insure to the benefit of any and all persons, companies and corporations entitled to file claims under Title 3 (commencing with Section 9550) of Part 6 of Division 4 of the Civil Code, so as to give a right of action to them or their assigns in any suit brought upon this bond.

Should the condition of this bond be fully performed, then this obligation shall become null and void, otherwise it shall be and remain in full force and effect.

The surety hereby stipulates and agrees that no change, extension of time, alteration or addition to the terms of the Agreement or the specifications accompanying the same shall in any manner affect its obligations on this bond, and it does hereby waive notice of any such change, extension of time, alteration or addition.

In witness whereof, this instrument has been duly executed by the Principal and surety above named, on _____, 2026.

(SEAL)	(SEAL)
_____	_____
(Contractor)	(Surety)
_____	BY: _____
(Signature)	(Signature)
	Address: _____
(Seal and Notarial Acknowledgement of Surety)	_____
	Telephone: ( ) _____

CITY OF REDLANDS
OFFICE OF THE CITY CLERK
BID OPENING REPORT

The following bid was opened on the **17th day of December 2025 at 2:00 p.m.** on behalf of the Municipal Utilities and Engineering Department for **Water Facilities Generators. Project No. 501028.** The bid amounts have not been checked and are subject to correction after the bids have been completely reviewed.

No.	Plan Holder's Name	Bid Cert Page Signed	Bid Bond	(1) Addenda Issued	Base Bid*	Base Bid + Additive Bid "A"	Base Bid + Additive Bid "A" + "B"	Base Bid + Additive Bid "A" + "B" + "C"
1	CSI Services, San Pedro, CA	Cover Page Signed Only	Yes	Yes	$662,000.00	$1,365,000.00	$2,699,000.00	$3,477,000.00
2	Roadway Engineering & Construction Corp., Perris, CA	Yes	Yes	Yes	$759,200.00	$1,549,200.00	$3,113,400.00	$3,988,400.00
3	Makone Development, Los Angeles, CA	Yes	Yes	No	$844,103.09	$1,866,281.35	$4,161,728.57	$5,422,193.67
4	Mehta Mechanical Company, Inc., La Palma, CA	Yes	Yes	Yes	$885,000.00	$1,820,000.00	$3,725,000.00	$4,905,000.00

*Bid Amounts sorted using Base Bid.

Jeanne Donaldson, City Clerk
City of Redlands, California

Emailed: Councilmembers,
City Manager, PIO, Press
Department Head: Ray Casey
Staff: Veronica Medina, Paul Mariscal

CITY OF REDLANDS
MUNICIPAL UTILITIES & ENGINEERING DEPARTMENT
BID ANALYSIS

PROJECT NO. 501028
Water Facilities Generators

BID DATE: 17-Dec-2025
EST. START DATE: 2-Mar-2026

Item No.	Bid Item	Quantity	Unit	CSI Services		Makone Development, Inc.		Mehta Mechanical Company, Inc.	
				Unit Price	Item Price	Unit Price	Item Price	Unit Price	Item Price
1.1	Mobilization / Demobilization (Maximum 5% of total bid price)	1	LS	$20,000.00	$20,000.00	$36,189.69	$36,189.69	$35,000.00	$35,000.00
1.2	Demolition	1	LS	$67,000.00	$67,000.00	$34,480.00	$34,480.00	$90,000.00	$90,000.00
1.3	Civil / Structural	1	LS	$132,000.00	$132,000.00	$110,602.00	$110,602.00	$220,000.00	$220,000.00
1.4	Electrical / Instrumentation	1	LS	$301,000.00	$301,000.00	$446,731.20	$446,731.20	$280,000.00	$280,000.00
1.5	Generator Diesel Particulate Filter Retrofit	1	LS	$51,000.00	$51,000.00	$62,350.20	$62,350.20	$100,000.00	$100,000.00
1.6	Landscape	1	LS	$6,000.00	$6,000.00	$67,500.00	$67,500.00	$50,000.00	$50,000.00
1.7	Best Management Practices	1	LS	$10,000.00	$10,000.00	$11,250.00	$11,250.00	$35,000.00	$35,000.00
1.8	Unforeseen Work Not Covered Within All Other Bid Items	1	LS	$75,000.00	$75,000.00	$75,000.00	$75,000.00	$75,000.00	$75,000.00
	Last Minute Additions/Deductions				$0.00		$0.00		$0.00
	Total Base Bid				**$662,000.00**		**$844,103.09**		**$885,000.00**
Additive Bid "A"									
2.1	Mobilization / Demobilization (Maximum 5% of total bid price)	1	LS	$20,000.00	$20,000.00	$34,482.26	$34,482.26	$35,000.00	$35,000.00
2.2	Demolition	1	LS	$76,000.00	$76,000.00	$23,700.00	$23,700.00	$90,000.00	$90,000.00
2.3	Civil / Structural	1	LS	$170,000.00	$170,000.00	$103,364.25	$103,364.25	$240,000.00	$240,000.00
2.4	Electrical / Instrumentation	1	LS	$301,000.00	$301,000.00	$692,694.00	$692,694.00	$360,000.00	$360,000.00
2.5	Generator Diesel Particulate Filter Retrofit	1	LS	$51,000.00	$51,000.00	$77,937.75	$77,937.75	$100,000.00	$100,000.00
2.6	Best Management Practices	1	LS	$10,000.00	$10,000.00	$15,000.00	$15,000.00	$35,000.00	$35,000.00
2.7	Unforeseen Work Not Covered Within All Other Bid Items	1	LS	$75,000.00	$75,000.00	$75,000.00	$75,000.00	$75,000.00	$75,000.00
	Last Minute Additions/Deductions				$0.00		$0.00		$0.00
	Total Additive Bid "A"				**$703,000.00**		**$1,022,178.26**		**$935,000.00**
	Total Base Bid Plus Additive Bid "A"				**$1,365,000.00**		**$1,866,281.35**		**$1,820,000.00**
Additive Bid "B"									
3.1	Mobilization / Demobilization (Maximum 5% of total bid price)	1	LS	$50,000.00	$50,000.00	$88,726.27	$88,726.27	$65,000.00	$65,000.00
3.2	Demolition	1	LS	$111,000.00	$111,000.00	$100,660.00	$100,660.00	$140,000.00	$140,000.00
3.3	Civil / Structural	1	LS	$399,000.00	$399,000.00	$731,483.20	$731,483.20	$360,000.00	$360,000.00
3.4	Building Retrofit	1	LS	$98,000.00	$98,000.00	$160,500.00	$160,500.00	$150,000.00	$150,000.00
3.5	Electrical / Instrumentation	1	LS	$401,000.00	$401,000.00	$916,140.00	$916,140.00	$850,000.00	$850,000.00
3.6	Generator Diesel Particulate Filter Retrofit	1	LS	$51,000.00	$51,000.00	$77,937.75	$77,937.75	$100,000.00	$100,000.00
3.7	Best Management Practices	1	LS	$19,000.00	$19,000.00	$15,000.00	$15,000.00	$35,000.00	$35,000.00
3.8	Unforeseen Work Not Covered Within All Other Bid Items	1	LS	$205,000.00	$205,000.00	$205,000.00	$205,000.00	$205,000.00	$205,000.00
	Last Minute Additions/Deductions				$0.00		$0.00		$0.00
	Total Additive Bid "A"				**$1,334,000.00**		**$2,295,447.22**		**$1,905,000.00**
	Total Base Bid Plus Additive Bid "A" Plus Additive Bid "B"				**$2,699,000.00**		**$4,161,728.57**		**$3,725,000.00**
Additive Bid "C"									
4.1	Mobilization / Demobilization (Maximum 5% of total bid price)	1	LS	$20,000.00	$20,000.00	$46,203.30	$46,203.30	$45,000.00	$45,000.00
4.2	Demolition	1	LS	$98,000.00	$98,000.00	$18,000.00	$6.00	$80,000.00	$80,000.00
4.3	Civil / Structural	1	LS	$141,000.00	$141,000.00	$135,424.00	$135,424.00	$290,000.00	$290,000.00
4.4	Electrical / Instrumentation	1	LS	$301,000.00	$301,000.00	$795,354.00	$795,354.00	$450,000.00	$450,000.00
4.5	Generator Diesel Particulate Filter Retrofit	1	LS	$100,000.00	$100,000.00	$145,483.80	$145,483.80	$175,000.00	$175,000.00
4.6	Best Management Practices	1	LS	$13,000.00	$13,000.00	$15,000.00	$15,000.00	$35,000.00	$35,000.00
4.7	Unforeseen Work Not Covered Within All Other Bid Items	1	LS	$105,000.00	$105,000.00	$105,000.00	$105,000.00	$105,000.00	$105,000.00
	Last Minute Additions/Deductions				$0.00		$0.00		$0.00
	Total Additive Bid "C"				**$778,000.00**		**$1,242,471.10**		**$1,180,000.00**
	Total Base Bid Plus Additive Bid "A" Plus Additive Bid "B" Plus Additive Bid "C"				**$3,477,000.00**		**$5,404,199.67**		**$4,905,000.00**

License Status	Active	Active	Active
Sub's License Status	Active	Active	Active
Bid Bond Company	MERCHANTS BONDING COMPANY (MUTUAL)	UNITED STATES FIRE INSURANCE COMPANY	OLD REPUBLIC SURETY COMPANY
Submitted Entire Bid Package	Yes	No	Yes
Submitted Sub's Qualification Statement	Yes	Yes	Yes
DIR Status	Active	Active	Active
Error in Bid	No	No	No

CITY OF REDLANDS
MUNICIPAL UTILITIES & ENGINEERING DEPARTMENT
BID ANALYSIS

PROJECT NO. 501028
Water Facilities Generators

BID DATE: 17-Dec-2025
EST. START DATE: 12-Jan-2026

Item No.	Bid Item	Quantity	Unit	Roadway Engineering & Construction Corp.					
				Unit Price	Item Price				
1.1	Mobilization / Demobilization (Maximum 5% of total bid price)	1	LS	$34,200.00	$34,200.00				
1.2	Demolition	1	LS	$10,000.00	$10,000.00				
1.3	Civil / Structural	1	LS	$100,000.00	$100,000.00				
1.4	Electrical / Instrumentation	1	LS	$470,000.00	$470,000.00				
1.5	Generator Diesel Particulate Filter Retrofit	1	LS	$35,000.00	$35,000.00				
1.6	Landscape	1	LS	$30,000.00	$30,000.00				
1.7	Best Management Practices	1	LS	$5,000.00	$5,000.00				
1.8	Unforeseen Work Not Covered Within All Other Bid Items	1	LS	$75,000.00	$75,000.00				
	Last Minute Additions/Deductions				$0.00				
	Total Base Bid				**$759,200.00**				
Additive Bid "A"									
2.1	Mobilization / Demobilization (Maximum 5% of total bid price)	1	LS	$25,000.00	$25,000.00				
2.2	Demolition	1	LS	$20,000.00	$20,000.00				
2.3	Civil / Structural	1	LS	$80,000.00	$80,000.00				
2.4	Electrical / Instrumentation	1	LS	$550,000.00	$550,000.00				
2.5	Generator Diesel Particulate Filter Retrofit	1	LS	$35,000.00	$35,000.00				
2.6	Best Management Practices	1	LS	$5,000.00	$5,000.00				
2.7	Unforeseen Work Not Covered Within All Other Bid Items	1	LS	$75,000.00	$75,000.00				
	Last Minute Additions/Deductions				$0.00				
	Total Additive Bid "A"				**$790,000.00**				
	Total Base Bid Plus Additive Bid "A"				**$1,549,200.00**				
Additive Bid "B"									
3.1	Mobilization / Demobilization (Maximum 5% of total bid price)	1	LS	$34,200.00	$34,200.00				
3.2	Demolition	1	LS	$45,000.00	$45,000.00				
3.3	Civil / Structural	1	LS	$200,000.00	$200,000.00				
3.4	Building Retrofit	1	LS	$100,000.00	$100,000.00				
3.5	Electrical / Instrumentation	1	LS	$940,000.00	$940,000.00				
3.6	Generator Diesel Particulate Filter Retrofit	1	LS	$35,000.00	$35,000.00				
3.7	Best Management Practices	1	LS	$5,000.00	$5,000.00				
3.8	Unforeseen Work Not Covered Within All Other Bid Items	1	LS	$205,000.00	$205,000.00				
	Last Minute Additions/Deductions				$0.00				
	Total Additive Bid "A"				**$1,564,200.00**				
	Total Base Bid Plus Additive Bid "A" Plus Additive Bid "B"				**$3,113,400.00**				
Additive Bid "C"									
4.1	Mobilization / Demobilization (Maximum 5% of total bid price)	1	LS	$25,000.00	$25,000.00				
4.2	Demolition	1	LS	$20,000.00	$20,000.00				
4.3	Civil / Structural	1	LS	$100,000.00	$100,000.00				
4.4	Electrical / Instrumentation	1	LS	$550,000.00	$550,000.00				
4.5	Generator Diesel Particulate Filter Retrofit	1	LS	$70,000.00	$70,000.00				
4.6	Best Management Practices	1	LS	$5,000.00	$5,000.00				
4.7	Unforeseen Work Not Covered Within All Other Bid Items	1	LS	$105,000.00	$105,000.00				
	Last Minute Additions/Deductions				$0.00				
	Total Additive Bid "C"				**$875,000.00**				
	Total Base Bid Plus Additive Bid "A" Plus Additive Bid "B" Plus Additive Bid "C"				**$3,988,400.00**				

License Status	Active		
Sub's License Status	Active		
Bid Bond Company	NATIONWIDE MUTUAL INSURANCE COMPANY		
Submitted Entire Bid Package	Yes		
Submitted Sub's Qualification Statement	Yes		
DIR Status	Active		
Error in Bid	No		

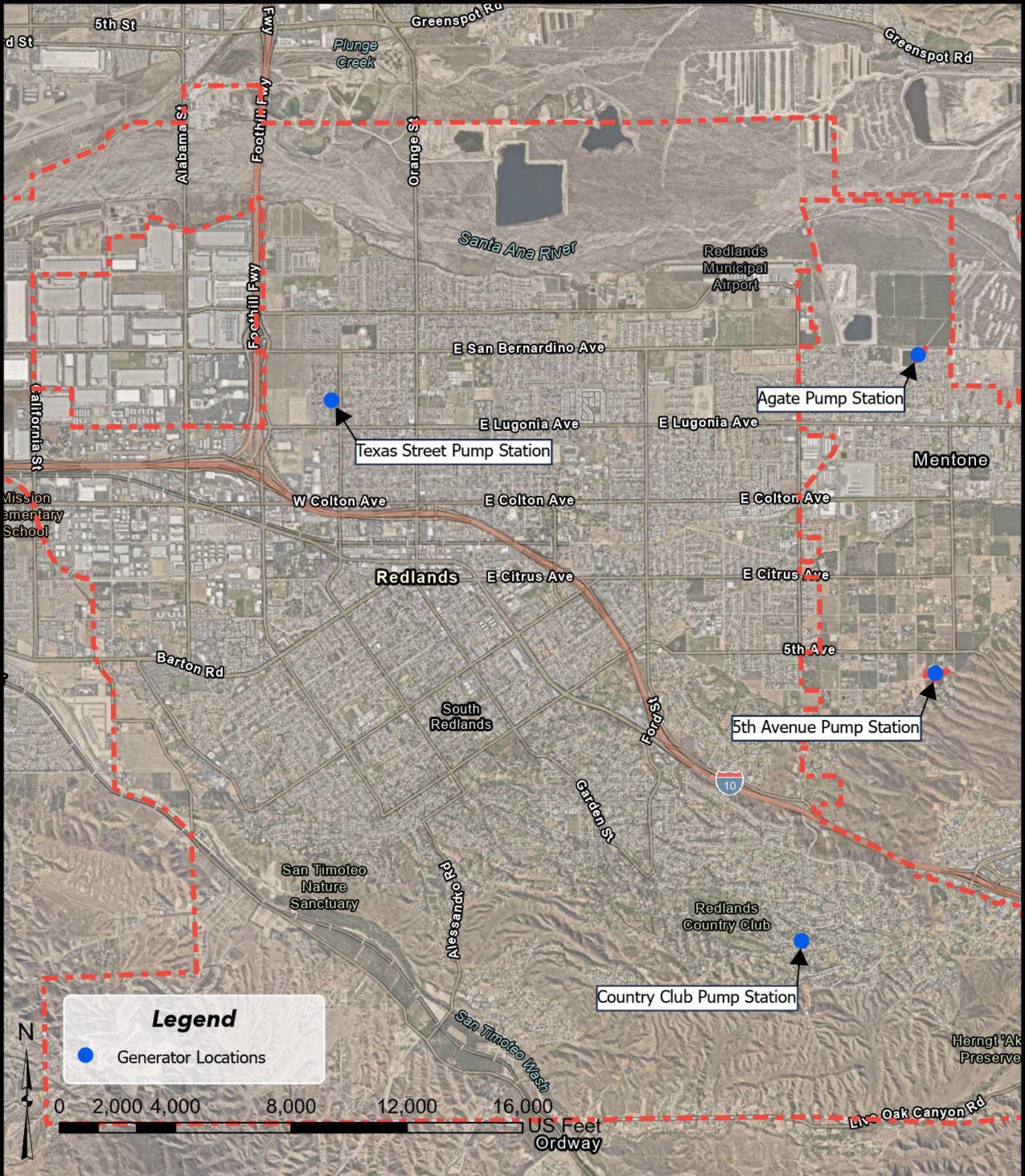

City of Redlands

Water Facilities Generator Project

Proposed Locations

CONSTRUCTION PLANS FOR
CITY OF REDLANDS
WATER FACILITIES GENERATORS

PROJECT No. 501028

BID SET
AUGUST 2025

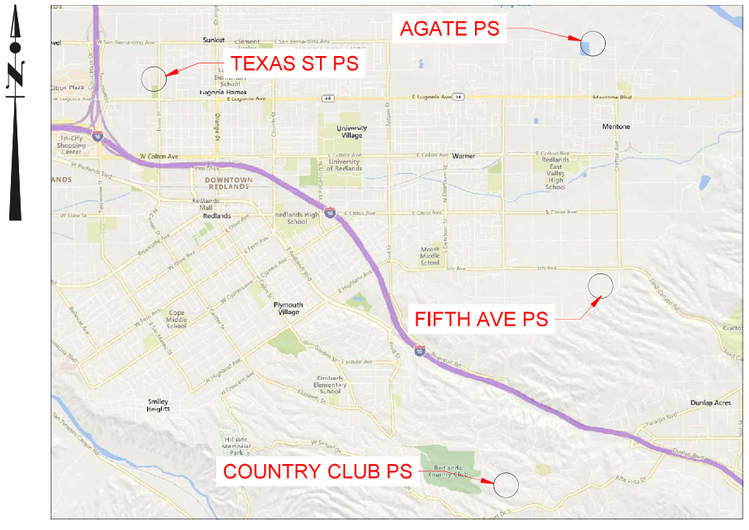

VICINITY MAP
SCALE : NONE

CITY COUNCIL:

EDDIE TEJEDA, MAYOR
PAUL T. BARICH, MAYOR PRO TEM
DENISE DAVIS, COUNCIL MEMBER
JENNA GUZMAN-LOWERY, COUNCIL MEMBER
MARIO SAUCEDO, COUNCIL MEMBER

CITY CLERK:

JEANNE DONALDSON, CITY CLERK

CITY STAFF:

CHARLES M. DUGGAN JR., CITY MANAGER

SHEET INDEX

DRAWING NUMBER	SHEET TITLE	SHEET NUMBER
	GENERAL	
G-1	TITLE AND INDEX SHEET	01
G-2	ABBREVIATIONS, LEGEND AND SYMBOLS	02
G-3	GENERAL NOTES AND DETAILS	03
	GENERAL STRUCTURAL	
GS-1	STRUCTURAL NOTES AND ABBREVIATIONS	04
GS-2	STRUCTURAL NOTES AND ABBREVIATIONS	05
GS-3	GENERAL STRUCTURAL DETAILS	06
GS-4	CMU WALL SECTION AND DETAILS	07
	GENERAL ELECTRICAL	
GE-1	ELECTRICAL ABBREVIATIONS, LEGEND AND SYMBOLS	08
GE-2	ELECTRICAL GENERAL NOTES	09
GE-3	ELECTRICAL DETAILS	10
	AGATE PUMP STATION (AG)	
AG-D-1	SITE DEMO PLAN AND DETAILS	11
AG-C-1	EXISTING CONDITIONS SURVEY	12
AG-C-2	OVERALL SITE PLAN	13
AG-E-1	AGATE ELECTRICAL SITE PLAN	14
AG-E-2	AGATE SINGLE LINE DIAGRAM AND SCHEDULES	15
	COUNTRY CLUB PUMP STATION (CC)	
CC-D-1	SITE DEMO PLAN AND DETAILS	16
CC-C-1	EXISTING CONDITIONS SURVEY	17
CC-C-2	OVERALL SITE PLAN	18
CC-E-1	COUNTRY CLUB ELECTRICAL SITE PLAN	19
CC-E-2	COUNTRY CLUB SINGLE LINE DIAGRAM AND SCHEDULES	20
CC-L-1	LANDSCAPE PLAN	21
	FIFTH AVENUE PUMP STATION (FA)	
FA-D-1	SITE DEMO PLAN	22
FA-D-2	DEMO DETAILS	23
FA-C-1	EXISTING CONDITIONS SURVEY	24
FA-C-2	OVERALL SITE PLAN	25
FA-C-3	GRADING AND DRAINAGE PLAN	26
FA-C-4	PAVING PLAN	27
FA-C-5	SITE DETAILS	28
FA-S-1	PUMP STATION - EXISTING CONDITION	29
FA-S-2	PUMP STATION - PROPOSED REPAIRS	30
FA-E-1	FIFTH AVE ELECTRICAL SITE PLAN	31
FA-E-2	FIFTH AVE SINGLE LINE DIAGRAM AND SCHEDULES	32
FA-E-3	BOOSTER PUMP SCHEMATIC DIAGRAM	33
	TEXAS STREET PUMP STATION (TS)	
TS-D-1	SITE DEMO PLAN AND DETAILS	34
TS-C-1	EXISTING CONDITION SURVEY	35
TS-C-2	OVERALL SITE PLAN	36
TS-E-1	TEXAS ST ELECTRICAL SITE PLAN	37
TS-E-2	TEXAS ST SINGLE LINE DIAGRAM AND SCHEDULES	38

LINE IS 2 INCHES AT FULL SIZE
IF NOT 2" – SCALE ACCORDINGLY

BRADY
Water • Power • Transportation
10089 Willow Creek Rd., Suite 375
San Diego, California 92131
P: 858.496.0500 - www.richardbrady.com

REGISTERED PROFESSIONAL ENGINEER GARRETT D. MURAWSKY C 90365 CIVIL STATE OF CALIFORNIA
08/28/2025

Letter	Description	Date	Initial	Initial
	Revisions			Approved by:

CITY OF REDLANDS
Municipal Utilities and Engineering Department

WATER FACILITIES GENERATORS
PROJECT No. 501028

TITLE AND INDEX SHEET

G-1

D-10117

Designed by:	GDM
Date:	08/28/2025
Checked by:	KCK
Date:	08/28/2025
Drawn by:	GDM
Date:	08/28/2025
Checked by:	KCK
Date:	08/28/2025

Reviewed By:
Gerard J. Nepomuceno, Civil Engineer, R.C.E. 93200 Date
Approved By:
Goutam K. Dobey, City Engineer, R.C.E. 75646 Date

Sheet 01 of 38 Sheets
Scale: Horiz. AS SHOWN
Vert. NONE

P:\WHB_South\REDLND\REDLND.006_Engineering and Design of Water Facilities Generators (No. 20230112WW)\4_EngDesign\2_Dwgs\1-Gen\G-1_TitleSheet.dwg | Plotted: 8/28/2025

A	
A	AIR
AB	ANCHOR BOLT
ABBR	ABBREVIATION
ABS	ABSOLUTE TEMPERATURE, ACRYLONITRILE BUTADIENE STYRENE
AD	AREA DRAIN
AC	ACTIVATED CARBON
A/C	AIR CONDITIONING
ACP	ASPHALTIC CONCRETE PAVEMENT OR ASBESTOS CEMENT PIPE
ADJ	ADJUSTABLE
AER	AERATION
AL	ALUMINUM
AMB	AMBIENT
ANSI	AMERICAN NATIONAL STANDARDS INSTITUTE (FORMERLY A,S,A,)
API	AMERICAN PETROLEUM INSTITUTE
APPD	APPROVED
APPROX	APPROXIMATE
ARCH	ARCHITECTURAL
ARHM	ASPHALT RUBBER HOT MIX
ASA	AMERICAN STANDARDS ASSOCIATION (NOW ANSI)
ASME	AMERICAN SOCIETY OF MECHANICAL ENGINEERS
ASTM	AMERICAN SOCIETY FOR TESTING AND MATERIAL
ASSY	ASSEMBLY
AT	ACOUSTICAL TILE
ATM	ATMOSPHERE
AUX	AUXILIARY
AVAR	AIR VACUUM AND AIR RELEASE VALVE
AVG	AVERAGE
AWWA	AMERICAN WATER WORKS ASSOCIATION
B	
BAV	BALL VALVE
BC	BOLT CIRCLE OR BETWEEN CENTERS
BD	BOARD
BDD	BACKDRAFT DAMPER
BE	BEVELED END
BF	BLIND FLANGE OR BOTTOM FLAT
BFP	BACK FLOW PREVENTER
B'FLY	BUTTERFLY VALVE
BFV	BUTTERFLY VALVE
BJ	BUTT JOINT
BLDG	BUILDING
BLK	BLACK OR BLOCK
BO	BLOW-OFF ASSEMBLY
BOC	BOTTOM OF CONCRETE
BOD	BIOCHEMICAL OXYGEN DEMAND OR BOTTOM OF DUCT
BP	BEGIN PIPE
BOP	BOTTOM OF PIPE
BPV	BACK PRESSURE VALVE
BRK	BRICK
BS	BIRD SCREEN
BSHG	BUSHING
B&S	BELL AND SPIGOT
BSMT	BASEMENT
BT	BOLT
BTM	BOTTOM
BTU	BRITTISH THERMAL UNIT
BUV	BUTTERFLY VALVE
BVP	BEGIN VERTICAL POINT
BW	BUTTWELD
C	
C	CENTIGRADE OR CHANNEL
CAB	CABINET
CAP	CAPACITY
CB	CATCH BASIN
CC	CENTER TO CENTER
CCW	COUNTER CLOCKWISE
CD	CEILING DIFFUSER, CONDENSATE DRAIN
CEM	CEMENT
CER	CERAMIC
CFH	CUBIC FEET PER HOUR
CFM	CUBIC FEET PER MINUTE
CFS	CUBIC FEET PER SECOND
CHEM	CHEMICAL
CHG	CHANGE
CI	CAST IRON
CJ	CONSTRUCTION JOINT
CKV	CHECK VALVE
CL	CHLORINE GAS, CHLORINATOR, CHAIN LINK
℄	CENTER LINE
CLG	CEILING
CLR	CLEAR, CLEARANCE
CM	CENTIMETER
CML	CEMENT MORTAR-LINED
CML&C	CEMENT MORTAR-LINED AND COATED
CML&EC	CEMENT MORTAR-LINED AND EPOXY COATED
CO	CLEANOUT, CHANGE ORDER
COL	COLUMN
COMB	COMBINATION
COMP	COMPRESSOR
CON	CONCENTRIC
CONC	CONCRETE
CONSTR	CONSTRUCTION OR CONSTRUCT
CONT	CONTINUED OR CONTINUOUS
CONTR	CONTRACTOR
CORP	CORPORATION
COTG	CLEAN-OUT TO GRADE
CP	CONTROL PANEL OR CHECKERED PLATE
CPLG	COUPLING
CPVC	CHLORINATED POLYVINYL CHLORIDE
CS	CAUSTIC SODA OR CARBON STEEL
CT	CERAMIC TILE
CTC	CENTER TO CENTER
CTSK	COUNTERSUNK
CTR	CENTER
CU	COPPER OR CUBIC
CYL	CYLINDER
CW	COLD WATER, COOLED WATER OR CLOCKWISE
CWO	CHAIN WHEEL OPERATED
D	
D	DOUBLE
DB	DUCT BANK
DC	DOUBLE CONTAINMENT, DIRECT CURRENT
DET	DETAIL
DEMO	DEMOLITION, DEMOLISH
DF	DRINKING FOUNTAIN OR DOUGLAS FIR
DFU	DRAIN FIXTURE UNIT(S)
DG	DOOR GRILLE
DI	DUCTILE IRON
DIA	DIAMETER
DIAG	DIAGONAL
DIAPH	DIAPHRAGM
DIFF	DIFFUSER OR DIFFERENTIAL
DISCH	DISCHARGE
DISP	DISPENSER
DL	DOOR LOUVER
DN	DOWN OR DECANT
DP	DRIP PIT
DR	DOOR OR DRAIN
DSD	DUCT-SMOKE DETECTOR
DWG	DRAWING
DTR	DOWN THROUGH ROOF
E	
E	EAST, EASTING
EA	EACH
EAD	EXHAUST AIR DUCT
EAG	EXHAUST AIR GRILLE
EAR	EXHAUST AIR REGISTER
EC	EPOXY COATED
ECAB	ELECTRICAL CABINET
ECC	ECCENTRIC
ECS	EFFLUENT CONTROL STRUCTURE
EF	EXHAUST FAN
EL	ELEVATION OR ELBOW
ELL	ELBOW
ELEC	ELECTRICAL OR ELECTRONIC
ELECT	ELECTRICAL OR ELECTRONIC
ENG	ENGINE
ENCL	ENCLOSURE
ENT	ENTRANCE
EOR	ENGINEER OF RECORD
EP	END PIPE, END POINT
EQ	EQUAL
EQUIP	EQUIPMENT
ER	EXHAUST REGISTER
ESMT	EASEMENT
EVAP	EVAPORATOR
EW	EACH WAY
EWH	ELECTRIC WATER HEATER
EXH	EXHAUST
EX	EXISTING
EXIST	EXISTING
EXT	EXTERNAL, EXTERIOR OR EXTENSION
EXTR	EXTRUDED
F	
F	FAHRENHEIT OR FINISH
FABR	FABRICATION, FABRICATE OR FABRICATED
FACP	FIRE ALARM CONTROL PANEL
FAF	FOUL AIR FAN
FAI	FRESH AIR INTAKE
FB	FLAT BAR, FLOOR BEAM, FIELD BOOK OR FLAT BOTTOM
FCO	FLOOR CLEANOUT
FD	FLOOR DRAIN, FIRE DAMPER
FDR	FEEDER
FE	FIRE EXTINGUISHER, FLOW ELEMENT
FF	FINISHED FLOOR, FLAT FACE OR FAR FACE
FG	FINISHED GRADE
FH	FIRE HYDRANT
FHMB	FLAT HEAD MACHINE BOLT
FI	FLOW INDICATOR
FIG	FIGURE
FIN	FINISHED
FIT	FLOW INDICATOR TRANSMITTER
FIX	FIXTURE
FLA	FULL LOAD AMPERE
FLEX	FLEXIBLE
FLOCC	FLOCCULATOR OR FLOCCULATION
FLG	FLANGE
FLGD	FLANGED
FLR	FLOOR
FM	FACTORY MANUAL (LAB APPROVED)
FMH	FLEXIBLE METAL HOSE
FND	FOUNDATION
FNL	FUNNEL
FNPT	FEMALE NATIONAL PIPE THREAD
FOB	FLAT ON BOTTOM
FOF	FACE OF FLANGE
FOT	FLAT ON TOP
FPC	FLEXIBLE PIPE COUPLING
FPM	FEET PER MINUTE
FPS	FEET PER SECOND
FR	FIELD ROUTE
FRP	FIBERGLASS REINFORCED PLASTIC
FS	FAR SIDE, FLOOR SINK, FINISHED SURFACE, FORGED STEEL, FIELD SUPPORT
FT	FEET OR FOOT
FTF	FITTING TO FITTING OR FACE TO FACE
FTG	FOOTING OR FITTING
FT, LB	FOOT-POUND
FU	FIXTURE UNIT(S)
FUT	FUTURE
FV	FIELD VERIFY
FW	FIELD WELD
G	
GA	GAGE OR GAUGE
GAL	GALLON
GALV	GALVANIZED
GEN	GENERAL OR GENERATOR
GFA	GROOVED FLANGE ADAPTER
GI	GALVANIZED IRON
GLV	GLOBE VALVE
GPD	GALLONS PER DAY
GPH	GALLONS PER HOUR
GPM	GALLONS PER MINUTE
GRD	GRADE OR GROUND
GRTG	GRATING
GS	GALVANIZED STEEL
GTV	GATE VALVE
GV	GATE VALVE
GYP	GYPSUM
H	
HB	HOSE BIB
HC	HEAT CONSERVATION
HD	HUB DRAIN
HDG	HOT DIPPED GALVANIZED
HDP	HIGH DENSITY POLYETHYLENE
HDPE	HIGH DENSITY POLYETHYLENE
HDR	HEADER
HDW	HARDWARE
HEX	HEXAGONAL
Hg	MERCURY
HGR	HANGER
HORIZ	HORIZONTAL
HP	HORSEPOWER, HIGH POINT OR HIGH PRESSURE
HR	HEATING RETURN OR HOUR
HSS	HARDENED STAINLESS STEEL
HT	HYDRAULIC TUBING OR HEAT TRACING
HTG	HEATING
HTR	HEATER
H&V	HEATING AND VENTILATING
HVAC	HEATING, VENTILATING AND AIR CONDITIONING
HW	HOT WATER
HWL	HIGH WATER LEVEL
HWO	HANDWHEEL OPERATED
HYD	HYDRAULIC OR HYDRANT
I	
ID	INSIDE DIAMETER
IE	INVERT ELEVATION
IF	INSIDE FACE
IN	INCH
INCL	INCLUDED
INFL	INFLUENT
IN, LB	INCH-POUND
INS	INSULATION OR INSULATED
INSTR	INSTRUMENT
INT	INTERIOR
INV	INVERT ELEVATION
IP	IRON PIPE
IPS	IRON PIPE SIZE
IRRG	IRRIGATION
J	
JAN	JANITOR
JT	JOINT
L	
L	LITER, LENGTH
LAB	LABORATORY
LAM	LAMINATED
LAV	LAVATORY
LB	POUND
LCP	LOCAL CONTROL PANEL
LE	LEVEL ELEMENT
LG	LENGTH, LONG, LEVEL GAGE
LIT	LEVEL INDICATING TRANSMITTER
LP	LOW POINT, LOCAL PANEL OR LOW PRESSURE
LPG	LIQUID PROPANE GAS
LR	LONG RADIUS
LT	LEFT OR LIGHT
LWL	LOW WATER LEVEL
M	
M	METER
MAG	MAGNETIC
MAN	MANUAL
MAX	MAXIMUM
MCC	MOTOR CONTROL CENTER
MD	MOTORIZED DAMPER
MECH	MECHANICAL
MED	MEDIUM
MEMB	MEMBRANE
MF	MICROFILTER OR MICROFILTRATION
MFR	MANUFACTURER
MFR'D	MANUFACTURED
MGD	MILLION GALLONS PER DAY
MH	MAINTENANCE HOLE, MANHOLE
MI	MALLEABLE IRON
MIL	MILITARY OR 1/1,000 INCH
MIN	MINIMUM OR MINUTE
MISC	MISCELLANEOUS
MNPT	MALE NATIONAL PIPE THREAD
MO	MOTOR OPERATED OR MASONRY OPENING
MOD	MODEL
MOV	MOTOR OPERATED VALVE
MS	MOP SINK
MTC	MECHANICAL-TYPE COUPLING
MTD	MOUNTED
MTG	MOUNTING
MTL	MATERIAL OR METAL
MTR	MOTOR
MVD	MANUAL VOLUME DAMPER
N	
N	NORTH, NORTHING
NBS	NATIONAL BUREAU OF STANDARDS
NC	NORMALLY CLOSED
NEC	NATIONAL ELECTRIC CODE
NEMA	NATIONAL ELECTRICAL MANUFACTURERS ASSOCIATION
NFPA	NATIONAL FIRE PROTECTION ASSOCIATION
NF	NEAR FACE
NG	NATURAL GRADE
NGS	NATIONAL GEODETIC SURVEY
NIC	NOT IN CONTRACT
NO	NUMBER OR NORMALLY OPEN
NOM	NOMINAL
NPS	NOMINAL PIPE SIZE (FORMERLY I.P.S)
NPT	NATIONAL PIPE THREAD
NRS	NON-RISING STEM
NS	NEAR SIDE
NTS	NOT TO SCALE
O	
OBD	OPPOSED BLADE DAMPER
OC	OVER-CROSSING OR ON CENTER
OCFCD	ORANGE COUNTY FLOOD CONTROL DISTRICT
OD	OUTSIDE DIAMETER, OVERALL DIMENSION OR OVERFLOW DRAIN
OF	OVERFLOW OR OUTSIDE FACE
OH	OVERHEAD
OPNG	OPENING
OPP	OPPOSITE
OS & Y	OUTSIDE SCREW AND YOKE
OWG	OIL, WATER, GAS
OZ	OUNCE
P	
PAVMT	PAVEMENT
PC	POINT OF CURVE
PCC	POINT OF COMPOUND CURVE
PDI	PRESSURE DIFFERENTIAL INDICATOR
PD	PROCESS DRAIN
PDIT	PRESSURE DIFFERENTIAL INDICATOR TRANSMITTER
PE	PLANT EFFLUENT, PIPE END OR PLAIN END
PG	PAGE OR PRESSURE GAGE
pH	HYDROGEN ION CONCENTRATION
PI	POINT OF INTERSECTION
PID	PERMANENT IDENTIFIER
PL, ℄	PLATE
PLCS	PLACES
PLT	PLANT
PLV	PLUG VALVE
PNEU	PNEUMATIC
PNL	PANEL
POC	POINT OF CONNECT
PP	POWER PANEL, PERSONNEL PROTECTION
PPD	POUNDS PER DAY
PPG	PIPE OR PIPING
PPH	POUNDS PER HOUR
PPM	PARTS PER MILLION
PR	PAIR
PRC	POINT OF REVERSE CURVE
PRCC	POINT OF REVERSE COMPOUND CURVE
PREFAB	PREFABRICATED
PRESS	PRESSURE
PRV	PRESSURE REGULATING, RELIEF OR REDUCING VALVE
PS	PRESSURE SWITCH, PIPE SUPPORT
PSF	POUNDS PER SQUARE FOOT
PSI	POUNDS PER SQUARE INCH
PSIA	POUNDS PER SQUARE INCH ABSOLUTE
PSIG	POUNDS PER SQUARE INCH GAUGE
PT	POINT OF TANGENT
PTFE	POLYTETRAFLUOROETHYLENE (TEFLON®)
PVC	POLYVINYL CHLORIDE
PVI	POINT VERTICAL INTERSECTION
Q	
QTY	QUANTITY
R	
R	RADIUS, RISER, RETURN OR RATE OF SLOPE
RAD	RETURN AIR DUCT
RAG	RETURN AIR GRILL
RC	REINFORCED CONCRETE
RCP	REINFORCED CONCRETE PIPE
RCR	ROOF CONDENSATE RECEIVER
RD	ROOF DRAIN, ROUND, OR ROAD
RDWD	REDWOOD
RECIRC	RECIRCULATE, RECIRCULATING, RECIRCULATED
RED	REDUCER OR REDUCING
REF	REFERENCE OR REFER
REG	REGULATING
REIN	REINFORCE OR REINFORCED
RE-ST	REINFORCING STEEL
REQD	REQUIRED
REQ'D	REQUIRED
RES	RESERVOIR
RESIL	RESILIENT
REV	REVISION
RFG	ROOFING
RF	ROOF OR RAISED FACE
RM	ROOM
RO	REVERSE OSMOSIS, ROUGH OPENING
RPM	REVOLUTIONS PER MINUTE OR REINFORCED PLASTIC MORTAR
RR	RAILROAD
RT	RIGHT
RTP	REINFORCED THERMOSETTING PLASTIC
RW	RESILIENT WEDGE
R/W	RIGHT OF WAY
RWL	RAINWATER LEADER
S	
S	SOUTH, SCUM, SINK, SECOND OR SLOPE
SA	SAMPLE
SAD	SUPPLY AIR DUCT
SAN	SANITARY
SAR	SUPPLY AIR REGISTER
SAW CO	SAN ANTONIO WATER COMPANY
SC	SAMPLE CONNECTION
SCRD	SCREWED
SCFM	STANDARD CUBIC FEET PER MINUTE
SCH	SCHEDULE
SD	SMOKE DETECTOR, STORM DRAIN
SDR	STORM DRAIN
SEC	SECONDARY
SECT	SECTION
SER	SERIES
SF	SUPPLY FAN
SGL	SINGLE
SH	SHOWER, STEM HORIZONTAL
SIM	SIMILAR
SLDG	SLIDING
SLV	SLEEVE-TYPE COUPLING
SMLS	SEAMLESS
SO	SLIP-ON, SHUT OFF
SLN	SOLUTION
SP	STATIC PRESSURE
SPECS	SPECIFICATIONS
SPECD	SPECIFIED
SPL	SPECIAL
SPPWC	STANDARD PLANS FOR PUBLIC WORKS CONSTRUCTION
SQ	SQUARE
SR	SHORT RADIUS
SS	SANITARY SEWER, STAINLESS STEEL OR SERVICE SINK
SSEW	SAFETY SHOWER OR EYE WASH
SSPWC	STANDARD SPECIFICATIONS FOR PUBLIC WORKS CONSTRUCTION
SST	STAINLESS STEEL
STA	STATION
STD	STANDARD
STL	STEEL
STLS	STAINLESS
STM	STEAM
STRUCT	STRUCTURAL OR STRUCTURE
SUCT	SUCTION
SV	SOLENOID VALVE, STEM VERTICAL
SW	SOCKET WELD, SOLVENT WELD
SWR	SIDEWALL REGISTER
SYM	SYMMETRICAL OR SYMBOL
SYS	SYSTEM
T	
T	THERMOSTAT, TANGENT OR TOP
T&B	TOP AND BOTTOM
TBE	THREAD BOTH ENDS
TEMP	TEMPERATURE OR TEMPORARY
T&G	TONGUE AND GROOVE
THK	THICK OR THICKNESS
THRD	THREADED
TK	TANK
TOC	TOP OF CONCRETE
TOE	THREAD ONE END
TOL	TOILET
TOP	TOP OF PIPE
TOS	TOP OF STEEL
TOW	TOP OF WALL
TP	TRAP PRIMER
TRANS	TRANSITION OR TRANSMITTER
TS	TUBE STEEL, TEMPERATURE SENSOR
TV	THERMOSTATIC VALVE OR TELEVISION
TW	THERMOMETER WELL
TWO	TASK WORK ORDER
TYP	TYPICAL
U	
UB	UNION BONNET
UG	UNDERGROUND
UGC	UNDERGROUND CONDUIT
UH	UNIT HEATER
UL	UNDERWRITERS LABORATORIES
UON	UNLESS OTHERWISE NOTED
UR	URINAL
US	UTILITY STATION
UTR	UP THROUGH ROOF
V	
V	VENT, VERTICAL, VOLT OR VOLUME
VAR	VARIES OR VARIABLE
VCP	VITRIFIED CLAY PIPE
VERT	VERTICAL
VFD	VARIABLE FREQUENCY DRIVE
VLV	VALVE
VOL	VOLUME
VTC	VENT TO CEILING
VTR	VENT THROUGH ROOF
VVT	VARIABLE VOLUME AND TEMPERATURE
W	
W	WEST, WASTE
W/	WITH
WC	WATER COLUMN OR WATER CLOSET
WCO	WALL CLEANOUT
WD	WOOD
WF	WIDE FLANGE
WFA	WATER FACILITIES AUTHORITY
WH	WATER HEATER
WHA	WATER HAMMER ARRESTER
WI	WROUGHT IRON
WN	WELD NECK
W/O	WITHOUT
WOG	WATER, OIL OR GAS WORKING PRESSURE
WP	WATER PROOFING, WORK POINT
WS	WATER SURFACE
WSTP	WATER STOP
WT	WEIGHT
WWF	WELDED WIRE FABRIC
WWM	WELDED WIRE MESH
X	
X	BY
XJ	EXPANSION JOINT
XS	EXTRA STRONG
XXS	DOUBLE EXTRA STRONG
Y	
YD	YARD
YR	YEAR
Z	
ZN	ZINC
SERVICE DESIGNATIONS	
AA	AERATION AIR
AMM	AMMONIA (NH_2OH)
AOP	ADVANCED OXIDATION PROCESSES
BO	BLOW-OFF
BR	BRINE
BW	BACKWASH
CA	CITRIC ACID
CAI	CONTROL AIR INLET
CD	CONDENSATE DRAIN
CG	CLEAN GAS
CHL	CHLORAMINES (NH_2Cl)
CIPR	CLEAN-IN-PLACE RETURN
CIPS	CLEAN-IN-PLACE SUPPLY (IN & DRAIN)
CN	CENTRATE
COND	CONDENSATE
CSR	CIP SOLUTION RETURN (SPENT)
CSS	CIP SOLUTION SUPPLY
CWR	COOLING WATER RETURN
CWS	COOLING WATER SUPPLY
DET	DETERGENT (MEMCLEAN C)
DG	DIGESTED GAS
DPL	DILUTE POLYMER
DRN	DRAIN
DS	DIGESTED SLUDGE
DW	DEMINERALIZED WATER
EV	EQUIPMENT VENT
FA	FOUL AIR
FCL_2	FERROUS CHLORIDE
FCL_3	FERRIC CHLORIDE
FEWD	FILTRATE EXHAUST WASTE DISCHARGE
FPW	FIRE PROTECTION WATER
FTW	FLUSH TO WASTE
FW	FRESH WATER (POTABLE)
FWS	FLUSH WATER SUPPLY
HCA	HYDROCHLORIC ACID (HCl)
HGD	HOT GAS DISCHARGE
HO	HYDRAULIC OIL
HPC	HIGH PRESSURE CONDENSATE
HPE	HIGH PRESSURE EFFLUENT
IA	INSTRUMENT AIR
IW	INDUSTRIAL WATER
LO	LUBE OIL
LPA	LOW PRESSURE AIR
LPC	LOW PRESSURE CONDENSATE
LPE	LOW PRESSURE EFFLUENT
LR	LIQUID RETURN
MFF	MF FILTRATE
MH	MAGNESIUM HYDROXIDE
ML	MIXED LIQUOR
MPC	MEDIUM PRESSURE CONDENSATE
NG	NATURAL GAS
N_2	NITROGEN
NPL	NEAT POLYMER
NSW	NON-SPEC WATER
PA	PLANT AIR
PD	PROCESS DRAIN
PE	PRIMARY EFFLUENT
PO_4	PHOSPHATE
PRA	PROCESS AIR
PS	PRIMARY SLUDGE
PW	PRODUCT WATER
RAS	RETURN ACTIVATED SLUDGE
ROB	RO BRINE
ROP	RO PERMEATE
SA	SULFURIC ACID (H_2SO_4)
SB	SODIUM BISULFATE ($NaHSO_3$)
SCS	SULFUR CAKE / SLURRY
SE	SECONDARY EFFLUENT
SG	SOUR GAS
SHC	SODIUM HYPOCHLORITE (NaOCl)
SHO	SODIUM HYDROXIDE (NaOH)
SI	SCALE INHIBITOR
SLU	$Ca(OH)_2$ SLURRY
SO_3	SULFITE
SW	SOFTENED WATER
TE	TERTIARY EFFLUENT
TW	TREATED WATER
TWAS	THICKENED WASTE ACTIVATED SLUDGE
UW	UNTREATED WATER
V	VENT
VFWD	VENT FEED WASTE DISCHARGE
VAC	VACUUM
WAS	WASTE ACTIVATED SLUDGE
WSC	WET SLUDGE CAKE

LEGEND

SYMBOL	FEATURE
	EXISTING TREE OR BUSH
	EXISTING STRUCTURES
	EXISTING PAVEMENT OR CONCRETE
	PROPOSED PAVEMENT OR CONCRETE
	PROPOSED GRAVEL
	EXISTING TO BE REMOVED
20	EXISTING GRADES
20	PROPOSED GRADES
	PROPERTY LINE
	EASEMENT
E	EXISTING ELECTRICAL LINE
FO	EXISTING FIBER OPTIC LINE
T	EXISTING TELEPHONE LINE
W	EXISTING WATER LINE
S	EXISTING SEWER LINE
SD	EXISTING STORM DRAIN LINE
GAS	EXISTING GAS LINE
TV	EXISTING TELEVISION LINE
E	NEW ELECTRICAL LINE
FO	NEW FIBER OPTIC LINE
T	NEW TELEPHONE LINE
W	NEW WATER LINE
S	NEW SEWER LINE
SD	NEW STORM DRAIN LINE
GAS	NEW GAS LINE
TV	NEW TELEVISION LINE

SECTION AND DETAIL KEY

SECTION OR DETAIL NUMBER — A — SHEET ON WHICH PLAN, SECTION OR DETAIL IS LOCATED. (-) INDICATES SECTION OR DETAIL IS ON THE SAME SHEET.

SYMBOL WHERE THERE IS A DETAIL

DETAIL — SCALE: 1/4"-1'-0" — A / S-01 — SHEET NO. WHERE THERE IS A DETAIL

SYMBOL WHERE DETAIL IS DRAWN

DETAIL SYMBOL

SECTION — SCALE: 1/4"-1'-0" — A / S-01 — SHEET NO. WHERE THERE IS A SECTION

SYMBOL WHERE SECTION IS DRAWN

SECTION SYMBOL

A / A-3 — SHEET NO. WHERE SECTION IS DRAWN

SYMBOL WHERE THERE IS A SECTION

LINE IS 2 INCHES AT FULL SIZE
IF NOT 2" – SCALE ACCORDINGLY

BRADY
Water • Power • Transportation
10089 Willow Creek Rd., Suite 375
San Diego, California 92131
P: 858.496.0500 - www.richardbrady.com

REGISTERED PROFESSIONAL ENGINEER — GARRETT D. MURAKAMI — C 90365 — CIVIL — STATE OF CALIFORNIA

08/28/2025

Letter	Description	Date	Initial	Initial
	Revisions			Approved by:

CITY OF REDLANDS
Municipal Utilities and Engineering Department

WATER FACILITIES GENERATORS PROJECT No. 501028

ABBREVIATIONS, LEGEND AND SYMBOLS

G-2

D-10117

Designed by: GDM Date: 08/28/2025
Checked by: KCK Date: 08/28/2025
Drawn by: GDM Date: 08/28/2025
Checked by: KCK Date: 08/28/2025

Reviewed By: Gerard J. Nepomuceno, Civil Engineer, R.C.E. 93200 Date
Approved By: Goutam K. Dobey, City Engineer, R.C.E. 75646 Date

Sheet 02 of 38 Sheets
Scale: Horiz. AS SHOWN Vert. NONE

P:\WHB_South\REDLND\REDLND.006_Engineering and Design of Water Facilities Generators (No. 20230112\WM)\4_EngDesign\2_Dwgs\1-Gen\G-2_Abbrv-Legend.dwg | Plotted: 8/28/2025

TRENCH REPAIR GENERAL NOTES

1. ALL PAVEMENT REPAIR WORK SHALL CONFORM TO THE GENERAL PERMIT CONDITIONS AND TRENCH SPECIFICATIONS, 2018 GREENBOOK AND ANY ADDITIONAL REQUIREMENTS LISTED WITHIN THE PLANS OR PERMIT.
2. ALL TRENCH ACTIVITY SHALL BE REPAIRED WITH A T-CUT REPAIR AS SHOWN ON STD. DWG. NUMBER 191. A BUTT JOINT TRENCH REPAIR, PER STD. DWG. NUMBER 192, SHALL ONLY BE USED WHEN APPROVED IN WRITING BY THE CITY ENGINEER.
3. THERE SHALL BE NO TRENCHING ACTIVITY ON STREETS PAVED OR RESURFACED WITHIN THE PREVIOUS 5 YEARS UNLESS OTHERWISE AUTHORIZED BY THE CITY ENGINEER. SEE SECTION 6.3 OF GENERAL PERMIT CONDITIONS AND TRENCH SPECIFICATIONS, LATEST EDITION.
4. IN THE EVENT TRENCHING IS AUTHORIZED FOR A MORATORIUM STREET, THE OVERLAY AREA WILL BE DETERMINED BY STD. DWG. NUMBER 193.
5. WHEN "EXCESSIVE PAVEMENT REMOVAL" OCCURS, AS DEFINED BY SECTION 8.5 OF THE GENERAL PERMIT CONDITIONS AND TRENCH SPECIFICATIONS, LATEST EDITION, THE OVERLAY AREA WILL BE DETERMINED BY STD. DWG. NUMBER 193.
6. PRIOR TO THE PAVEMENT REPAIR, SAWCUT A CLEAN, STRAIGHT, VERTICAL FACE AT 12" MINIMUM BEYOND THE EDGE OF THE REQUIRED TRENCH WIDTH. ALL LIQUIDS GENERATED BY SAWCUTTING SHALL BE CAPTURED AND DISPOSED OF ACCORDINGLY.
7. A MINIMUM OF 2" OF TEMPORARY ASPHALT PAVEMENT SHALL BE INSTALLED WITHIN THE TRENCH AREA. TEMPORARY PAVING SHALL BE FLUSH WITH SURROUNDING GRADE AND MAINTAINED UNTIL PERMANENT ASPHALT IS INSTALLED.
8. BASE COURSE SHALL BE "B PG 64-10" SHALL BE COMPLETED IN LIFTS BETWEEN 2" AND 3" AND COMPACTED TO 95% RELATIVE COMPACTION.
9. FINISH COURSE SHALL BE "C2 PG 64-10" OR "D1 PG 64-10" (1/2" OR 3/8"), DEPENDING ON OVERLAY THICKNESS, PER STD. DWG. 191 AND COMPACTED TO 95% RELATIVE COMPACTION.
10. BASE PAVEMENT SHALL BE INSTALLED FLUSH WITH THE SURROUNDING GRADE AND GRINDED DOWN TO THE THICKNESS OF THE OVERLAY WHEN THE FINISH COURSE OVERLAY IS INSTALLED.
11. A MINIMUM OF 72 HOURS SHALL PASS BETWEEN THE INSTALLATION OF THE BASE COURSE TO THE INSTALLATION OF THE FINISH COURSE. NOTIFY THE INSPECTOR AT THE START OF THE 72 HOURS TO ALLOW TIME FOR INSPECTION PRIOR TO THE INSTALLATION OF THE FINISH COURSE.
12. APPLY A TACK COAT TO ALL VERTICAL EDGES AND SURFACES TO BE CAPPED.
13. APPLY A SEAL COAT AND #30 SILICA SAND TO FINISHED EDGES USING SS1H ASPHALT EMULSION.
14. ALL PAVEMENT REPAIR SHALL BE COMPLETED WITH LIKE MATERIALS, I.E. ARHM SHALL BE REPLACED WITH ARHM.
15. TRAFFIC CONTROL SHALL REMAIN IN PLACE UNTIL THE NEW PAVEMENT IS ALLOWED TO COOL TO A POINT THAT IT CAN SUSTAIN MOTOR VEHICLES WITHOUT DAMAGING THE FINISHED SURFACE. ANY TRACKING SHALL BE CORRECTED BY THE CONTRACTOR IN CONFORMANCE WITH THE REDBOOK.
16. ALL UNDERGROUND SERVICE ALERT (USA) MARKINGS SHALL BE REMOVED BY THE CONTRACTOR OR PERMIT HOLDER IN ACCORDANCE WITH SECTION 3.5 OF THE GENERAL PERMIT CONDITIONS AND TRENCH SPECIFICATIONS.

CITY OF REDLANDS MUNICIPAL UTILITIES AND ENGINEERING DEPARTMENT

REV.	BY	DATE	TRENCH REPAIR GENERAL NOTES	STD. DWG. NUMBER
			APPROVED [signature] DATE 01/03/2023	190
			GOUTAM K. DOBEY, CITY ENGINEER, RCE 75646	SHEET 1 OF 1

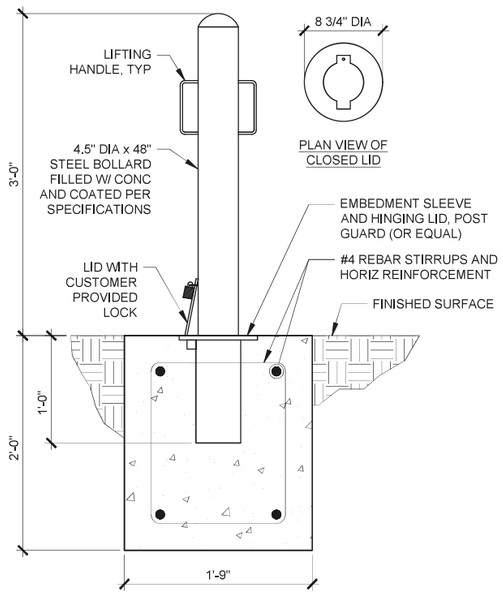

REMOVABLE BOLLARD DETAIL 1

SCALE: NONE

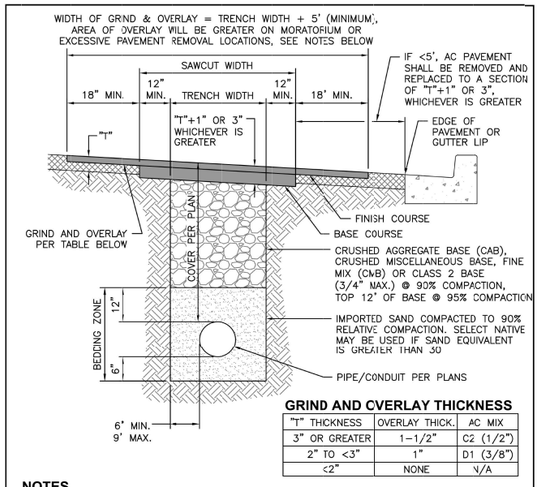

GRIND AND OVERLAY THICKNESS

"T" THICKNESS	OVERLAY THICK.	AC MIX
3" OR GREATER	1-1/2"	C2 (1/2")
2" TO <3"	1"	D1 (3/8")
<2"	NONE	N/A

NOTES

1. SEE STD. DWG. NUMBER 190 FOR TRENCH REPAIR GENERAL NOTES.
2. THERE SHALL BE NO TRENCHING ACTIVITY ON STREETS PAVED OR RESURFACED WITHIN THE PREVIOUS 5 YEARS UNLESS OTHERWISE AUTHORIZED BY THE CITY ENGINEER, SEE SECTION 6.3 OF GENERAL PERMIT CONDITIONS AND TRENCH SPECIFICATIONS, LATEST EDITION.
3. IN THE EVENT TRENCHING IS AUTHORIZED FOR A MORATORIUM STREET, THE OVERLAY AREA WILL BE DETERMINED BY STD. DWG. NUMBER 193.
4. WHEN "EXCESSIVE PAVEMENT REMOVAL" OCCURS, AS DEFINED BY SECTION 8.5 OF THE GENERAL PERMIT CONDITIONS AND TRENCH SPECIFICATIONS, LATEST EDITION, THE OVERLAY AREA WILL BE DETERMINED BY STD. DWG. NUMBER 193

CITY OF REDLANDS MUNICIPAL UTILITIES AND ENGINEERING DEPARTMENT

REV.	BY	DATE	T-CUT TRENCH REPAIR	STD. DWG. NUMBER
			APPROVED [signature] DATE 01/03/2023	191
			GOUTAM K. DOBEY, CITY ENGINEER, RCE 75646	SHEET 1 OF 1

GENERAL NOTES

1. ALL WORK SHALL CONFORM TO THE "STANDARD SPECIFICATIONS FOR PUBLIC WORKS CONSTRUCTION (GREENBOOK)," LATEST EDITION INCLUDING THE LATEST SUPPLEMENTAL AMENDMENTS THERETO, THE "STANDARD PLANS FOR PUBLIC WORKS CONSTRUCTION," LATEST EDITION INCLUDING THE LATEST SUPPLEMENTAL AMENDMENTS THERETO, AND THE "CITY OF REDLANDS MUNICIPAL UTILITIES AND ENGINEERING DEPARTMENT STANDARD SPECIFICATIONS AND DETAIL DRAWINGS", LATEST EDITION INCLUDING THE LATEST SUPPLEMENTAL AMENDMENTS THERETO. ALL WORK SHALL BE COMPLETED TO THE SATISFACTION OF THE ENGINEER OR APPOINTED REPRESENTATIVE.
2. THE APPROXIMATE LOCATIONS OF KNOWN EXISTING UNDERGROUND UTILITIES ARE SHOWN ON THIS PLAN. THE UTILITIES ARE PLOTTED FROM RECORD AND FIELD DATA. THE ENGINEER ASSUMES NO LIABILITY AS TO THE EXACT LOCATION OF SAID LINES WHETHER SHOWN OR NOT SHOWN ON THE PLANS. THE CONTRACTOR IS TO NOTIFY ALL UTILITY COMPANIES PRIOR TO WORK OR EXCAVATION TO DETERMINE THE EXACT LOCATIONS OF UNDERGROUND LINES.
3. SECTION 4216/4217 OF THE GOVERNMENT CODE REQUIRES A DIG ALERT IDENTIFICATION NUMBER BE ISSUED BEFORE THE "ENCROACHMENT PERMIT" WILL BE VALID. FOR YOUR DIG ALERT ID NUMBER, CALL UNDERGROUND SERVICE ALERT AT 811 OR (TOLL FREE) AT L -800-422-4133, TWO WORKING DAYS BEFORE YOU DIG.
4. USE BEST MANAGEMENT PRACTICES (BMPS) TO PREVENT AND CONTAIN ILLEGAL DISCHARGES WITHIN THE PROJECT BOUNDARY. THIS WILL BE IN EFFECT FOR THE ENTIRE DURATION OF THE PROJECT CONSTRUCTION TO ITS COMPLETION.
5. IN NO CASE IS ANY SLOPE TO EXCEED A GRADIENT OF TWO HORIZONTAL TO ONE VERTICAL (2:1).
6. THE CONTRACTOR SHALL OBTAIN ALL NECESSARY INSPECTIONS PRIOR TO POURING ANY CONCRETE.

WATER POLLUTION CONTROL NOTES

THE CONTRACTOR SHALL FOLLOW THE CITY'S GUIDELINES FOR STORM WATER POLLUTION PREVENTION IN PREPARING AND PROVIDING STORM WATER POLLUTION CONTROL AT THE PROJECT SITE, INCLUDING THE IMPLEMENTATION OF APPROVED EROSION/SEDIMENT CONTROL PLANS DURING CONSTRUCTION AS WELL AS THE IMPLEMENTATION OF APPROVED WATER QUALITY MANAGEMENT PLANS.

CONSTRUCTION ACTIVITIES DISTURBING 1 ACRE OR MORE OF LAND SHALL COMPLY WITH THE STATE WATER RESOURCES CONTROL BOARD'S NPDES GENERAL CONSTRUCTION STORM WATER PERMIT. A COPY OF THE NOTICE OF INTENT (NOI) TO INCLUDE THE WASTE DISCHARGE IDENTIFICATION (WDID) NUMBER SHALL BE SUBMITTED AS PART OF THE STORM WATER POLLUTION PREVENTION PLAN (SWPPP) TO THE ENGINEER FOR REVIEW. CALL (909) 782-4130 FOR NOI/WDID INFORMATION.

CONTRACTOR SHALL SUBMIT TO THE CITY FOR REVIEW AND APPROVAL AN EROSION/SEDIMENT CONTROL PLAN. PERMIT(S) WILL NOT BE ISSUED UNTIL PLANS ARE APPROVED AND MAY BE REVOKED IF WORK REQUIRED IN THESE CONTRACT DOCUMENTS ARE NOT COMPLIED WITH.

CONSTRUCTION SITES SHALL BE MAINTAINED BY IMPLEMENTATION OF BMPS IN SUCH MANNER THAT POLLUTANTS ARE NOT DISCHARGED FROM THE SITE TO THE MAXIMUM EXTENT PRACTICABLE. A FEW REFERENCES AVAILABLE TO HELP WITH SELECTION AND IMPLEMENTATION OF APPLICABLE BMPS ARE:

1. CALIFORNIA STORM WATER BEST MANAGEMENT PRACTICE HANDBOOK, AMERICAN PUBLIC WORKS ASSOCIATION;
2. THE CONSTRUCTION SITE BEST MANAGEMENT PRACTICES MANUAL;
3. STORM WATER POLLUTION PREVENTION PLAN AND WATER POLLUTION CONTROL PROGRAM PREPARATION MANUAL;
4. CALIFORNIA REGIONAL WATER QUALITY CONTROL BOARD'S SANTA ANA REGION, GUIDELINES FOR CONSTRUCTION PROJECTS; AND
5. CALIFORNIA REGIONAL WATER QUALITY CONTROL BOARD'S SANTA ANA REGION, EROSION AND SEDIMENT CONTROL FIELD MANUAL.

ALL DISCHARGES INTO THE STORM DRAIN SYSTEM ARE PROHIBITED EXCEPT FOR POTABLE WATER, PROPERLY TREATED DISCHARGE, AND THOSE DISCHARGES SPECIFICALLY APPROVED BY THE ENGINEER. THE FOLLOWING ARE SOME OF THE PROHIBITED DISCHARGES:

1. DISCHARGES THAT COULD HAVE AN IMPACT ON HUMAN HEALTH OR THE ENVIRONMENT, CAUSE OR THREATEN TO CAUSE POLLUTION, CONTAMINATION, OR NUISANCE;
2. DISCHARGES THAT EXCEED ANY APPLICABLE WATER QUALITY STANDARD CONTAINED IN A STATEWIDE WATER QUALITY CONTROL PLAN OR LOCAL BASIN PLAN; AND
3. DISCHARGES CONTAINING HAZARDOUS SUBSTANCES EQUAL TO OR IN EXCESS OF A REPORTABLE QUANTITY LISTED IN FEDERAL REGULATIONS 40 CFR, PARTS 117 AND 302.

MATERIALS THAT CAN CAUSE OR CONTRIBUTE TO POLLUTION OR A VIOLATION OF ANY APPLICABLE WATER QUALITY STANDARD INCLUDE, BUT ARE NOT LIMITED TO: SEDIMENTS; SOLID OR LIQUID CHEMICAL SPILLS; WASTES FROM PAINTS, STAINS, SEALANTS, GLUES, LIMES, PESTICIDES OR HERBICIDES AND WOOD PRESERVATIVES OR SOLVENTS; ASBESTOS FIBERS, PAINT FLAKES OR STUCCO FRAGMENTS; FUELS, OILS, LUBRICANTS OR HYDRAULIC, RADIATOR AND BATTERY FLUIDS; FERTILIZERS; VEHICLE AND EQUIPMENT WASH WATER OR CONCRETE WASH WATER; CONCRETE, DETERGENT OR FLOATABLE WASTES; WASTES FROM ANY ENGINE AND EQUIPMENT STEAM CLEANING OR CHEMICAL DEGREASING; AND CHLORINATED POTABLE WATER LINE FLUSHINGS.

UNLESS EXEMPTED OR AUTHORIZED BY AN NPDES PERMIT, ALL NON-STORM WATER DISCHARGES REQUIRE PRIOR APPROVAL BY THE CITY OR THE STATE WATER RESOURCES CONTROL BOARD WITH ENGINEER APPROVAL.

DURING CONSTRUCTION, TEMPORARY STORAGE OF SUCH MATERIALS AS IDENTIFIED ABOVE MUST OCCUR IN A DESIGNATED AREA PHYSICALLY SEPARATED FROM POTENTIAL STORM WATER RUNOFF, WITH ULTIMATE DISPOSAL IN ACCORDANCE WITH LOCAL, STATE AND FEDERAL REQUIREMENTS.

DE-WATERING OF CONTAMINATED GROUNDWATER OR DISCHARGING CONTAMINATED SOILS VIA SURFACE EROSION IS PROHIBITED.

UNLESS INDICATED OTHERWISE BY THE CITY, ALL PROJECTS, REGARDLESS OF SIZE, CONTRACTOR SHALL SUBMIT FOR REVIEW AND APPROVAL, A WATER QUALITY MANAGEMENT PLAN (WQMP). THE WQMP SHALL CONSIST OF POST CONSTRUCTION BMPS, AS REQUIRED. REFER TO WQMP GUIDELINES.

BRADY
Water • Power • Transportation
10089 Willow Creek Rd., Suite 375
San Diego, California 92131
P: 858.496.0500 - www.richardbrady.com

REGISTERED PROFESSIONAL ENGINEER GARRETT D. MURAMATSU C 90365 CIVIL STATE OF CALIFORNIA
08/28/2025

Letter	Description	Date	Initial	Initial
	Revisions		Approved by:	

LINE IS 2 INCHES AT FULL SIZE
IF NOT 2" – SCALE ACCORDINGLY

CITY OF REDLANDS
Municipal Utilities and Engineering Department

WATER FACILITIES GENERATORS PROJECT No. 501028

GENERAL NOTES AND DETAILS

G-3

D-10117

Designed by: GDM Date: 08/28/2025
Checked by: KCK Date: 08/28/2025
Drawn by: GDM Date: 08/28/2025
Checked by: KCK Date: 08/28/2025

Reviewed By: [signature]
Gerard J. Hepomuceno, Civil Engineer, R.C.E. 93200 Date
Approved By: [signature]
Goutam K. Dobey, City Engineer, R.C.E. 75646 Date

Sheet 03 of 38 Sheets
Scale: Horiz. AS SHOWN
Vert. NONE

P:\WHB_South\REDLND\REDLND.006_Engineering and Design of Water Facilities Generators (No. 20230112WM)\4_EngDesign\2_Dwgs\1-Gen\G-3_GeneralNotes.dwg | Plotted: 8/28/2025

STRUCTURAL ABBREVIATIONS

A.B.	ANCHOR BOLT	REINF.	REINFORCED, REINFORCING
@	AT	REQ'D.	REQUIRED
ACI	AMERICAN CONCRETE INSTITUTE	SCHED.	SCHEDULE
ADDN'L.	ADDITIONAL	SFRS	SEISMIC FORCE RESISTING SYSTEM
AISC	AMERICAN INSTITUTE OF STEEL CONSTRUCTION	SHT.	SHEET
		SIM.	SIMILAR
ALT.	ALTERNATE	S.M.S.	SHEET METAL SCREW
APPROX.	APPROXIMATE	SPC'G.	SPACING
ARCH'L.	ARCHITECTURAL	SPEC.	SPECIFICATION(S)
ASTM	AMERICAN SOCIETY FOR TESTING AND MATERIALS	SQ.	SQUARE
		S.S.	STAINLESS STEEL
BEL.	BELOW	STD.	STANDARD
B.F.	BRACED FRAME	STIFF.	STIFFENER
BLD'G.	BUILDING	STRUC'L.	STRUCTURAL
BM.	BEAM	SYMM.	SYMMETRICAL
B.O.F.	BOTTOM OF FOOTING	T	THICKNESS
B.O.S.	BOTTOM OF STEEL	T&B	TOP & BOTTOM
BOT.	BOTTOM	THR'D.	THREADED
B.U.	BACK UP	THRU	THROUGH
C	CAMBER	T.O.C.	TOP OF CONCRETE
CBC	CALIFORNIA BUILDING CODE	T.O.F.	TOP OF FOOTING
C.J.	CONSTRUCTION JOINT OR COLD JOINT	T.O.M.	TOP OF MASONRY
C.J.P.	COMPLETE JOINT PENETRATION	T.O.S.	TOP OF STEEL
℄, ℄	CENTER LINE	T.O.W.	TOP OF WALL
CLR.	CLEAR	TYP.	TYPICAL
CMU	CONCRETE MASONRY UNIT	U.O.N.	UNLESS OTHERWISE NOTED
COL.	COLUMN(S)	VERT.	VERTICAL
CONC.	CONCRETE	V.I.F.	VERIFY IN FIELD
CONN.	CONNECTION	W/	WITH
CONST.	CONSTRUCTION	WSHR.	WASHER
CONT.	CONTINUOUS		
DBL.	DOUBLE		
DIA.	DIAMETER		
DIM.	DIMENSION		
DWG.	DRAWING		
DWL.	DOWEL		
EA.	EACH		
E.F.	EACH FACE		
E.J.	EXPANSION JOINT		
EL., ELEV.	ELEVATION		
EMBED.	EMBEDMENT		
E.O.S.	EDGE OF STEEL		
EQ.	EQUAL		
EQUIP.	EQUIPMENT		
E.S.	EACH SIDE		
E.W.	EACH WAY		
EXIST., (E)	EXISTING		
EXP.	EXPANSION		
F.F.	FINISH FLOOR		
F.G.	FINISH GRADE		
FLG.	FLANGE		
FLR.	FLOOR		
F.O.C.	FACE OF CONCRETE		
F.O.M.	FACE OF MASONRY		
F.O.S.	FACE OF STEEL		
FRM'G.	FRAMING		
FRP	FIBER REINFORCED PLASTIC		
F.S.	FAR SIDE		
FT.	FOOT–FEET		
FTG.	FOOTING		
GA.	GAUGE		
GALV.	GALVANIZED		
GR.	GRADE		
GYP.	GYPSUM		
HK.	HOOK		
HORIZ.	HORIZONTAL		
HT.	HEIGHT		
HSS	HOLLOW STRUCTURAL STEEL		
I.D.	INSIDE DIAMETER		
INT.	INTERIOR		
JT.	JOINT		
L	LENGTH		
LB	POUND		
LLV	LONG LEG VERTICAL		
LONG.	LONGITUDINAL		
MAT'L	MATERIAL		
MAX.	MAXIMUM		
MECH'L.	MECHANICAL		
MFR.	MANUFACTURER		
MIN.	MINIMUM		
M.O.	MASONRY OPENING		
NO., #	NUMBER		
N.S.	NEAR SIDE		
N.T.S.	NOT TO SCALE		
O.C.	ON CENTER		
O.H.	OPPOSITE HAND		
OPN'G.	OPENING		
PL., P	PLATE		
PERP.	PERPENDICULAR		
R., RAD.	RADIUS		
RDP	ROOF DECK PLATE		

GENERAL STRUCTURAL NOTES

GENERAL

1. THE CONTRACTOR SHALL VERIFY ALL DIMENSIONS PRIOR TO STARTING WORK. THE ENGINEER SHALL BE NOTIFIED OF ANY DISCREPANCIES.
2. THE CONTRACTOR SHALL PROVIDE AND MAINTAIN ADEQUATE ERECTION SHORING AND BRACING AS REQUIRED FOR STABILITY OF ALL STRUCTURES AND EMBANKMENTS DURING ALL PHASES OF CONSTRUCTION.
3. IN NO CASE SHALL WORKING DIMENSIONS BE SCALED FROM PLANS, SECTIONS OR DETAILS ON THE DRAWINGS.
4. BEFORE COMMENCING ANY EXCAVATION, THE CONTRACTOR SHALL VERIFY THE LOCATION OF ALL UNDERGROUND UTILITIES AND SHALL NOT PERFORM ANY WORK THAT WILL DAMAGE OR INTERFERE WITH THEIR SERVICE.
5. THE CONTRACTOR SHALL TAKE PRECAUTIONS TO PROTECT ALL EXISTING FACILITIES AND UTILITIES AND SHALL NOT PERFORM ANY WORK THAT WILL DAMAGE OR INTERFERE WITH THEIR SERVICE.
6. THE CONTRACT STRUCTURAL DRAWINGS REPRESENT THE FINISHED STRUCTURES. THEY DO NOT INDICATE METHODS OF CONSTRUCTION. THE CONTRACTOR SHALL PROVIDE ALL MEASURES NECESSARY TO PROTECT EXISTING AND NEW STRUCTURES DURING CONSTRUCTION. SUCH MEASURES SHALL INCLUDE, BUT NOT BE LIMITED TO, BRACING, SHORING, ETC, FOR ALL CONSTRUCTION PHASE LOADS.
7. DURING THE ENTIRE CONSTRUCTION PERIOD, IT SHALL BE THE CONTRACTOR'S RESPONSIBILITY TO MAINTAIN CONDITIONS AT THE JOB SITE SO AS TO MEET IN ALL RESPECTS ALL APPLICABLE SAFETY LAWS, RULES, ORDINANCES AND REGULATIONS. THIS PROVISION SHALL APPLY TO ALL PERSONNEL EMPLOYED OR SUPERVISED BY THE CONTRACTOR AT THE JOB SITE.
8. ALL WORK SHALL BE PERFORMED IN COMPLIANCE WITH THE 2022 EDITION OF THE CALIFORNIA BUILDING CODE.

REINFORCED CONCRETE

1. ALL CONCRETE SHALL HAVE A MINIMUM ULTIMATE COMPRESSIVE STRENGTH AT 28 DAYS OF 4500 PSI. CEMENT SHALL CONFORM TO ASTM C150, TYPE V. MAXIMUM WATER–CEMENT RATIO SHALL BE 0.45. MAXIMUM SLUMP PER ASTM C143 SHALL BE 5" EXCEPT A MAXIMUM SLUMP OF 8" IS PERMITTED AFTER INTRODUCTION OF AN APPROVED "SUPERPLASTICIZER". MAXIMUM AGGREGATE SIZE SHALL BE 1".
2. ALL REINFORCING STEEL, ANCHOR BOLTS, DOWELS AND INSERTS SHALL BE WELL–SECURED IN POSITION PRIOR TO PLACING CONCRETE.
3. PROVIDE A 3/4" CHAMFER ON ALL EXPOSED CORNERS UNLESS OTHERWISE NOTED.
4. ALL CONSTRUCTION JOINTS SHALL BE ROUGHENED AND CLEANED PRIOR TO PLACING NEW CONCRETE.
5. ALL CONSTRUCTION JOINTS IN CONCRETE SHALL HAVE A 1/4" MINIMUM AMPLITUDE ROUGHNESS. SANDBLAST AND CLEAN BEFORE PLACING NEW CONCRETE.

REINFORCED CONCRETE BLOCK MASONRY

1. CONCRETE MASONRY UNITS SHALL BE MEDIUM WEIGHT UNITS IN CONFORMANCE WITH ASTM C90; f'm = 2000 PSI.
2. MORTAR SHALL BE TYPE S IN CONFORMANCE WITH ASTM C270 WITH A MINIMUM ULTIMATE COMPRESSIVE STRENGTH OF 1800 PSI.
3. GROUT SHALL CONFORM TO ASTM C476 AND HAVE A MINIMUM ULTIMATE COMPRESSIVE STRENGTH OF 2000 PSI.
4. ALL CELLS SHALL BE SOLID GROUTED AND CONSOLIDATED WITH A MECHANICAL VIBRATOR.
5. GROUT SHALL HAVE AN ADMIXTURE TO REDUCE SHRINKAGE.
6. WHEN GROUTING IS STOPPED FOR ONE HOUR OR LONGER, HORIZONTAL CONSTRUCTION JOINTS SHALL BE FORMED BY STOPPING THE GROUT POUR 1 1/2" BELOW THE TOP OF THE UPPERMOST UNIT.
7. FOOTING DOWELS SHALL MATCH VERTICAL MASONRY WALL REINFORCING IN SIZE AND SPACING, UNLESS OTHERWISE NOTED. DOWELS SHALL LAP VERTICAL REINFORCING WITH A 48 BAR DIAMETER MINIMUM CONTACT LAP SPLICE, UNLESS OTHERWISE NOTED.

REINFORCING STEEL

1. BAR REINFORCING SHALL CONFORM TO ASTM A615, GRADE 60. WELDED BARS SHALL CONFORM TO ASTM A706.
2. MINIMUM BAR LAP SPLICE LENGTHS SHALL BE 48 BAR DIAMETERS (2'–0" MINIMUM), UNLESS OTHERWISE INDICATED.
3. ALL LAP SPLICES SHALL BE CONTACT LAP SPLICES UNLESS OTHERWISE INDICATED.
4. FOOTING DOWELS SHALL MATCH VERTICAL WALL REINFORCING IN SIZE AND SPACING UNLESS OTHERWISE INDICATED.
5. MINIMUM CONCRETE COVER FOR REINFORCING STEEL SHALL BE AS FOLLOWS UNLESS SHOWN OTHERWISE ON THE DRAWINGS:

CONCRETE CAST AGAINST EARTH	3"
FORMED CONCRETE EXPOSED TO EARTH	2"
CONCRETE EXPOSED TO WEATHER	2"
ALL OTHER	AS INDICATED

6. ALL DETAILING, FABRICATION AND ERECTION OF REINFORCING STEEL SHALL CONFORM TO THE LATEST EDITION OF ACI 315, DETAILS AND DETAILING OF CONCRETE REINFORCEMENT, UNLESS OTHERWISE NOTED.

FOUNDATION

1. ALLOWABLE BEARING PRESSURE USED FOR DESIGN AT EACH SITE IS SHOWN BELOW. SEE GEOTECHNICAL REPORTS BY GROUP DELTA CONSULTANTS, INC. DATED AUGUST 18, 2021 AND ADDITIONAL GEOTECHNICAL RECOMMENDATIONS DATED DECEMBER 5, 2023.

   a. AGATE PUMP STATION: 2,000 PSF
   b. COUNTRY CLUB PUMP STATION: 4,000 PSF
   c. FIFTH AVENUE PUMP STATION: 2,000 PSF
   d. TEXAS STREET PUMP STATION: 2,000 PSF

EARTHWORK REQUIREMENTS

1. ALL FILL AND BACKFILL SHOULD BE PLACED AND COMPACTED AT OR SLIGHTLY ABOVE OPTIMUM MOISTURE CONTENT PER ASTM D1557 USING EQUIPMENT CAPABLE OF PRODUCING A UNIFORMLY COMPACTED PRODUCT. THE LOOSE LIFT THICKNESS SHOULD BE 8 INCHES UNLESS PERFORMANCE OBSERVED AND TESTING DURING EARTHWORK INDICATES A THINNER LOOSE LIFT IS NEEDED.
2. THE MINIMUM RECOMMENDED RELATIVE COMPACTION IS 90% AND 95 % FOR PAVEMENT SECTIONS OF THE MAXIMUM DRY DENSITY PER ASTM D1557. SUFFICIENT OBSERVATION AND TESTING SHOULD BE PERFORMED BY THE PROJECT GEOTECHNICAL CONSULTANT DURING GRADING SO THAT AN OPINION CAN BE RENDERED AS TO THE COMPACTION ACHIEVED. ROCKS OR CONCRETE FRAGMENTS GREATER THAN 3 INCHES IN MAXIMUM DIMENSION SHOULD NOT BE USED IN COMPACTED FILL.

   SEE GEOTECHNICAL REPORT BY GROUP DELTA CONSULTANTS, INC. DATED DECEMBER 5, 2023 FOR COMPLETE REQUIREMENTS.

STRUCTURAL STEEL

1. EXCEPT AS OTHERWISE INDICATED, ALL STRUCTURAL STEEL FABRICATION AND ERECTION SHALL BE PERFORMED IN ACCORDANCE WITH THE AISC SPECIFICATION FOR STRUCTURAL STEEL BUILDINGS AND CODE OF STANDARD PRACTICE FOR STEEL BUILDINGS AND BRIDGES AS CONTAINED IN THE FOURTEENTH EDITION OF THE STEEL CONSTRUCTION MANUAL.
2. CHANNELS, ANGLES, RODS, PLATES AND BARS SHALL CONFORM TO ASTM A36 UNLESS OTHERWISE NOTED ON THE DRAWINGS.
3. WIDE FLANGE SECTIONS SHALL CONFORM TO ASTM A992.
4. STRUCTURAL TUBES (HSS) SHALL CONFORM TO ASTM A500, GRADE C.
5. PIPE SHALL CONFORM TO ASTM A53, GRADE B.

STRUCTURAL STEEL - CONTINUED

6. UNLESS INDICATED OTHERWISE, ALL ANCHOR RODS (BOLTS) SHALL CONFORM TO ASTM F1554 GRADE 36
7. ANCHOR BOLTS SHALL BE HEADED ANCHOR BOLTS CONFORMING TO ASTM F1554, GRADE 36, UNLESS OTHERWISE NOTED ON THE DRAWINGS.
8. BOLTS SHALL CONFORM TO ASTM A325 AND SHALL BE PRETENSIONED UNLESS OTHERWISE NOTED ON THE DRAWINGS.
9. BOLT HOLES SHALL BE 1/16" OVERSIZE, UNLESS OTHERWISE NOTED.
10. BURNING OF HOLES FOR BOLTS SHALL NOT BE PERMITTED.
11. WELDING SHALL BE DONE BY A.W.S. QUALIFIED WELDERS IN CONFORMANCE WITH A.W.S. D1.1 USING E70 ELECTRODES UNLESS OTHERWISE INDICATED.
12. STRUCTURAL STEEL SHALL HAVE TWO COATS OF SHOP COATING PER PROJECT SPECIFICATION

DESIGN CRITERIA

DESIGN CRITERIA

GOVERNING CODE: 2022 CALIFORNIA BUILDING CODE (CBC)
ROOF LIVE LOAD = 20 PSF (REDUCIBLE)

1.
2.

WIND DESIGN DATA

ULTIMATE WIND SPEED = 110 MPH
RISK CATEGORY IV
EXPOSURE C

EARTHQUAKE DESIGN DATA FOR AGATE PUMP STATION SITE

I = 1.5 (RISK CATEGORY IV)
Ss = 2.190g
S1 = 0.885g
SITE CLASS C
Sds = 1.732g
Sd1 = 0.924g
SEISMIC DESIGN CATEGORY D
ANALYSIS BY EQUIVALENT LATERAL FORCE PROCEDURE

EARTHQUAKE DESIGN DATA FOR COUNTRY CLUB PUMP STATION SITE

I = 1.5 (RISK CATEGORY IV)
Ss = 1.738g
S1 = 0.680g
SITE CLASS C
Sds = 1.365g
Sd1 = 0.987g
SEISMIC DESIGN CATEGORY D
ANALYSIS BY EQUIVALENT LATERAL FORCE PROCEDURE

EARTHQUAKE DESIGN DATA FOR FIFTH AVENUE PUMP STATION SITE

I = 1.5 (RISK CATEGORY IV)
Ss = 1.770g
S1 = 0.734g
SITE CLASS D
Sds = 1.428g
Sd1 = 1.067g
SEISMIC DESIGN CATEGORY D
ANALYSIS BY EQUIVALENT LATERAL FORCE PROCEDURE

EARTHQUAKE DESIGN DATA FOR TEXAS STREET PUMP STATION SITE

I = 1.5 (RISK CATEGORY IV)
Ss = 1.845g
S1 = 0.739g
SITE CLASS D
Sds = 1.466g
Sd1 = 1.281g
SEISMIC DESIGN CATEGORY D
ANALYSIS BY EQUIVALENT LATERAL FORCE PROCEDURE

STRUCTURAL OBSERVATION

STRUCTURAL OBSERVATION REQUIREMENTS

THE OWNER SHALL EMPLOY THE ENGINEER RESPONSIBLE FOR THE STRUCTURAL DESIGN, OR ANOTHER REGISTERED ENGINEER DESIGNATED BY THE ENGINEER RESPONSIBLE FOR THE STRUCTURAL DESIGN, TO PERFORM STRUCTURAL OBSERVATION AS DEFINED IN THE CALIFORNIA BUILDING CODE. OBSERVED DEFICIENCIES SHALL BE REPORTED IN WRITING TO THE OWNER'S REPRESENTATIVE, SPECIAL INSPECTOR, CONTRACTOR, AND THE BUILDING OFFICIAL. THE STRUCTURAL OBSERVER SHALL SUBMIT TO THE BUILDING OFFICIAL A WRITTEN STATEMENT THAT THE SITE VISITS HAVE BEEN MADE AND IDENTIFYING ANY REPORTED DEFICIENCIES THAT, TO THE BEST OF THE STRUCTURAL OBSERVER'S KNOWLEDGE, HAVE NOT BEEN RESOLVED.

STRUCTURAL OBSERVATION SHALL BE PERFORMED AT THE FOLLOWING STAGES OF CONSTRUCTION:

1. FOUNDATION: PRIOR TO PLACEMENT OF STRUCTURAL CONCRETE. ALL REINFORCING STEEL, ANCHOR BOLTS, DOWELS AND OTHER INSERTS SHALL BE SECURED IN PLACE PRIOR TO STRUCTURAL OBSERVATION.

CONTRACTOR RESPONSIBILITY

CONTRACTOR RESPONSIBILITY

1. THE CONTRACTOR SHALL SUBMIT A WRITTEN "STATEMENT OF CONTRACTOR'S RESPONSIBILITY" PRIOR TO ISSUANCE OF THE PERMIT CONTAINING THE FOLLOWING:

   a. ACKNOWLEDGMENT OF AWARENESS OF THE SPECIAL REQUIREMENTS CONTAINED IN THE STATEMENT OF SPECIAL INSPECTION;

   b. ACKNOWLEDGMENT THAT CONTROL WILL BE EXERCISED TO OBTAIN CONFORMANCE WITH THE CONSTRUCTION DOCUMENTS APPROVED BY THE BUILDING OFFICIAL;

   c. PROCEDURES FOR EXERCISING CONTROL WITHIN THE CONTRACTOR'S ORGANIZATION, THE METHOD AND FREQUENCY OF REPORTING AND THE DISTRIBUTION OF THE REPORTS; AND

   d. IDENTIFICATION AND QUALIFICATIONS OF THE PERSON(S) EXERCISING SUCH CONTROL AND THEIR POSITION(S) IN THE ORGANIZATION.

2. THE CONTRACTOR SHALL SUBMIT TO THE CITY DIVISION OF BUILDING & SAFETY – INSPECTION SERVICES A "CERTIFICATE OF SATISFACTORY COMPLETION OF WORK REQUIRING SPECIAL INSPECTION".

STATEMENT OF SPECIAL INSPECTIONS

DESIGNATED SEISMIC SYSTEMS REQUIRING SPECIAL INSPECTION

1. ANCHORAGE OF ELECTRICAL EQUIPMENT USED FOR EMERGENCY OR STANDBY POWER SYSTEMS.
2. MASONRY WALLS AND THEIR ANCHORAGE.

STRUCTURAL TESTING FOR SEISMIC RESISTANCE

1. MASONRY:
   - CERTIFICATES OF COMPLIANCE USED IN MASONRY CONSTRUCTION
   - VERIFICATION OF f'm PRIOR TO CONSTRUCTION AND EVERY 5,000 SQUARE FEET DURING CONSTRUCTION.
   - VERIFICATIONS OF PROPORTIONS OF MATERIALS IN MORTAR AND GROUT AS DELIVERED TO THE SITE.
2. REINFORCING STEEL:
   - CERTIFIED MILL TEST REPORTS SHALL BE PROVIDED FOR EACH SHIPMENT OF REINFORCING STEEL.
   - SHOP DRAWINGS.
3. SEISMIC QUALIFICATION OF MECHANICAL AND ELECTRICAL EQUIPMENT:
   - MECHANICAL AND ELECTRICAL EQUIPMENT SHALL BE SEISMICALLY QUALIFIED IN ACCORDANCE WITH THE 2022 CALIFORNIA BUILDING CODE, SECTION 1705.13.

SEE SHEET GS-2 FOR ADDITIONAL SPECIAL INSPECTION REQUIREMENTS

BRADY
Water • Power • Transportation
10089 Willow Creek Rd., Suite 375
San Diego, California 92131
P: 858.496.0500 - www.richardbrady.com

REGISTERED PROFESSIONAL ENGINEER
KARL C. KUEBLER
No. 67975
CIVIL
STATE OF CALIFORNIA
08/28/2025

LINE IS 2 INCHES AT FULL SIZE
IF NOT 2" – SCALE ACCORDINGLY

Letter	Description	Date	Initial	Initial
	Revisions			Approved by:

CITY OF REDLANDS
Municipal Utilities and Engineering Department

WATER FACILITIES GENERATORS
PROJECT No. 501028

STRUCTURAL NOTES AND ABBREVIATIONS

GS-1

Designed by:	KCK
Date:	08/28/2025
Checked by:	ADB
Date:	08/28/2025
Drawn by:	CTM
Date:	08/28/2025
Checked by:	ADB
Date:	08/28/2025

Reviewed By: _____
Gerard J. Nepomuceno, Civil Engineer, R.C.E. 93200 Date
Approved By: _____
Goutam K. Dobey, City Engineer, R.C.E. 75646 Date

Sheet 04 of 38 Sheets
Scale: Horiz. AS SHOWN
Vert. NONE

D-10117

P:\WHB_South\REDLND\REDLND.006_Engineering and Design of Water Facilities Generators (No. 20230112WM)\4_EngDesign\2_Dwgs\2-Stru\GS-1_STURCTURAL NOTES AND ABBREVIATIONS.dwg | Plotted: 8/28/2025

STATEMENT OF SPECIAL INSPECTIONS REQUIRED INSPECTIONS AND VERIFICATIONS

TYPE OF WORK	INSPECTION TYPE	REFERENCED STANDARD	CBC SECTION	ACI 530/ ASCE 5/ TMS 402	ACI 530.1/ ASCE 6/ TMS 602
1. SOIL CONDITIONS AND PLACEMENT		CBC 1705.6			
a. Verify materials below base slabs are adequate to achieve design bearing capacity	Periodic				
b. Verify excavations extend to proper depth and material	Periodic				
c. Observe subgrade prior to fill placement for proper preparation	Periodic				
d. Perform classification and testing of controlled fill materials	Periodic				
e. Verify use of proper materials, densities and lift thicknesses during placement and compaction of controlled fill	Continuous				
2. CONCRETE CONSTRUCTION Design Strength f'c = 4,500 psi					
a. Inspect formwork for shape, location and dimensions of concrete members	Periodic	ACI 318: 6.1.1			
b. Verify use of required design mix	Periodic	ACI 318: Chap. 4, 5.2 – 5.4			
c. Inspect reinforcing steel and placement	Periodic	ACI 318: 3.5, 7.1 – 7.7			
d. Inspect bolts installed in concrete	Periodic	CBC 1909.1			
e. Inspect concrete placement	Continuous	ACI 318: 5.9, 5.10			
f. Obtain specimens for strength tests, perform slump and air content tests and determine temperature	Continuous	ASTM C172, ASTM C31, ACI 318: 5.6, 5.8			
g. Inspect maintenance of specified curing temperature and techniques	Periodic	ACI 318: 5.11 – 5.13			
3. HIGH-STRENGTH BOLTS, NUTS AND WASHERS		AISC 360-10, CHAPTER N			
a. Manufacturer's certificate of compliance required	Periodic				
b. Inspect bearing-type connections (pre-tensioned)	Periodic				
c. Inspect Class A faying surfaces	Periodic				
4. MASONRY (LEVEL C SPECIAL INSPECTION)					
a. Minimum testing and verification prior to construction shall include:					
1. Certificates of compliance			Sec. 2105.2		Art. 1.5
2. Verification of f'm prior to construction	Periodic				Art. 1.6
b. From the beginning of masonry construction, the following shall be verified to ensure compliance:					
1. Proportions of site-prepared mortar and grout	Periodic				Art. 2.6A/B
2. Placement of masonry units and construction of mortar joints	Periodic				Art. 3.2/3
3. Placement of reinforcement, connectors and anchorages	Continuous			Sec. 1.16	Art. 3.4
4. Grout space prior to grouting	Continuous				Art. 3.2
5. Placement of grout	Continuous				Art. 3.5
c. The inspection program shall verify:					
1. Size and location of structural elements (tolerances)	Periodic				Art. 3.3F
2. Type, size and location of anchors, including other details of anchorage of masonry to structural members, frames or other construction	Periodic			Sec. 1.16.4.3, 1.17.1	
3. Specified size, grade and type of reinforcement	Periodic			Sec. 1.16	Art. 2.4, 3.4
4. Protection of masonry during cold weather (temperature below 40°F) or hot weather (temperature above 90°F)	Periodic		Sec. 2104.3, 2104.4		Art. 1.8C. 1.8D
d. Preparation of any required grout specimens, mortar specimens and/or prisms shall be observed	Periodic		Sec. 2105.2.2, 2105.3		Art. 1.4
e. Compliance with required inspection provisions of the construction documents and the approved submittals shall be verified	Periodic				Art. 1.5

STATEMENT OF SPECIAL INSPECTIONS REQUIRED INSPECTIONS AND VERIFICATIONS

TYPE OF WORK	INSPECTION TYPE	REFERENCED STANDARD
5. MECHANICAL AND ELECTRICAL COMPONENTS ANCHORAGE		
a. Seismic anchorage of electrical equipment for emergency or standby power systems.	Periodic	CBC 1705.11.6
b. Seismic anchorage of piping systems which carry flammable, combustible, or toxic contents and their associated mechanical units.	Periodic	CBC 1705.11.6
6. ADHESIVE ANCHORS		
a. Anchorage of threaded rods and reinforcing bars in concrete	Periodic	ICC ESR-3187
b. Anchorage of threaded rods in masonry	Periodic	ICC ESR-2682

LINE IS 2 INCHES AT FULL SIZE
IF NOT 2" – SCALE ACCORDINGLY

BRADY
Water • Power • Transportation
10089 Willow Creek Rd., Suite 375
San Diego, California 92131
P: 858.496.0500 - www.richardbrady.com

REGISTERED PROFESSIONAL ENGINEER
KARL C. KUESTER
No. 67975
CIVIL
STATE OF CALIFORNIA
08/28/2025

Letter	Description	Date	Initial	Initial
	Revisions		Approved by:	

CITY OF REDLANDS
Municipal Utilities and Engineering Department

WATER FACILITIES GENERATORS
PROJECT No. 501028

STRUCTURAL NOTES AND ABBREVIATIONS

GS-2

D-10117

Designed by: KCK Date: 08/28/2025
Checked by: ADB Date: 08/28/2025
Drawn by: CTM Date: 08/28/2025
Checked by: ADB Date: 08/28/2025

Reviewed By: Gerard J. Nepomuceno, Civil Engineer, R.C.E. 93200 Date
Approved By: Goutam K. Dobey, City Engineer, R.C.E. 75646 Date

Sheet 05 of 38 Sheets
Scale: Horiz. AS SHOWN
Vert. NONE

P:\WHB_South\REDLND\REDLND.006_Engineering and Design of Water Facilities Generators (No. 20230112WM)\4_EngDesign\2_Dwgs\2_Stru\GS-2_STRUCTURAL NOTES AND ABBREVIATIONS.dwg | Plotted: 8/28/2025

DIMENSION TABLE FOR 90° AND 180° HOOKS				
BAR SIZE	A IN.	B IN.	C IN.	D IN.
#3	5	3	6	2 1/4
#4	6	4	8	3
#5	7	5	10	3 3/4
#6	8	6	12	4 1/2
#7	10	7	14	5 1/4
#8	11	8	16	6
#9	15	11 3/4	19	9 1/2
#10	17	13 1/4	22	10 3/4
#11	19	14 3/4	24	12

DIMENSION TABLE FOR 135° HOOKS			
BAR SIZE	D IN.	E IN.	F IN.
#3	1 1/2	4 1/4	2 1/2
#4	2	4 1/2	3
#5	2 1/2	5 1/2	3 3/4
#6	4 1/2	8	4 1/2

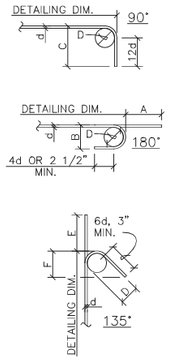

NOTE: UNLESS OTHERWISE NOTED, THESE DIMENSIONS SHALL BE USED FOR ALL INDICATED HOOKS

TYPICAL HOOKS FOR REINFORCING BARS (1 GS-3)

SCALE: NONE

NOTES:
1. 24" BELOW SUBGRADE SHALL BE REMOVED AND RECOMPACTED TO A MIN OF 90%. NATIVE SOILS ARE SUITABLE FOR REUSE AFTER SCREENING AND PROCESSING PRIOR TO FILL THE BOTTOM OF EXCAVATION .SHALL BE CHECKED BY SPECIAL INSPECTOR . IF DEEMED NOT SUITABLE, CONTRACTOR TO SUBMIT STRUCTURAL FILL IN ACCORDANCE WITH GREENBOOK.
2. GRADING SHALL EXTEND 5' BEYOND IMPROVEMENTS, UON.
3. SEE SPECIFICATIONS FOR COMPACTION AND FILL REQUIREMENTS.

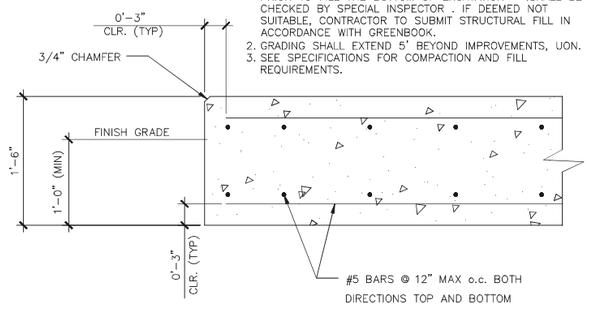

TYPICAL EQUIPMENT PAD DETAIL (AS REQUIRED) (2 GS-3)

SCALE: NONE

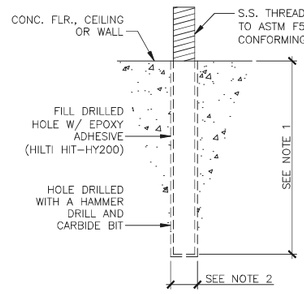

NOTES:
1. MIN. EMBEDMENT = 9 ROD DIA. U.O.N.
2. DRILLED HOLE DIA. = ROD DIA. + X
   X = 1/16" FOR 1/2" AND SMALLER
   X = 1/8" FOR 5/8" AND LARGER
3. MATERIALS AND INSTALLATION PROCEDURES SHALL CONFORM TO ICC EVALUATION SERVICE REPORT ESR-3187 (NO SUBSTITUTIONS PERMITTED).
4. INSTALLERS SHALL BE TRAINED BY THE MANUFACTURER'S REPRESENTATIVE.
5. SPECIAL INSPECTION IS REQUIRED.

TYPICAL THREADED ROD ADHESIVE ANCHOR (3 GS-3)

SCALE: NONE

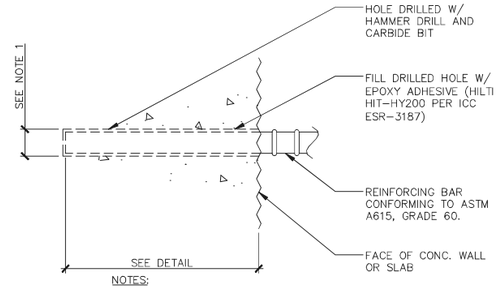

NOTES:
1. DRILLED HOLE DIA. = BAR DIA. + 1/8"
2. MATERIALS AND INSTALLATION PROCEDURES SHALL CONFORM TO ICC EVALUATION SERVICE REPORT ICC-ER-3187 (NO SUBSTITUTION PERMITTED).
3. INSTALLERS SHALL BE TRAINED BY THE MANUFACTURER'S REPRESENTATIVE.
4. SPECIAL INSPECTION IS REQUIRED.

TYPICAL REBAR ADHESIVE ANCHOR (4 GS-3)

SCALE: NONE

TYPICAL SEALANT JOINT DETAIL (5 GS-3)

SCALE: NONE

NOTES:
1. HEIGHT OF PAD SHALL BE AS SPECIFIED OR AS DETERMINED BY EQUIPMENT MANUFACTURER.
2. OPTION: #4 DOWELS MAY BE CAST INTO BASE SLAB WITH 3 1/2" EMBEDMENT AND STANDARD HOOK. UPPER PORTION MAY BE BENT LATER.
3. ALL PAD DIMENSIONS SHALL BE VERIFIED PRIOR TO CONSTRUCTION.

TYPICAL EQUIPMENT PAD DETAILS (AS REQUIRED) (6 GS-3)

SCALE: NONE

LINE IS 2 INCHES AT FULL SIZE
IF NOT 2" – SCALE ACCORDINGLY

Letter	Description	Date	Initial	Initial
	Revisions			Approved by:

BRADY
Water • Power • Transportation
10089 Willow Creek Rd., Suite 375
San Diego, California 92131
P: 858.496.0500 - www.richardbrady.com

REGISTERED PROFESSIONAL ENGINEER KARL C. KUEBLER No. 67975 CIVIL STATE OF CALIFORNIA
08/28/2025

CITY OF REDLANDS
Municipal Utilities and Engineering Department

WATER FACILITIES GENERATORS PROJECT No. 501028

GENERAL STRUCTURAL DETAILS

GS-3

Designed by: KCK Date: 08/28/2025
Checked by: ADB Date: 08/28/2025
Drawn by: CTM Date: 08/28/2025
Checked by: ADB Date: 08/28/2025

Reviewed By:
Gerard J. Nepomuceno, Civil Engineer, R.C.E. 93200 Date
Approved By:
Goutam K. Dobey, City Engineer, R.C.E. 75646 Date

Sheet 06 of 38 Sheets
Scale: Horiz. AS SHOWN
Vert. NONE

D-10117

P:\WHB_South\REDLND\REDLND.006_Engineering and Design of Water Facilities Generators (No. 20230112VM)\4_EngDesign\2_Dwgs\2-Stru\GS-3_GENERAL STRUCTURAL DETAILS.dwg | Plotted: 8/28/2025

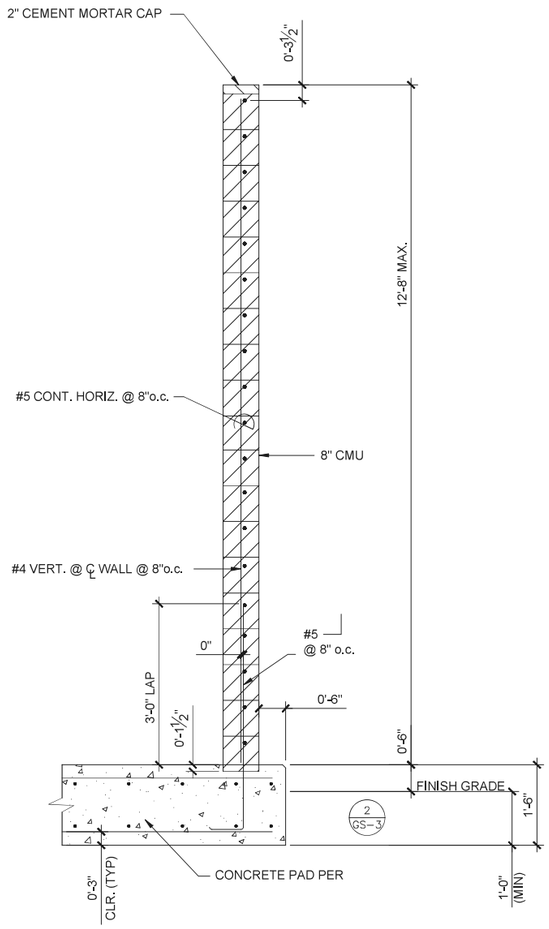

ENCLOSURE WALL SECTION

SCALE: 3/4" = 1'-0"

A GS-4

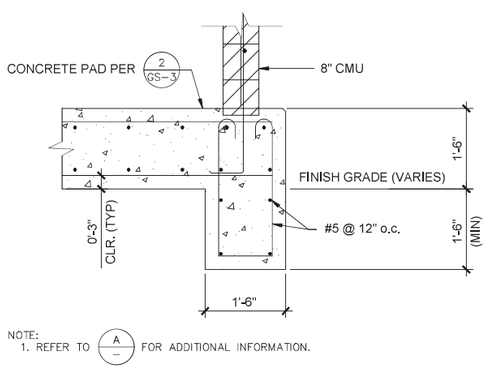

NOTE:
1. REFER TO A — FOR ADDITIONAL INFORMATION.

DOWNTURNED - ENCLOSURE WALL SECTION

SCALE: 3/4" = 1'-0"

B GS-4

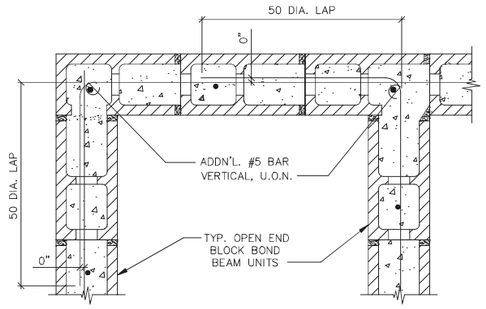

CORNER **INTERSECTION**

TYPICAL 8" CMU WALL CORNER AND INTERSECTION REINFORCING

SCALE: NONE

1 GS-4

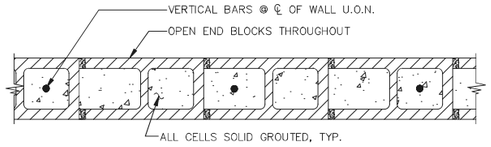

TYPICAL 8" WALL COURSING BETWEEN BOND BEAM UNITS

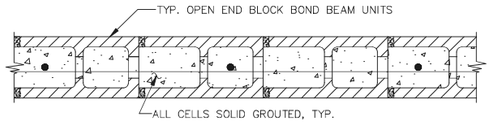

TYPICAL 8" BOND BEAM COURSE

NOTES:
1. UNITS SHALL BE LAID IN RUNNING BOND.
2. GROUT SHALL HAVE A SHRINKAGE REDUCTION ADMIXTURE

TYPICAL 8" CMU WALL COURSES

SCALE: NONE

2 GS-4

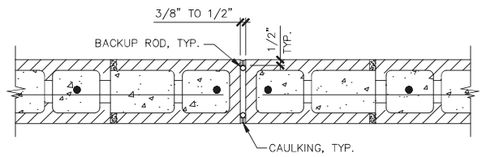

8" CMU WALL CONTROL JOINT

SCALE: NONE

3 GS-4

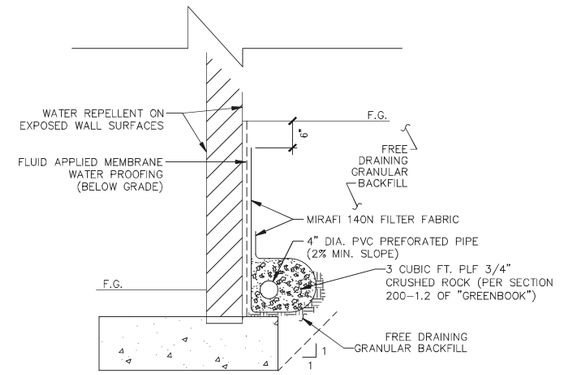

NOTE: THIS DETAIL APPLIES TO ALL MASONRY WALLS WHERE SOIL IS RETAINED.

TYPICAL WALL BACKFILL, DRAINAGE AND WATERPROOFING DETAIL

SCALE: NONE

4 GS-4

LINE IS 2 INCHES AT FULL SIZE
IF NOT 2" – SCALE ACCORDINGLY

Letter	Description	Date	Initial	Initial
	Revisions			Approved by:

BRADY
Water • Power • Transportation
10089 Willow Creek Rd., Suite 375
San Diego, California 92131
P: 858.496.0500 - www.richardbrady.com

REGISTERED PROFESSIONAL ENGINEER
KARL C. KUEBLER
No. 67975
CIVIL
STATE OF CALIFORNIA
08/28/2025

CITY OF REDLANDS
Municipal Utilities and Engineering Department

WATER FACILITIES GENERATORS
PROJECT No. 501028

CMU WALL SECTION AND DETAILS

GS-4

D-10117

Designed by: KCK
Date: 08/28/2025
Checked by: ADB
Date: 08/28/2025
Drawn by: CTM
Date: 08/28/2025
Checked by: ADB
Date: 08/28/2025

Reviewed By:
Gerard J. Nepomuceno, Civil Engineer, R.C.E. 93200 Date
Approved By:
Goutam K. Dobey, City Engineer, R.C.E. 75646 Date

Sheet 07 of 38 Sheets
Scale: Horiz. AS SHOWN
Vert. NONE

P:\WHB_South\REDLND\REDLND.006_Engineering and Design of Water Facilities Generators (No. 20230112WJ)\4_EngDesign\2_Dwgs\2-Stru\GS-4_CMU WALL SECTION AND DETAILS.dwg | Plotted: 8/28/2025

ELECTRICAL ABBREVIATIONS

A	AMBER, AMPERE, ALARM
AC	ALTERNATING CURRENT
AE	ANALYZER ELEMENT
AFF	ABOVE FINISHED FLOOR
AG	AGATE
AI	ANALOG INPUT
AIC	AVAILABLE INTERRUPTING CURRENT
AIT	ANALYZING INDICATING TRANSMITTER
AMP	AMPERES
AO	ANALOG OUTPUT
AR	ALARM RELAY
ARV	AIR RELIEF VALVE
ASC	AMPS SHORT CIRCUIT
ATS	AUTOMATIC TRANSFER SWITCH
AWG	AMERICAN WIRE GAGE
BLK	BLACK
BLU	BLUE
BC	BATTERY CHARGER
BFV	BUTTERFLY VALVE
BKR	BREAKER
BLDG	BUILDING
BP	BYPASS
BV	BALL VALVE
C	CLOSE, COUNTER, CONTACTOR OR CONDUIT
CAB	CABINET
CAP	CAPACITOR
CB	CIRCUIT BREAKER
CB "A"	CIRCUIT BREAKER AUXILIARY CONTACT (OPEN WHEN BREAKER IS OPEN OR TRIPPED, CLOSED WHEN BREAKER IS CLOSED)
CB "B"	CIRCUIT BREAKER AUXILIARY CONTACT (CLOSED WHEN BREAKER IS OPEN OR TRIPPED, OPEN WHEN BREAKER IS CLOSED)
CC	COUNTRY CLUB
CEC	CALIFORNIA ELECTRICAL CODE
CKT	CIRCUIT
CL	CENTERLINE
CLF	CURRENT LIMITING FUSE
CLK	CLOCK
C.O.	CONDUIT OPEN OR CONDUIT ONLY
COM	COMMUNICATIONS
COMM	COMMUNICATIONS
CONN	CONNECTION
CP	CONTROL PANEL
CPT	CONTROL POWER TRANSFORMER
CR	CURRENT OR CONTROL RELAY
CS	CONTROL STATION
CT	CYCLE TIMER OR CURRENT TRANSFORMER
CU	COPPER
CV	CHECK VALVE
2/C	2 CONDUCTOR
4"C	4" CONDUIT
D	DEEP
DEMEO	DEMOLITION
DC	DIRECT CURRENT
DI	DISCRETE INPUT OR DIGITAL INPUT
DIA	DIAMETER
DN	DOWN
DO	DISCRETE OUTPUT OR DIGITAL OUTPUT
DP	DIFFERENTIAL PRESSURE
DPDT	DOUBLE POLE DOUBLE THROW
DPST	DOUBLE POLE SINGLE THROW
DS	DISCONNECT SWITCH OR DOOR SWITCH
DWG	DRAWING
EC	EMPTY CONDUIT
EF2	EXHAUST FAN #
EL	ELEVATION OR EMERGENCY LIGHT
EMT	ELECTRICAL METALLIC TUBING
EO	ELECTRONICALLY OPERATED
EQUIP	EQUIPMENT EQUIP
ETM	ELAPSED TIME METER
EXIST	EXISTING
FA	FIFTH AVENUE
FAS	FLOOD ALARM SWITCH
FBO	FURNISHED BY OTHERS
FE	FLOW SENSOR
FF	FINISHED FLOOR
FL	FLOOR
FLA	FULL LOAD AMPERES
FIT	FLOW INDICATING TRANSMITTER
FNPT	FEMALE NATIONAL PIPE THREAD
FO	FIBER OPTIC
FS	FLOW SWITCH
FVNR	FULL VOLTAGE NON-REVERSING
FVR	FULL VOLTAGE REVERSING
G	GREEN OR GROUND
GFCI	GROUND FAULT CIRCUIT INTERRUPTER
GFI	GROUND FAULT INTERRUPTER
GND	GROUND
GV	GENERAL VALVE OR GATE VALVE
#8G	#8 GROUND WIRE
H	HIGH OR HUMIDISTAT
HDPE	HIGH-DENSITY POLYETHYLENE
HH	HANDHOLE
HMI	HUMAN MACHINE INTERFACE
HOA	HAND-OFF-AUTO
HOR	HAND-OFF-REMOTE
HP	HORSEPOWER
HPS	HIGH PRESSURE SODIUM
HS	HAND SWITCH
HV	HAND VALVE
HZ	HERTZ (CYCLES PER SECOND)
I/O	INPUT/OUTPUT
INST	INSTANTANEOUS
IS	INTRUSION SWITCH
J	JUNCTION BOX
JA	POWER ALARM
JB	JUNCTION BOX
JBOX	JUNCTION BOX
JY	POWER RELAY
K	KEY INTERLOCK
KV	KILOVOLT
KVA	KILOVOLT AMPERE
KW	KILOWATT
KWH	KILOWATT HOUR
L	LOW, LEVEL OR LONG
LC	LIGHTING CONTACTOR
LE	LEVEL ELEMENT
LIT	LEVEL TRANSMITTER
LOR	LOCAL-OFF-REMOTE
LS	LIMIT OR LEVEL SWITCH
LSH	LEVEL SWITCH HIGH
LSL	LEVEL SWITCH LOW
LT	LIGHT
LTG	LIGHTING
LTS	LIGHTS
M	MOTOR OR MAGNETIC MOTOR STARTER
MA	MILLIAMPERE
MAX	MAXIMUM
MCC	MOTOR CONTROL CENTER
MCM	THOUSAND CIRCULAR MIL
MCP	MOTOR CIRCUIT PROTECTORS
MFG	MANUFACTURING
MFR	MANUFACTURER
MH	MANHOLE OR MOUNTING HEIGHT
MIN	MINIMUM
MISC	MISCELLANEOUS
MNPT	MALE NATIONAL PIPE THREAD
MOM	MOMENTARY
MOV	MOTOR OPERATED VALVE
MS	MOTION SENSOR
MSB	MAIN SWITCHBOARD
MSH	MOTOR SPACE HEATER
MV	MILLIVOLT
N	NEUTRAL
NEU	NEUTRAL
NC	NORMALLY CLOSED
NEC	NATIONAL ELECTRICAL CODE
NEMA	NATIONAL ELECTRICAL MFG'S ASSOC.
NIC	NOT IN CONTRACT
NO	NORMALLY OPEN
NTS	NOT TO SCALE
O	OPEN
OH	OVERHEAD
OIT	OPERATOR INTERFACE TERMINAL
OL	OVERLOAD
P	PRIMARY OR POLE
P&ID	PIPING AND INSTRUMENTATION DIAGRAM
PB	PUSH BUTTON OR PULL BOX
PE	PRESSURE ELEMENT
PH	PHASE
PID	PROPORTIONAL-INTEGRAL-DERIVATIVE
PIT	PRESSURE INDICATING TRANSMITTER
PLC	PROGRAMMABLE LOGIC CONTROLLER
PNL	PANEL
POC	POINT OF CONNECTION
POT	POTENTIOMETER
PRI	PRIMARY
PRS	PRESSURE REDUCING STATION
PRV	PRESSURE REDUCING VALVE
PS	PRESSURE SWITCH
PSH	PRESSURE SWITCH HIGH
PVC	POLYVINYL CHLORIDE
PW	POTABLE WATER
2P	2 POLE
3P	3 POLE
QTY	QUANTITY
R	RED, RAISE, RELAY OR REVERSE
REC	RECEPTACLE
RGS	RIGID STEEL GALVANIZED CONDUIT
RSVR	RESERVOIR
RTU	REMOTE TERMINAL UNIT
R/W	RIGHT-OF-WAY
S2	SIZE 2 STARTER
SCADA	SUPERVISORY CONTROL AND DATA AQUISITION
SCE	SOUTHERN CALIFORNIA EDISON
SCH	SCHEDULE
SD	SMOKE DETECTOR
SEC	SECONDARY
SES	SERVICE ENTRANCE SECTION
SH	SPACE HEATER
SHC	SODIUM HYPOCHLORITE
SHLD	SHIELDED
SHT	SHEET
SM	SURFACE MOUNTED
SN	SOLID NEUTRAL
SP	SINGLE POLE
SPCP	SUMP PUMP CONTROL PANEL
SPDT	SINGLE POLE DOUBLE THROW
SPST	SINGLE POLE SINGLE THROW
SQ FT	SQUARE FEET
SS	SELECTOR SWITCH
STA	STATION
STD	STANDARD
SUPV	SUPERVISORY CONTROL
SV	SOLENOID VALVE
SW	SWITCH
T	THERMOSTAT, TIMER OR TOTALIZER
TB	TERMINAL BLOCK
TD	TIME DELAY RELAY
TEL	TELEPHONE
TEMP	TEMPERATURE
TQ	TORQUE
TS	TEXAS STREET
TSH	TEMPERATURE SWITCH HIGH
TSP	TWISTED SHIELDED PAIR
TTB	TELEPHONE TERMINAL BOX
TYP	TYPICAL
UG	UNDERGROUND
UL	UNDERWRITERS LABORATORY
UNO	UNLESS NOTED OTHERWISE
UPS	UNINTERRUPTIBLE POWER SUPPLY
UV	UNDER VOLTAGE
V	VOLTS
VA	VOLT AMPERE
VAC	ALTERNATING CURRENT VOLTAGE
VAR	VAR-METER OR VARIABLE
VDC	DIRECT CURRENT VOLTAGE
VLS	VALVE LIMIT SWITCH
VM	VOLTMETER
VPI	VALVE POSITION INDICATOR
VS	VOLTMETER SWITCH
W	WATTS OR WIDE
WH	WATTHOUR METER
WHT	WHITE
WP	WEATHERPROOF
X	AUXILIARY RELAY
XFMR	TRANSFORMER
XMTR	TRANSMITTER
Y	YELLOW
Z	AUXILIARY RELAY
ZS	POSITION SWITCH
ZSC	POSITION SWITCH CLOSED
ZSL	POSITION SWITCH LOW (I.E. INTRUSION SW)
ZSO	POSITION SWITCH OPEN
2-1#16TSP	TWO, SINGLE PAIR, TWISTED, SHIELDED #16 CABLE

LEGEND

SYMBOL	FEATURE
3-7/C#14	THREE, SINGLE, SEVEN CONDUCTOR #14, MULTICONDUCTOR CONTROL CABLES
	UNDERGROUND GROUND CABLE #4/0 SDBC UNLESS OTHERWISE NOTED
	GROUND ROD
	GROUND ROD AND GROUND WELL
	2', 4', OR 8' STRIP
	LUMINAIRE WALL MOUNTED
	DUPLEX RECEPTACLE
LTG PNL	LIGHTING PANEL
	LOW VOLTAGE CIRCUIT BREAKER
M	MOTOR
	DISCONNECT SWITCH
	TRANSFORMER
	EXPOSED CONDUIT
OR	BREAK AND CONTINUATION IN CONDUIT RUN
	UNDERGROUND CONDUIT, DIRECT BURIED OR IN DUCTBANK
	CONDUIT IN SLAB
	CONDUIT CAP
J	JUNCTION BOX
H	HANDHOLE
P	PULL BOX
	CONDUIT RUN - CHANGE IN ELEVATION (UP)
	CONDUIT RUN - CHANGE IN ELEVATION (DOWN)

SECTION AND DETAIL KEY

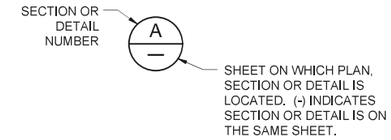

SYMBOL WHERE THERE IS A DETAIL

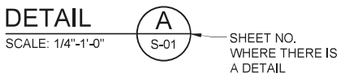

SYMBOL WHERE DETAIL IS DRAWN

DETAIL SYMBOL

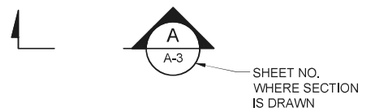

SYMBOL WHERE THERE IS A SECTION



SYMBOL WHERE SECTION IS DRAWN

SECTION SYMBOL

LINE IS 2 INCHES AT FULL SIZE
IF NOT 2" – SCALE ACCORDINGLY

BRADY
Water • Power • Transportation
10089 Willow Creek Rd., Suite 375
San Diego, California 92131
P: 858.496.0500 - www.richardbrady.com

REGISTERED PROFESSIONAL ENGINEER RYAN S. NISHIMURA No. 20050 ELECTRICAL STATE OF CALIFORNIA

08/28/2025

Letter	Description	Date	Initial	Initial
	Revisions		Approved by:	

CITY OF REDLANDS
Municipal Utilities and Engineering Department

WATER FACILITIES GENERATORS
PROJECT No. 501028

ELECTRICAL ABBREVIATIONS, LEGEND AND SYMBOLS

GE-1

D-10117

Designed by: CCW	Reviewed By:
Date: 08/28/2025	Gerard J. Nepomuceno, Civil Engineer, R.C.E. 93200 Date
Checked by: RSN	Approved By:
Date: 08/28/2025	Goutam K. Dobey, City Engineer, R.C.E. 75646 Date
Drawn by: CCW	Sheet 08 of 38 Sheets
Date: 08/28/2025	Scale: Horiz. AS SHOWN
Checked by: RSN	Vert. NONE
Date: 08/28/2025	

P:\VHB_South\REDLND\REDLND.006_Engineering and Design of Water Facilities Generators (No. 20230112\2M)\4_EngDesign\2_Dwgs\1-Gen\GE-1_ELEC_AbbrvLegend.dwg | Plotted: 8/28/2025

ELECTRICAL GENERAL NOTES

1. THIS IS A GENERAL LEGEND SHEET. SOME SYMBOLS AND ABBREVIATIONS MAY NOT BE UTILIZED ON THIS SPECIFIC PROJECT.
2. SOLID LINES (————) INDICATE NEW WORK OR EQUIPMENT.
3. SCREENED LINES (————) INDICATE EXISTING WORK OR EQUIPMENT.
4. DASHED LINES (– – – – –) INDICATE CONCEALED CONDUITS, OR FUTURE WORK OR EQUIPMENT WHEN SO NOTED.
5. LIGHTING AND RECEPTACLE CIRCUITS SHOWN ON THE PLANS ARE NOT SHOWN ON THE ONE-LINE DIAGRAMS.
6. THE WORK IN THE ELECTRICAL DRAWINGS IS TO SOME EXTENT DIAGRAMMATIC. EXACT RACEWAY ROUTING AND TERMINATION MUST BE DETERMINED AT THE JOB SITE TO SUIT FIELD CONDITIONS, THE WORK OF OTHER TRADES AND THE REQUIREMENTS OF APPROVED SHOP DRAWINGS.
7. ALL EQUIPMENT DIMENSIONS SHOWN ON PLANS AND ELEVATIONS ARE APPROXIMATE ONLY. THE CONTRACTOR SHALL USE THE SHOP DRAWINGS FOR PROPER LAYOUT, FOUNDATION AND PAD LOCATIONS, ETC. FOR FINAL INSTALLATION.
8. IN CASE OF INTERFERENCE BETWEEN ELECTRICAL EQUIPMENT SHOWN ON THE DRAWINGS AND OTHER INSTALLED EQUIPMENT, THE CONTRACTOR SHALL NOTIFY THE ENGINEER IN WRITING AND THE ENGINEER SHALL REVIEW THE PROPOSED CHANGES BEFORE THEY ARE MADE.
9. LOCATION OF MANHOLES, PULLBOXES AND JUNCTION BOXES ARE APPROXIMATE. CONTRACTOR SHALL COORDINATE EXACT LOCATION OF MANHOLES, PULLBOXES AND JUNCTION BOXES WITH MECHANICAL AND CIVIL WORK.
10. CONTRACTOR SHALL PROVIDE ADDITIONAL MANHOLES, PULLBOXES OR JUNCTION BOXES TO THOSE SHOWN WHERE THEY ARE REQUIRED TO MAKE A WORKABLE INSTALLATION IN ACCORDANCE WITH ALL THE LATEST EDITION OF THE CALIFORNIA ELECTRICAL CODE.
11. CONTRACTOR SHALL PROVIDE REDLINE MARKUPS FOR AS-BUILT CONDUIT ROUTING.
12. SEPARATE CONDUITS, PULLBOXES AND JUNCTION BOXES SHALL BE PROVIDED FOR EACH WIRE/CABLE TYPE. EXAMPLES OF WIRE/CABLE TYPES INCLUDE BUT ARE NOT LIMITED TO 24VDC POWER, 208/120VAC POWER, 480/277VAC POWER, DISCRETE CONTROL WIRING, ANALOG SIGNALS, ETHERNET COMMUNICATIONS AND FIBER COMMUNICATIONS.

ELECTRICAL GENERAL REQUIREMENTS

1. THE CONTRACTOR SHALL BE RESPONSIBLE FOR ROUTING ALL CONDUITS NOT SHOWN ON THE PLANS. THIS SHALL INCLUDE ALL CONDUITS SHOWN ON THE ONE-LINES AND HOME-RUNS SHOWN ON THE PLAN DRAWINGS. CONDUITS SHALL BE ROUTED AS DEFINED IN THE SPECIFICATIONS.
2. SPARE WIRES SHALL BE TAPED AND COILED.
3. IF EQUIPMENT SUPPLIED BY MANUFACTURER HAS A LARGER LOAD THAN VALUE SHOWN, THE CABLE, CONDUIT AND ELECTRICAL EQUIPMENT SHALL BE ENLARGED, AS REQUIRED, TO ACCOMMODATE THE HIGHER VALUE.
4. THE CONTRACTOR SHALL BE RESPONSIBLE FOR FURNISHING PROPERLY SIZED STARTER OVERLOADS FOR EQUIPMENT FURNISHED.
5. IN AREAS WHERE THERE ARE OVERHEAD BRIDGE CRANES, HOISTS, ETC., NO CONDUITS SHALL BE RUN OVERHEAD THAT WILL INTERFERE WITH THE OPERATION OF THE EQUIPMENT.
6. RACEWAY IS 3/4" IF NOT NOTED AND CONTAINS TWO NO. 12 CONDUCTORS.
7. LIQUID - TIGHT FLEXIBLE CONDUIT SHALL BE INSTALLED WITH GROUNDING FITTINGS TO DEVICES WHICH REQUIRE FLEXIBLE CONNECTION. FLEXIBLE CONDUIT LARGER THAN 2" SHALL BE INSTALLED IN LENGTHS THAT DO NOT EXCEED 30". SMALLER CONDUITS SHALL NOT BE INSTALLED IN LENGTHS THAT EXCEED 18".
8. ALL RACEWAY PENETRATIONS TO STRUCTURES THAT ARE BELOW GROUND LEVEL SHALL BE WATERTIGHT. THE RACEWAYS SHALL BE ARRANGED SO THAT WATER THAT MAY FIND ITS WAY THROUGH THE RACEWAY SHALL DRAIN AWAY FROM THE INSTRUMENTS, PANELS OR ANY ELECTRICAL COMPONENTS, THAT THE RACEWAY IS INTENDED TO CONNECT.
9. THE CONTRACTOR SHALL VERIFY EXACT LOCATION OF TERMINAL BOXES AND CONDUIT ENTRANCES OF ALL EQUIPMENT AGAINST SHOP DRAWINGS BEFORE STUBBING UP CONDUITS.
10. CONDUITS TERMINATING AT SWITCHBOARD, MOTOR CONTROL CENTER, POWER AND LIGHTING PANEL, CONTROL CABINET, ETC. SHALL BE EQUIPPED WITH SEALING HUB AND GROUNDING BUSHING, AND SHALL BE GROUNDED WITH NO. 6 GROUND WIRE.
11. INSTALL EXPANSION FITTINGS EVERY 200 FEET OF STRAIGHT RUN OF CONDUITS.
12. CONDUIT CROSSING BUILDING OR STRUCTURAL EXPANSION JOINTS SHALL BE PROVIDED WITH SUITABLE EXPANSION FITTINGS. THESE FITTINGS MUST BE CONSTRUCTED IN SUCH A MANNER THAT WILL INSURE THE CONTINUITY OF THE GROUND PATH IN EACH CONDUIT OR RACEWAY.
13. ALL UNDERGROUND CONDUIT RUNS SHALL HAVE LONG RADIUS SWEEP BENDS WITH A MINIMUM BENDING RADIUS OF 12 TIMES NOMINAL DIAMETER OF THE CONDUIT.
14. ALL UNDERGROUND CONDUITS NOT ENCASED IN CONCRETE SHALL BE RIGID STEEL, GALVANIZED, PVC COATED.
15. THE MINIMUM SIZE OF CONDUITS INSTALLED BELOW GRADE SHALL BE 1 INCH.
16. ALL METALLIC STRUCTURES, METALLIC ENCLOSURES, AND ELECTRICAL EQUIPMENT, SUCH AS STRUCTURAL STEEL, METALLIC RACEWAY, FENCE, STAIR HANDRAILS, TANKS, VESSELS, PANELS, SWITCHING EQUIPMENT, EQUIPMENT ENCLOSURES AND CABINETS, MOTORS, TRANSFORMERS, SWITCHGEAR, ETC. SHALL BE PERMANENTLY AND EFFECTIVELY GROUNDED AND GROUND CONNECTION SHALL BE MADE TO THE AREA GROUND GRID. THE GROUND CONDUCTOR SHALL BE SIZED PER N.E.C.
17. ALL FREE STANDING PANELS OR CABINETS SHALL BE SET ON A CONCRETE PAD AND LEVELING CHANNELS SHALL BE EMBEDDED INTO THE PAD.
18. ALL RECEPTACLES SHALL BE MOUNTED 24" ABOVE FLOOR SURFACE, UNLESS OTHERWISE NOTED.
19. ALL OUTDOOR AND ANTICIPATED WET AREA RECEPTACLES SHALL BE GROUND FAULT INTERRUPTER RECEPTACLES.
20. ALL OUTDOOR DEVICES SHALL BE WEATHERPROOF TYPE.
21. THE CONTRACTOR SHALL NOT REUSE EXISTING CONDUIT AND WIRE UNLESS OTHERWISE NOTED.
22. ALL ELECTRICAL EQUIPMENT SHALL BE MOUNTED WITH STAINLESS STEEL ADHESIVE ANCHORED WITH NO EXCEPTIONS.
23. ALL UNDERGROUND CONDUIT UNDER DRIVABLE AREAS SHALL BE ENCASED IN REINFORCED CONCRETE.

LINE IS 2 INCHES AT FULL SIZE
IF NOT 2" – SCALE ACCORDINGLY

BRADY
Water • Power • Transportation
10089 Willow Creek Rd., Suite 375
San Diego, California 92131
P: 858.496.0500 - www.richardbrady.com

REGISTERED PROFESSIONAL ENGINEER
RYAN S. NISHIMURA
No. 20050
ELECTRICAL
STATE OF CALIFORNIA
08/28/2025

Letter	Description	Date	Initial	Initial
	Revisions			Approved by:

CITY OF REDLANDS
Municipal Utilities and Engineering Department

WATER FACILITIES GENERATORS
PROJECT No. 501028

ELECTRICAL GENERAL NOTES

GE-2

Designed by: CCW Date: 08/28/2025
Checked by: RSN Date: 08/28/2025
Drawn by: CCW Date: 08/28/2025
Checked by: RSN Date: 08/28/2025

Reviewed By: Gerard J. Nepomuceno, Civil Engineer, R.C.E. 93200 Date
Approved By: Goutam K. Dobey, City Engineer, R.C.E. 75646 Date

Sheet 09 of 38 Sheets
Scale: Horiz. AS SHOWN
Vert. NONE

D-10117

P:\WHB_South\REDLND\REDLND.006_Engineering and Design of Water Facilities Generators (No. 20230112VM)\4_EngDesign\2_Dwgs\1-Gen\GE-2_ELEC_GeneralNotes.dwg | Plotted: 8/28/2025

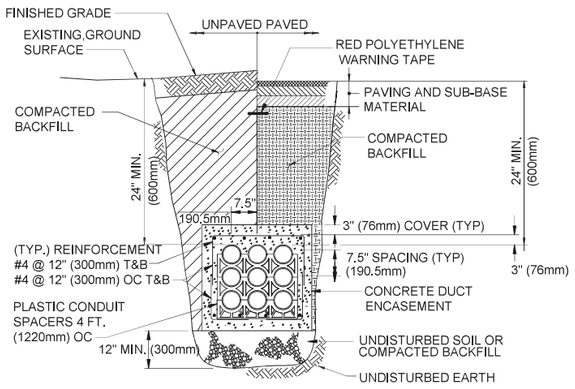

NOTE:

PROVIDE STEEL REINFORCEMENT WHERE REQUIRED FOR TRAFFIC ROADWAY CROSSING (PRIMARY ROADS) AS WELL AS (1) BELOW STRUCTURES AND (2) MIN 3 FT LENGTH AT ENTRY TO MH, HH, AND FOUNDATIONS. EXCEPTION IS INDIVIDUAL CONCRETE ENCASEMENTS.

UNDERGROUND DUCT BANK - CONCRETE ENCASED

UNDERGROUND DUCT BANK

SCALE: NONE

1

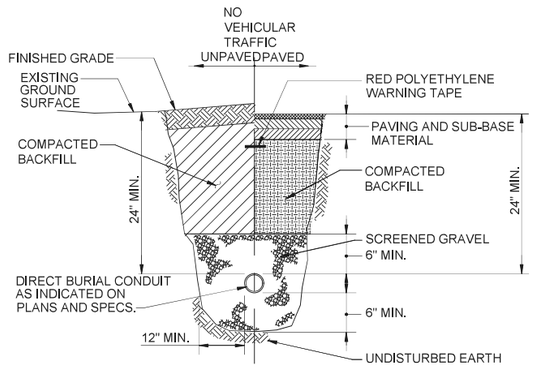

TYPICAL DIRECT BURIAL CONDUIT INSTALLATION

DIRECT BURIAL CONDUIT

SCALE: NONE

2

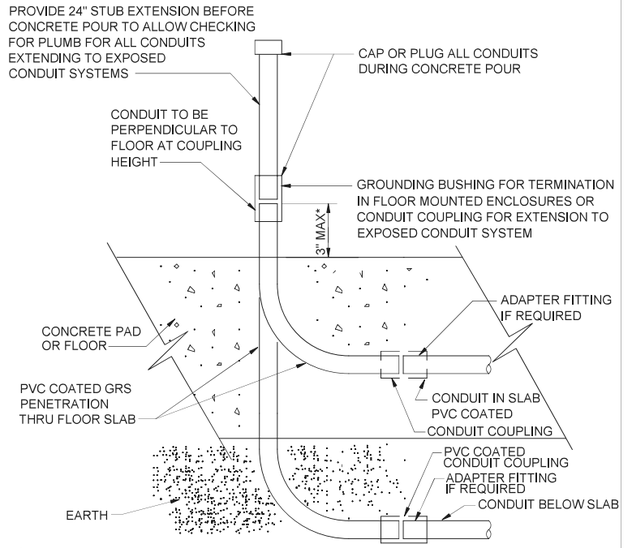

NOTE:
APPLICABLE IN ALL AREAS UNLESS NOTED OTHERWISE
* = 3" SHALL BE MEASURED FROM TOP OF EQUIPMENT PAD IF APPLICABLE, EXCEPT WHERE THIS INTERFERES WITH THE EQUIPMENT MANUFACTURER'S INSTALLATION INSTRUCTION. REFER TO SPECIFICATION SECTION 16110.

CONDUIT STUB UP / FLOOR PENETRATION

CONDUIT STUB UP PENETRATION

SCALE: NONE

3

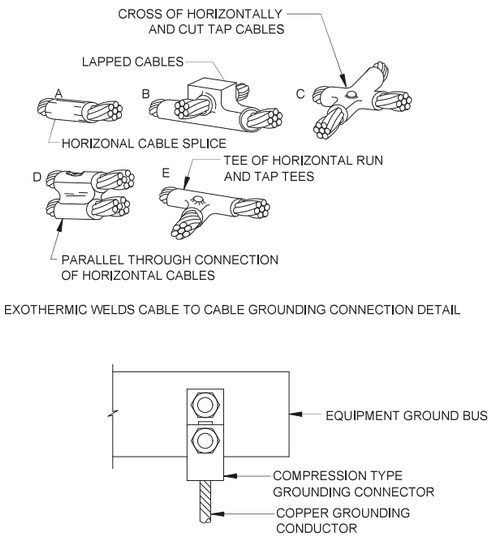

EXOTHERMIC WELDS CABLE TO CABLE GROUNDING CONNECTION DETAIL

TYPICAL GROUND BUS CONNECTION

MISCELLANEOUS GROUNDING

SCALE: NONE

4

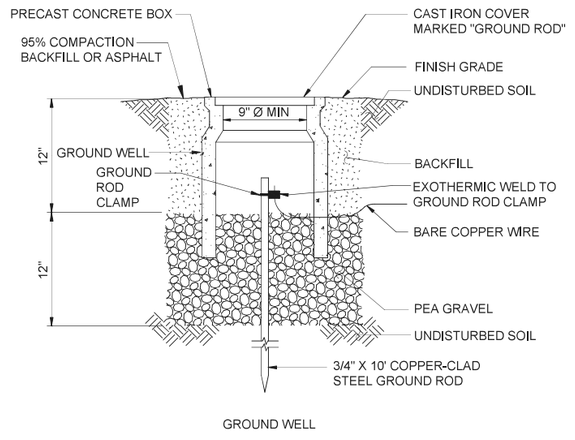

GROUND WELL

GROUND WELL

SCALE: NONE

5

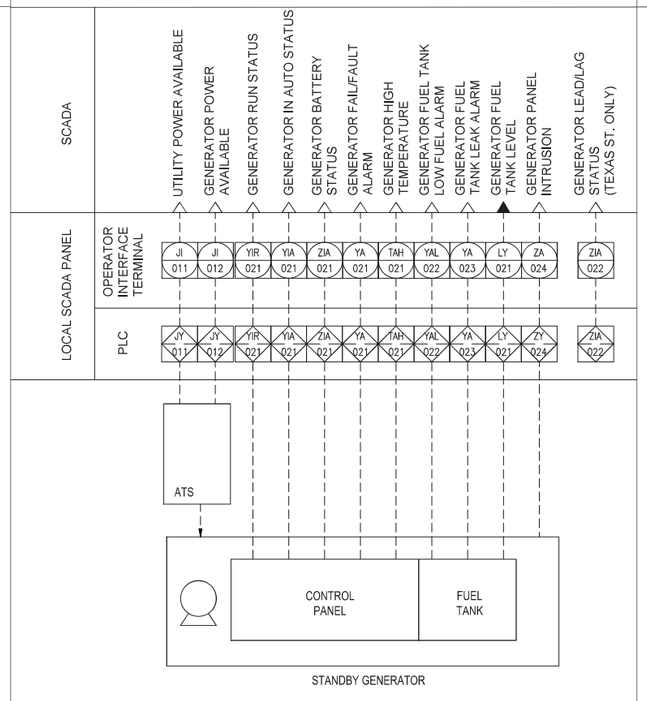

STANDBY GENERATOR

TYPICAL GENERATOR I/O DIAGRAM

SCALE: NONE

6

LINE IS 2 INCHES AT FULL SIZE
IF NOT 2" – SCALE ACCORDINGLY

Letter	Description	Date	Initial	Initial
	Revisions			Approved by:

BRADY
Water • Power • Transportation
10089 Willow Creek Rd., Suite 375
San Diego, California 92131
P: 858.496.0500 - www.richardbrady.com

REGISTERED PROFESSIONAL ENGINEER RYAN S. NISHIMURA No. 20050 ELECTRICAL STATE OF CALIFORNIA

08/28/2025

CITY OF REDLANDS
Municipal Utilities and Engineering Department

WATER FACILITIES GENERATORS
PROJECT No. 501028

ELECTRICAL DETAILS

GE-3

D-10117

Designed by:	CCW	Reviewed By:	
Date:	08/28/2025		Gerard J. Nepomuceno, Civil Engineer, R.C.E. 93200 Date
Checked by:	RSN	Approved By:	
Date:	08/28/2025		Goutam K. Dobey, City Engineer, R.C.E. 75646 Date
Drawn by:	CCW	Sheet	10 of 38 Sheets
Date:	08/28/2025	Scale:	Horiz. AS SHOWN
Checked by:	RSN		Vert. NONE
Date:	08/28/2025		

P:\WHB_South\REDLND\REDLND.006_Engineering and Design of Water Facilities Generators (No. 20230112VM)\4_EngDesign\2_Dwgs\1-Gen\GE-3_ELEC_Details.dwg | Plotted: 8/28/2025

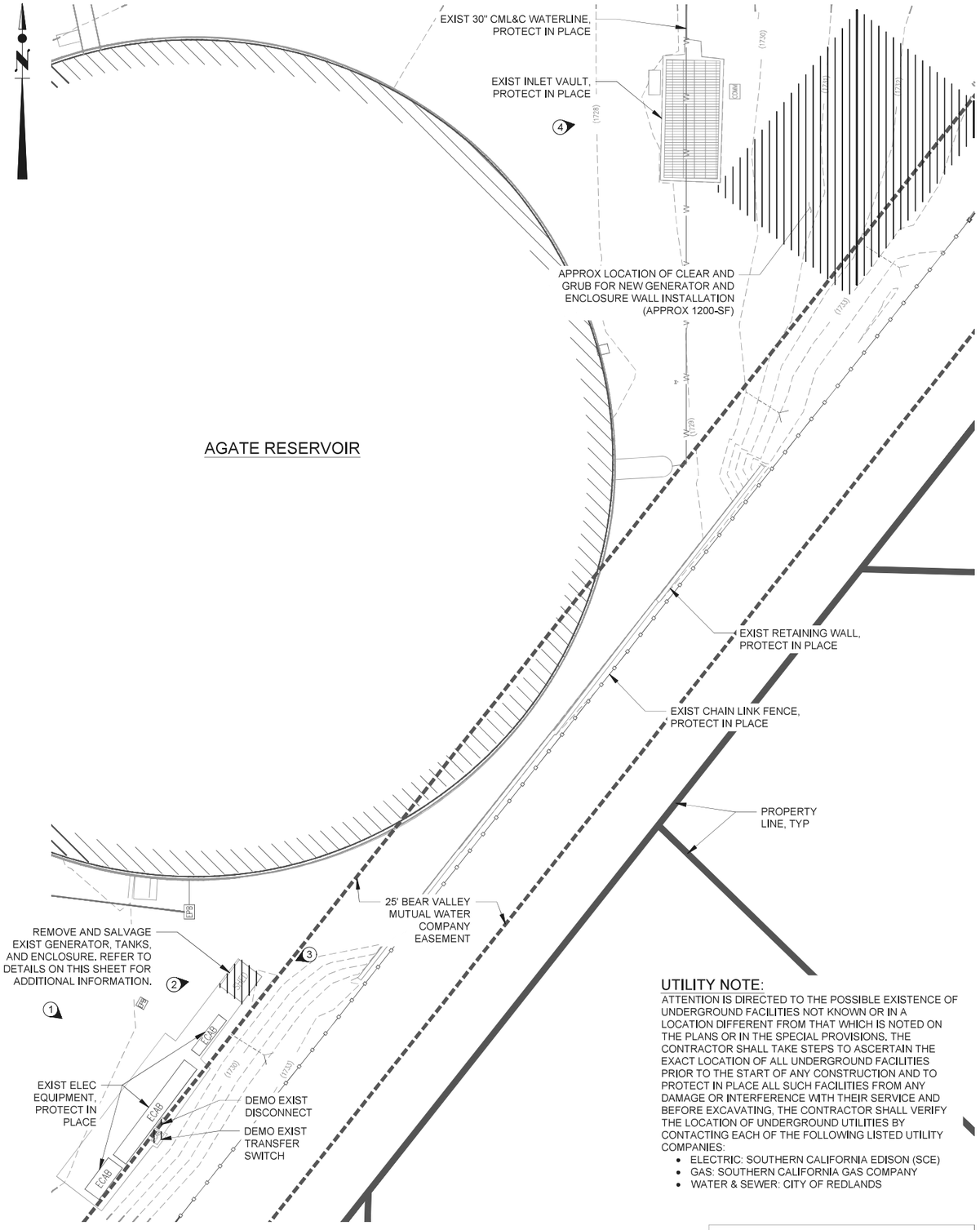

SITE DEMO PLAN

SCALE : 1" = 10'-0"

UTILITY NOTE:

ATTENTION IS DIRECTED TO THE POSSIBLE EXISTENCE OF UNDERGROUND FACILITIES NOT KNOWN OR IN A LOCATION DIFFERENT FROM THAT WHICH IS NOTED ON THE PLANS OR IN THE SPECIAL PROVISIONS. THE CONTRACTOR SHALL TAKE STEPS TO ASCERTAIN THE EXACT LOCATION OF ALL UNDERGROUND FACILITIES PRIOR TO THE START OF ANY CONSTRUCTION AND TO PROTECT IN PLACE ALL SUCH FACILITIES FROM ANY DAMAGE OR INTERFERENCE WITH THEIR SERVICE AND BEFORE EXCAVATING, THE CONTRACTOR SHALL VERIFY THE LOCATION OF UNDERGROUND UTILITIES BY CONTACTING EACH OF THE FOLLOWING LISTED UTILITY COMPANIES:

- ELECTRIC: SOUTHERN CALIFORNIA EDISON (SCE)
- GAS: SOUTHERN CALIFORNIA GAS COMPANY
- WATER & SEWER: CITY OF REDLANDS

LEGEND

3 PHOTO NUMBER, SEE DETAILS

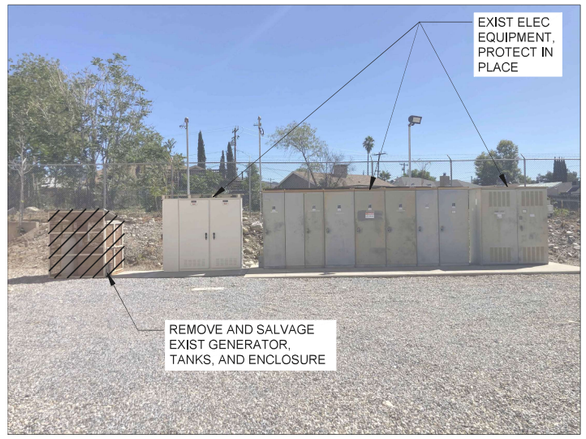

ELECTRICAL PANELS (SOUTHEAST) 1

SCALE: NONE



ENCLOSURE (EAST) 2

SCALE: NONE

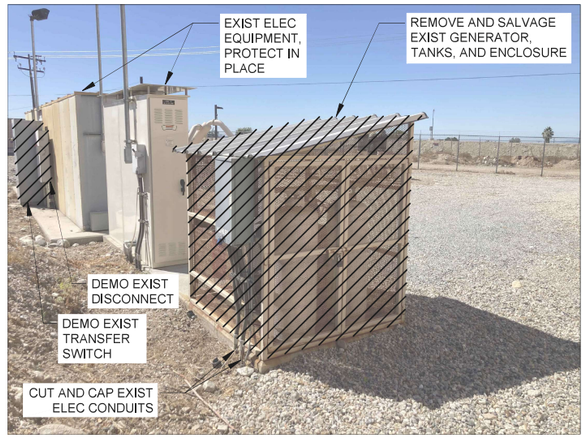

ENCLOSURE (WEST) 3

SCALE: NONE

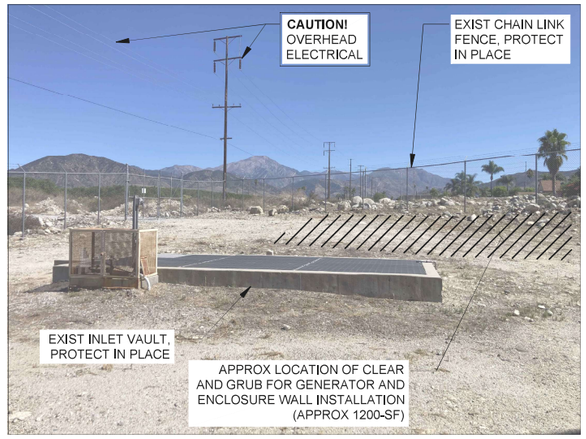

INLET VAULT STRUCTURE (EAST) 4

SCALE: NONE

BRADY
Water • Power • Transportation
10089 Willow Creek Rd., Suite 375
San Diego, California 92131
P: 858.496.0500 - www.richardbrady.com

REGISTERED PROFESSIONAL ENGINEER GARRETT D. MUNKWITZ C 90365 CIVIL STATE OF CALIFORNIA

08/28/2025

Letter	Description	Date	Initial	Initial
	Revisions			Approved by:

LINE IS 2 INCHES AT FULL SIZE
IF NOT 2" – SCALE ACCORDINGLY

CITY OF REDLANDS
Municipal Utilities and Engineering Department

WATER FACILITIES GENERATORS
PROJECT No. 501028

SITE DEMO PLAN AND DETAILS

AG-D-1

D-10117

Designed by:	GDM	Reviewed By:	
Date:	08/28/2025	Gerard J. Nepomuceno, Civil Engineer, R.C.E. 93200	Date
Checked by:	KCK	Approved By:	
Date:	08/28/2025	Goutam K. Dobey, City Engineer, R.C.E. 75646	Date
Drawn by:	GDM	Sheet 11 of 38 Sheets	
Date:	08/28/2025	Scale: Horiz. AS SHOWN	
Checked by:	KCK	Vert. NONE	
Date:	08/28/2025		

P:\WHB_South\REDLND\REDLND.006_Engineering and Design of Water Facilities Generators (No. 20230112VM)\4_EngDesign\2_Dwgs\4-Agate PS\AG-D-1 SITE DEMO PLAN.dwg | Plotted: 8/28/2025

I CERTIFY THAT THIS TOPOGRAPHIC SURVEY OF APN: 0167-17-101, LOCATED IN THE CITY OF REDLANDS, CALIFORNIA, WAS COMPLETED BY ME, OR UNDER MY DIRECT SUPERVISION, DURING JUNE 2023.

PROFESSIONAL LAND SURVEYOR · RUEL DEL CASTILLO · P.L.S. 4212 · STATE OF CALIFORNIA

RUEL DEL CASTILLO — 7/6/2023
CALIFORNIA P.L.S. 4212 — DATE

NOTE:
COORDINATES SHOWN ARE BASED ON THE CALIFORNIA COORDINATE SYSTEM (CCS83) ZONE VI, 1983 NAD (2017.50 EPOCH)

BEARINGS ARE BASED ON THE BEARING BETWEEN CALIFORNIA SPATIAL REFERENCE CENTER CONTINUOUS GPS STATIONS "CRFF" TO "RTHS" BEING N76°05'46"W

ELEVATIONS ARE BASED ON RIVERSIDE COUNTY BENCH MARK "A 296 RESET". DESCRIBED AS "AT MENTONE, ALONG MENTONE BOULEVARD, AT MILEPOLE 12, 62.0 FEET EAST OF AND ACROSS THE TRACK FROM THE SOUTHEAST CORNER OF THE ATCHISON, TOPEKA AND SANTA FE RAILWAY STATION, 20.3 FEET EAST OF THE NORTHWEST CORNER OF A LARGE WAREHOUSE, IN THE TOP OF THE EAST END OF THE BOTTOM CONCRETE STEP, 25.9 FEET EAST OF THE EAST RAIL OF A SIDE TRACK, 7.8 FEET NORTH OF THE EAST EDGE OF A DOOR TO THE WAREHOUSE, ABOUT 1/2 FOOT HIGHER THAN AN ENTRANCE WALK, AND ABOUT 2 1/2 FEET HIGHER THAN THE RAILROAD."
ELEV.= 1653.10 FEET (NAVD 88)

DATE OF SURVEY: JUNE, 2023

LEGEND
-ELEC. PULLBOX
-FENCE
-IRR CONTROL VALVE
-WATER METER
-WATER VALVE
-UNKNOWN RISER

0 20 40 Feet
SCALE: 1" = 20'

FD 1" IP "RCE 859" NO REF
40
1
N 88°26'47" W 328.24'
N 88°26'47" W 295.24'
℄ SAN BERNARDINO AVE
27
28
29
30
34
33
32
31
25
T.R. 2869
M.B. 39/61-72
NE'LY 10 FEET PORTION LOT 19 T.R. 2569 M.B. 36/72
10
25
N 36° 21' 35" E 492.80'
LOT 20 T.R. 2569 M.B. 36/72
RESERVOIR TANK
BEAR VALLEY CHANNEL
℄ SALERNO AVE
FD 1" IP "LS 2851" NO REF
FD 1" IP "SBCO SURV" NO REF
N 01°33'10" E 394.57'
N 01°33'10" E 576.23'
℄ AGATE AVE
FD 1" IP "LS 2851" NO REF
CHAIN LINK FENCE
GATE
STONE
CONCRETE BLOCK WALL
ELEC. PANEL
ATTC. PANEL
CC PAD
GRATE
DROP INLET ON CC PAD
WATER VAULT WITH LID
WATER VALVES ON CC PAD (TYP)
TRANSFORMER
ELEC. PULLBOX ON MANHOLE
CP TEST
COMBINED SPACE
GDM
BRTU
42" PIPE
15" PIPE
36" PIPE
12" VERTICAL PIPE
12" PIPE
20" PIPE
8" PIPE
17" PIPE

LINE IS 2 INCHES AT FULL SIZE
IF NOT 2" – SCALE ACCORDINGLY

Letter	Description	Date	Initial	Initial
	Revisions			Approved by:

08/28/2025

BRADY
Water • Power • Transportation
10089 Willow Creek Rd., Suite 375
San Diego, California 92131
P: 858.496.0500 - www.richardbrady.com

CITY OF REDLANDS
Municipal Utilities and Engineering Department

WATER FACILITIES GENERATORS
PROJECT No. 501028

EXISTING CONDITIONS SURVEY

AG-C-1

Designed by: RDC Date: 08/28/2025
Checked by: KCK Date: 08/28/2025
Drawn by: GDM Date: 08/28/2025
Checked by: KCK Date: 08/28/2025

Reviewed By: Gerard J. Nepomuceno, Civil Engineer, R.C.E. 93200 Date
Approved By: Goutam K. Dobey, City Engineer, R.C.E. 75646 Date

Sheet 12 of 38 Sheets
Scale: Horiz. AS SHOWN
Vert. NONE

D-10117

P:\WHB_South\REDLND\REDLND.006_Engineering and Design of Water Facilities Generators (No. 20230112WM)\4_EngDesign\2_Dwgs\4-Agate PS\AG-C-1 EXISTING CONDITIONS SURVEY.dwg | Plotted: 8/28/2025

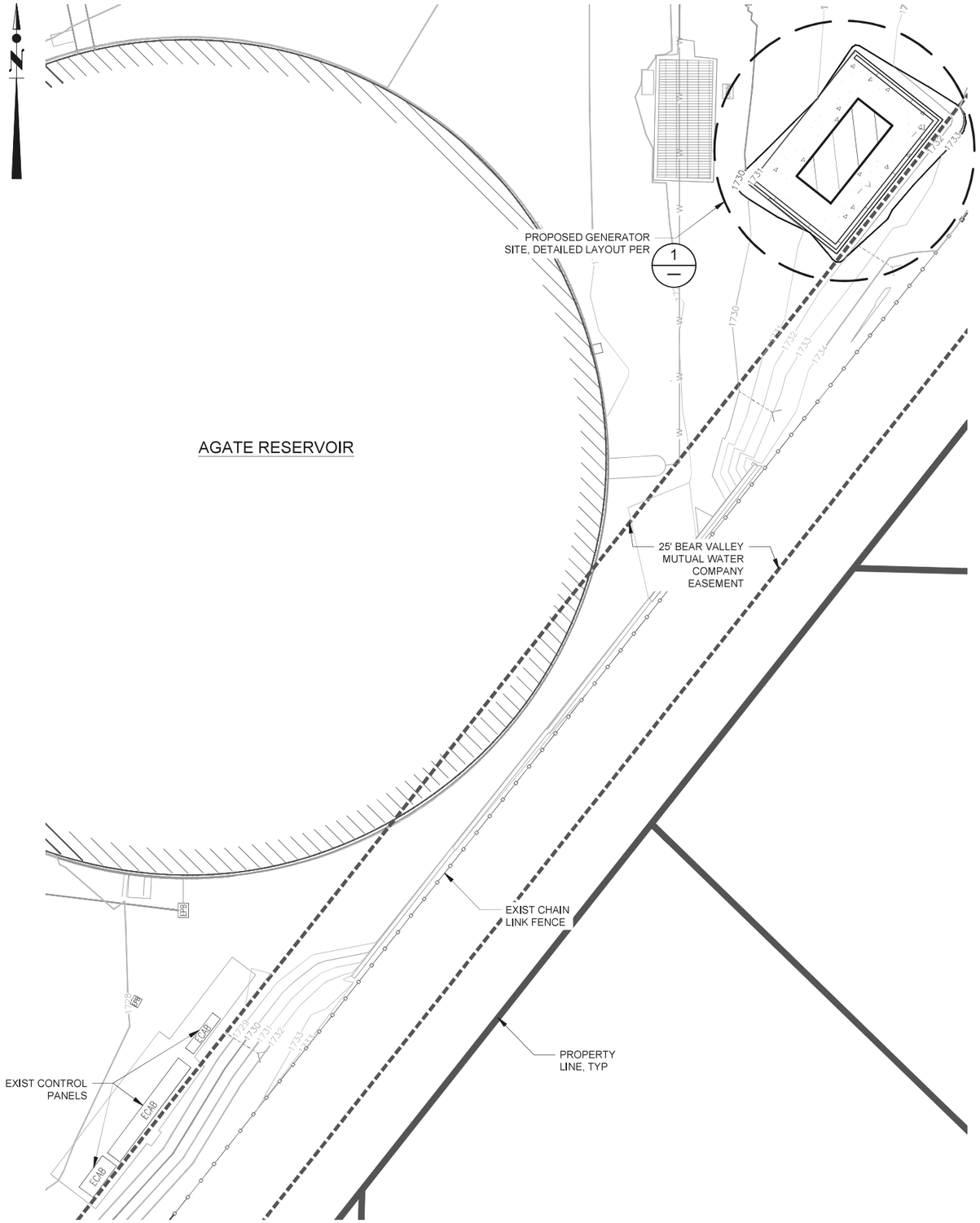

OVERALL SITE PLAN

SCALE : 1" = 10'-0"

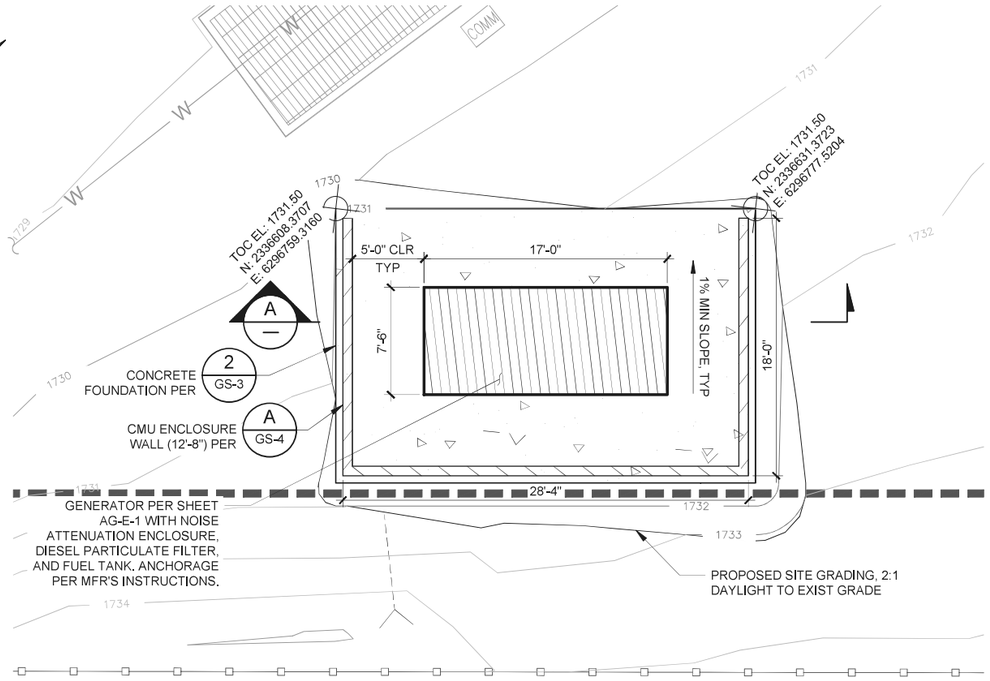

IMPROVEMENT PLAN

1/— SCALE:1" = 5'-0"

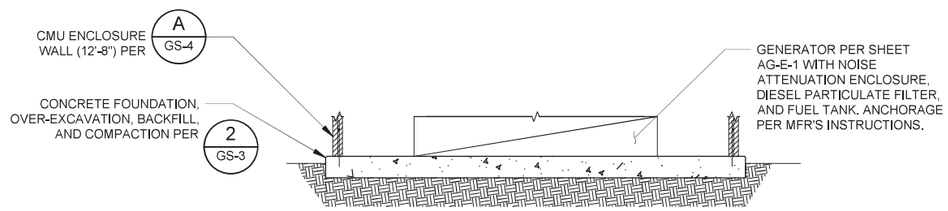

IMPROVEMENT SECTION

A/— SCALE:1" = 5'-0"

NOTES:

1. CONTRACTOR SHALL SUBMIT GENERATOR ANCHORAGE DESIGN AND SEISMIC CALCULATIONS STAMPED BY A CALIFORNIA LICENSED PROFESSIONAL ENGINEER FOR APPROVAL BY EOR.
2. REFER TO SHEET AG-E-1 FOR ELECTRICAL SCOPE OF WORK.

LINE IS 2 INCHES AT FULL SIZE
IF NOT 2" – SCALE ACCORDINGLY

Letter	Description	Date	Initial	Initial
	Revisions			Approved by:

BRADY
Water • Power • Transportation
10089 Willow Creek Rd., Suite 375
San Diego, California 92131
P: 858.496.0500 - www.richardbrady.com

REGISTERED PROFESSIONAL ENGINEER GARRETT D. MURAWSKY C 90365 CIVIL STATE OF CALIFORNIA
08/28/2025

CITY OF REDLANDS
Municipal Utilities and Engineering Department

WATER FACILITIES GENERATORS
PROJECT No. 501028

OVERALL SITE PLAN

AG-C-2

Designed by: GDM Date: 08/28/2025
Checked by: KCK Date: 08/28/2025
Drawn by: GDM Date: 08/28/2025
Checked by: KCK Date: 08/28/2025

Reviewed By: Gerard J. Nepomuceno, Civil Engineer, R.C.E. 93200 Date
Approved By: Goutam K. Dobey, City Engineer, R.C.E. 75646 Date

Sheet 13 of 38 Sheets
Scale: Horiz. AS SHOWN
Vert. NONE

D-10117

P:\WHB_South\REDLND\REDLND.006_Engineering and Design of Water Facilities Generators (No. 20230112WM)\4_EngDesign\2_Dwgs\4-Agate PS\AG-C-2 OVERALL SITE PLAN.dwg | Plotted: 8/28/2025

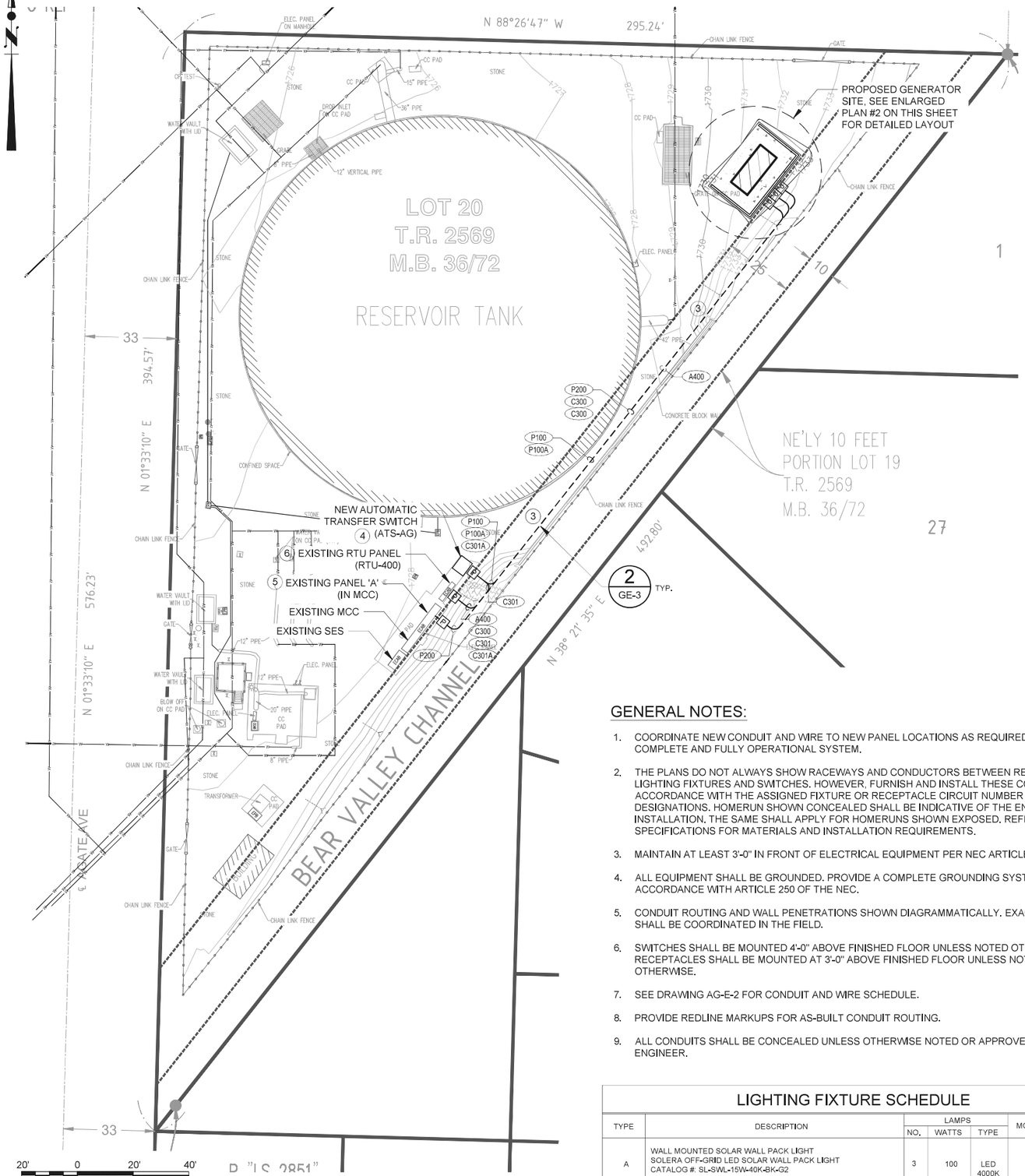

OVERALL ELECTRICAL SITE PLAN 1

SCALE:1" = 20'-0"

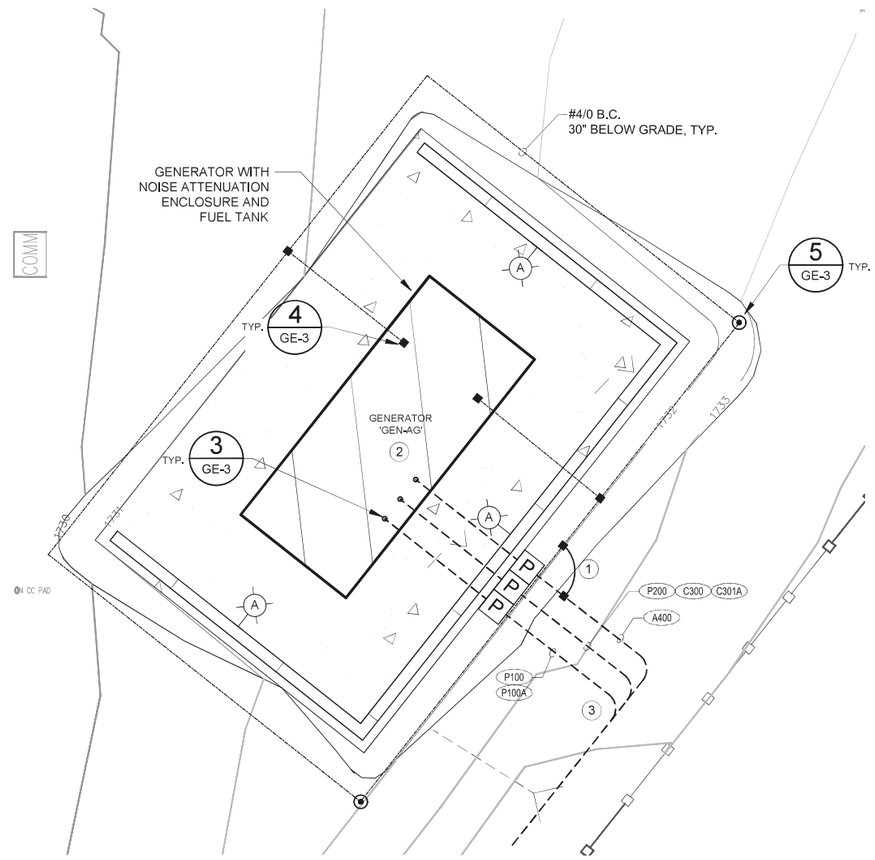

ENLARGED ELECTRICAL SITE PLAN 2

SCALE:1" = 4'-0"

GENERAL NOTES:

1. COORDINATE NEW CONDUIT AND WIRE TO NEW PANEL LOCATIONS AS REQUIRED FOR A COMPLETE AND FULLY OPERATIONAL SYSTEM.
2. THE PLANS DO NOT ALWAYS SHOW RACEWAYS AND CONDUCTORS BETWEEN RECEPTACLES, LIGHTING FIXTURES AND SWITCHES. HOWEVER, FURNISH AND INSTALL THESE CONNECTIONS IN ACCORDANCE WITH THE ASSIGNED FIXTURE OR RECEPTACLE CIRCUIT NUMBER AND SWITCH DESIGNATIONS. HOMERUN SHOWN CONCEALED SHALL BE INDICATIVE OF THE ENTIRE CIRCUIT INSTALLATION. THE SAME SHALL APPLY FOR HOMERUNS SHOWN EXPOSED. REFER TO SPECIFICATIONS FOR MATERIALS AND INSTALLATION REQUIREMENTS.
3. MAINTAIN AT LEAST 3'-0" IN FRONT OF ELECTRICAL EQUIPMENT PER NEC ARTICLE NO. 110.
4. ALL EQUIPMENT SHALL BE GROUNDED. PROVIDE A COMPLETE GROUNDING SYSTEM IN ACCORDANCE WITH ARTICLE 250 OF THE NEC.
5. CONDUIT ROUTING AND WALL PENETRATIONS SHOWN DIAGRAMMATICALLY. EXACT ROUTING SHALL BE COORDINATED IN THE FIELD.
6. SWITCHES SHALL BE MOUNTED 4'-0" ABOVE FINISHED FLOOR UNLESS NOTED OTHERWISE. RECEPTACLES SHALL BE MOUNTED AT 3'-0" ABOVE FINISHED FLOOR UNLESS NOTED OTHERWISE.
7. SEE DRAWING AG-E-2 FOR CONDUIT AND WIRE SCHEDULE.
8. PROVIDE REDLINE MARKUPS FOR AS-BUILT CONDUIT ROUTING.
9. ALL CONDUITS SHALL BE CONCEALED UNLESS OTHERWISE NOTED OR APPROVED BY THE ENGINEER.

KEY NOTES:

1. ENSURE DUCTBANK GROUND CONDUCTORS ARE EXOTHERMICALLY BONDED TO THE GROUNDING ELECTRODE SYSTEM.
2. REFERENCE SHEETS GS-3 AND AG-C-2 FOR EQUIPMENT PAD MOUNTING DETAIL AND ADDITIONAL GENERATOR MOUNTING INFORMATION.
3. ALL DIRECT BURIED CONDUIT TO BE PVC SCHEDULE 80 CONDUIT, UNLESS NOTED OTHERWISE. CONTRACTOR TO VERIFY ANY EXISTING PIPING IN PROPOSED DUCT BANK LOCATION PRIOR TO TRENCHING.
4. REMOVE EXISTING GENERATOR AND SHED AND INSTALL NEW AUTOMATIC TRANSFER SWITCH IN SAME LOCATION. SEE SHEET AG-E-2 FOR ADDITIONAL ATS AND CONNECTION INFORMATION AND SHEET AG-D-1 FOR SITE DEMOLITION INFORMATION.
5. EXISTING 120/240V LIGHTING PANEL 'A' LOCATED IN MCC. INSTALL NEW CIRCUIT BREAKER FOR NEW GENERATOR SUB-PANEL FEED AS INDICATED IN PANEL SCHEDULE AS SHOWN ON SHEET AG-E-2. NEW CIRCUIT BREAKER TO MATCH EXISTING TYPE AND MINIMUM SHORT CIRCUIT RATING.
6. EXISTING SCADA RTU CABINET (RTU-400). TERMINATE ALL CONTROL AND 4-20mA ANALOG SIGNAL WIRE IN EXISTING RTU CABINET. COORDINATE THE GENERATOR CONTROL AND SIGNAL REQUIREMENTS WITH THE CITY OF REDLANDS. ALL PROGRAMMING BY OTHERS.
   SEE DETAIL #6 ON SHEET GE-3 FOR GENERATOR I/O CONNECTION DIAGRAM.

LIGHTING FIXTURE SCHEDULE

TYPE	DESCRIPTION	LAMPS NO.	LAMPS WATTS	LAMPS TYPE	MOUNTING TYPE
A	WALL MOUNTED SOLAR WALL PACK LIGHT SOLERA OFF-GRID LED SOLAR WALL PACK LIGHT CATALOG #: SL-SWL-15W-40K-BK-G2	3	100	LED 4000K	WALL MTD SOLAR

LINE IS 2 INCHES AT FULL SIZE
IF NOT 2" – SCALE ACCORDINGLY

BRADY
Water • Power • Transportation
10089 Willow Creek Rd., Suite 375
San Diego, California 92131
P: 858.496.0500 - www.richardbrady.com

REGISTERED PROFESSIONAL ENGINEER RYAN S. NISHIMURA No. 20050 ELECTRICAL STATE OF CALIFORNIA
08/28/2025

Letter	Description	Date	Initial	Initial
	Revisions		Approved by:	

CITY OF REDLANDS
Municipal Utilities and Engineering Department

WATER FACILITIES GENERATORS
PROJECT No. 501028

AGATE ELECTRICAL SITE PLAN

AG-E-1

D-10117

Designed by: CCW
Date: 08/28/2025
Checked by: RSN
Date: 08/28/2025
Drawn by: CCW
Date: 08/28/2025
Checked by: RSN
Date: 08/28/2025

Reviewed By: _____
Gerard J. Nepomuceno, Civil Engineer, R.C.E. 93200 Date
Approved By: _____
Goutam K. Dobey, City Engineer, R.C.E. 75646 Date

Sheet 14 of 38 Sheets
Scale: Horiz. AS SHOWN
Vert. NONE

P:\WHB_South\REDLND\REDLND.006_Engineering and Design of Water Facilities Generators (No. 20230112VW)\4_EngDesign\2_Dwgs\4-Agate PS\AG-E-1 ELECTRICAL SITE PLAN.dwg | Plotted: 8/28/2025

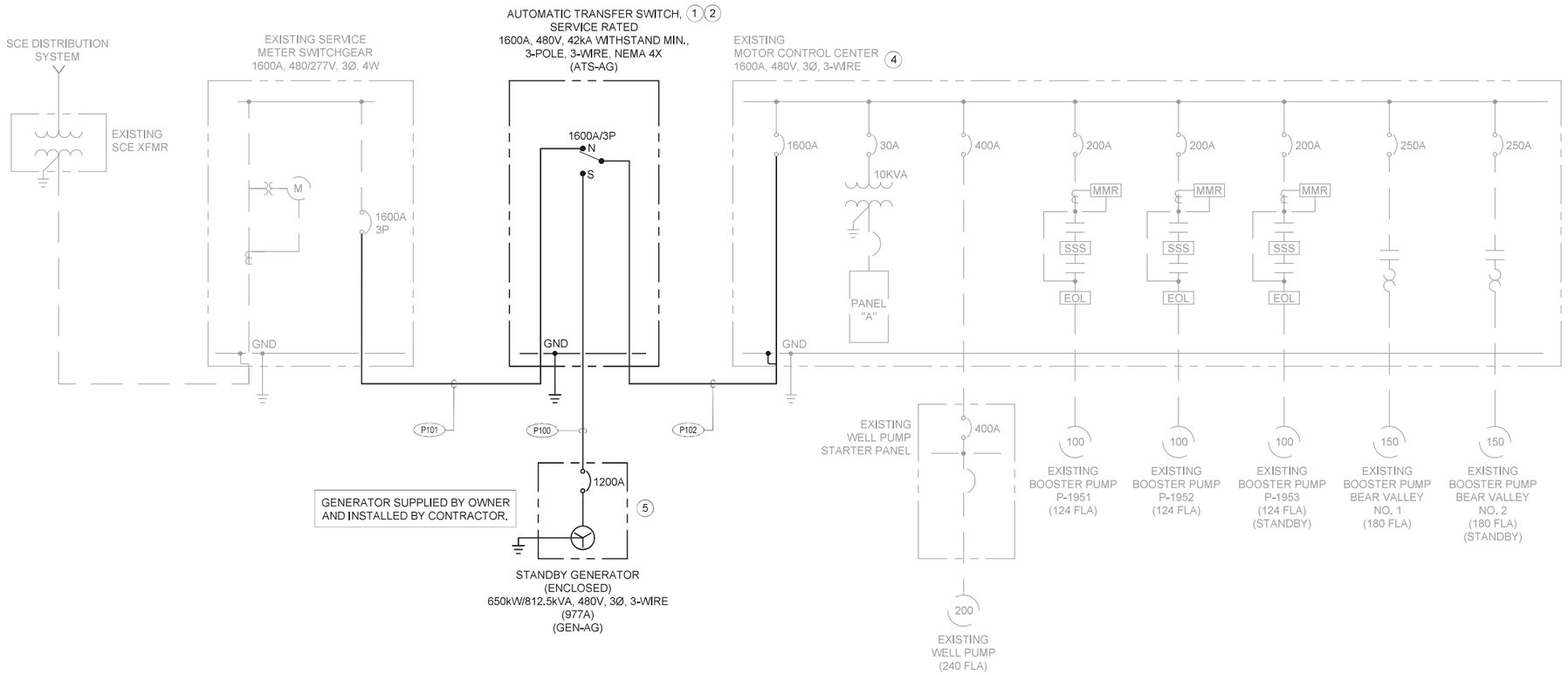

ELECTRICAL SINGLE-LINE DIAGRAM (1)

SCALE: N/A

KEY NOTES:

1. ALL SHORT CIRCUIT INTERRUPTING AND PROTECTING DEVICES SHALL HAVE A SHORT CIRCUIT INTERRUPTING RATING EQUAL TO OR GREATER THAN THE AVAILABLE SHORT CIRCUIT ON THE BUS.
2. REPLACE EXISTING AUTOMATIC TRANSFER SWITCH WITH NEW AUTOMATIC TRANSFER SWITCH. REFERENCE SITE PLAN AND ELEVATIONS FOR NEW ATS ENCLOSURE DIMENSIONS AND LOCATION.
3. PROVIDE AND INSTALL ONE NEW 40A, 2P CIRCUIT BREAKER IN PANEL 'A' AS SHOWN IN PANEL SCHEDULE BELOW. ALL NEW CIRCUIT BREAKERS INSTALLED SHALL MATCH THE EXISTING CIRCUIT BREAKER TYPE AS CURRENTLY INSTALLED IN PANEL.
4. DISCONNECT ALL PUMPS CURRENTLY CONNECTED TO EXISTING GENERATOR AND RECONNECT TO EXISTING MCC BUS AS REQUIRED.
5. GENERATOR SUPPLIED BY OWNER AND INSTALLED BY CONTRACTOR.
6. SEE DETAIL #6 ON SHEET GE-3 FOR GENERATOR I/O CONNECTION DIAGRAM.
7. EXISTING LOAD VALUES ON THE EXISTING PANEL 'P1' ARE UNKNOWN AND WILL NEED TO BE VERIFIED PRIOR TO ADDING ANY FUTURE EQUIPMENT LOADS.

PANEL A

100 AMP BUS RATING | 100 AMP MAIN C/B | – kA SHORT CIRCUIT RATING | LOCATION: MCC
120/240 VOLTS | 1 PHASE | 3 WIRE | 60 Hz. | ELECTRONIC GRADE | 20 POLES | SURFACE MOUNTED

CIRCUIT NO.	DESCRIPTION	LOAD VA PHASE A	LOAD VA PHASE B	BREAKER AMPS/POLES	NOTES	CIRCUIT NO.	DESCRIPTION	LOAD VA PHASE A	LOAD VA PHASE B	BREAKER AMPS/POLES	NOTES
1	B.V. LEVEL XMTR	–		20/1		2	LED LIGHT	–		20/1	
3	CL2 SHED		–	20/1		4	CLAY VALVE VAULT RECPT		–	20/1	
5	ESS	–		20/1		6	SPARE	–		20/1	
7	GENERATOR SUB-PANEL		3400	40/2		8	SPACE		–	–	
9		3400				10	SPACE	–		–	
11	SPACE		–	–		12	SPACE		–	–	
13	SPACE	–		–		14	SPACE	–		–	
15	SPACE		–	–		16	SPACE		–	–	
17	SPACE	–		–		18	240V IN USE	–		30/2	
19	SPACE		–	–		20			–		
	MAIN BREAKER	–		100/2							
			–								
	TOTAL VA	3400	3400				TOTAL VA	–	–		
							TOTAL PHASE KVA	–	–		
							TOTAL CONNECTED KVA	–			

3 — 7

PANEL SCHEDULE

CONDUIT SCHEDULE

CONDUIT NUMBER	SIZE	FROM	TO	CONDUIT FILL CONDUCTORS	PWR	CONT	INST	REMARKS
P100	(4 SETS) 3"C.	AUTOMATIC TRANSFER SWITCH "ATS-AG"	GENERATOR "GEN-AG"	(4 SETS) 3-350MCM, 1#3/0G	X			MAIN GENERATOR FEED (APP 100')
P100A	(1) 3"C.	AUTOMATIC TRANSFER SWITCH "ATS-AG"	GENERATOR "GEN-AG"	SPARE CONDUIT				SPARES
P101	(4 SETS) 4"C.	EXISTING SERVICE ENTRNACE SECTION	AUTOMATIC TRANSFER SWITCH "ATS-AG"	(4 SETS) 3-600MCM, 1#4/0G	X			
P102	(4 SETS) 4"C.	AUTOMATIC TRANSFER SWITCH "ATS-AG"	EXISTING MCC	(4 SETS) 3-600MCM, 1#4/0G	X			
P200	1"C.	LIGHTING PANEL "A"	GENERATOR "GEN-AG" PANEL	3#8, 1#10G	X			MAIN GENERATOR PANEL POWER
C300	1"C.	GENERATOR "GEN-AG"	SITE SCADA RTU CAB. (RTU-400)	16#14, 1#14G		X		GENERATOR CONTROL SIGNALS (SEE DETAIL #6 SHT GE-3)
C301	1"C.	AUTOMATIC TRANSFER SWITCH "ATS-AG"	SITE SCADA RTU CAB. (RTU-400)	4#14, 1#14G		X		ATS CONTROL SIGNALS
C301A	1"C.	GENERATOR "GEN-AG"	SITE SCADA RTU CAB. (RTU-400)	SPARE CONDUIT				SPARES (6)
A400	1"C.	GENERATOR "GEN-AG"	SITE SCADA RTU CAB. (RTU-400)	1#16TSP			X	GENERATOR ANALOG (4-20) SIGNALS

CONDUIT & CABLE SCHEDULE

BRADY
Water • Power • Transportation
10089 Willow Creek Rd., Suite 375
San Diego, California 92131
P: 858.496.0500 - www.richardbrady.com

REGISTERED PROFESSIONAL ENGINEER RYAN S. NISHIMURA No. 20050 ELECTRICAL STATE OF CALIFORNIA
08/28/2025

Letter	Description	Date	Initial	Initial
	Revisions			Approved by:

LINE IS 2 INCHES AT FULL SIZE
IF NOT 2" – SCALE ACCORDINGLY

CITY OF REDLANDS
Municipal Utilities and Engineering Department

WATER FACILITIES GENERATORS
PROJECT No. 501028

AGATE SINGLE LINE DIAGRAM AND SCHEDULES

AG-E-2

Designed by: CCW Date: 08/28/2025
Checked by: RSN Date: 08/28/2025
Drawn by: CCW Date: 08/28/2025
Checked by: RSN Date: 08/28/2025

Reviewed By: Gerard J. Nepomuceno, Civil Engineer, R.C.E. 93200 Date
Approved By: Goutam K. Dobey, City Engineer, R.C.E. 75646 Date

Sheet 15 of 38 Sheets
Scale: Horiz. AS SHOWN
Vert. NONE

D-10117

P:\WHB_South\REDLND\REDLND.006_Engineering and Design of Water Facilities Generators (No. 20230112WM)\4_EngDesign\2_Dwgs\4-Agate PS\AG-E-2 SINGLE LINE DIAGRAM AND SCHEDULES.dwg | Plotted: 8/28/2025

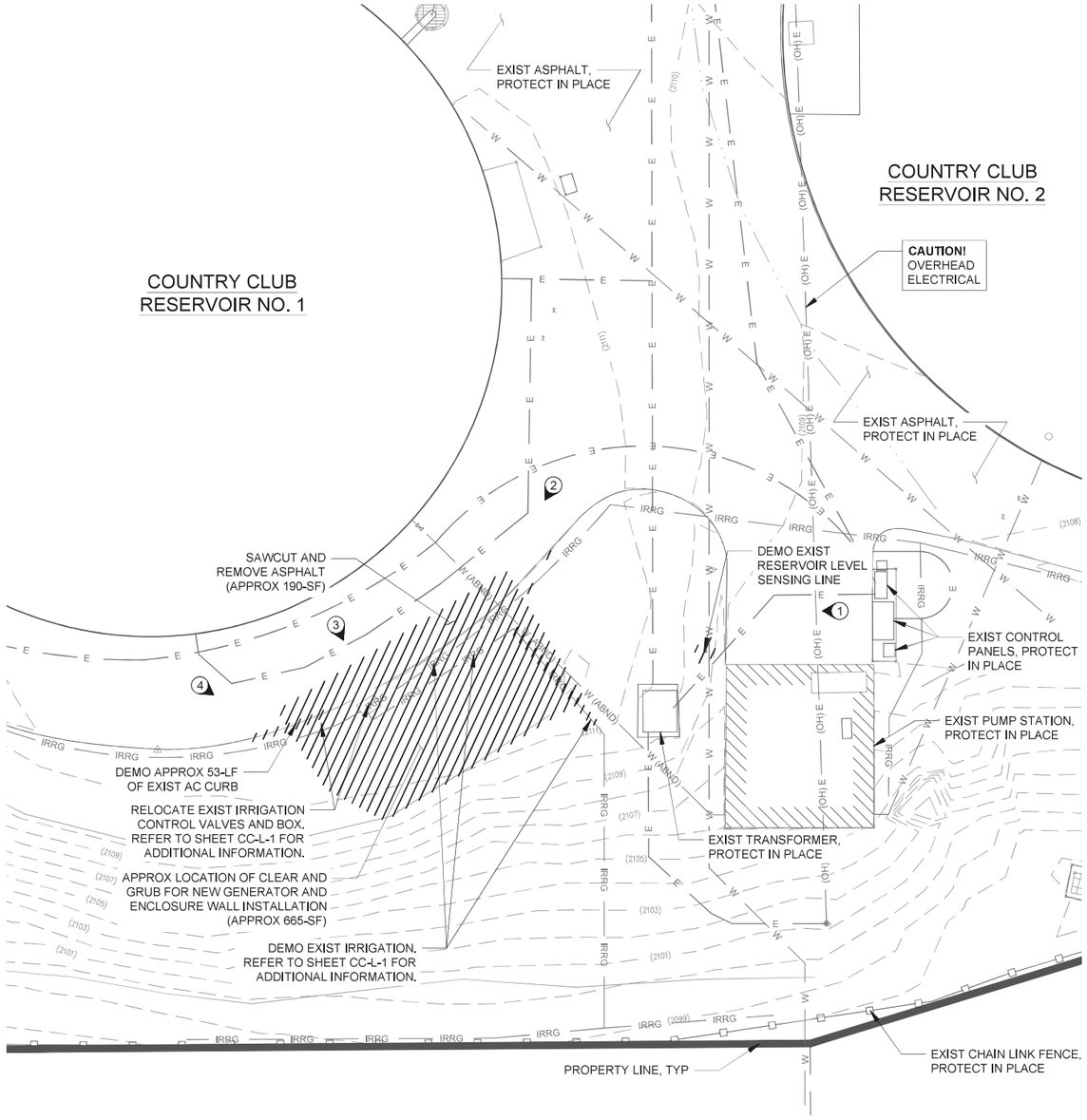

SITE DEMO PLAN

SCALE : 1" = 10'-0"

10' 0 10' 20'
1" = 10'

UTILITY NOTE:

ATTENTION IS DIRECTED TO THE POSSIBLE EXISTENCE OF UNDERGROUND FACILITIES NOT KNOWN OR IN A LOCATION DIFFERENT FROM THAT WHICH IS NOTED ON THE PLANS OR IN THE SPECIAL PROVISIONS. THE CONTRACTOR SHALL TAKE STEPS TO ASCERTAIN THE EXACT LOCATION OF ALL UNDERGROUND FACILITIES PRIOR TO THE START OF ANY CONSTRUCTION AND TO PROTECT IN PLACE ALL SUCH FACILITIES FROM ANY DAMAGE OR INTERFERENCE WITH THEIR SERVICE AND BEFORE EXCAVATING, THE CONTRACTOR SHALL VERIFY THE LOCATION OF UNDERGROUND UTILITIES BY CONTACTING EACH OF THE FOLLOWING LISTED UTILITY COMPANIES:

- ELECTRIC: SOUTHERN CALIFORNIA EDISON (SCE)
- GAS: SOUTHERN CALIFORNIA GAS COMPANY
- WATER & SEWER: CITY OF REDLANDS

LEGEND

③	PHOTO NUMBER, SEE DETAILS

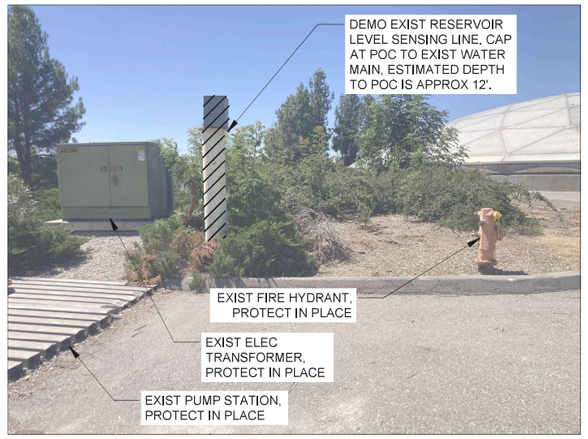

SITE APPURTENANCES (WEST)

SCALE: NONE

1



SITE (WEST)

SCALE: NONE

2

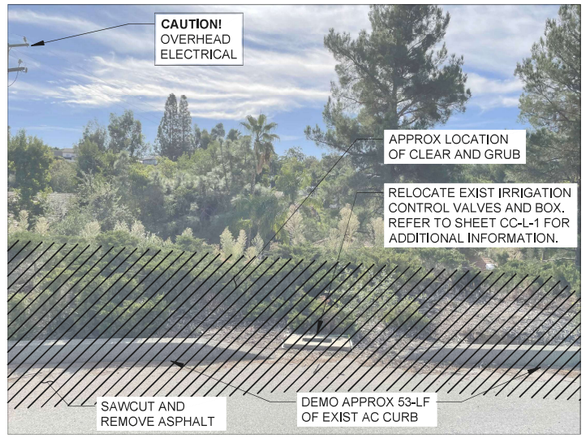

SITE (SOUTH)

SCALE: NONE

3

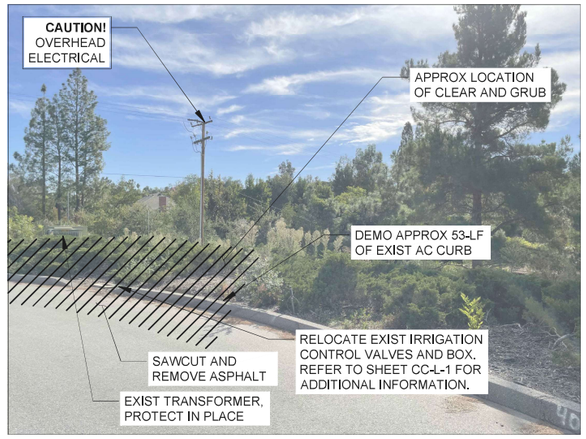

SITE (SOUTHWEST)

SCALE: NONE

4

LINE IS 2 INCHES AT FULL SIZE
IF NOT 2" – SCALE ACCORDINGLY

Letter	Description	Date	Initial	Initial
	Revisions			Approved by:

BRADY
Water • Power • Transportation
10089 Willow Creek Rd., Suite 375
San Diego, California 92131
P: 858.496.0500 - www.richardbrady.com

REGISTERED PROFESSIONAL ENGINEER
GARRETT D. MURAWSKI
C 90365
CIVIL
STATE OF CALIFORNIA

08/28/2025

CITY OF REDLANDS
Municipal Utilities and Engineering Department

WATER FACILITIES GENERATORS
PROJECT No. 501028

SITE DEMO PLAN AND DETAILS

CC-D-1

D-10117

Designed by:	GDM	Reviewed By:	
Date:	08/28/2025	Gerard J. Nepomuceno, Civil Engineer, R.C.E. 93200	Date
Checked by:	KCK	Approved By:	
Date:	08/28/2025	Goutam K. Dobey, City Engineer, R.C.E. 75646	Date
Drawn by:	GDM	Sheet 16 of 38 Sheets	
Date:	08/28/2025	Scale: Horiz. AS SHOWN	
Checked by:	KCK	Vert. NONE	
Date:	08/28/2025		

P:\WHB_South\REDLND\REDLND.006_Engineering and Design of Water Facilities Generators (No. 20230112VM)\4_EngDesign\2_Dwgs\5-Country Club PS\CC-D-1 SITE DEMO PLAN.dwg | Plotted: 8/28/2025

NOTE:
COORDINATES SHOWN ARE BASED ON THE CALIFORNIA COORDINATE SYSTEM (CCS83), ZONE VI, 1983 NAD (2017.50 EPOCH)

BEARINGS ARE BASED ON THE BEARING BETWEEN CALIFORNIA SPATIAL REFERENCE CENTER CONTINUOUS GPS STATIONS "CRFP" TO "RTHS" BEING N76°06'46"W

ELEVATIONS ARE BASED ON RIVERSIDE COUNTY BENCH MARK "A 296 RESET", DESCRIBED AS "AT MENTONE, ALONG MENTONE BOULEVARD, AT MILEPOLE 12, 62,0 FEET EAST OF AND ACROSS THE TRACK FROM THE SOUTHEAST CORNER OF THE ATCHISON, TOPEKA AND SANTA FE RAILWAY STATION, 20,3 FEET EAST OF THE NORTHWEST CORNER OF A LARGE WAREHOUSE, IN THE TOP OF THE EAST END OF THE BOTTOM CONCRETE STEP, 25.9 FEET EAST OF THE EAST RAIL OF A SIDE TRACK, 7,8 FEET NORTH OF THE EAST EDGE OF A DOOR TO THE WAREHOUSE, ABOUT 1/2 FOOT HIGHER THAN AN ENTRANCE WALK, AND ABOUT 2 1/2 FEET HIGHER THAN THE RAILROAD."
ELEV.= 1653.10 FEET (NAVD 88)

DATE OF SURVEY: JUNE, 2023

LEGEND
-DECIDUOUS TREE
-ELEC. PULLBOX
-ELEC. RISER
-FENCE
-LIGHT STANDARD
-FIRE HYDRANT
-GUY ANCHOR
-POWER POLE
-IRR CONTROL VALVE
-WATER VALVE
-WATER RISER
-UNKNOWN RISER

PROFESSIONAL LAND SURVEYOR · RUEL DEL CASTILLO · P.L.S. 4212 · STATE OF CALIFORNIA

I CERTIFY THAT THIS TOPOGRAPHIC SURVEY OF APN: 0167-17-101, LOCATED IN THE CITY OF REDLANDS, CALIFORNIA, WAS COMPLETED BY ME, OR UNDER MY DIRECT SUPERVISION, DURING JUNE, 2023.

Ruel del Castillo — 7/5/2023
RUEL DEL CASTILLO — DATE
CALIFORNIA P.L.S. 4212

0 20 40 Feet
SCALE: 1" = 20'

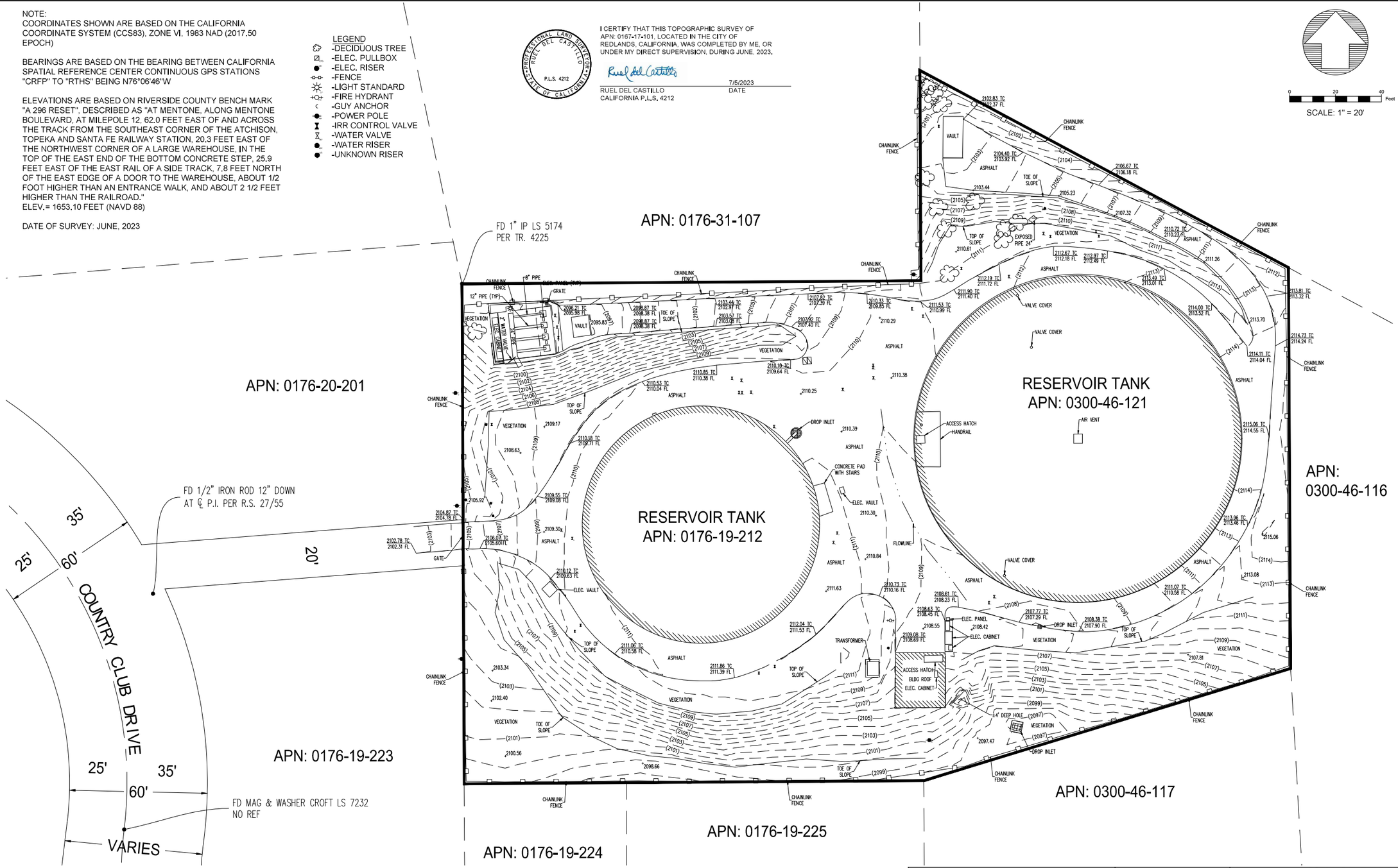

LINE IS 2 INCHES AT FULL SIZE
IF NOT 2" – SCALE ACCORDINGLY

Letter	Description	Date	Initial	Initial
	Revisions			Approved by:

BRADY
Water • Power • Transportation
10089 Willow Creek Rd., Suite 375
San Diego, California 92131
P: 858.496.0500 - www.richardbrady.com

08/28/2025

CITY OF REDLANDS
Municipal Utilities and Engineering Department

WATER FACILITIES GENERATORS
PROJECT No. 501028

EXISTING CONDITIONS SURVEY

CC-C-1

Designed by:	RDC	Reviewed By:	
Date:	08/28/2025	Gerard J. Nepomuceno, Civil Engineer, R.C.E. 93200	Date
Checked by:	KCK	Approved By:	
Date:	08/28/2025	Goutam K. Dobey, City Engineer, R.C.E. 75646	Date
Drawn by:	GDM	Sheet 17 of 38 Sheets	
Date:	08/28/2025	Scale: Hortz. AS SHOWN	
Checked by:	KCK	Vert. NONE	
Date:	08/28/2025		

D-10117

P:\WHB_South\REDLND\REDLND.006_Engineering and Design of Water Facilities Generators (No. 20230112WM)\4_EngDesign\2_Dwgs\5-Country Club PS\CC-C-1 EXISTING CONDITIONS SURVEY.dwg | Plotted: 8/28/2025

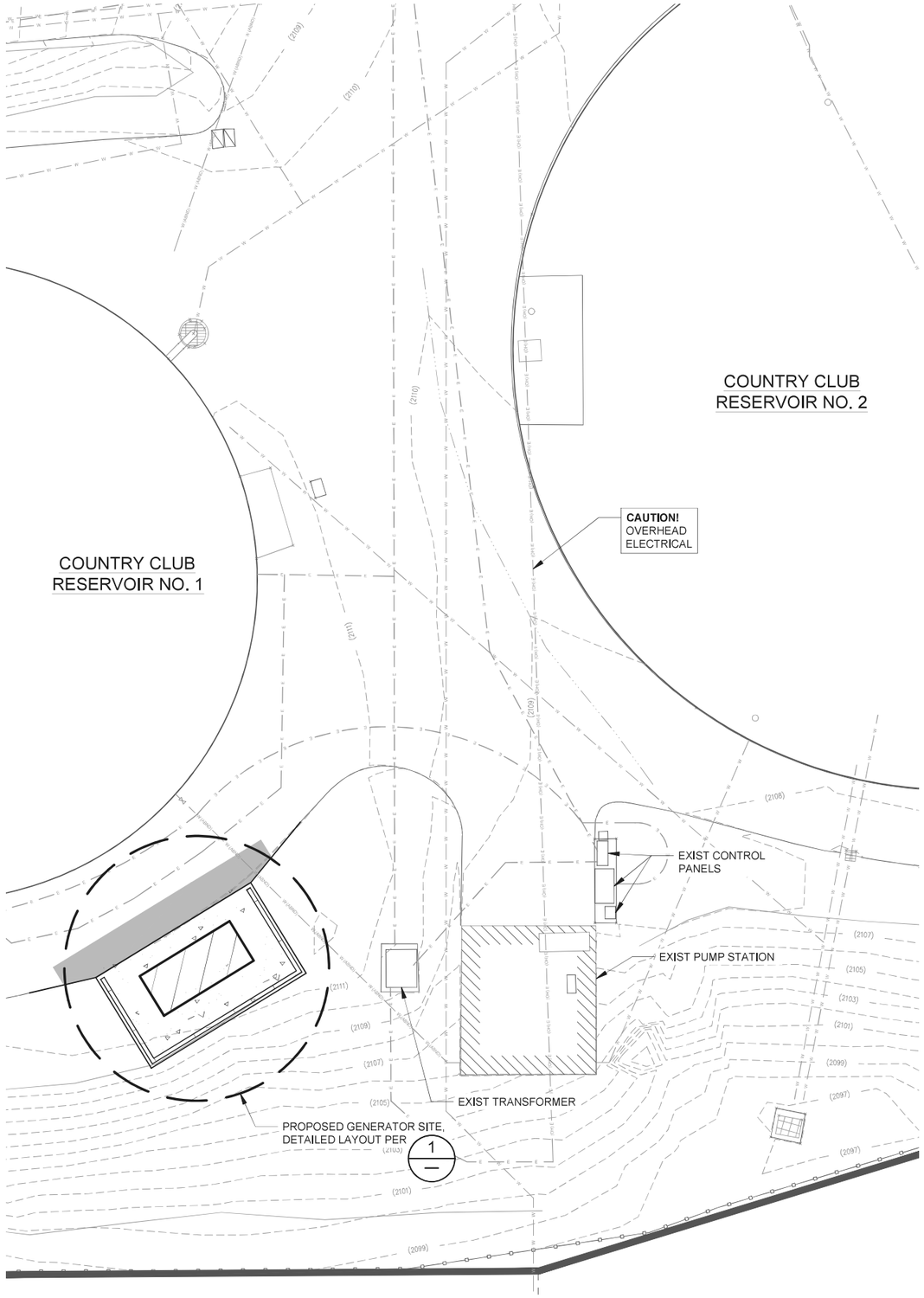

OVERALL SITE PLAN

SCALE : 1" = 10'-0"

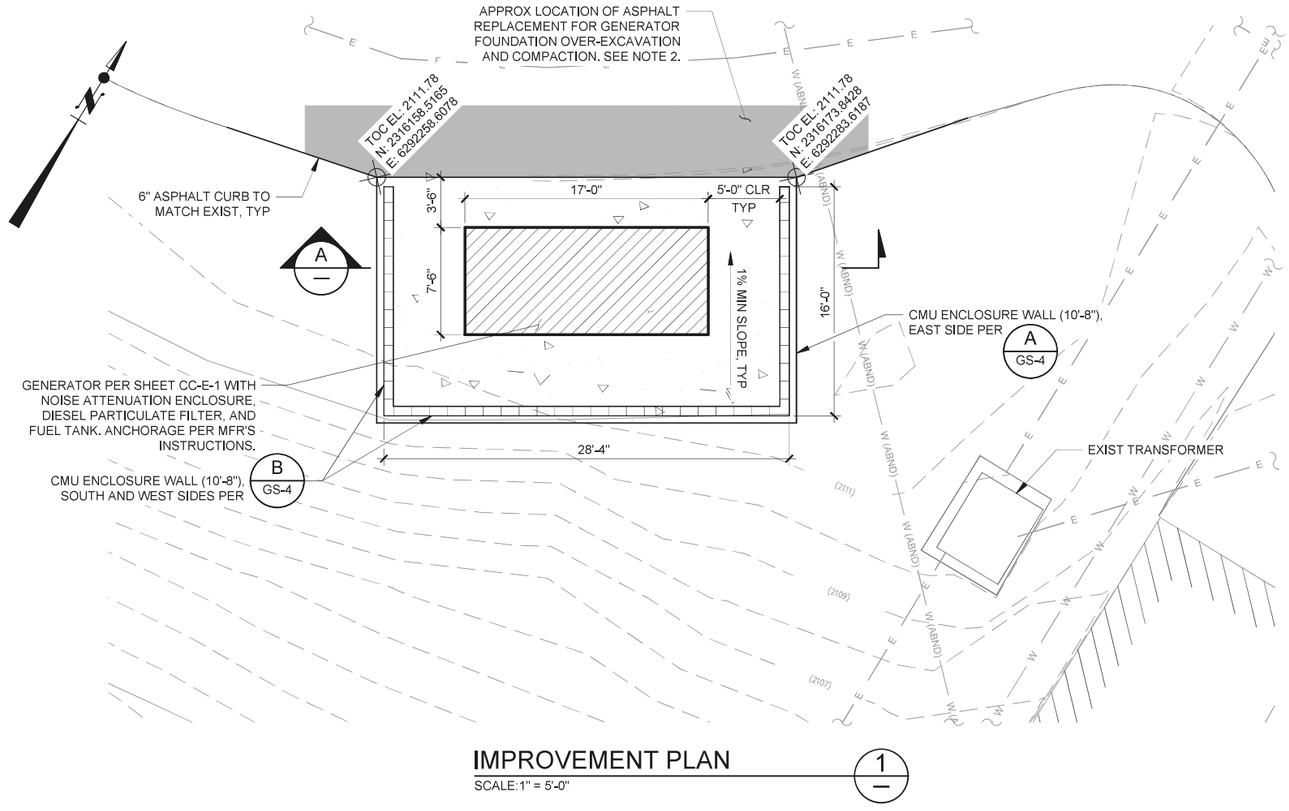

IMPROVEMENT PLAN

SCALE:1" = 5'-0"

1
—

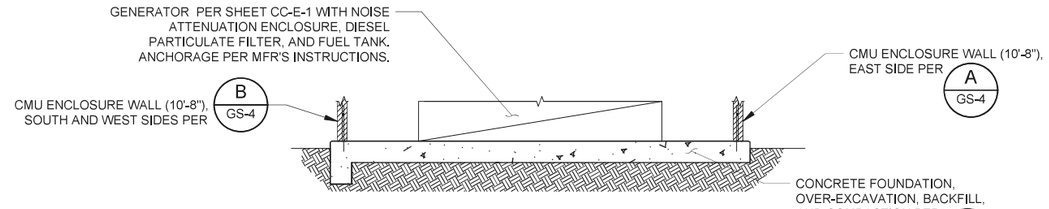

IMPROVEMENT SECTION

SCALE:1" = 5'-0"

A
—

NOTES:

1. CONTRACTOR SHALL SUBMIT GENERATOR ANCHORAGE DESIGN AND SEISMIC CALCULATIONS STAMPED BY A CALIFORNIA LICENSED PROFESSIONAL ENGINEER FOR APPROVAL BY EOR.
2. SAWCUT TO ESTABLISH CLEAN EDGE AND REPLACE ASPHALT IN KIND (MIN THICKNESS 4" ASPHALT ON 8" AGGREGATE BASE).
3. ANY INCIDENTAL DAMAGE TO PAVEMENT SHALL BE REPAIRED BY THE CONTRACTOR.
4. REFER TO SHEET CC-E-1 FOR ELECTRICAL SCOPE OF WORK.
5. REFER TO SHEET CC-L-1 FOR IRRIGATION AND LANDSCAPING SCOPE OF WORK.

LINE IS 2 INCHES AT FULL SIZE
IF NOT 2" – SCALE ACCORDINGLY

BRADY
Water • Power • Transportation
10089 Willow Creek Rd., Suite 375
San Diego, California 92131
P: 858.496.0500 - www.richardbrady.com

REGISTERED PROFESSIONAL ENGINEER
GARRETT D. MURAKAMI
C 90365
CIVIL
STATE OF CALIFORNIA

08/28/2025

Letter	Description	Date	Initial	Initial
	Revisions			Approved by:

CITY OF REDLANDS
Municipal Utilities and Engineering Department

WATER FACILITIES GENERATORS
PROJECT No. 501028

OVERALL SITE PLAN

CC-C-2

Designed by: GDM Date: 08/28/2025
Checked by: KCK Date: 08/28/2025
Drawn by: GDM Date: 08/28/2025
Checked by: KCK Date: 08/28/2025

Reviewed By:
Gerard J. Nepomuceno, Civil Engineer, R.C.E. 93200 Date
Approved By:
Goutam K. Dobey, City Engineer, R.C.E. 75646 Date

Sheet 18 of 38 Sheets
Scale: Horiz. AS SHOWN
Vert. NONE

D-10117

P:\VHB_South\REDLND\REDLND.006_Engineering and Design of Water Facilities Generators (No. 20230112VM)\4_EngDesign\2_Dwgs\5-Country Club PS\CC-C-2 OVERALL SITE PLAN.dwg | Plotted: 8/28/2025

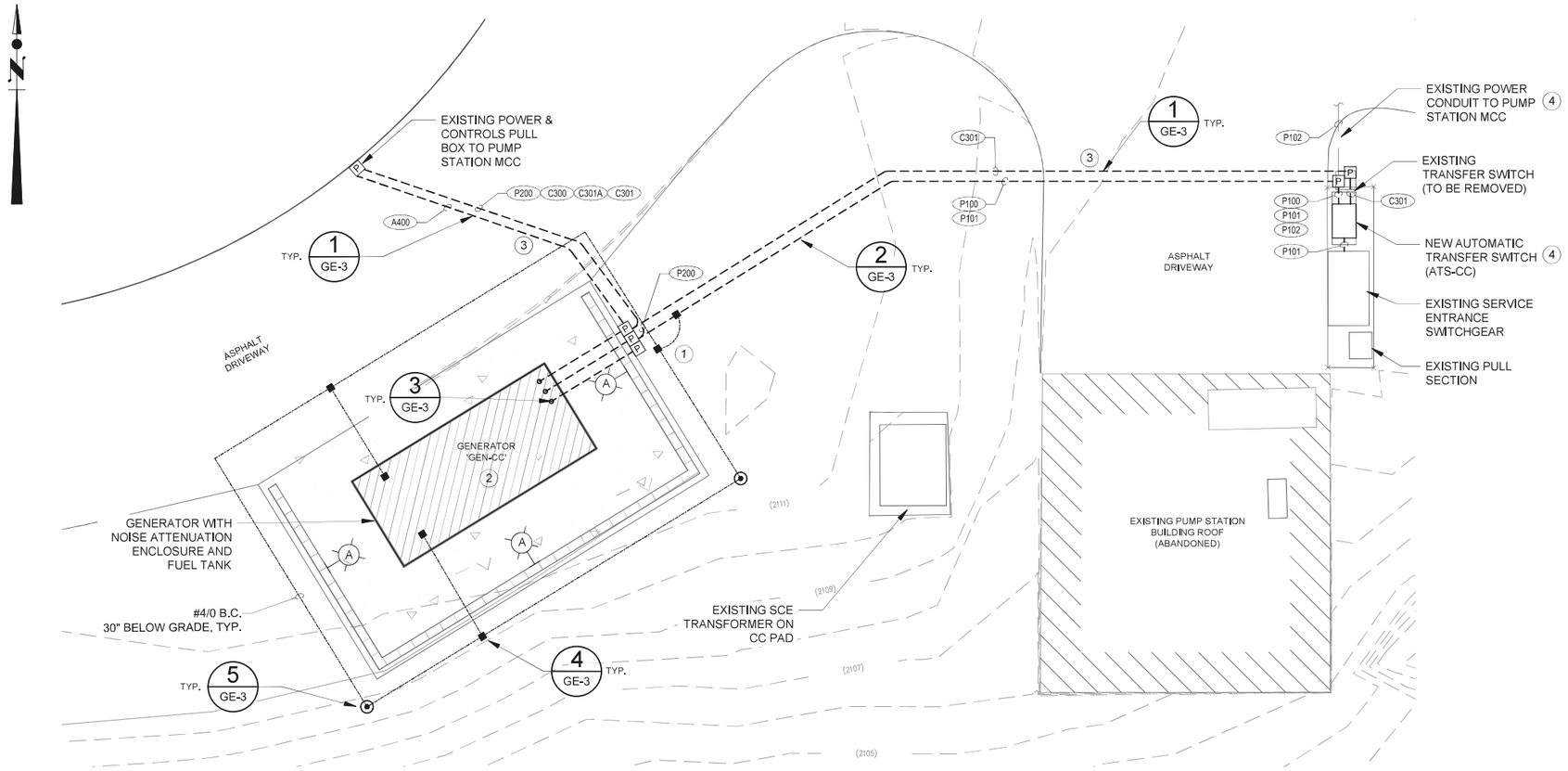

ENLARGED ELECTRICAL SITE PLAN 1

SCALE:1" = 5'-0"

5' 0 5' 10'
1" = 5'

LINE IS 2 INCHES AT FULL SIZE
IF NOT 2" – SCALE ACCORDINGLY

GENERAL NOTES:

1. COORDINATE NEW CONDUIT AND WIRE TO NEW PANEL LOCATIONS AS REQUIRED FOR A COMPLETE AND FULLY OPERATIONAL SYSTEM.
2. THE PLANS DO NOT ALWAYS SHOW RACEWAYS AND CONDUCTORS BETWEEN RECEPTACLES, LIGHTING FIXTURES AND SWITCHES. HOWEVER, FURNISH AND INSTALL THESE CONNECTIONS IN ACCORDANCE WITH THE ASSIGNED FIXTURE OR RECEPTACLE CIRCUIT NUMBER AND SWITCH DESIGNATIONS. HOMERUN SHOWN CONCEALED SHALL BE INDICATIVE OF THE ENTIRE CIRCUIT INSTALLATION. THE SAME SHALL APPLY FOR HOMERUNS SHOWN EXPOSED. REFER TO SPECIFICATIONS FOR MATERIALS AND INSTALLATION REQUIREMENTS.
3. MAINTAIN AT LEAST 3'-0" IN FRONT OF ELECTRICAL EQUIPMENT PER NEC ARTICLE NO. 110.
4. ALL EQUIPMENT SHALL BE GROUNDED. PROVIDE A COMPLETE GROUNDING SYSTEM IN ACCORDANCE WITH ARTICLE 250 OF THE NEC.
5. CONDUIT ROUTING AND WALL PENETRATIONS SHOWN DIAGRAMMATICALLY. EXACT ROUTING SHALL BE COORDINATED IN THE FIELD.
6. SWITCHES SHALL BE MOUNTED 4'-0" ABOVE FINISHED FLOOR UNLESS NOTED OTHERWISE. RECEPTACLES SHALL BE MOUNTED AT 3'-0" ABOVE FINISHED FLOOR UNLESS NOTED OTHERWISE.
7. SEE DRAWING CC-E-2 FOR CONDUIT AND WIRE SCHEDULE.
8. PROVIDE REDLINE MARKUPS FOR AS-BUILT CONDUIT ROUTING.
9. ALL CONDUITS SHALL BE CONCEALED UNLESS OTHERWISE NOTED OR APPROVED BY THE ENGINEER.

KEY NOTES:

(1) ENSURE DUCTBANK GROUND CONDUCTORS ARE EXOTHERMICALLY BONDED TO THE GROUNDING ELECTRODE SYSTEM.

(2) REFERENCE SHEETS GS-3 AND CC-C-2 FOR EQUIPMENT PAD MOUNTING DETAIL AND ADDITIONAL GENERATOR MOUNTING INFORMATION.

(3) ALL CONCRETE ENCASED CONDUIT TO BE PVC SCHEDULE 80 CONDUIT, UNLESS NOTED OTHERWISE. CONTRACTOR TO VERIFY ANY EXISTING PIPING IN PROPOSED DUCT BANK LOCATION PRIOR TO TRENCHING.

(4) REMOVE EXISTING AUTOMATIC TRANSFER SWITCH AND INSTALL NEW AUTOMATIC TRANSFER SWITCH IN SAME LOCATION. REUSE EXISTING CONDUIT. REMOVE EXISTING WIRING AND REPULL NEW POWER CONDUCTORS IN EXITING CONDUIT TO PUMP STATION MCC. SEE SHEET CC-E-2 FOR ADDITIONAL ATS AND CONNECTION INFORMATION.

(5) EXISTING 120/240V LIGHTING PANEL 'P1' LOCATED IN MCC AT SITE PUMP STATION. INSTALL NEW CIRCUIT BREAKER FOR NEW GENERATOR SUB-PANEL FEED AS INDICATED IN PANEL SCHEDULE AS SHOWN ON SHEET CC-E-2. NEW CIRCUIT BREAKER TO MATCH EXISTING TYPE AND MINIMUM SHORT CIRCUIT RATING.

(6) EXISTING SCADA RTU CABINET (IN MCC AT SITE PUMP STATION). TERMINATE ALL CONTROL AND 4-20MA ANALOG SIGNAL WIRE IN EXISTING RTU CABINET. COORDINATE THE GENERATOR CONTROL AND SIGNAL REQUIREMENTS WITH THE CITY OF REDLANDS. ALL PROGRAMMING BY OTHERS.
SEE DETAIL #6 ON SHEET GE-3 FOR GENERATOR I/O CONNECTION DIAGRAM.

LIGHTING FIXTURE SCHEDULE

TYPE	DESCRIPTION	LAMPS			MOUNTING TYPE
		NO.	WATTS	TYPE	
A	WALL MOUNTED SOLAR WALL PACK LIGHT SOLERA OFF-GRID LED SOLAR WALL PACK LIGHT CATALOG #: SL-SWL-15W-40K-BK-G2	3	100	LED 4000K	WALL MTD SOLAR

BRADY
Water • Power • Transportation

10089 Willow Creek Rd., Suite 375
San Diego, California 92131
P: 858.496.0500 - www.richardbrady.com

REGISTERED PROFESSIONAL ENGINEER
RYAN S. NISHIMURA
No. 20050
ELECTRICAL
STATE OF CALIFORNIA
08/28/2025

Letter	Description	Date	Initial	Initial
	Revisions		Approved by:	

CITY OF REDLANDS
Municipal Utilities and Engineering Department

WATER FACILITIES GENERATORS
PROJECT No. 501028

COUNTRY CLUB ELECTRICAL SITE PLAN

CC-E-1

Designed by: CCW
Date: 01/31/2024
Checked by: RSN
Date: 01/31/2024
Drawn by: CCW
Date: 01/31/2024
Checked by: RSN
Date: 01/31/2024

Reviewed By:
Gerard J. Nepomuceno, Civil Engineer, R.C.E. 93200 Date
Approved By:
Goutam K. Dobey, City Engineer, R.C.E. 75646 Date

Sheet 19 of 38 Sheets
Scale: Horiz. AS SHOWN
Vert. NONE

D-10117

P:\WHB_South\REDLND\REDLND.006_Engineering and Design of Water Facilities Generators (No. 20230112WJ)\4_EngDesign\2_Dwgs\5-Country Club PS\CC-E-1 ELECTRICAL SITE PLAN.dwg | Plotted: 8/28/2025

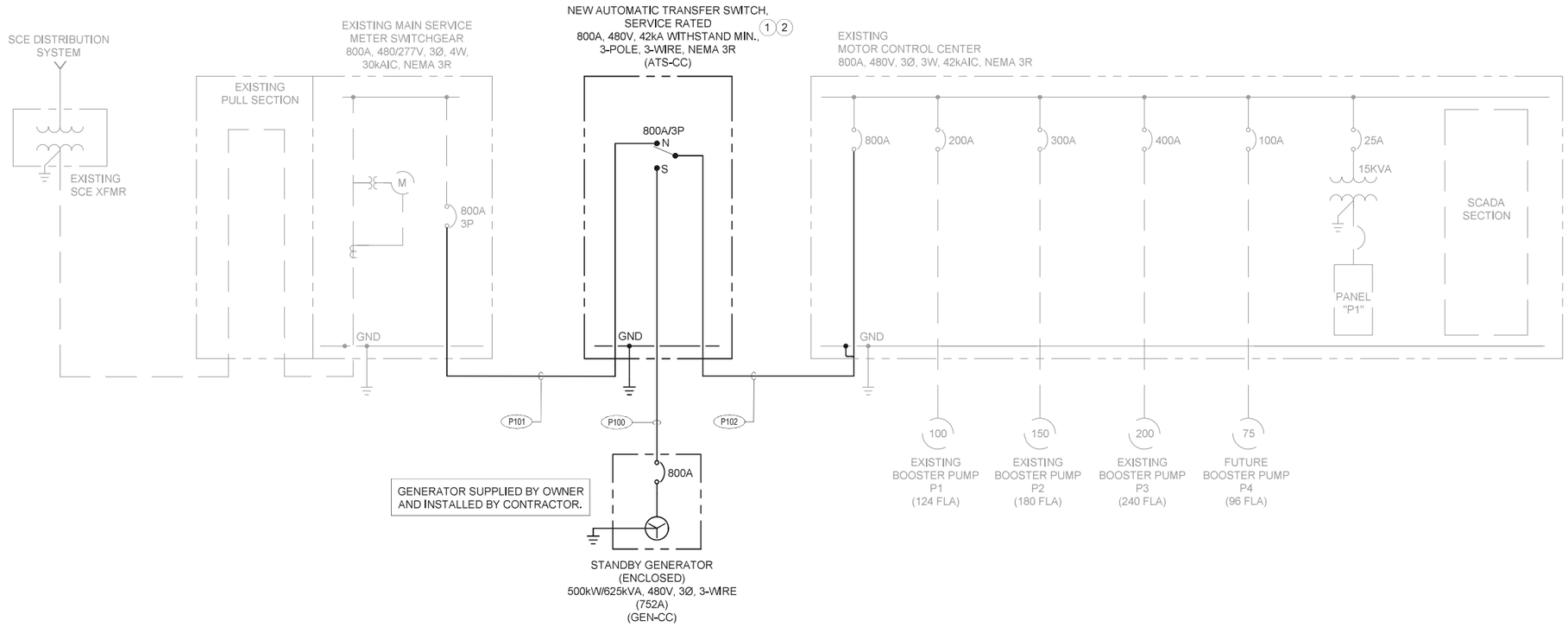

ELECTRICAL SINGLE-LINE DIAGRAM

SCALE: N/A

1

KEY NOTES:

1. ALL SHORT CIRCUIT INTERRUPTING AND PROTECTING DEVICES SHALL HAVE A SHORT CIRCUIT INTERRUPTING RATING EQUAL TO OR GREATER THAN THE AVAILABLE SHORT CIRCUIT ON THE BUS.
2. REPLACE EXISTING MANUAL TRANSFER SWITCH CONNECTION WITH NEW AUTOMATIC TRANSFER SWITCH. REFERENCE SITE PLAN AND ELEVATIONS FOR NEW ATS ENCLOSURE DIMENSIONS AND LOCATION.
3. PROVIDE AND INSTALL ONE NEW 40A, 2P CIRCUIT BREAKER IN PANEL 'P1' AS SHOWN IN PANEL SCHEDULE BELOW. ALL NEW CIRCUIT BREAKERS INSTALLED SHALL MATCH THE EXISTING CIRCUIT BREAKER TYPE AS CURRENTLY INSTALLED IN PANEL.
4. SEE DETAIL #6 ON SHEET GE-3 FOR GENERATOR I/O CONNECTION DIAGRAM.
5. EXISTING LOAD VALUES ON THE EXISTING PANEL 'P1' ARE UNKNOWN AND WILL NEED TO BE VERIFIED PRIOR TO ADDING ANY FUTURE EQUIPMENT LOADS.

PANEL P1

LOCATION: MCC

100 AMP BUS RATING | 60 AMP MAIN C/B | 10 kA SHORT CIRCUIT RATING | – POLES

120/240 VOLTS | 1 PHASE | 3 WIRE | 60 Hz. | ELECTRONIC GRADE | SURFACE MOUNTED

CIRCUIT NO.	DESCRIPTION	LOAD VA PHASE A	LOAD VA PHASE B	BREAKER AMPS/POLES	NOTES	CIRCUIT NO.	DESCRIPTION	LOAD VA PHASE A	LOAD VA PHASE B	BREAKER AMPS/POLES	NOTES
1	UNKNOWN	–		20/1		2	UNKNOWN	–		20/1	
3	UNKNOWN		–	20/1		4	UNKNOWN		–	20/1	
5	UNKNOWN	–		20/1		6	UNKNOWN	–		20/1	
7	SPACE		–	–		8	SPACE		–	–	
9	SPACE	–		–		10	SPACE	–		–	
11	SPACE		–	–		12	SPACE		–	–	
13	SPACE	–		–		14	GENERATOR SUB-PANEL	3400		40/2	3
15	SPACE		–	–		16			3400		
17	SPACE	–		–		18	UNKNOWN	–		20/2	
19	SPACE		–	–		20			–		
	MAIN BREAKER	–		60/2							
			–								
	TOTAL VA	–	–				TOTAL VA	–	–		
							TOTAL PHASE KVA	–	–		
							TOTAL CONNECTED KVA	–			

5

PANEL SCHEDULE

CONDUIT SCHEDULE

CONDUIT NUMBER	SIZE	FROM	TO	CONDUIT FILL CONDUCTORS	PWR	CONT	INST	REMARKS
P100	(3 SETS) 3"C.	AUTOMATIC TRANSFER SWITCH "ATS-CC"	GENERATOR "GEN-CC"	(3 SETS) 3-300MCM, 1#1/0G	X			MAIN GENERATOR FEED (APP 50')
P100A	(1) 3"C.	AUTOMATIC TRANSFER SWITCH "ATS-CC"	GENERATOR "GEN-CC"	SPARE CONDUIT				SPARES
P101	(3 SETS) 3"C.	EXISTING SERVICE ENTRANCE SECTION	AUTOMATIC TRANSFER SWITCH "ATS-CC"	(3 SETS) 3-300MCM, 1#1/0G	X			
P102	(3 SETS) 3"C.	AUTOMATIC TRANSFER SWITCH "ATS-CC"	EXISTING MCC	(3 SETS) 3-300MCM, 1#1/0G	X			
P200	1"C.	LIGHTING PANEL "P1"	GENERATOR "GEN-CC" PANEL	3#8, 1#10G	X			MAIN GENERATOR PANEL POWER
C300	1"C.	GENERATOR "GEN-CC"	SITE SCADA RTU (MCC)	16#14, 1#14G		X		GENERATOR CONTROL SIGNALS (SEE DETAIL #6 SHT GE-3)
C301	1"C.	AUTOMATIC TRANSFER SWITCH "ATS-CC"	SITE SCADA RTU (MCC)	4#14, 1#14G		X		ATS CONTROL SIGNALS
C301A	1"C.	GENERATOR "GEN-CC"	SITE SCADA RTU (MCC)	SPARE CONDUIT				SPARES
A400	1"C.	GENERATOR "GEN-AG"	SITE SCADA RTU CAB. (RTU-400)	1#16TSP			X	GENERATOR ANALOG (4-20) SIGNALS

4

CONDUIT & CABLE SCHEDULE

BRADY
Water • Power • Transportation
10089 Willow Creek Rd., Suite 375
San Diego, California 92131
P: 858.496.0500 - www.richardbrady.com

REGISTERED PROFESSIONAL ENGINEER RYAN S. NISHIMURA No. 20050 ELECTRICAL STATE OF CALIFORNIA

08/28/2025

Letter	Description	Date	Initial	Initial
	Revisions			Approved by:

LINE IS 2 INCHES AT FULL SIZE
IF NOT 2" – SCALE ACCORDINGLY

CITY OF REDLANDS
Municipal Utilities and Engineering Department

WATER FACILITIES GENERATORS PROJECT No. 501028

COUNTRY CLUB SINGLE LINE DIAGRAM AND SCHEDULES

CC-E-2

D-10117

Designed by: CCW Date: 01/31/2024
Checked by: RSN Date: 01/31/2024
Drawn by: CCW Date: 01/31/2024
Checked by: RSN Date: 01/31/2024

Reviewed By: Gerard J. Nepomuceno, Civil Engineer, R.C.E. 93200 Date
Approved By: Goutam K. Dobey, City Engineer, R.C.E. 75646 Date

Sheet 20 of 38 Sheets
Scale: Horiz. AS SHOWN
Vert. NONE

P:\WHB_South\REDLND\REDLND.006_Engineering and Design of Water Facilities Generators (No. 20230112WM)\4_Engdesign\2_Dwgs\5-Country Club PS\CC-E-2 SINGLE LINE DIAGRAM AND SCHEDULES.dwg | Plotted: 8/28/2025

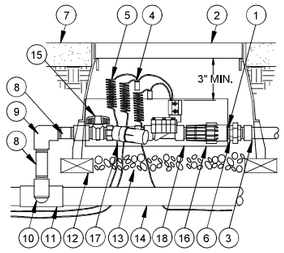

LEGEND

1. PVC SCH. 80 NIPPLE (CLOSE)
2. VALVE BOX WITH COVER: 24-INCH SIZE WITH BRANDING
3. PVC SCH. 40 ADAPTER
4. WATER PROOF CONNECTION (1 OF 2)
5. 30" LINEAR LENGTH OF WIRE - COILED
6. PVC SCH. 80 UNION
7. FINAL GRADE/TOP OF MULCH
8. PVC SCH. 80 NIPPLE (LENGTH AS REQUIRED)
9. PVC SCH. 40 ELL
10. PVC SCH. 80 NIPPLE (2" LENGTH) AND PVC SCH. 40 ELL
11. PVC SCH 40 TEE OR ELL.
12. BRICK (1 OF 4)
13. 3" MIN. DEPTH OF 1" WASHED GRAVEL
14. PVC SCH. 40 MAINLINE
15. IN-LINE BALL VALVE
16. PRESSURE REGULATOR — RAINBIRD XCZ-075-PRF, SEE LEGEND
17. Y STRAINER
18. CONTROL VALVE

REMOTE CONTROL VALVE - N.T.S.

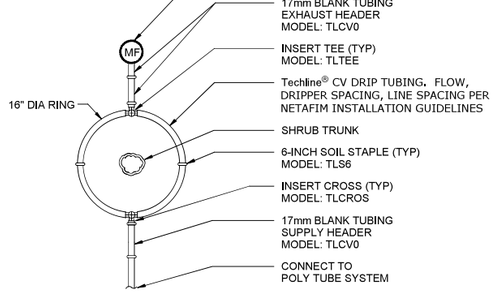

DRIP EMITTER RING - SHRUBS - N.T.S.

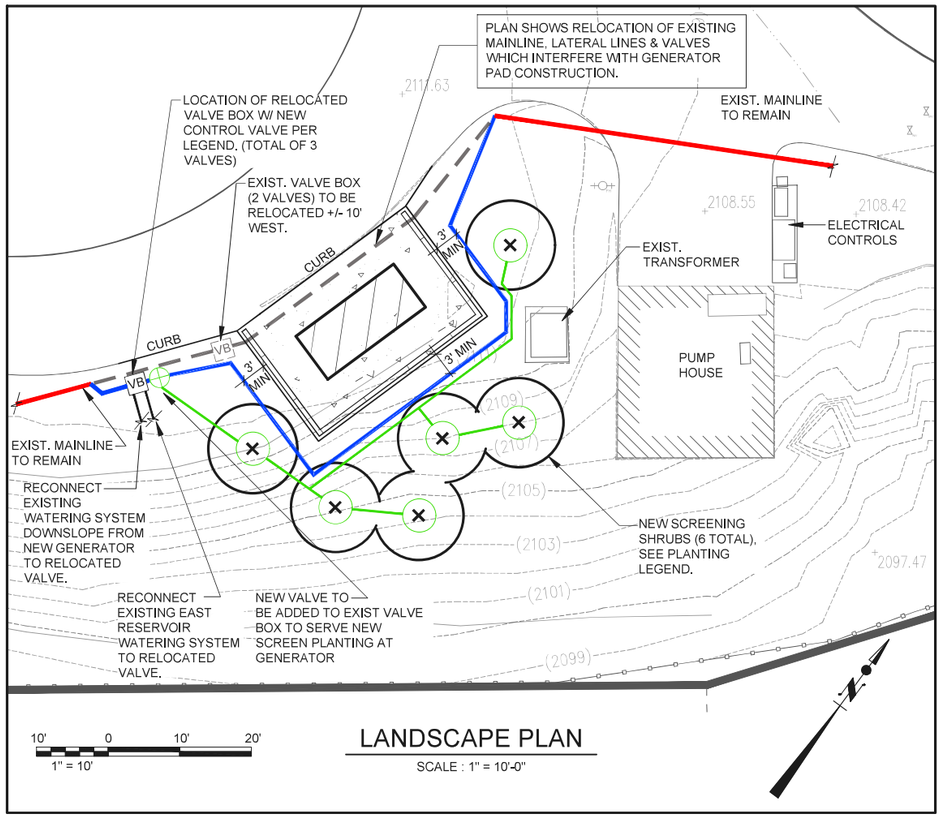

LANDSCAPE PLAN

SCALE : 1" = 10'-0"

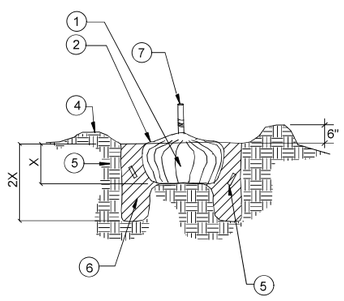

1. ROOT BALL - DO NOT COMPACT ROOT BALL SOIL. ALLOW ROOT BALL TO SETTLE TO FINISHED GRADE. FINISHED GRADE.
2. FINISHED GRADE.
3. ALLOW ROOT BALL TO SETTLE TO FINISHED GRADE.
4. 6-INCH BERM TIGHTLY COMPACTED IN PLACE TO FORM WATERING BASIN.
5. GROW POWER PLANT TABS PER MANUFACTURER'S RECOMMENDATIONS OR EQUIVALENT.
6. PREPARED SOIL MIX. PLANT PIT TO BE 2 TIMES THE WIDTH OF THE ROOT BALL.
7. SHRUB TRUNK.

SHRUB PLANTING - N.T.S.

PLANTING SCHEDULE:

SHRUBS:

HETEROMELES ARBUTIFOLIA	TOYON	(6) - 15 GAL. MULTI-TRUNK TO GROW AS LARGE SHRUBS

IRRIGATION LEGEND:

- VB — EXIST. VALVE BOX WITH (2) OPERATING VALVES (VB) TO BE RELOCATED
- EXIST. MAINLINE TO REMAIN
- EXIST. 1-1/2" MAINLINE TO BE REMOVED PER GENERATOR CONSTRUCTION
- VB — LOCATION OF RELOCATED VALVE BOX WITH 2 RELOCATED VALVES AND 1 NEW VALVE
- RE-ROUTED LATERAL LINES SERVING 2 RELOCATED VALVES

IRRIGATION EQUIPMENT SCHEDULE:

- NEW 1-1/2" MAINLINE - ROUTED AROUND NEW GENERATOR PAD AND TIE TO EXISTING AS SHOWN
- VALVE - RAINBIRD XCZ-075-PRF - 3/4" LOW FLOW VALVE WITH 3/4" PR RBY FILTER ASSEMBLED AS: ZONE KIT W/ PRESSURE REGULATING FILTER (30 PSI) (CROSS-REFERENCE TO REMOTE CONTROL VALVE DETAIL, THIS SHEET).
- PLANT DRIP EMITTER RING - SEE DETAIL, THIS SHEET.
- BLANK POLY TUBE, ON GRADE. ANCHOR AT 2' - 4' INTERVALS WITH 6" STAPLES.

GENERAL NOTES:

1. IRRIGATION VALVE CONTROL, MAINLINE CONNECTION AND PROVISION OF ELECTRICITY SHALL BE THE RESPONSIBILITY OF OTHERS.
2. EXISTING IRRIGATION LINES AND EQUIPMENT SCHEDULED TO REMAIN IN PLACE SHALL BE PROTECTED DURING CONSTRUCTION/GENERATOR INSTALLATION PROCESS.
3. UPON COMPLETION, APPLY A 3" THICK LAYER OF SHREDDED BARK MULCH OVER THE PLANTING AREA AND OVER SOIL DISTURBED BY CONSTRUCTION.
4. NEW PLANTING & IRRIGATION SCHEDULING TO BE DETERMINED BY THE INSTALLING CONTRACTOR AND THE PROPERTY OWNER/MAINTENANCE DEPARTMENT.

DIG ALERT
DIAL TOLL FREE 811
UNDERGROUND SERVICE ALERT OF SOUTHERN CALIFORNIA

LICENSED LANDSCAPE ARCHITECT — ANNA M. ALLISSI — No. 5151 — STATE OF CALIFORNIA

06/17/2025

ANNA ALLISSI
Landscape Architecture & Garden Design
Redlands, CA 92373
909.792.3377 Office
www.annaallissi.com
CA RLA# 3251

BRADY
Water • Power • Transportation
10089 Willow Creek Rd., Suite 375
San Diego, California 92131
P: 858.496.0500 - www.richardbrady.com

Letter	Description	Date	Initial	Initial

Revisions — Approved by:

CITY OF REDLANDS
Municipal Utilities and Engineering Department

WATER FACILITIES GENERATORS
PROJECT No. 501028
LANDSCAPE PLAN

CC-L-1

D-10117

Designed by:	AA	Reviewed By:	
Date:	12/15/2023	Gerard J. Nepomuceno, Civil Engineer, R.C.E. 93200	Date
Checked by:	AA/GM/JL	Approved By:	
Date:	12/18/2023	Goutam K. Dobey, City Engineer, R.C.E. 75646	Date
Drawn by:	AA/VB	Sheet 21 of 38 Sheets	
Date:	12/16/2023	Scale: Horiz. AS SHOWN	
Checked by:	AA	Vert. NONE	
Date:	12/19/2023		

C:\Users\vbova\Documents\Business\Consulting\2024\ALA\PROJECTS\Country Club Reservoir\Working CAD\CC-L-1 Landscape Plan.dwg | Plotted: 1/5/2024

PROPERTY LINE, TYP

CAUTION! OVERHEAD ELECTRICAL

EXIST CONC PAD, PROTECT IN PLACE

EXIST ACCESS GATE, PROTECT IN PLACE

EXIST VAULT, PROTECT IN PLACE

EXIST ABOVE GROUND PIPING, PROTECT IN PLACE

DEMO EXIST PUMP STATION ROOF PANELS

EXIST ABOVE GROUND PIPING, PROTECT IN PLACE

FIFTH AVENUE PUMP STATION

DEMO EXIST ASPHALT, TYP (APPROX 2400-SF)

EXIST PUMP STATION, PROTECT IN PLACE

DEMO EXIST MOTOR CONTROL CENTER (MCC)

DEMO EXIST PUMP STARTER PANELS

EXIST CHAIN LINK FENCE, PROTECT IN PLACE

EXIST PULL BOX, PROTECT IN PLACE

DEMO EXIST ELEC SERVICE METER/MAIN ENTRANCE SECTION SWITCHGEAR AND SLAB

EXIST TRANSFORMER, PROTECT IN PLACE

FIFTH AVENUE RESERVOIR

EXIST COUNTY MONITORING STATION, PROTECT IN PLACE

DEMO EXIST RETAINING WALL (APPROX 18-LF)

DEMO EXIST TREE, TYP (QUANTITY 10)

EXIST ACCESS GATE, PROTECT IN PLACE

UTILITY NOTE:

ATTENTION IS DIRECTED TO THE POSSIBLE EXISTENCE OF UNDERGROUND FACILITIES NOT KNOWN OR IN A LOCATION DIFFERENT FROM THAT WHICH IS NOTED ON THE PLANS OR IN THE SPECIAL PROVISIONS. THE CONTRACTOR SHALL TAKE STEPS TO ASCERTAIN THE EXACT LOCATION OF ALL UNDERGROUND FACILITIES PRIOR TO THE START OF ANY CONSTRUCTION AND TO PROTECT IN PLACE ALL SUCH FACILITIES FROM ANY DAMAGE OR INTERFERENCE WITH THEIR SERVICE AND BEFORE EXCAVATING, THE CONTRACTOR SHALL VERIFY THE LOCATION OF UNDERGROUND UTILITIES BY CONTACTING EACH OF THE FOLLOWING LISTED UTILITY COMPANIES:

- GAS & ELECTRIC: SCE
- WATER & SEWER: CITY OF REDLANDS

LEGEND

(5) ▶ PHOTO NUMBER, SEE SHEET FA-D-2

8' 0 8' 16'
1/8" = 1'-0"

SITE DEMO PLAN

SCALE : 1" = 8'-0"

DEMO NOTES:

1. REFER TO ELECTRICAL SHEETS FOR ADDITIONAL INFORMATION ON ELECTRICAL DEMO SCOPE.

LINE IS 2 INCHES AT FULL SIZE
IF NOT 2" – SCALE ACCORDINGLY

BRADY
Water • Power • Transportation
10089 Willow Creek Rd., Suite 375
San Diego, California 92131
P: 858.496.0500 - www.richardbrady.com

REGISTERED PROFESSIONAL ENGINEER GARRETT D. MURAKAMI C 90365 CIVIL STATE OF CALIFORNIA

08/28/2025

Letter	Description	Date	Initial	Initial
	Revisions			Approved by:

CITY OF REDLANDS
Municipal Utilities and Engineering Department

WATER FACILITIES GENERATORS
PROJECT No. 501028

SITE DEMO PLAN

FA-D-1

Designed by: GDM Date: 08/28/2025
Checked by: KCK Date: 08/28/2025
Drawn by: GDM Date: 08/28/2025
Checked by: KCK Date: 08/28/2025

Reviewed By: _____
Gerard J. Nepomuceno, Civil Engineer, R.C.E. 93200 Date
Approved By: _____
Goutam K. Dobey, City Engineer, R.C.E. 75646 Date

Sheet 22 of 38 Sheets
Scale: Horiz. AS SHOWN
Vert. NONE

D-10117

P:\VHB_South\REDLND\REDLND.006_Engineering and Design of Water Facilities Generators (No. 20230112VM)\4_EngDesign\2_Dwgs\6-Fifth Avenue PS\FA-D-1 SITE DEMO PLAN.dwg | Plotted: 8/28/2025

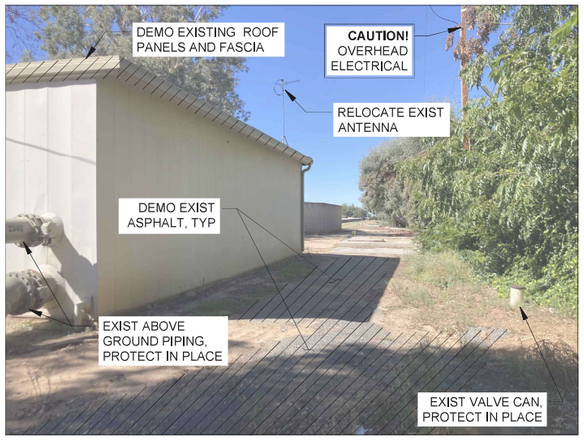

PUMP STATION NORTH SIDE (WEST) — 1

SCALE: NONE

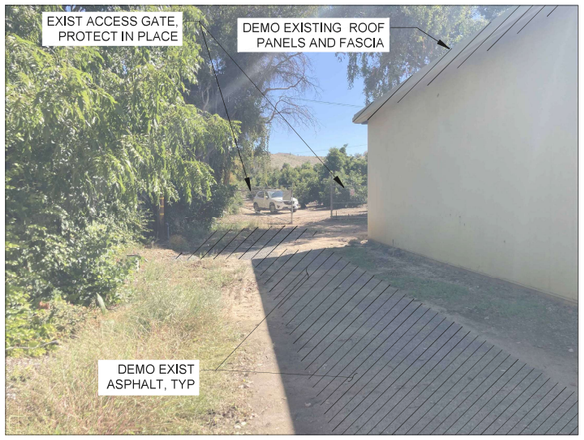

PUMP STATION NORTH SIDE (EAST) — 2

SCALE: NONE

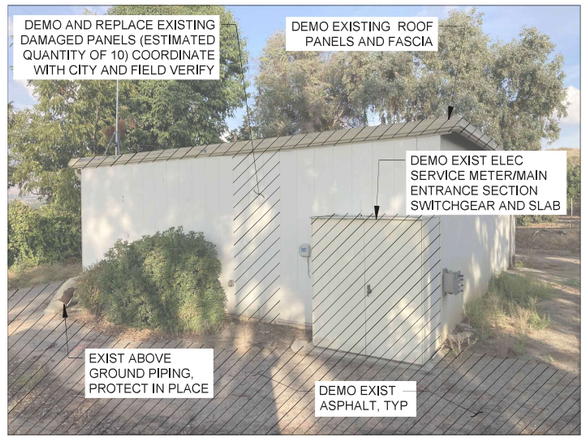

PUMP STATION WEST SIDE (NORTH) — 3

SCALE: NONE

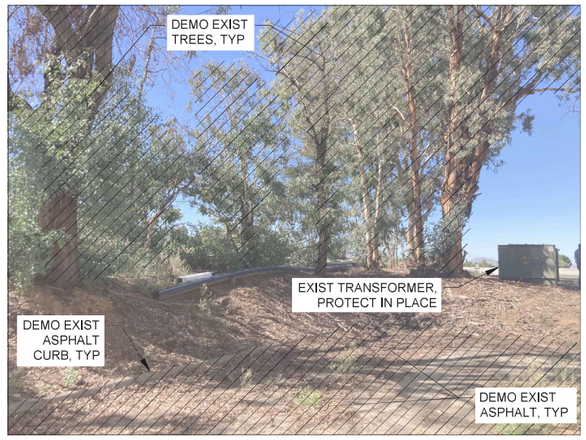

SOUTH SIDE OF PUMP STATION (WEST) — 4

SCALE: NONE

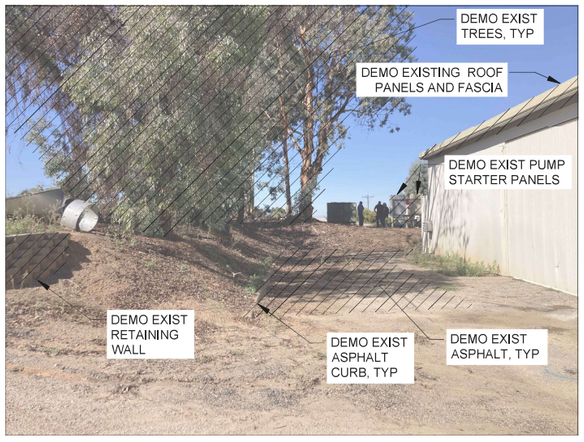

PUMP STATION SOUTH SIDE (WEST) — 5

SCALE: NONE

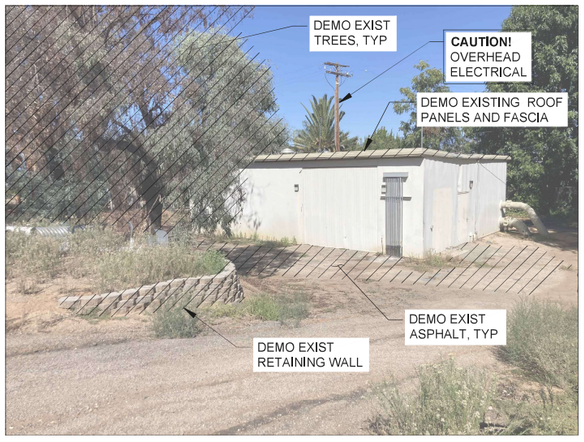

PUMP STATION SOUTH-EAST SIDE (NORTH) — 6

SCALE: NONE



PUMP STATION EAST SIDE (NORTH) — 7

SCALE: NONE



INSIDE PUMP STATION (WEST) — 8

SCALE: NONE



PUMP STATION SOUTH SIDE — 9

SCALE: NONE

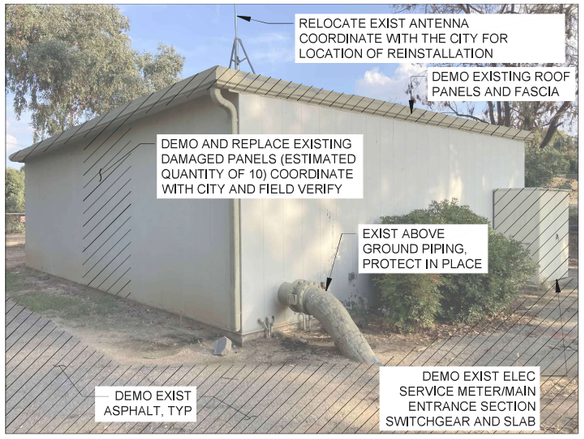

PUMP STATION NORTH-WEST SIDE — 10

SCALE: NONE

LINE IS 2 INCHES AT FULL SIZE
IF NOT 2" – SCALE ACCORDINGLY

BRADY
Water • Power • Transportation
10089 Willow Creek Rd., Suite 375
San Diego, California 92131
P: 858.496.0500 - www.richardbrady.com

REGISTERED PROFESSIONAL ENGINEER — GARRETT D. MUKAI — C 90365 — CIVIL — STATE OF CALIFORNIA

08/28/2025

Letter	Description	Date	Initial	Initial
	Revisions			Approved by:

CITY OF REDLANDS
Municipal Utilities and Engineering Department

WATER FACILITIES GENERATORS
PROJECT No. 501028

DEMO DETAILS

FA-D-2

D-10117

Designed by: GDM Date: 08/28/2025
Checked by: KCK Date: 08/28/2025
Drawn by: GDM Date: 08/28/2025
Checked by: KCK Date: 08/28/2025

Reviewed By: Gerard J. Nepomuceno, Civil Engineer, R.C.E. 93200 Date
Approved By: Goutam K. Dobey, City Engineer, R.C.E. 75646 Date

Sheet 23 of 38 Sheets
Scale: Horiz. AS SHOWN
Vert. NONE

P:\WHB_South\REDLND\REDLND.006_Engineering and Design of Water Facilities Generators (No. 20230112VW)\4_EngDesign\2_Dwgs\6-Fifth Avenue PS\FA-D-2 DEMO DETAILS.dwg | Plotted: 8/28/2025

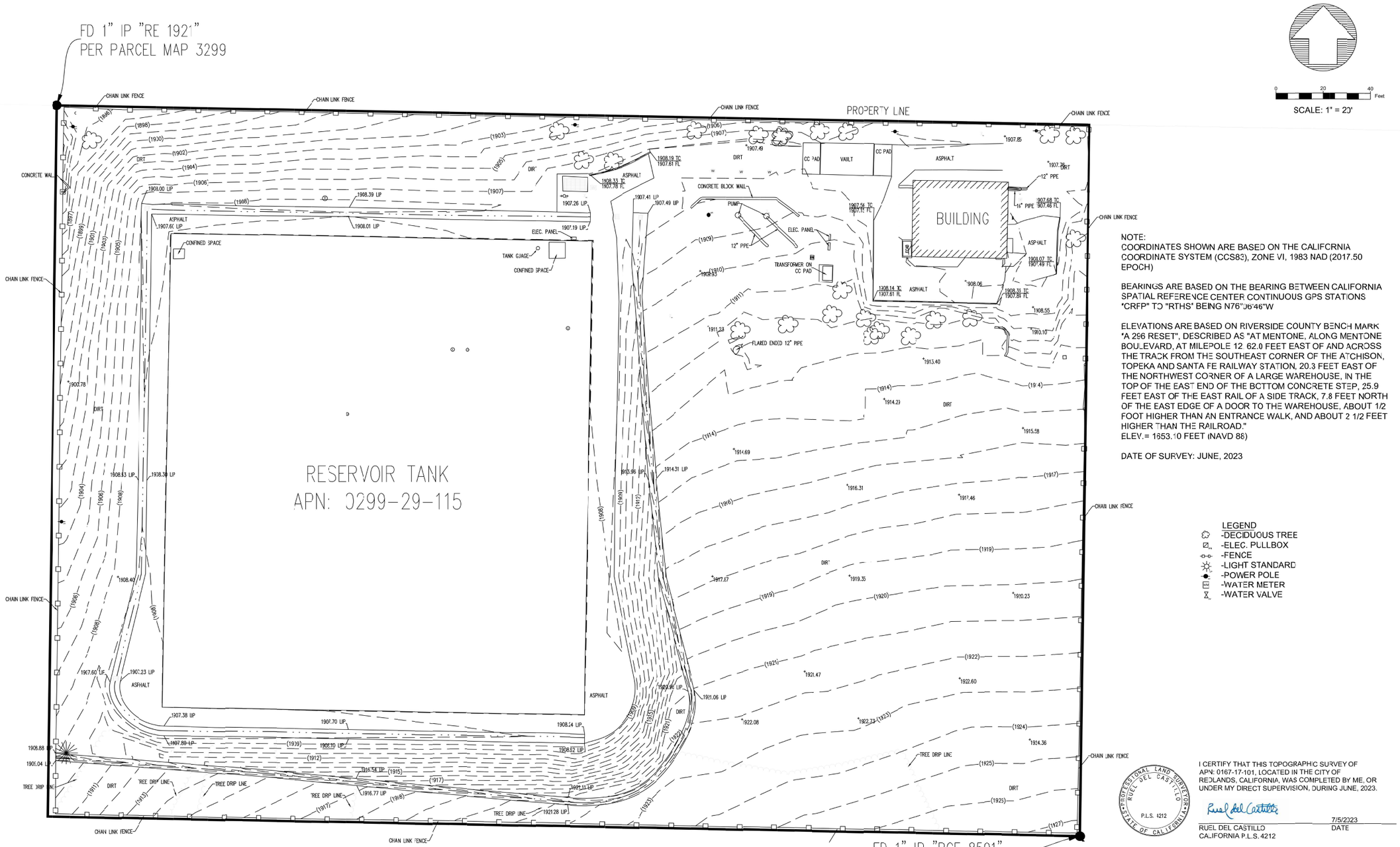

NOTE:
COORDINATES SHOWN ARE BASED ON THE CALIFORNIA COORDINATE SYSTEM (CCS83), ZONE VI, 1983 NAD (2017.50 EPOCH)

BEARINGS ARE BASED ON THE BEARING BETWEEN CALIFORNIA SPATIAL REFERENCE CENTER CONTINUOUS GPS STATIONS "CRFP" TO "RTHS" BEING N76°36'46"W

ELEVATIONS ARE BASED ON RIVERSIDE COUNTY BENCH MARK "A 296 RESET", DESCRIBED AS "AT MENTONE, ALONG MENTONE BOULEVARD, AT MILEPOLE 12 62.0 FEET EAST OF AND ACROSS THE TRACK FROM THE SOUTHEAST CORNER OF THE ATCHISON, TOPEKA AND SANTA FE RAILWAY STATION, 20.3 FEET EAST OF THE NORTHWEST CORNER OF A LARGE WAREHOUSE, IN THE TOP OF THE EAST END OF THE BOTTOM CONCRETE STEP, 25.9 FEET EAST OF THE EAST RAIL OF A SIDE TRACK, 7.8 FEET NORTH OF THE EAST EDGE OF A DOOR TO THE WAREHOUSE, ABOUT 1/2 FOOT HIGHER THAN AN ENTRANCE WALK, AND ABOUT 2 1/2 FEET HIGHER THAN THE RAILROAD."
ELEV.= 1853.10 FEET (NAVD 88)

DATE OF SURVEY: JUNE, 2023

LEGEND
-DECIDUOUS TREE
-ELEC. PULLBOX
-FENCE
-LIGHT STANDARD
-POWER POLE
-WATER METER
-WATER VALVE

I CERTIFY THAT THIS TOPOGRAPHIC SURVEY OF APN: 0167-17-101, LOCATED IN THE CITY OF REDLANDS, CALIFORNIA, WAS COMPLETED BY ME, OR UNDER MY DIRECT SUPERVISION, DURING JUNE, 2023.

PROFESSIONAL LAND SURVEYOR · RUEL DEL CASTILLO · P.L.S. 4212 · STATE OF CALIFORNIA

RUEL DEL CASTILLO
CALIFORNIA P.L.S. 4212

7/5/2023
DATE

BRADY
Water • Power • Transportation
10089 Willow Creek Rd., Suite 375
San Diego, California 92131
P: 858.496.0500 - www.richardbrady.com

08/28/2025

Letter	Description	Date	Initial	Initial
	Revisions		Approved by:	

LINE IS 2 INCHES AT FULL SIZE
IF NOT 2" – SCALE ACCORDINGLY

CITY OF REDLANDS
Municipal Utilities and Engineering Department

WATER FACILITIES GENERATORS
PROJECT No. 501028

EXISTING CONDITIONS SURVEY

FA-C-1

D-10117

Designed by: RDC
Date: 08/28/2025
Checked by: KCK
Date: 08/28/2025
Drawn by: GDM
Date: 08/28/2025
Checked by: KCK
Date: 08/28/2025

Reviewed By:
Gerard J. Nepomuceno, Civil Engineer, R.C.E. 93200 Date
Approved By:
Goutam K. Dobey, City Engineer, R.C.E. 75646 Date

Sheet 24 of 38 Sheets
Scale: Horiz. AS SHOWN
Vert. NONE

P:\VHB_South\REDLND\REDLND.006_Engineering and Design of Water Facilities Generators (No. 20230112VM)\4_EngDesign\2_Dwgs\6-Fifth Avenue PSY\FA-C-1 EXISTING CONDITIONS SURVEY.dwg | Plotted: 8/28/2025

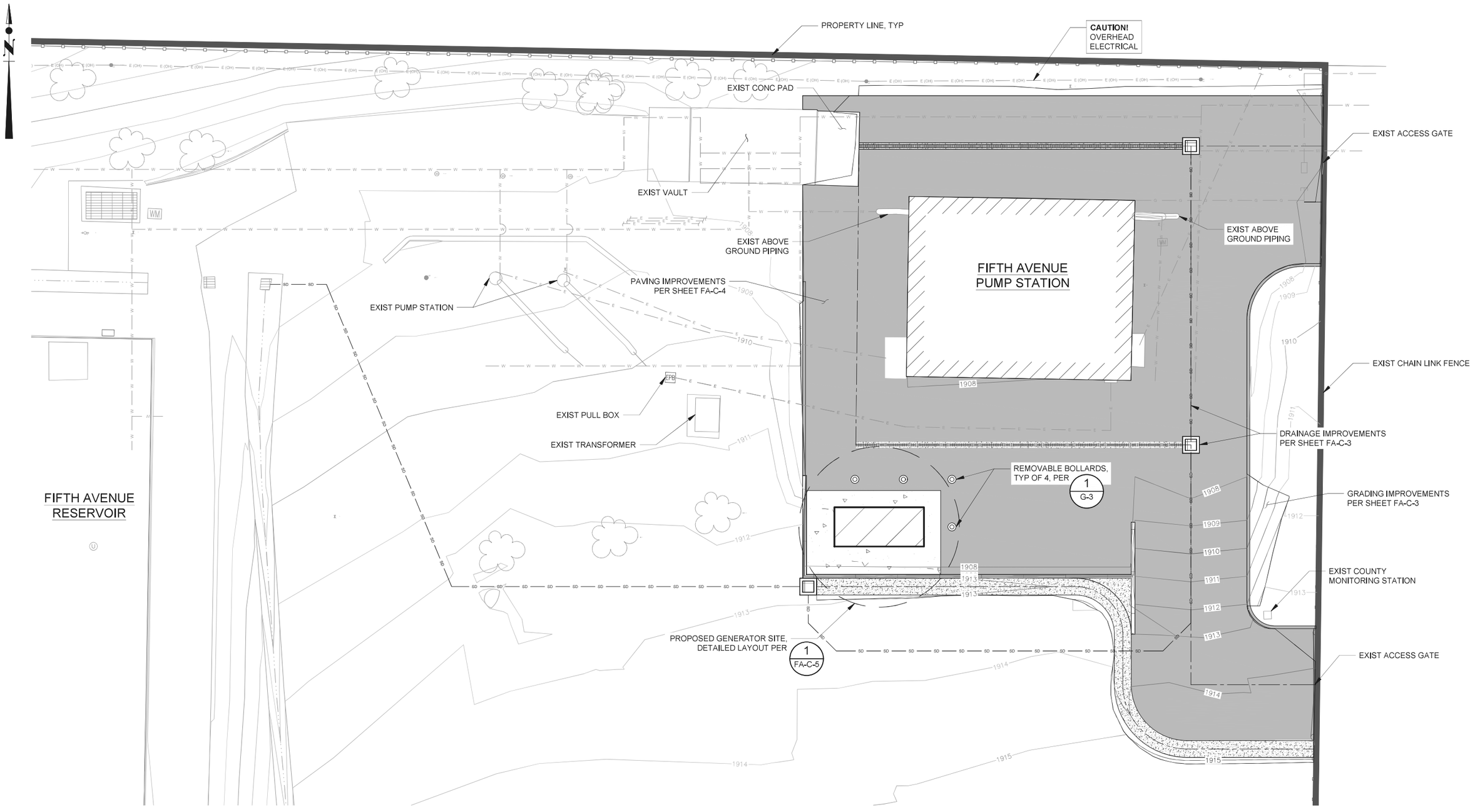

NOTES:

1. REFER TO SHEET FA-C-3 FOR GRADING AND DRAINAGE PLAN.
2. REFER TO SHEET FA-C-4 FOR PAVING PLAN.
3. REFER TO SHEETS FA-S-1 AND FA-S-2 FOR PUMP STATION STRUCTURAL REHABILITATION SCOPE OF WORK.
4. REFER TO SHEET FA-E-1 FOR ELECTRICAL SCOPE OF WORK.

8' 0 8' 16'
1/8" = 1'-0"

OVERALL SITE PLAN

SCALE : 1" = 8'-0"

LINE IS 2 INCHES AT FULL SIZE
IF NOT 2" – SCALE ACCORDINGLY

BRADY
Water • Power • Transportation
10089 Willow Creek Rd., Suite 375
San Diego, California 92131
P: 858.496.0500 - www.richardbrady.com

REGISTERED PROFESSIONAL ENGINEER GARRETT D. MURAKAMI C 90365 CIVIL STATE OF CALIFORNIA

08/28/2025

Letter	Description	Date	Initial	Initial
	Revisions		Approved by:	

CITY OF REDLANDS
Municipal Utilities and Engineering Department

WATER FACILITIES GENERATORS
PROJECT No. 501028

OVERALL SITE PLAN

FA-C-2

D-10117

Designed by: GDM Date: 08/28/2025
Checked by: KCK Date: 08/28/2025
Drawn by: GDM Date: 08/28/2025
Checked by: KCK Date: 08/28/2025

Reviewed By:
Gerard J. Nepomuceno, Civil Engineer, R.C.E. 93200 Date
Approved By:
Goutam K. Dobey, City Engineer, R.C.E. 75646 Date

Sheet 25 of 38 Sheets
Scale: Horiz. AS SHOWN
Vert. NONE

P:\VHB_South\REDLND\REDLND.006_Engineering and Design of Water Facilities Generators (No. 20230112VM)\4_EngDesign\2_Dwgs\6-Fifth Avenue PS\FA-C-2 OVERALL SITE PLAN.dwg | Plotted: 8/28/2025

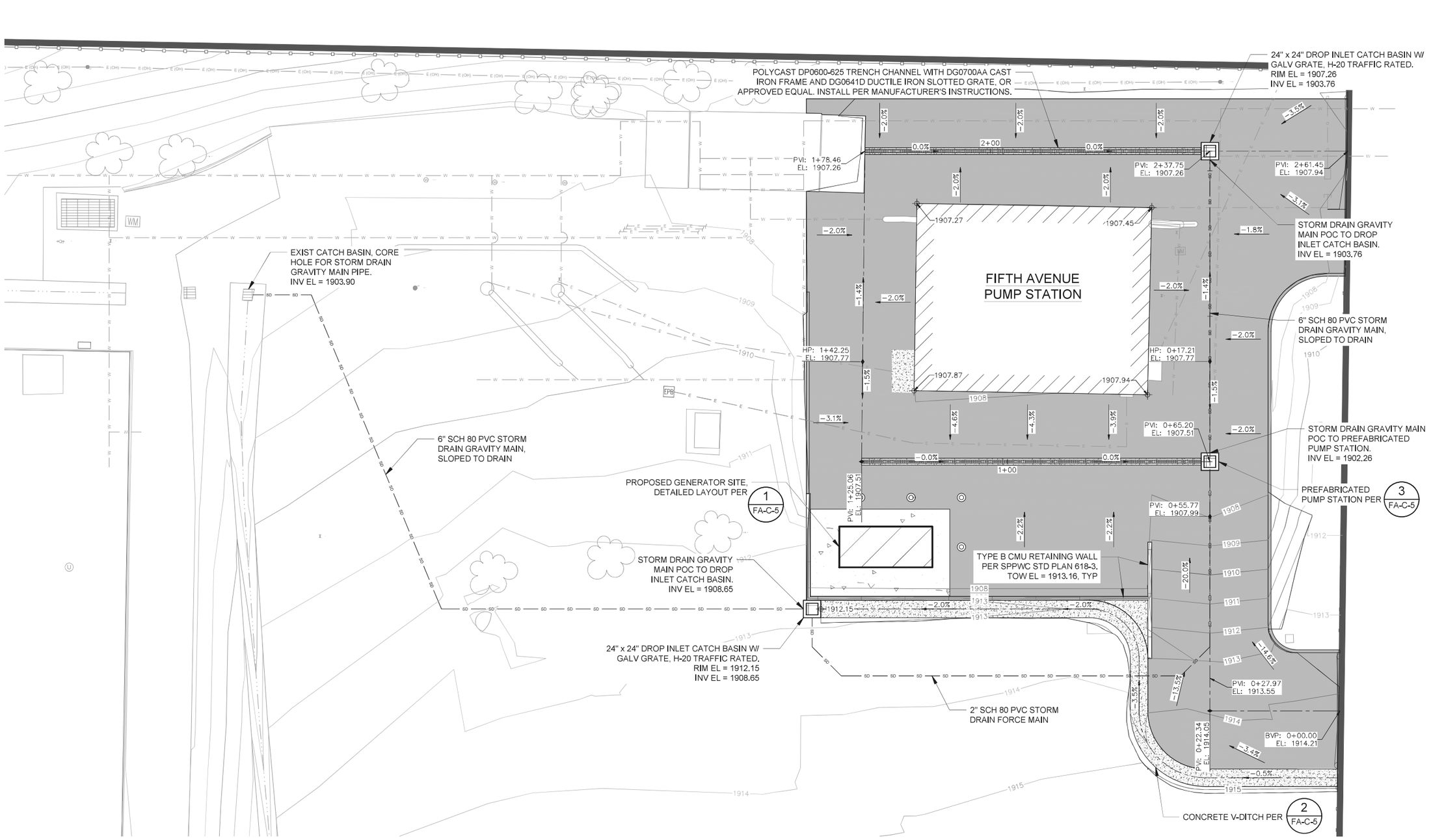

NOTES:

1. STORM DRAIN PIPING SHALL HAVE A MIN COVER OF 3' UON.
2. REFER TO SHEET FA-C-4 FOR PAVING PLAN.
3. REFER TO SHEET FA-E-1 FOR ELECTRICAL SCOPE OF WORK.

8' 0 8' 16'
1/8" = 1'-0"

GRADING AND DRAINAGE PLAN

SCALE : 1" = 8'-0"

LINE IS 2 INCHES AT FULL SIZE
IF NOT 2" – SCALE ACCORDINGLY

BRADY
Water • Power • Transportation
10089 Willow Creek Rd., Suite 375
San Diego, California 92131
P: 858.496.0500 - www.richardbrady.com

REGISTERED PROFESSIONAL ENGINEER GARRETT D. MURAWSKY C 90365 CIVIL STATE OF CALIFORNIA
08/28/2025

Letter	Description	Date	Initial	Initial
	Revisions		Approved by:	

CITY OF REDLANDS
Municipal Utilities and Engineering Department

WATER FACILITIES GENERATORS PROJECT No. 501028

GRADING AND DRAINAGE PLAN

FA-C-3

Designed by: GDM
Date: 08/28/2025
Checked by: KCK
Date: 08/28/2025
Drawn by: GDM
Date: 08/28/2025
Checked by: KCK
Date: 08/28/2025

Reviewed By:
Gerard J. Nepomuceno, Civil Engineer, R.C.E. 93200 Date
Approved By:
Goutam K. Dobey, City Engineer, R.C.E. 75646 Date

Sheet 26 of 38 Sheets
Scale: Horiz. AS SHOWN
Vert. NONE

D-10117

P:\WHB_South\REDLND\REDLND.006_Engineering and Design of Water Facilities Generators (No. 20230112VM)\4_EngDesign\2_Dwgs\6-Fifth Avenue PS\FA-C-3 GRADING AND DRAINAGE.dwg | Plotted: 8/28/2025

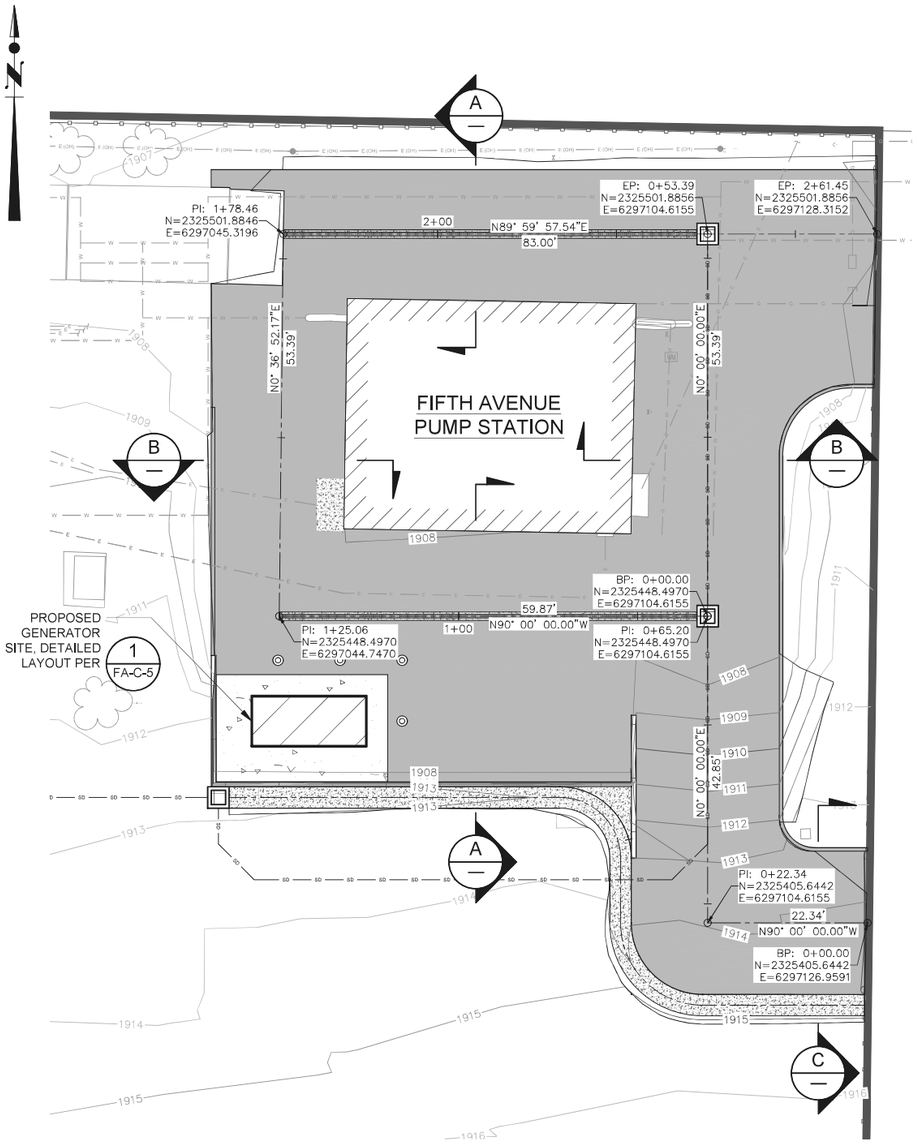

PAVING PLAN

SCALE : 1" = 10'-0"

10' 0 10' 20'

1" = 10'

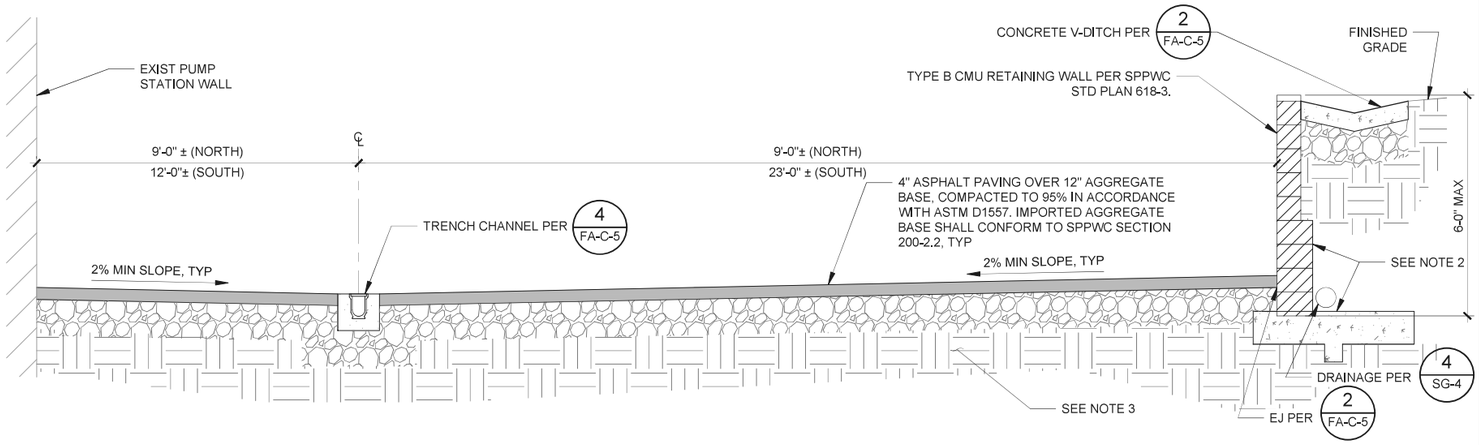

PERIMETER ROAD SECTION - NORTH/SOUTH

SCALE: NONE

A

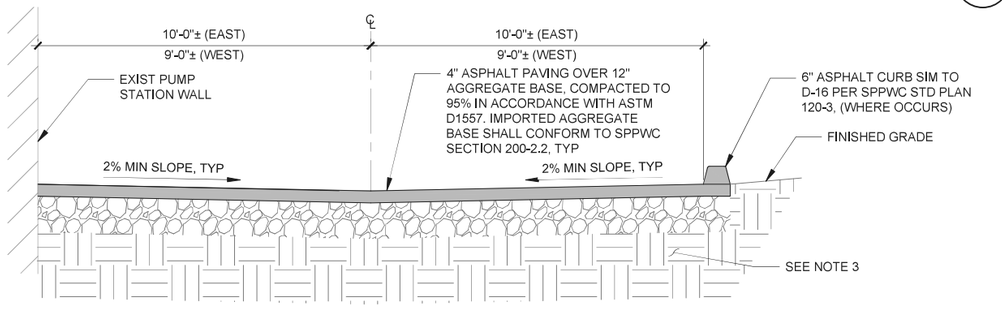

PERIMETER ROAD SECTION - EAST/WEST

SCALE: NONE

B

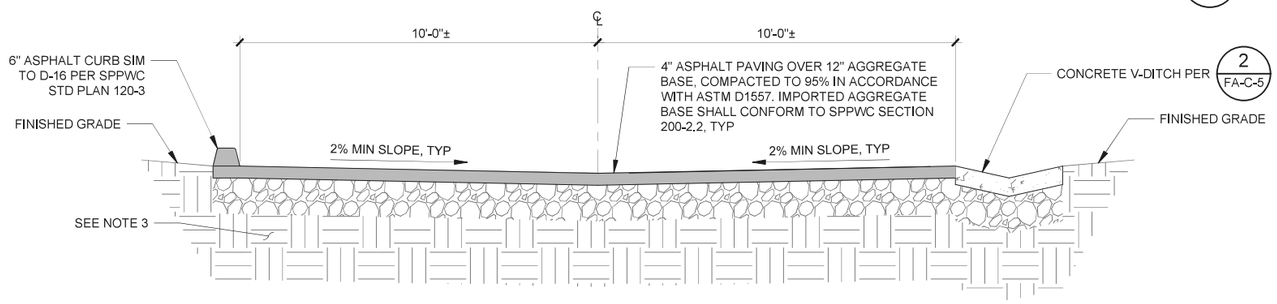

DRIVEWAY ROAD SECTION

SCALE: NONE

C

NOTES:

1. ASPHALT CONCRETE SHALL CONFORM TO SPPWC SECTION 203-6 AND COMPACTED TO BETWEEN 91% AND 97% OF THE MAXIMUM THEORETICAL DENSITY PER CALTRANS SECTION 39 REQUIREMENTS (CALTRANS TEST 309 ALSO KNOWN AS RICE SPECIFIC GRAVITY OR ASTM D2041).
2. APPLY SIKALASTIC - 320 NS WATERPROOFING, OR APPROVED EQUAL, IN ACCORDANCE WITH THE MANUFACTURER'S REQUIREMENTS TO RETAINING WALL SURFACES AND FOOTING BELOW GRADE.
3. OVER-EXCAVATE A MINIMUM OF 24" BELOW FINISHED SUBGRADE AND REPLACE WITH NATIVE SOIL AFTER SCREENING AND PROCESSING,PRIOR TO FILL, BOTTOM OF EXCAVATION SHALL BE CHECKED BY SPECIAL INSPECTOR IF DEEMED NOT SUITABLE, CONTRACTOR TO SUBMIT STRUCTURAL FILL IN ACCORDANCE WITH GREENBOOK. REMEDIAL GRADING SHALL EXTEND AT LEAST 5' BEYOND THE IMPROVEMENTS. BACKFILL SHALL BE PLACED AND COMPACTED AT OR SLIGHTLY ABOVE OPTIMUM MOISTURE CONTENT TO A MINIMUM RELATIVE COMPACTION OF 90% AND 95 % FOR PAVEMENT SECTIONS PER ASTM D1557.
4. REFER TO SHEET FA-C-3 FOR GRADING AND DRAINAGE PLAN.

LINE IS 2 INCHES AT FULL SIZE
IF NOT 2" – SCALE ACCORDINGLY

BRADY
Water • Power • Transportation
10089 Willow Creek Rd., Suite 375
San Diego, California 92131
P: 858.496.0500 - www.richardbrady.com

REGISTERED PROFESSIONAL ENGINEER
GARRETT D. MURRAY
C 90365
CIVIL
STATE OF CALIFORNIA

08/28/2025

Letter	Description	Date	Initial	Initial
	Revisions		Approved by:	

CITY OF REDLANDS
Municipal Utilities and Engineering Department

WATER FACILITIES GENERATORS
PROJECT No. 501028

PAVING PLAN

FA-C-4

Designed by: GDM
Date: 08/28/2025
Checked by: KCK
Date: 08/28/2025
Drawn by: GDM
Date: 08/28/2025
Checked by: KCK
Date: 08/28/2025

Reviewed By:
Gerard J. Nepomuceno, Civil Engineer, R.C.E. 93200 Date
Approved By:
Goutam K. Dobey, City Engineer, R.C.E. 75646 Date

Sheet 27 of 38 Sheets
Scale: Horiz. AS SHOWN
Vert. NONE

D-10117

P:\WHB_South\REDLND\REDLND.006_Engineering and Design of Water Facilities Generators (No. 20230112WM)\4_EngDesign\2_Dwgs\6-Fifth Avenue PS\FA-C-4 PAVING.dwg | Plotted: 6/28/2025

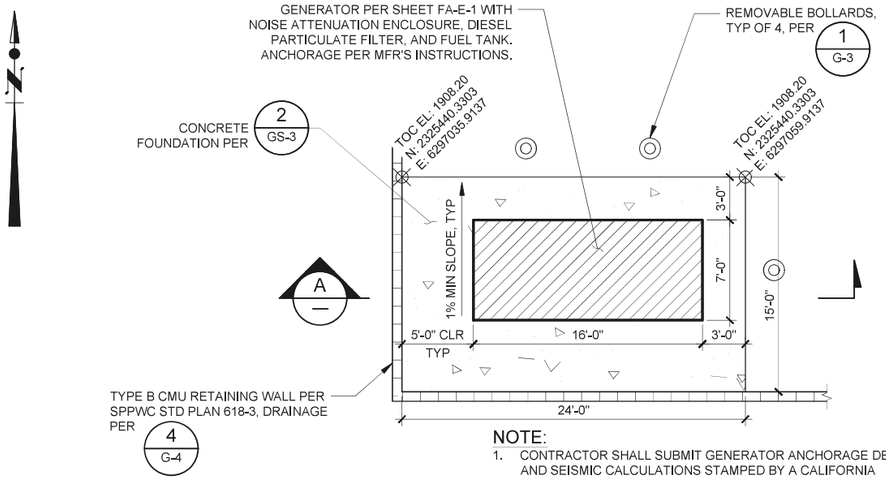

NOTE:
1. CONTRACTOR SHALL SUBMIT GENERATOR ANCHORAGE DESIGN AND SEISMIC CALCULATIONS STAMPED BY A CALIFORNIA LICENSED PROFESSIONAL ENGINEER FOR APPROVAL BY EOR.

GENERATOR ENCLOSURE PLAN

SCALE:1" = 5'-0"

1

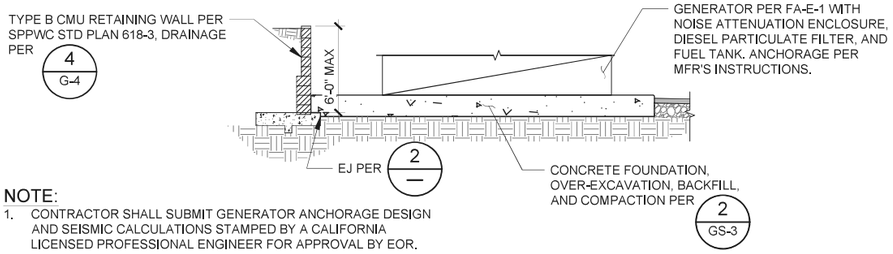

NOTE:
1. CONTRACTOR SHALL SUBMIT GENERATOR ANCHORAGE DESIGN AND SEISMIC CALCULATIONS STAMPED BY A CALIFORNIA LICENSED PROFESSIONAL ENGINEER FOR APPROVAL BY EOR.

GENERATOR ENCLOSURE SECTION

SCALE:1" = 5'-0"

A

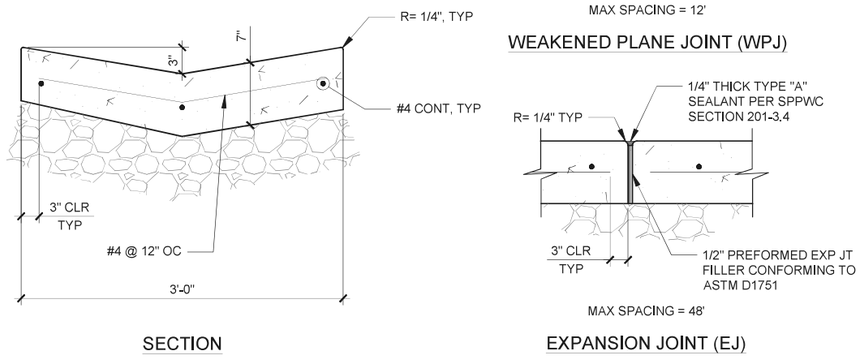

TYPICAL CONCRETE V-DITCH

SCALE: NONE

2

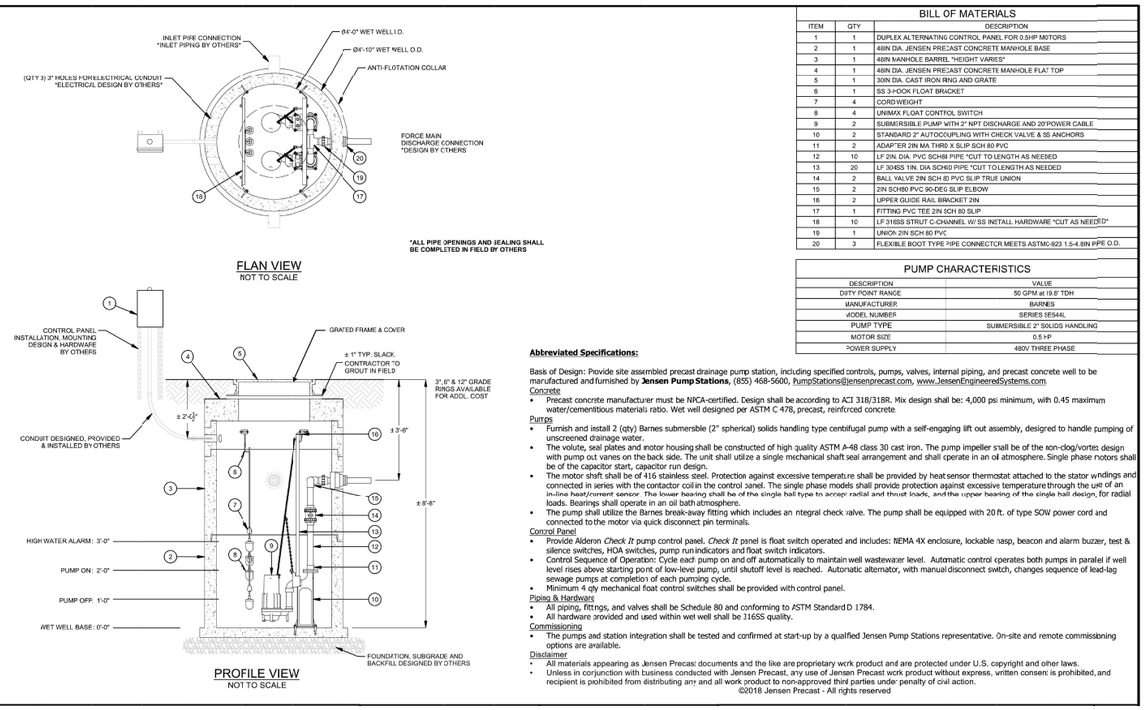

BILL OF MATERIALS		
ITEM	QTY	DESCRIPTION
1	1	DUPLEX ALTERNATING CONTROL PANEL FOR 0.5HP MOTORS
2	1	48IN DIA. JENSEN PRECAST CONCRETE MANHOLE BASE
3	1	48IN MANHOLE BARREL "HEIGHT VARIES"
4	1	48IN DIA. JENSEN PRECAST CONCRETE MANHOLE FLAT TOP
5	1	30IN DIA. CAST IRON RING AND GRATE
6	1	SS 3-HOOK FLOAT BRACKET
7	4	CORD WEIGHT
8	4	UNIMAX FLOAT CONTROL SWITCH
9	2	SUBMERSIBLE PUMP WITH 2" NPT DISCHARGE AND 20'POWER CABLE
10	2	STANDARD 2" AUTOCOUPLING WITH CHECK VALVE & SS ANCHORS
11	2	ADAPTER 2IN MA THRD X SLIP SCH 80 PVC
12	10	LF 2IN. DIA. PVC SCH80 PIPE *CUT TO LENGTH AS NEEDED
13	20	LF 304SS 1IN. DIA SCH80 PIPE *CUT TO LENGTH AS NEEDED
14	2	BALL VALVE 2IN SCH 80 PVC SLIP TRUE UNION
15	2	2IN SCH80 PVC 90-DEG SLIP ELBOW
16	2	UPPER GUIDE RAIL BRACKET 2IN
17	1	FITTING PVC TEE 2IN SCH 80 SLIP
18	10	LF 316SS STRUT C-CHANNEL W/ SS INSTALL HARDWARE *CUT AS NEEDED*
19	1	UNION 2IN SCH 80 PVC
20	3	FLEXIBLE BOOT TYPE PIPE CONNECTOR MEETS ASTMC-923 1.5-4.8IN PIPE O.D.

PUMP CHARACTERISTICS	
DESCRIPTION	VALUE
DUTY POINT RANGE	50 GPM at 19.8' TDH
MANUFACTURER	BARNES
MODEL NUMBER	SERIES SE544L
PUMP TYPE	SUBMERSIBLE 2" SOLIDS HANDLING
MOTOR SIZE	0.5 HP
POWER SUPPLY	480V THREE PHASE

Abbreviated Specifications:

Basis of Design: Provide site assembled precast drainage pump station, including specified controls, pumps, valves, internal piping, and precast concrete well to be manufactured and furnished by **Jensen Pump Stations**, (855) 468-5600, PumpStations@jensenprecast.com, www.JensenEngineeredSystems.com

Concrete
- Precast concrete manufacturer must be NPCA-certified. Design shall be according to ACI 318/318R. Mix design shall be: 4,000 psi minimum, with 0.45 maximum water/cementitious materials ratio. Wet well designed per ASTM C 478, precast, reinforced concrete.

Pumps
- Furnish and install 2 (qty) Barnes submersible (2" spherical) solids handling type centrifugal pump with a self-engaging lift out assembly, designed to handle pumping of unscreened drainage water.
- The volute, seal plates and motor housing shall be constructed of high quality ASTM A-48 class 30 cast iron. The pump impeller shall be of the non-clog/vortex design with pump out vanes on the back side. The unit shall utilize a single mechanical shaft seal arrangement and shall operate in an oil atmosphere. Single phase motors shall be of the capacitor start, capacitor run design.
- The motor shall be of 416 stainless steel. Protection against excessive temperature shall be provided by heat sensor thermostat attached to the stator windings and connected in series with the contactor coil in the control panel. The single phase models shall provide protection against excessive temperature through the use of an in-line heat/current sensor. The lower bearing shall be of the single ball type to accept radial and thrust loads, and the upper bearing of the single ball design, for radial loads. Bearings shall operate in an oil bath atmosphere.
- The pump shall utilize the Barnes break-away fitting which includes an integral check valve. The pump shall be equipped with 20 ft. of type SOW power cord and connected to the motor via quick disconnect pin terminals.

Control Panel
- Provide Alderon *Check It* pump control panel. *Check It* panel is float switch operated and includes: NEMA 4X enclosure, lockable hasp, beacon and alarm buzzer, test & silence switches, HOA switches, pump run indicators and float switch indicators.
- Control Sequence of Operation: Cycle each pump on and off automatically to maintain wet well wastewater level. Automatic control operates both pumps in parallel if well level rises above starting point of low-level pump, until shutoff level is reached. Automatic alternator, with manual disconnect switch, changes sequence of lead-lag sewage pumps at completion of each pumping cycle.
- Minimum 4 qty mechanical float control switches shall be provided with control panel.

Piping & Hardware
- All piping, fittings, and valves shall be Schedule 80 and conforming to ASTM Standard D 1784.
- All hardware provided and used within wet well shall be 316SS quality.

Commissioning
- The pumps and station integration shall be tested and confirmed at start-up by a qualified Jensen Pump Stations representative. On-site and remote commissioning options are available.

Disclaimer
- All materials appearing as Jensen Precast documents and the like are proprietary work product and are protected under U.S. copyright and other laws.
- Unless in conjunction with business conducted with Jensen Precast, any use of Jensen Precast work product without express, written consent is prohibited, and recipient is prohibited from distributing any and all work product to non-approved third parties under penalty of civil action.
©2018 Jensen Precast - All rights reserved

NOTES:
1. BASIS OF DESIGN FOR PREFABRICATED PUMP STATION BY JENSEN PUMP STATIONS, (855) 468-5600, WWW.JENSENENGINEEREDSYSTEMS.COM.
2. PUMP STATION SHALL BE AS SHOWN, OR APPROVED EQUAL. CONTRACTOR SHALL SUBMIT PUMP STATION DESIGN TO EOR FOR APPROVAL.
3. 24" BELOW SUBGRADE SHALL BE REMOVED AND REPLACED WITH ENGINEERED FILL.
4. GRADING SHALL EXTEND 5' BEYOND IMPROVEMENTS, UON.
5. SEE SPECIFICATIONS FOR COMPACTION REQUIREMENTS.

PREFABRICATED PUMP STATION

SCALE: NONE

3

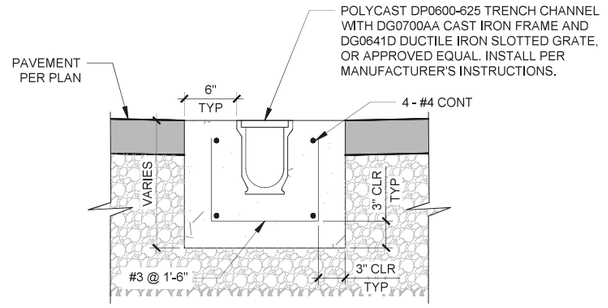

TRENCH CHANNEL REINFORCEMENT

SCALE: NONE

4

BRADY
Water • Power • Transportation
10089 Willow Creek Rd., Suite 375
San Diego, California 92131
P: 858.496.0500 - www.richardbrady.com

REGISTERED PROFESSIONAL ENGINEER GARRETT D. MURAWSKY C 90365 CIVIL STATE OF CALIFORNIA
08/28/2025

CITY OF REDLANDS
Municipal Utilities and Engineering Department

WATER FACILITIES GENERATORS
PROJECT No. 501028

SITE DETAILS

FA-C-5

D-10117

Letter	Description	Date	Initial	Initial
	Revisions		Approved by:	

LINE IS 2 INCHES AT FULL SIZE
IF NOT 2" – SCALE ACCORDINGLY

Designed by: GDM Date: 08/28/2025
Checked by: KCK Date: 08/28/2025
Drawn by: GDM Date: 08/28/2025
Checked by: KCK Date: 08/28/2025

Reviewed By:
Gerard J. Nepomuceno, Civil Engineer, R.C.E. 93200 Date
Approved By:
Goutam K. Dobey, City Engineer, R.C.E. 75646 Date

Sheet 28 of 38 Sheets
Scale: Horiz. AS SHOWN
Vert. NONE

P:\WHB_South\REDLND\REDLND.006_Engineering and Design of Water Facilities Generators (No. 20230112WM)\4_EngDesign\2_Dwgs\6-Fifth Avenue PS\FA-C-5 SITE DETAILS.dwg | Plotted: 8/28/2025

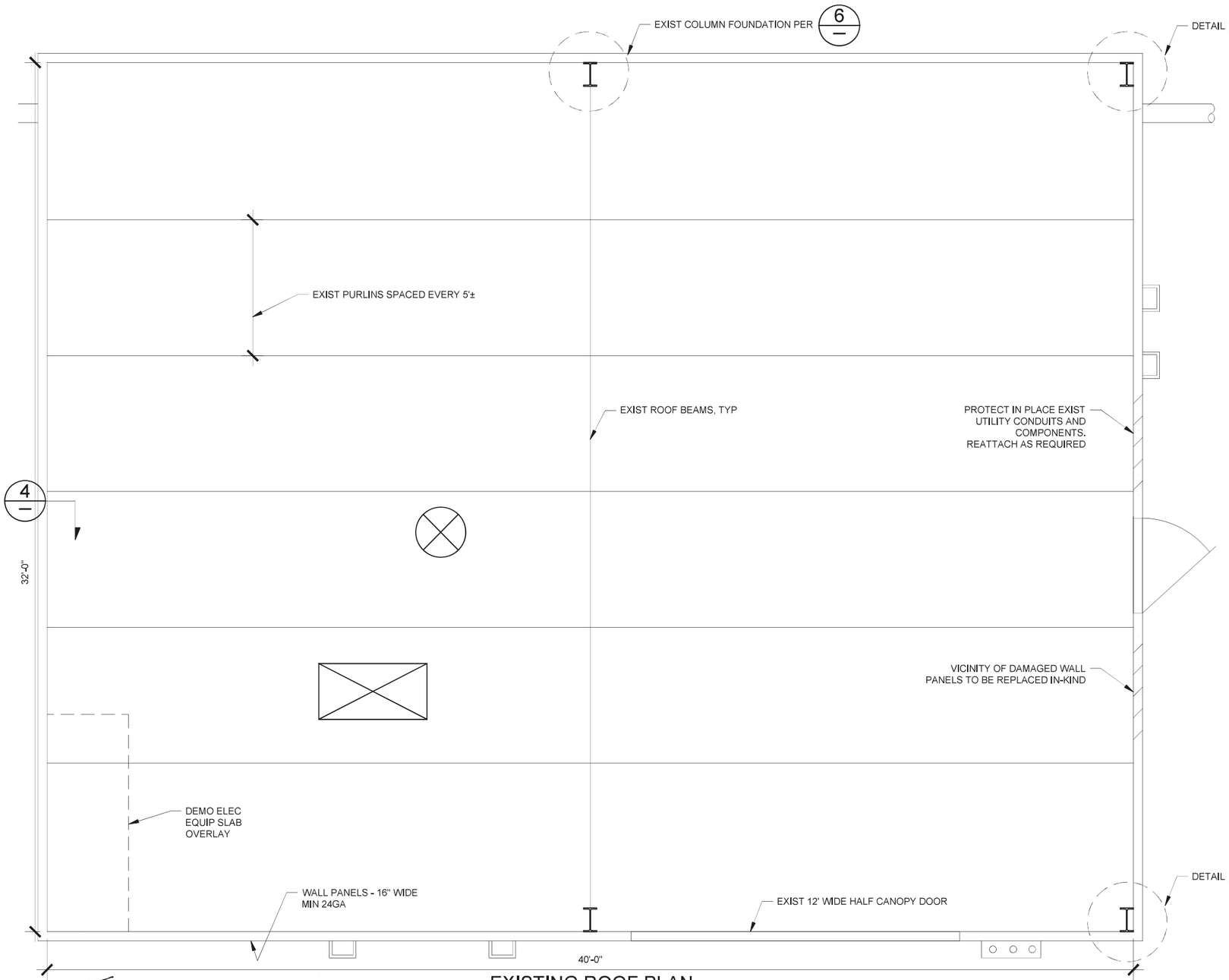

EXISTING ROOF PLAN

SCALE: NONE

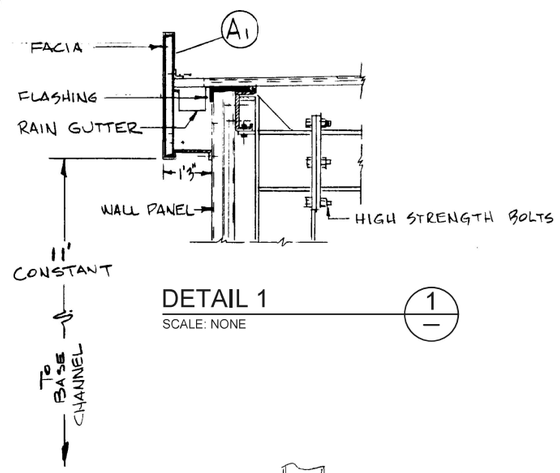

DETAIL 1 — 1/—

SCALE: NONE

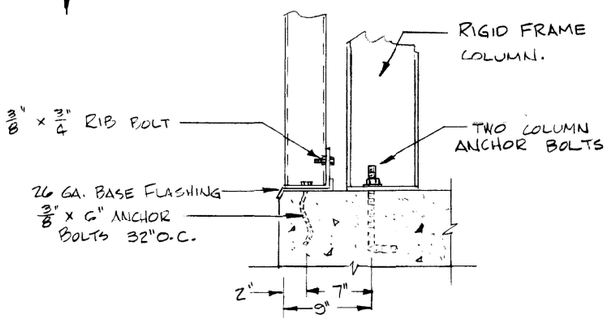

FOUNDATION DETAIL — 2/—

SCALE: NONE

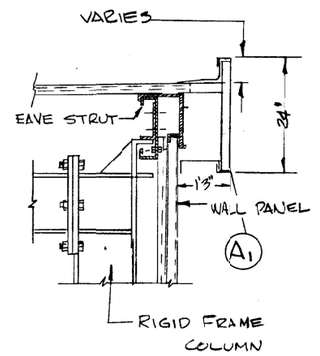

DETAIL 3 — 3/—

SCALE: NONE

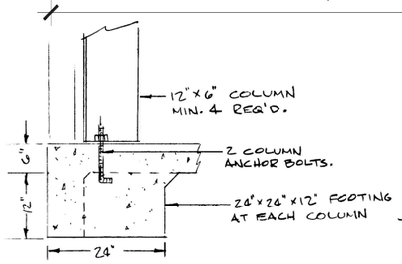

TYPICAL COLUMN FOOTING

DETAIL 6 — 6/—

SCALE: NONE

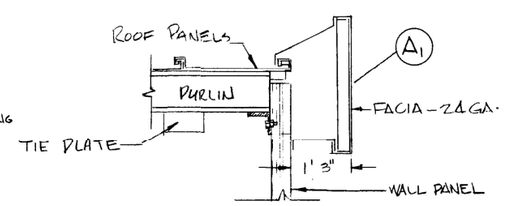

DETAIL 4 — 4/—

SCALE: NONE

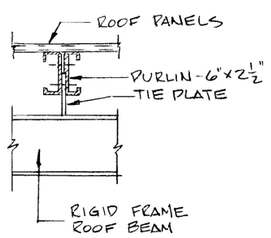

TYPICAL ROOF SECTION — 5/—

SCALE: NONE

LINE IS 2 INCHES AT FULL SIZE IF NOT 2" — SCALE ACCORDINGLY

BRADY
Water • Power • Transportation

10089 Willow Creek Rd., Suite 375
San Diego, California 92131
P: 858.496.0500 - www.richardbrady.com

REGISTERED PROFESSIONAL ENGINEER — KARL C. KUEBLER — No. 67975 — CIVIL — STATE OF CALIFORNIA

08/28/2025

Letter	Description	Date	Initial	Initial
	Revisions			Approved by:

CITY OF REDLANDS
Municipal Utilities and Engineering Department

WATER FACILITIES GENERATORS
PROJECT No. 501028

PUMP STATION - EXISTING CONDITION

Designed by: KCK	Date: 08/28/2025	Reviewed By:	
Checked by: ADB	Date: 08/28/2025	Gerard J. Nepomuceno, Civil Engineer, R.C.E. 93200	Date
Drawn by: GM	Date: 08/28/2025	Approved By:	
Checked by: ADB	Date: 08/28/2025	Goutam K. Dobey, City Engineer, R.C.E. 75646	Date
Sheet 29 of 38 Sheets	Scale: Horiz. AS SHOWN Vert. NONE		

FA-S-1

D-10117

P:\WHB_South\REDLND\REDLND.006_Engineering and Design of Water Facilities Generators (No. 20230112WM)\4_EngDesign\2_Dwgs\6-Fifth Avenue PS\FA-S-1 EXISTING PLAN.dwg | Plotted: 8/28/2025

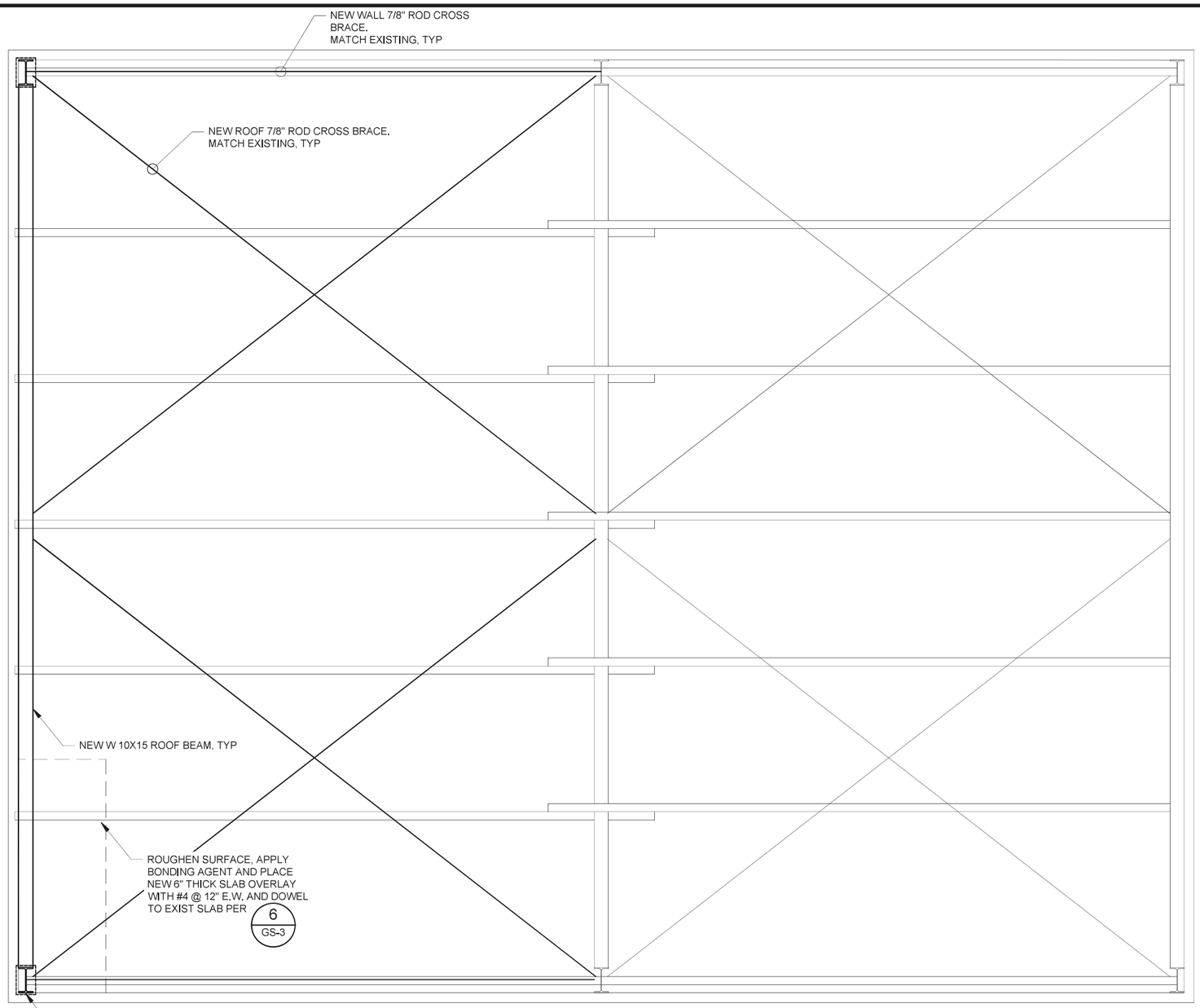

ROOF PLAN

SCALE : NONE

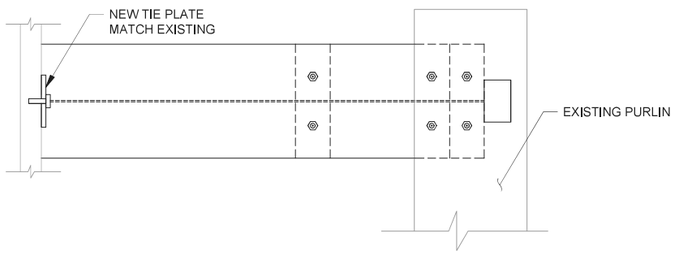

DETAIL 2

SCALE: NONE 2

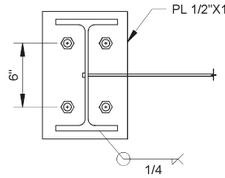

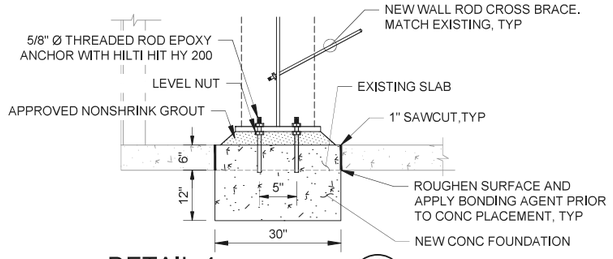

DETAIL 4

SCALE: NONE 1

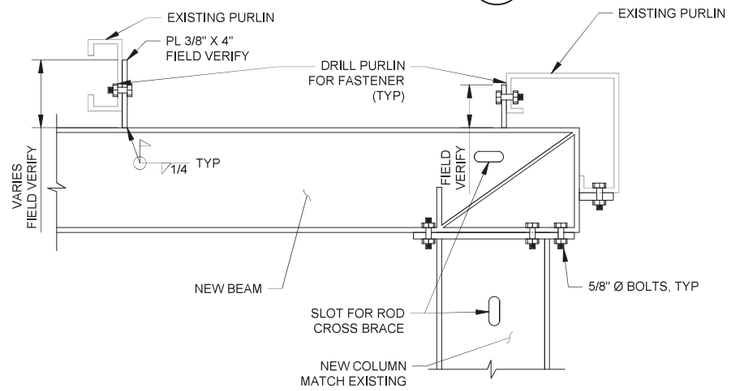

DETAIL 3

SCALE: NONE 3

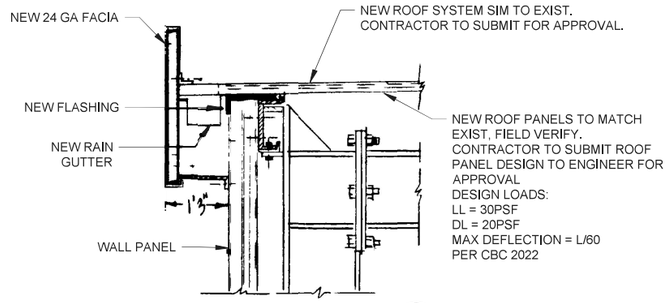

DETAIL 4

SCALE: NONE 4

LINE IS 2 INCHES AT FULL SIZE
IF NOT 2" – SCALE ACCORDINGLY

Letter	Description	Date	Initial	Initial
	Revisions			Approved by:

BRADY
Water • Power • Transportation
10089 Willow Creek Rd., Suite 375
San Diego, California 92131
P: 858.496.0500 - www.richardbrady.com

REGISTERED PROFESSIONAL ENGINEER KARL C. KUEBLER No. 67975 CIVIL STATE OF CALIFORNIA
08/28/2025

CITY OF REDLANDS
Municipal Utilities and Engineering Department

WATER FACILITIES GENERATORS
PROJECT No. 501028

PUMP STATION - PROPOSED REPAIRS

FA-S-2

D-10117

Designed by:	KCK	Reviewed By:	
Date:	08/28/2025	Gerard J. Nepomuceno, Civil Engineer, R.C.E. 93200	Date
Checked by:	ADB	Approved By:	
Date:	08/28/2025	Goutam K. Dobey, City Engineer, R.C.E. 75646	Date
Drawn by:	GM	Sheet 30 of 38 Sheets	
Date:	08/28/2025	Scale: Horiz. AS SHOWN	
Checked by:	ADB	Vert. NONE	
Date:	08/28/2025		

P:\VHB_South\REDLND\REDLND.006_Engineering and Design of Water Facilities Generators (No. 20230112VM)\4_EngDesign\2_Dwgs\6-Fifth Avenue PS\FA-S-2 STEEL INSTALATION PLAN.dwg | Plotted: 8/28/2025

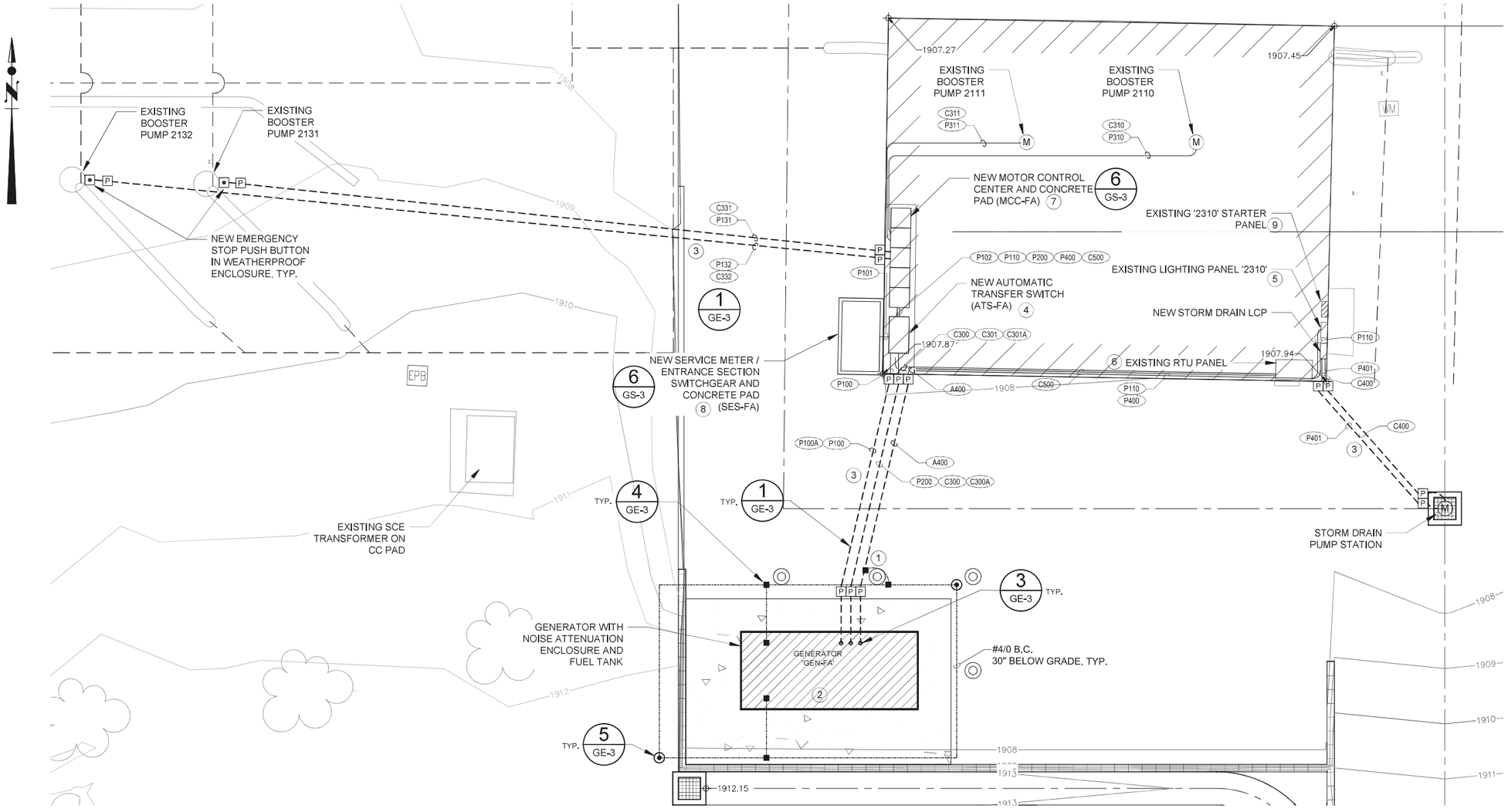

ENLARGED ELECTRICAL SITE PLAN 1

SCALE:1" = 5'-0"

5' 0 5' 10'
1" = 5'

GENERAL NOTES:

1. COORDINATE NEW CONDUIT AND WIRE TO NEW PANEL LOCATIONS AS REQUIRED FOR A COMPLETE AND FULLY OPERATIONAL SYSTEM.
2. THE PLANS DO NOT ALWAYS SHOW RACEWAYS AND CONDUCTORS BETWEEN RECEPTACLES, LIGHTING FIXTURES AND SWITCHES. HOWEVER, FURNISH AND INSTALL THESE CONNECTIONS IN ACCORDANCE WITH THE ASSIGNED FIXTURE OR RECEPTACLE CIRCUIT NUMBER AND SWITCH DESIGNATIONS. HOMERUN SHOWN CONCEALED SHALL BE INDICATIVE OF THE ENTIRE CIRCUIT INSTALLATION. THE SAME SHALL APPLY FOR HOMERUNS SHOWN EXPOSED. REFER TO SPECIFICATIONS FOR MATERIALS AND INSTALLATION REQUIREMENTS.
3. MAINTAIN AT LEAST 3'-0" IN FRONT OF ELECTRICAL EQUIPMENT PER NEC ARTICLE NO. 110.
4. ALL EQUIPMENT SHALL BE GROUNDED. PROVIDE A COMPLETE GROUNDING SYSTEM IN ACCORDANCE WITH ARTICLE 250 OF THE NEC.
5. CONDUIT ROUTING AND WALL PENETRATIONS SHOWN DIAGRAMMATICALLY. EXACT ROUTING SHALL BE COORDINATED IN THE FIELD.
6. SWITCHES SHALL BE MOUNTED 4'-0" ABOVE FINISHED FLOOR UNLESS NOTED OTHERWISE. RECEPTACLES SHALL BE MOUNTED AT 3'-0" ABOVE FINISHED FLOOR UNLESS NOTED OTHERWISE.
7. SEE DRAWING FA-E-2 FOR CONDUIT AND WIRE SCHEDULE.
8. PROVIDE REDLINE MARKUPS FOR AS-BUILT CONDUIT ROUTING.
9. ALL CONDUITS SHALL BE CONCEALED UNLESS OTHERWISE NOTED OR APPROVED BY THE ENGINEER.

KEY NOTES:

1. ENSURE DUCTBANK GROUND CONDUCTORS ARE EXOTHERMICALLY BONDED TO THE GROUNDING ELECTRODE SYSTEM.
2. REFERENCE SHEETS GS-3 AND FA-C-2 FOR EQUIPMENT PAD MOUNTING DETAIL AND ADDITIONAL GENERATOR MOUNTING INFORMATION.
3. ALL CONCRETE ENCASED CONDUIT TO BE PVC SCHEDULE 80 CONDUIT, UNLESS NOTED OTHERWISE. CONTRACTOR TO VERIFY ANY EXISTING PIPING IN PROPOSED DUCT BANK LOCATION PRIOR TO TRENCHING.
4. REMOVE EXISTING AUTOMATIC TRANSFER SWITCH AND INSTALL NEW AUTOMATIC TRANSFER SWITCH AS SHOWN. SEE SHEET FA-E-2 FOR ADDITIONAL ATS AND CONNECTION INFORMATION.
5. EXISTING 120/240V LIGHTING PANEL '2310' TO BE FED FROM NEW LIGHTING PANEL '2311' LOCATED IN NEW MCC AS SHOWN ON SHEET FA-E-2. INSTALL NEW CONDUIT AND CONDUCTORS AS SHOWN IN CIRCUIT SCHEDULE ON SHEET FA-E-2.
6. EXISTING SCADA RTU CABINET (RTU-400). TERMINATE ALL CONTROL AND 4-20MA ANALOG SIGNAL WIRE IN EXISTING RTU CABINET. COORDINATE THE GENERATOR CONTROL AND SIGNAL REQUIREMENTS WITH THE CITY OF REDLANDS. ALL PROGRAMMING BY OTHERS.
   SEE DETAIL #6 ON SHEET GE-3 FOR GENERATOR I/O CONNECTION DIAGRAM.
7. REMOVE EXISTING MOTOR CONTROL CENTER AND INSTALL NEW 480V, 3Ø, 3W, 600A, NEMA 3R MOTOR CONTROL CENTER. NEW MCC WILL CONTAIN A 30kVA TRANSFORMER AND LIGHTING PANEL, BREAKERS, STARTERS, PUSH BUTTONS, ETC., FOR ALL OF THE FOUR PUMPS ON SITE AND ADDITIONAL SPACE FOR A FUTURE PUMP. SEE SHEET FA-E-2 FOR ADDITIONAL MCC INFORMATION. EXTEND CURRENT CONCRETE HOUSEKEEPING PAD AS REQUIRED FOR NEW MCC.

KEY NOTES (CONTINUED):

8. REMOVE EXISTING SERVICE ENTRANCE / METER SECTION AND INSTALL NEW 1200A, 480/277V, 3Ø, 4W, NEMA 3R SERVICE ENTRANCE / METER SECTION SWITCHGEAR INSIDE OUTDOOR RATED NEMA 3R ENCLOSURE. RE-TERMINATE THE EXISTING SERVICE CONDUCTORS FROM THE EXISTING SCE TRANSFORMER AS REQUIRED.
9. EXISTING PUMP '2310' STARTER PANEL IS TO BE RELOCATED TO 'MCC-FA'. REMOVE EXISTING STARTER PANEL AND REWIRE PUMP '2310' AS SHOWN ON PLAN. REFER TO SHEET FA-E-2 FOR ADDITIONAL CONDUIT AND CONDUCTOR INFORMATION.

LINE IS 2 INCHES AT FULL SIZE
IF NOT 2" – SCALE ACCORDINGLY

Letter	Description	Date	Initial	Initial
	Revisions			Approved by:

BRADY
Water • Power • Transportation
10089 Willow Creek Rd., Suite 375
San Diego, California 92131
P: 858.496.0500 - www.richardbrady.com

REGISTERED PROFESSIONAL ENGINEER RYAN S. NISHIMURA No. 20050 ELECTRICAL STATE OF CALIFORNIA
08/28/2025

CITY OF REDLANDS
Municipal Utilities and Engineering Department

WATER FACILITIES GENERATORS
PROJECT No. 501028

FIFTH AVE ELECTRICAL SITE PLAN

FA-E-1

Designed by: CCW	Date: 08/28/2025	Reviewed By:	
Checked by: RSN	Date: 08/28/2025	Gerard J. Nepomuceno, Civil Engineer, R.C.E. 93200	Date
Drawn by: CCW	Date: 08/28/2025	Approved By:	
Checked by: RSN	Date: 08/28/2025	Goutam K. Dobey, City Engineer, R.C.E. 75646	Date

Sheet 31 of 38 Sheets
Scale: Horiz. AS SHOWN
Vert. NONE

D-10117

P:\WHB_South\REDLND\REDLND.006_Engineering and Design of Water Facilities Generators (No. 20230112WM)\4_EngDesign\2_Dwgs\6-Fifth Avenue PS\FA-E-1 ELECTRICAL SITE PLAN.dwg | Plotted: 8/28/2025

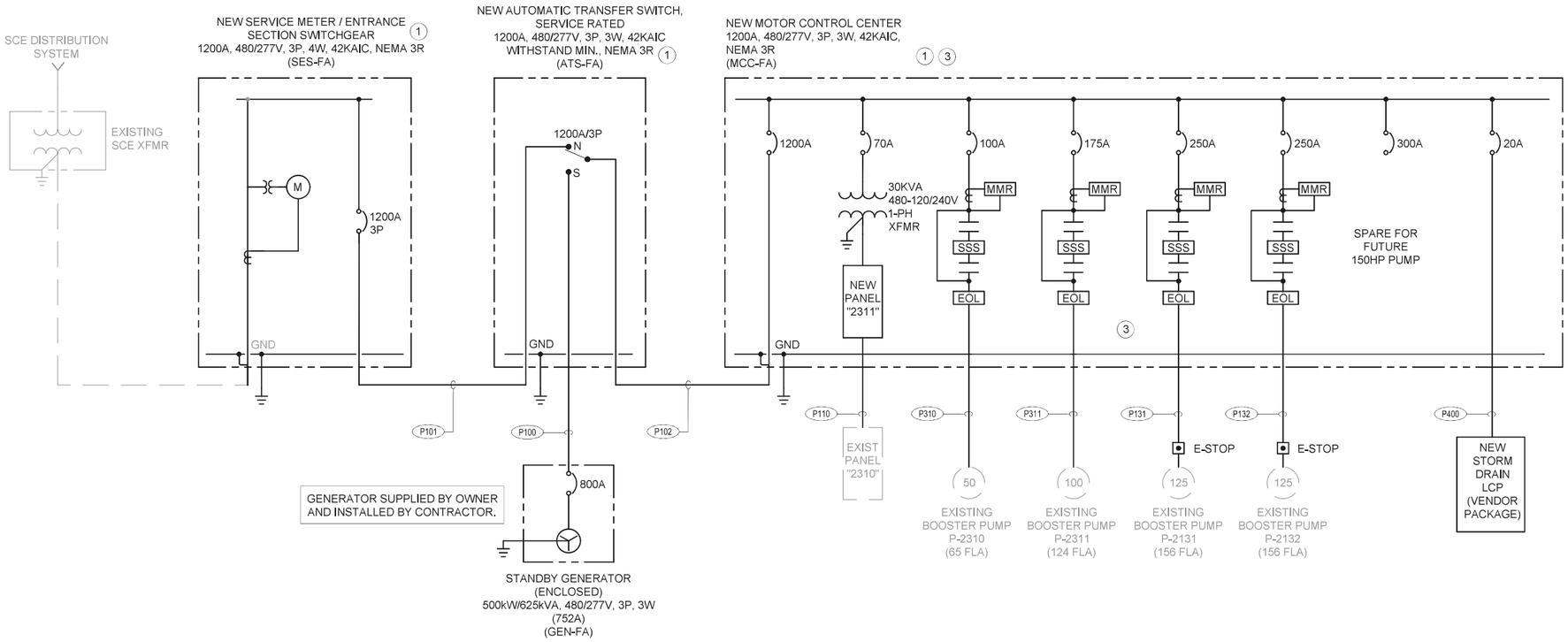

ELECTRICAL SINGLE-LINE DIAGRAM (1)

SCALE: N/A

KEY NOTES:

1. ALL SHORT CIRCUIT INTERRUPTING AND PROTECTING DEVICES SHALL HAVE A SHORT CIRCUIT INTERRUPTING RATING EQUAL TO OR GREATER THAN THE AVAILABLE SHORT CIRCUIT ON THE BUS.
2. SEE DETAIL #6 ON SHEET GE-3 FOR GENERATOR I/O CONNECTION DIAGRAM.
3. SEE SHEET FA-E-3 FOR TYPICAL BOOSTER PUMP SCHEMATIC WIRING DIAGRAM.
4. CONTRACTOR TO VERIFY THE QUANTITY OF CONTROL WIRING CONDUCTORS REQUIRED TO EACH PUMP, TYPICAL FOR ALL.
5. EXISTING PANEL LP-2310 LOADS ARE UNKNOWN. THE CONTRACTOR SHALL DETERMINE THE EXISTING MAXIMUM DEMAND LOADS OF LP-2310 PER NEC 220.87. IF 125% OF THE MAXIMUM RECORDED DEMAND OF LP-2310 PLUS THE NEW LOADS AT LP-2311 EXCEEDS 100A, THE ENGINEER OF RECORD SHALL BE NOTIFIED AS THE PANEL BUS, MAIN CB, TRANSFORMER, AND MCC FEEDER CB MAY NEED TO BE UPSIZED.

CIRCUIT/DESCRIPTION	KVA	HP	FLA
MCC-FA			
MOTOR LOADS			
BOOSTER PUMP 'P-2310'		50.0	65.0
BOOSTER PUMP 'P-2311'		100.0	124.0
BOOSTER PUMP 'P-2131'		125.0	156.0
BOOSTER PUMP 'P-2132'		125.0	156.0
FUTURE 150HP PUMP		150.0	180.0
STORM DRAIN PUMP LCP		5.0	10.0
NON-MOTOR LOADS			
30 KVA TRANSFORMER	30.0		62.5
SUBTOTAL			763.6
+ 25% OF LARGEST MOTOR			45.0
TOTAL AMPS @ 480V/3PHASE			798.5
SERVICE SIZE (AMPS)			**1200.0**

"MCC-FA" LOAD CALCULATIONS

CONDUIT SCHEDULE

CONDUIT NUMBER	SIZE	FROM	TO	CONDUIT FILL CONDUCTORS	PWR	CONT	INST	REMARKS	
P100	(3 SETS) 3"C.	AUTOMATIC TRANSFER SWITCH "ATS-FA"	GENERATOR "GEN-FA"	(3 SETS) 3-300MCM, 1#1/0G	X			MAIN GENERATOR FEED (APP 50')	
P100	(1) 3"C.	AUTOMATIC TRANSFER SWITCH "ATS-FA"	GENERATOR "GEN-FA"	SPARE CONDUIT				SPARES	
P101	(4 SETS) 3"C.	SERVICE ENTRANCE SECTION "SES-FA"	AUTOMATIC TRANSFER SWITCH "ATS-FA"	(4 SETS) 3-350MCM, 1#3/0G	X				
P102	(4 SETS) 3"C.	AUTOMATIC TRANSFER SWITCH "ATS-FA"	MOTOR CONTROL CENTER "MCC-FA"	(4 SETS) 3-350MCM, 1#3/0G	X				
P110	2"C.	NEW PANEL "2311"	EXISTING PANEL "2310" (SUB-PANEL)	2-#1/0, 1#8G	X			SUBPANEL 2310 POWER	
P131	2-1/2"C.	MOTOR CONTROL CENTER "MCC-FA"	PUMP 2131	3-#250MCM, 1#4G	X			PUMP 2131 POWER	
P132	2*1/2"C.	MOTOR CONTROL CENTER "MCC-FA"	PUMP 2132	3-#250MCM, 1#4G	X			PUMP 2132 POWER	
P200	1"C.	LIGHTING PANEL "2310"	GENERATOR "GEN-FA" PANEL	3#8, 1#10G	X			MAIN GENERATOR PANEL POWER	
P310	2"C.	MOTOR CONTROL CENTER "MCC-FA"	PUMP 2310	3-#1, 1#8G	X			PUMP 2310 POWER	
P311	2"C.	MOTOR CONTROL CENTER "MCC-FA"	PUMP 2311	3-#2/0, 1#6G	X			PUMP 2311 POWER	
P400	3/4"C.	MOTOR CONTROL CENTER "MCC-FA"	STORM DRAIN LCP	3-#12, 1#12G	X			STORM DRAIN LCP POWER	
P401	2"C.	STORM DRAIN LCP	STORM DRAIN PUMP	PER MANF. CABLE	X			STORM DRAIN PUMP POWER	
C300	1"C.	GENERATOR "GEN-FA"	SITE SCADA RTU	16#14, 1#14G		X		GENERATOR CONTROL SIGNALS	(2)
C300A	1"C.	GENERATOR "GEN-FA"	SITE SCADA RTU	SPARE CONDUIT				SPARES	
C301	1"C.	AUTOMATIC TRANSFER SWITCH "ATS-FA"	SITE SCADA RTU	4#14, 1#14G		X		ATS CONTROL SIGNALS	
C310	1"C.	MOTOR CONTROL CENTER "MCC-FA"	PUMP 2310	6#14, 1#14G		X		PUMP CONTROL SIGNALS	
C311	1"C.	MOTOR CONTROL CENTER "MCC-FA"	PUMP 2311	6#14, 1#14G		X		PUMP CONTROL SIGNALS	
C331	1"C.	MOTOR CONTROL CENTER "MCC-FA"	PUMP 2131	6#14, 1#14G		X		PUMP CONTROL SIGNALS	(4) TYP.
C332	1"C.	MOTOR CONTROL CENTER "MCC-FA"	PUMP 2132	6#14, 1#14G		X		PUMP CONTROL SIGNALS	
C400	1"C.	STORM DRAIN LCP	STORM DRAIN PUMP	6#14, 1#14G		X		STORM DRAIN CONTROL SIGNALS	
C500	2"C.	MOTOR CONTROL CENTER "MCC-FA"	SITE SCADA RTU	24#14, 1#14G		X		MCC PUMPS CONTROL SIGNALS	
A400	1"C.	GENERATOR "GEN-FA"	SITE SCADA RTU	1#16TSP			X	GENERATOR ANALOG (4-20) SIGNALS	

CONDUIT & CABLE SCHEDULE

LIGHTING PANEL "LP-2311"

125 AMP BUS RATING 100 AMP MAIN C/B 10 kA SHORT CIRCUIT RATING LOCATION: IN MCC-FA
120/240 VOLTS 1 PHASE 3 WIRE 60 Hz. ELECTRONIC GRADE 24 POLES SURFACE MOUNTED

	CIRCUIT NO.	DESCRIPTION	LOAD VA PHASE A	LOAD VA PHASE B	BREAKER AMPS/POLES	NOTES	CIRCUIT NO.	DESCRIPTION	LOAD VA PHASE A	LOAD VA PHASE B	BREAKER AMPS/POLES	NOTES
(5)	1	EXISTING PANEL "LP-2310"	–		100/2		2	GENERATOR "GEN-FA" PANEL	3400		40/2	
	3			–			4			3400		
	5	SPARE	–		20/1		6	SPARE	–		20/1	
	7	SPARE		–	20/1		8	SPARE		–	20/1	
	9	SPARE	–		20/1		10	SPARE	–		20/1	
	11	SPARE		–	20/1		12	SPARE		–	20/1	
	13	SPARE	–		20/1		14	SPARE	–		20/1	
	15	SPACE					16	SPACE				
	17	SPARE	–		20/2		18	SPARE	–		20/2	
	19			–			20			–		
	21	SPACE					22	SPACE				
	23	SPACE					24	SPACE				
		TOTAL VA	–	–				TOTAL VA	–	–		
								TOTAL PHASE KVA	–	–		
							(5)	TOTAL CONNECTED KVA	–			

"LP-2311" PANEL SCHEDULE

LINE IS 2 INCHES AT FULL SIZE IF NOT 2" – SCALE ACCORDINGLY

Letter	Description	Date	Initial	Initial
	Revisions		Approved by:	

BRADY
Water • Power • Transportation
10089 Willow Creek Rd., Suite 375
San Diego, California 92131
P: 858.496.0500 - www.richardbrady.com

REGISTERED PROFESSIONAL ENGINEER RYAN S. NISHIMURA No. 20050 ELECTRICAL STATE OF CALIFORNIA
08/28/2025

CITY OF REDLANDS
Municipal Utilities and Engineering Department

WATER FACILITIES GENERATORS PROJECT No. 501028

FIFTH AVE SINGLE LINE DIAGRAM AND SCHEDULES

FA-E-2

Designed by: CCW Date: 08/28/2025
Checked by: RSN Date: 08/28/2025
Drawn by: CCW Date: 08/28/2025
Checked by: RSN Date: 08/28/2025

Reviewed By: Gerard J. Nepomuceno, Civil Engineer, R.C.E. 93200 Date
Approved By: Goutam K. Dobey, City Engineer, R.C.E. 75646 Date

Sheet 32 of 38 Sheets
Scale: Hortz. AS SHOWN Vert. NONE

D-10117

P:\WHB_South\REDLND\REDLND.006_Engineering and Design of Water Facilities Generators (No. 20230112WM)\4_EngDesign\2_Dwgs\6-Fifth Avenue PS\FA-E-2 SINGLE LINE DIAGRAM AND SCHEDULES.dwg | Plotted: 8/28/2025

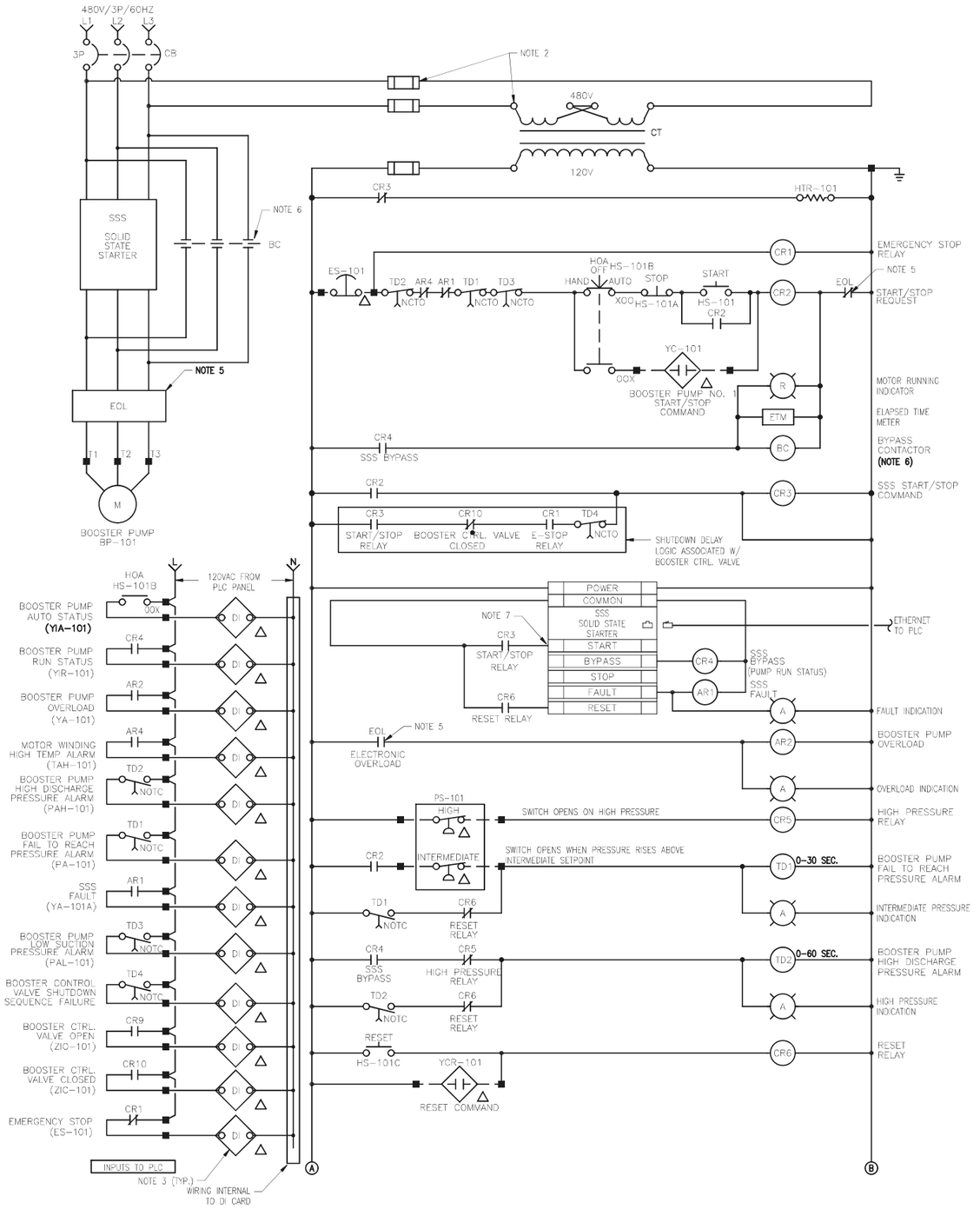

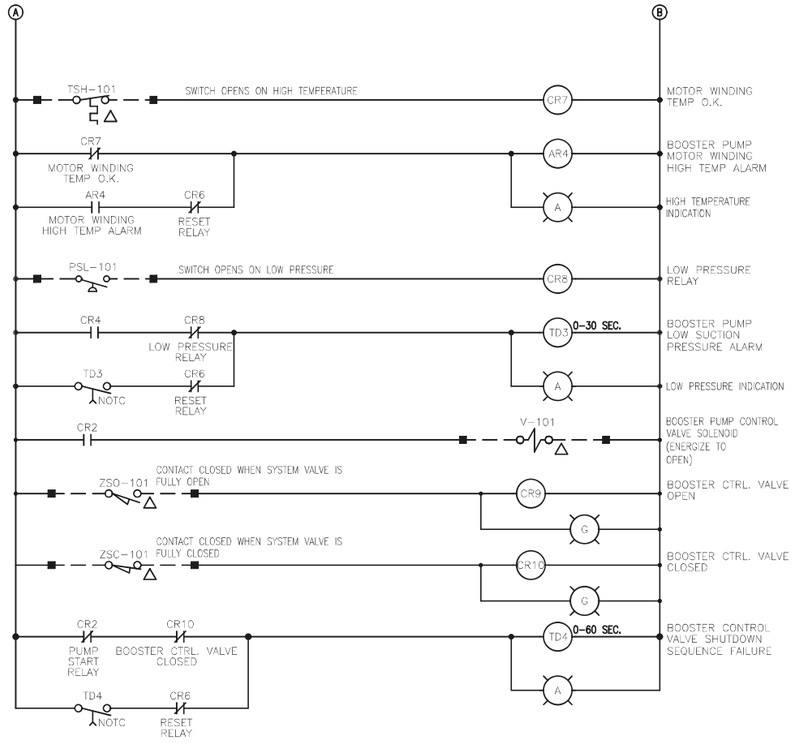

NOTES:

1. TYPICAL SCHEMATIC DIAGRAMS ARE INTENDED TO REFLECT THE GENERAL CONTROL STRATEGY. ACTUAL CIRCUITRY MAY VARY FOR SPECIFIC EQUIPMENT SUPPLIED. THE NUMBER AND TYPE OF DEVICES SHALL BE FURNISHED AS REQUIRED FOR PROPER OPERATION OF THE EQUIPMENT.
2. CONTROL POWER TRANSFORMERS (CPT) SHALL BE ADEQUATELY SIZED AND SHALL BE PROVIDED WITH PROPERLY SIZED FUSES FOR BOTH THE PRIMARY AND SECONDARY WINDINGS.
3. CONNECTIONS TO PLC INPUTS AND OUTPUTS ARE SHOWN IN A CONCEPTUALIZED AND SIMPLIFIED MANNER. REFER TO DETAILED RTU FABRICATION DRAWINGS FOR SPECIFIC I/O WIRING REQUIREMENTS.
4. NOT USED.
5. EOL SHOWN IS ONLY APPLICABLE IF SOLID STATE STARTER PROVIDED DOES NOT HAVE INTEGRAL EOL PROTECTION BUILT-IN THAT PROTECTS THE MOTOR IN BOTH BYPASS AND NON-BYPASS MODES.
6. BYPASS CONTACTOR SHOWN IS ONLY APPLICABLE IF SOLID STATE STARTER PROVIDED DOES NOT HAVE AN INTEGRAL BYPASS CONTACTOR.
7. CONFIGURE SOFT START FOR 2-WIRE START/STOP OPERATION.
8. TO CUSTOMIZE SCHEMATIC AND CONNECTION DIAGRAMS, REPLACE THE '1' IN THE CIRCUIT, I/O, AND EQUIPMENT/INSTRUMENT IDENTIFIERS WITH A 2 OR 3 FOR SSS-102, AND SSS-103, RESPECTIVELY.

TYPICAL BOOSTER PUMP SOLID STATE STARTER SCHEMATIC DIAGRAM

1

SCALE: N/A

LINE IS 2 INCHES AT FULL SIZE
IF NOT 2" – SCALE ACCORDINGLY

BRADY
Water • Power • Transportation
10089 Willow Creek Rd., Suite 375
San Diego, California 92131
P: 858.496.0500 - www.richardbrady.com

REGISTERED PROFESSIONAL ENGINEER
RYAN S. NISHIMURA
No. 20050
ELECTRICAL
STATE OF CALIFORNIA

08/28/2025

Letter	Description	Date	Initial	Initial
	Revisions			Approved by:

CITY OF REDLANDS
Municipal Utilities and Engineering Department

WATER FACILITIES GENERATORS
PROJECT No. 501028

BOOSTER PUMP SCHEMATIC DIAGRAM

FA-E-3

Designed by: CCW
Date: 08/28/2025
Checked by: RSN
Date: 08/28/2025
Drawn by: CCW
Date: 08/28/2025
Checked by: RSN
Date: 08/28/2025

Reviewed By:
Gerard J. Nepomuceno, Civil Engineer, R.C.E. 93200 Date
Approved By:
Goutam K. Dobey, City Engineer, R.C.E. 75646 Date

Sheet 33 of 38 Sheets
Scale: Horiz. AS SHOWN
Vert. NONE

D-10117

P:\WHB_South\REDLND\REDLND.006_Engineering and Design of Water Facilities Generators (No. 20230112WM)\4_EngDesign\2_Dwgs\6-Fifth Avenue PS\FA-E-3 BOOSTER PUMP SCHEMATIC DIAGRAM.dwg | Plotted: 8/28/2025

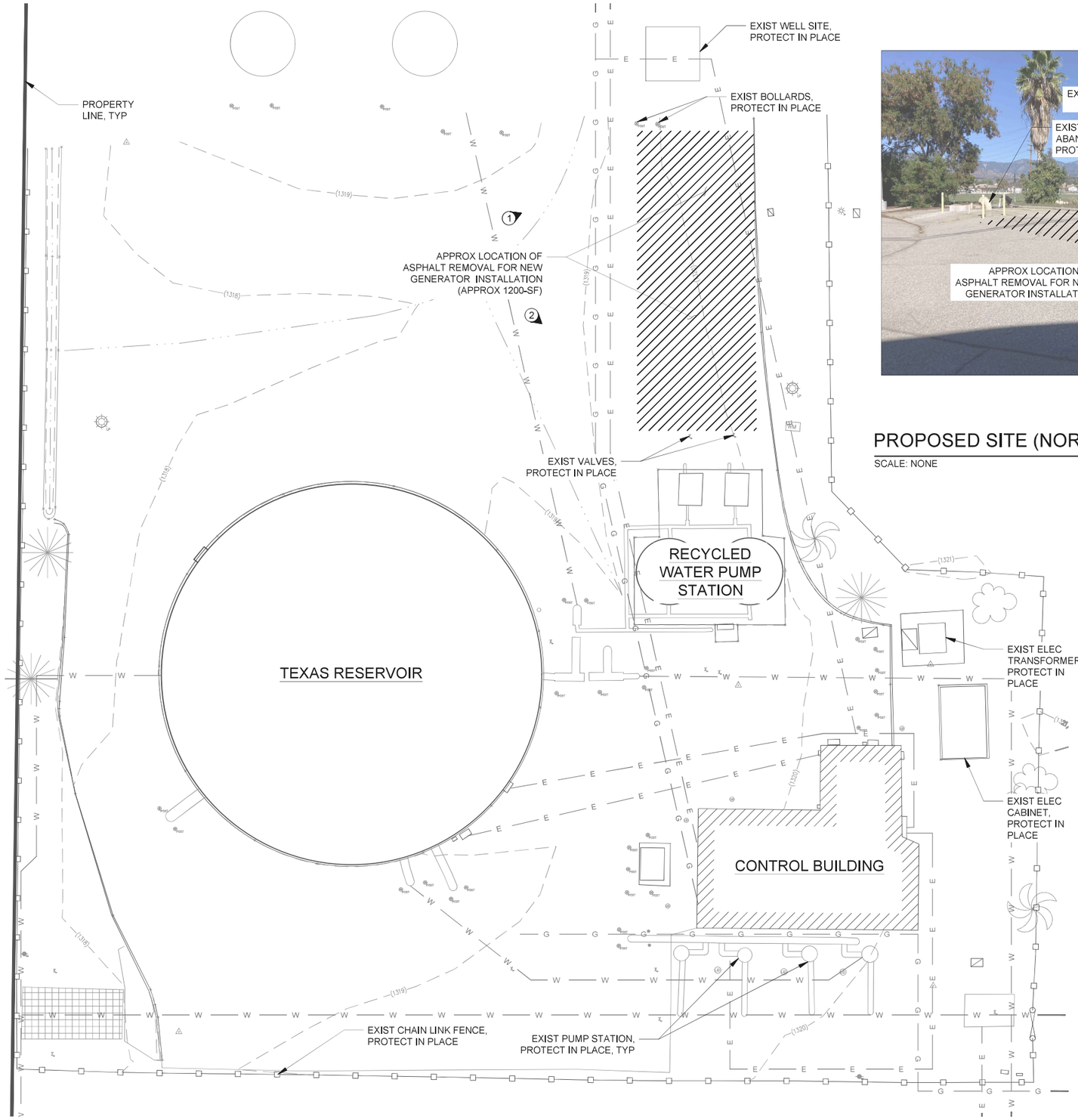

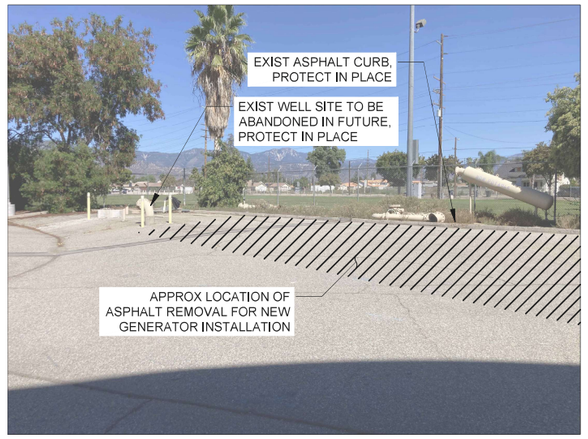

PROPOSED SITE (NORTHEAST) — 1

SCALE: NONE

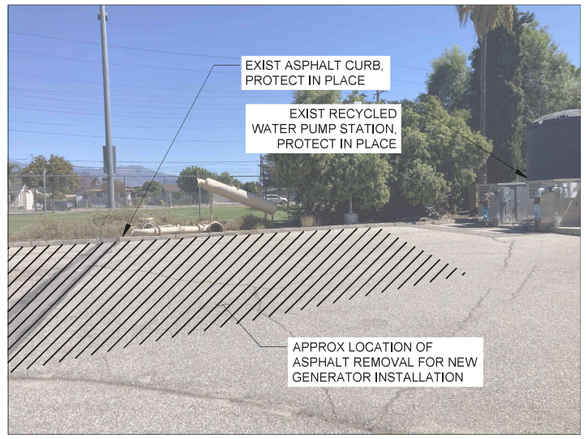

PROPOSED SITE (SOUTHEAST) — 2

SCALE: NONE

UTILITY NOTE:

ATTENTION IS DIRECTED TO THE POSSIBLE EXISTENCE OF UNDERGROUND FACILITIES NOT KNOWN OR IN A LOCATION DIFFERENT FROM THAT WHICH IS NOTED ON THE PLANS OR IN THE SPECIAL PROVISIONS. THE CONTRACTOR SHALL TAKE STEPS TO ASCERTAIN THE EXACT LOCATION OF ALL UNDERGROUND FACILITIES PRIOR TO THE START OF ANY CONSTRUCTION AND TO PROTECT IN PLACE ALL SUCH FACILITIES FROM ANY DAMAGE OR INTERFERENCE WITH THEIR SERVICE AND BEFORE EXCAVATING, THE CONTRACTOR SHALL VERIFY THE LOCATION OF UNDERGROUND UTILITIES BY CONTACTING EACH OF THE FOLLOWING LISTED UTILITY COMPANIES:

- ELECTRIC: SOUTHERN CALIFORNIA EDISON (SCE)
- GAS: SOUTHERN CALIFORNIA GAS COMPANY
- WATER & SEWER: CITY OF REDLANDS

10' 0 10' 20'

1" = 10'

SITE DEMO PLAN

SCALE : 1" = 10'-0"

LEGEND

3 PHOTO NUMBER, SEE DETAILS

LINE IS 2 INCHES AT FULL SIZE
IF NOT 2" – SCALE ACCORDINGLY

BRADY
Water • Power • Transportation
10089 Willow Creek Rd., Suite 375
San Diego, California 92131
P: 858.496.0500 - www.richardbrady.com

REGISTERED PROFESSIONAL ENGINEER GARRETT D. MURAKAMI C 90365 CIVIL STATE OF CALIFORNIA

08/28/2025

Letter	Description	Date	Initial	Initial
	Revisions			Approved by:

CITY OF REDLANDS
Municipal Utilities and Engineering Department

WATER FACILITIES GENERATORS PROJECT No. 501028

SITE DEMO PLAN AND DETAILS

TS-D-1

D-10117

Designed by:	GDM	Reviewed By:	
Date:	08/28/2025	Gerard J. Nepomuceno, Civil Engineer, R.C.E. 93200	Date
Checked by:	KCK	Approved By:	
Date:	08/28/2025	Goutam K. Dobey, City Engineer, R.C.E. 75646	Date
Drawn by:	GDM	Sheet 34 of 38 Sheets	
Date:	08/28/2025	Scale: Horiz. AS SHOWN	
Checked by:	KCK	Vert. NONE	
Date:	08/28/2025		

P:\WHB_South\REDLND\REDLND.006_Engineering and Design of Water Facilities Generators (No. 20230112WM)\4_EngDesign\2_Dwgs\7—Texas Street PS\TS-D-1 SITE DEMO PLAN.dwg | Plotted: 8/28/2025

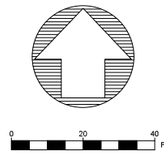

SCALE: 1" = 20'

LEGEND
- -DECIDUOUS TREE
- -ELEC. PULLBOX
- -EVERGREEN TREE
- -FENCE
- -LIGHT STANDARD
- -PALM TREE
- -POST
- -POWER POLE
- -WATER METER
- -WATER VALVE

NOTE:
COORDINATES SHOWN ARE BASED ON THE CALIFORNIA COORDINATE SYSTEM (CCS83), ZONE VI, 1983 NAD (2017.50 EPOCH)

BEARINGS ARE BASED ON THE BEARING BETWEEN CALIFORNIA SPATIAL REFERENCE CENTER CONTINUOUS GPS STATIONS "CRFP" TO "RTHS" BEING N76°06'46"W

ELEVATIONS ARE BASED ON RIVERSIDE COUNTY BENCH MARK "A 296 RESET", DESCRIBED AS "AT MENTONE, ALONG MENTONE BOULEVARD, AT MILEPOLE 12, 62.0 FEET EAST OF AND ACROSS THE TRACK FROM THE SOUTHEAST CORNER OF THE ATCHISON, TOPEKA AND SANTA FE RAILWAY STATION, 20.3 FEET EAST OF THE NORTHWEST CORNER OF A LARGE WAREHOUSE, IN THE TOP OF THE EAST END OF THE BOTTOM CONCRETE STEP, 25.9 FEET EAST OF THE EAST RAIL OF A SIDE TRACK, 7.8 FEET NORTH OF THE EAST EDGE OF A DOOR TO THE WAREHOUSE, ABOUT 1/2 FOOT HIGHER THAN AN ENTRANCE WALK, AND ABOUT 2 1/2 FEET HIGHER THAN THE RAILROAD."
ELEV.= 1653.10 FEET (NAVD 88)

DATE OF SURVEY: JUNE, 2023

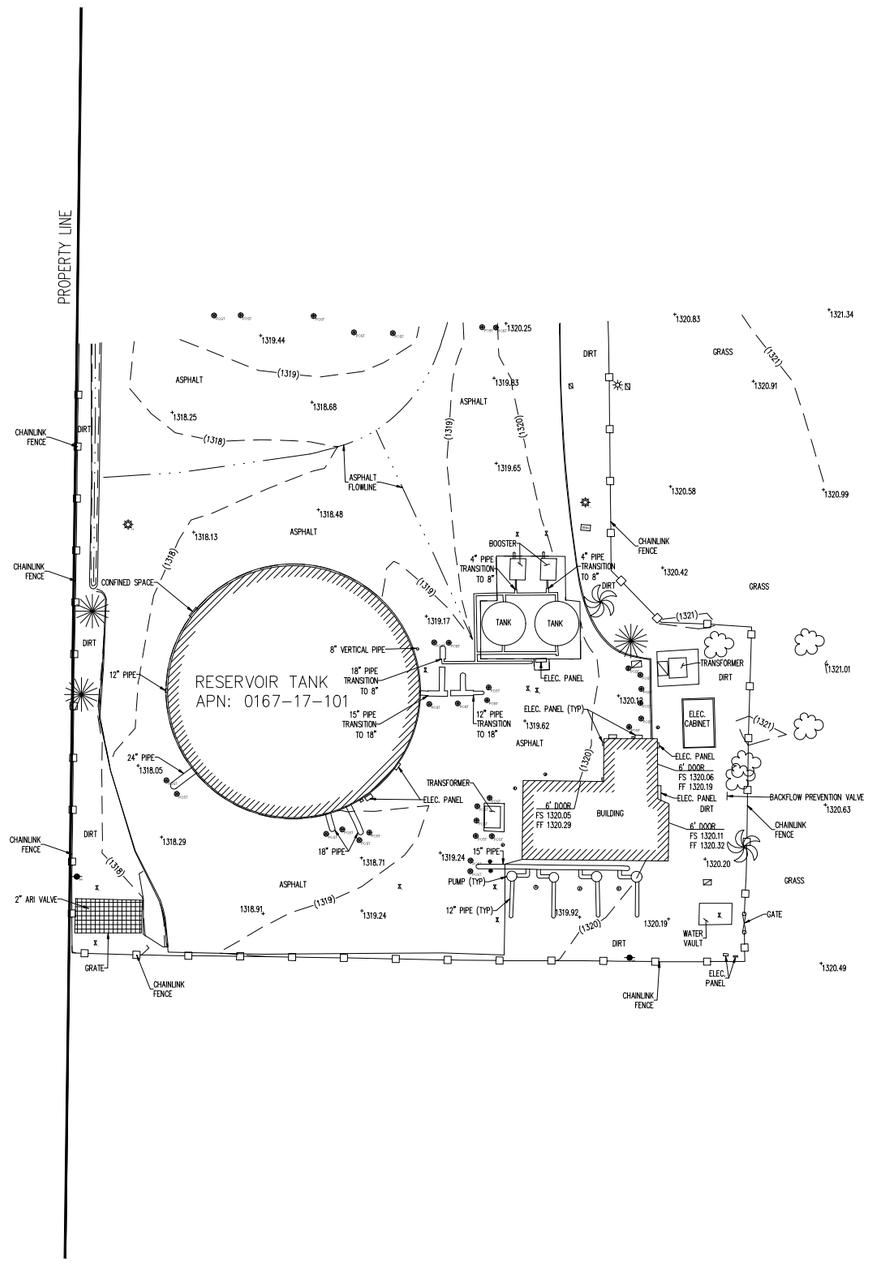

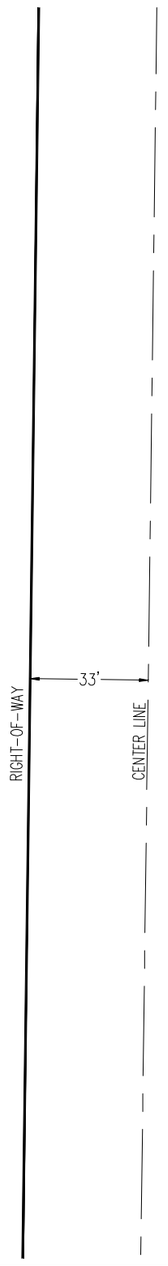

I CERTIFY THAT THIS TOPOGRAPHIC SURVEY OF APN: 0167-17-101, LOCATED IN THE CITY OF REDLANDS, CALIFORNIA, WAS COMPLETED BY ME, OR UNDER MY DIRECT SUPERVISION, DURING JUNE, 2023.

RUEL DEL CASTILLO
CALIFORNIA P.L.S. 4212

7/5/2023
DATE

LINE IS 2 INCHES AT FULL SIZE
IF NOT 2" – SCALE ACCORDINGLY

Letter	Description	Date	Initial	Initial
	Revisions			Approved by:

BRADY
Water • Power • Transportation
10089 Willow Creek Rd., Suite 375
San Diego, California 92131
P: 858.496.0500 - www.richardbrady.com

08/28/2025

CITY OF REDLANDS
Municipal Utilities and Engineering Department

WATER FACILITIES GENERATORS
PROJECT No. 501028

EXISTING CONDITION SURVEY

TS-C-1

Designed by: RDC
Date: 08/28/2025
Checked by: KCK
Date: 08/28/2025
Drawn by: GDM
Date: 08/28/2025
Checked by: KCK
Date: 08/28/2025

Reviewed By:
Gerard J. Nepomuceno, Civil Engineer, R.C.E. 93200 Date
Approved By:
Goutam K. Dobey, City Engineer, R.C.E. 75646 Date

Sheet 35 of 38 Sheets
Scale: Horiz. AS SHOWN
Vert. NONE

D-10117

P:\WHB_South\REDLND\REDLND.006_Engineering and Design of Water Facilities Generators (No. 20230112WM)\4_EngDesign\2_Dwgs\7-Texas Street PSYTS-C-1 EXISTING CONDITION SURVEY.dwg | Plotted: 8/28/2025

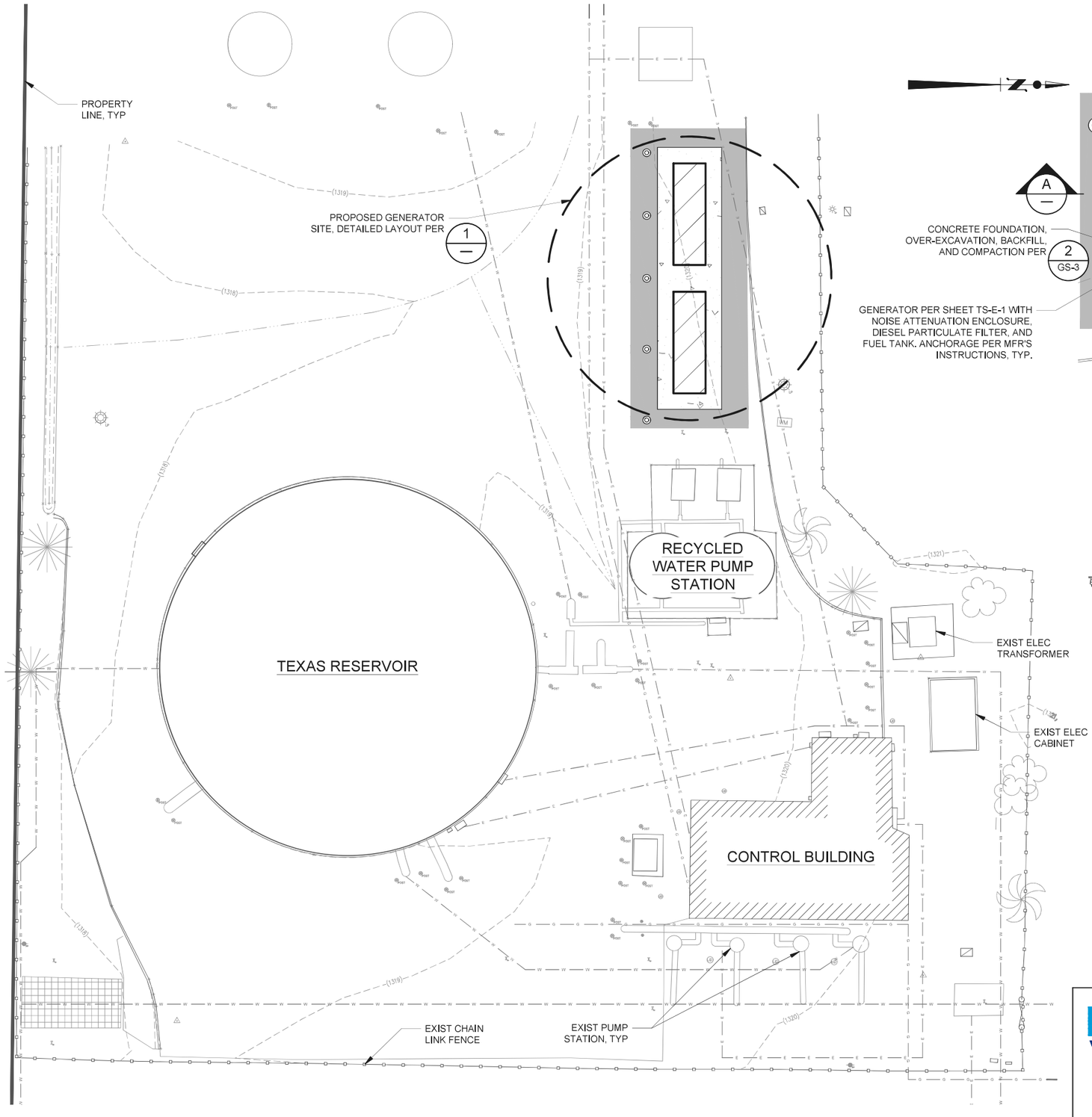

OVERALL SITE PLAN
SCALE : 1" = 10'-0"

10' 0 10' 20'
1" = 10'

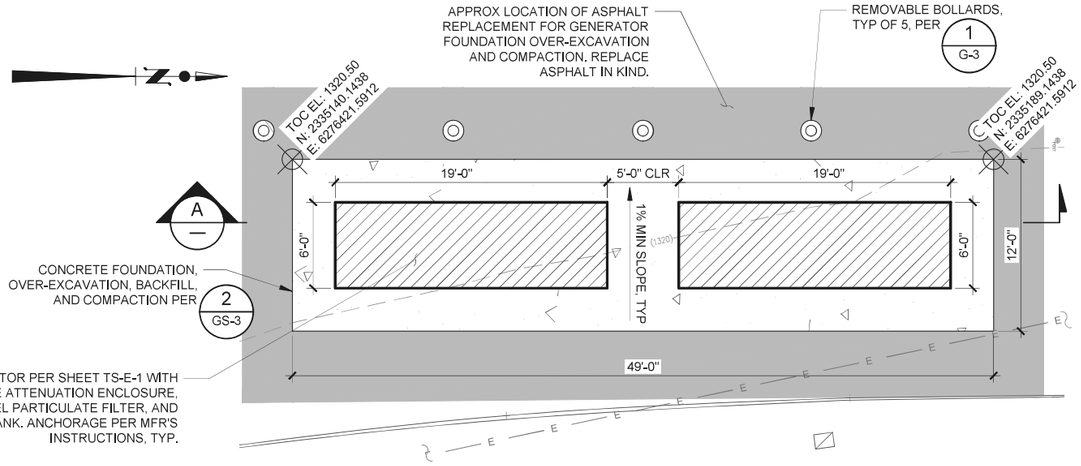

IMPROVEMENT PLAN 1/—
SCALE:1" = 5'-0"

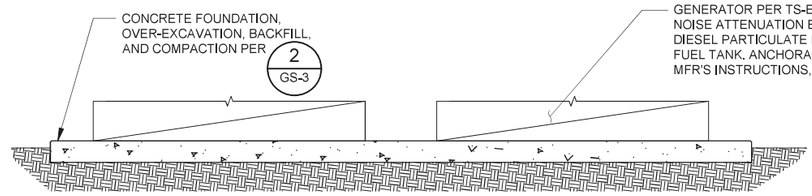

IMPROVEMENT SECTION A/—
SCALE:1" = 5'-0"

NOTES:
1. CONTRACTOR SHALL SUBMIT GENERATOR ANCHORAGE DESIGN AND SEISMIC CALCULATIONS STAMPED BY A CALIFORNIA LICENSED PROFESSIONAL ENGINEER FOR APPROVAL BY EOR.
2. SAWCUT TO ESTABLISH CLEAN EDGE AND REPLACE ASPHALT IN KIND (MIN THICKNESS 4" ASPHALT ON 8" AGGREGATE BASE).
3. ANY INCIDENTAL DAMAGE TO PAVEMENT SHALL BE REPAIRED BY THE CONTRACTOR.
4. REFER TO SHEET TS-E-1 FOR ELECTRICAL SCOPE OF WORK.

LINE IS 2 INCHES AT FULL SIZE
IF NOT 2" – SCALE ACCORDINGLY

BRADY
Water • Power • Transportation
10089 Willow Creek Rd., Suite 375
San Diego, California 92131
P: 858.496.0500 - www.richardbrady.com

REGISTERED PROFESSIONAL ENGINEER GARRETT D. MURAKAMI C 90365 CIVIL STATE OF CALIFORNIA
08/28/2025

Letter	Description	Date	Initial	Initial
	Revisions			Approved by:

CITY OF REDLANDS
Municipal Utilities and Engineering Department

WATER FACILITIES GENERATORS PROJECT No. 501028

OVERALL SITE PLAN

TS-C-2

Designed by: GDM
Date: 08/28/2025
Checked by: KCK
Date: 08/28/2025
Drawn by: GDM
Date: 08/28/2025
Checked by: KCK
Date: 08/28/2025

Reviewed By:
Gerard J. Nepomuceno, Civil Engineer, R.C.E. 93200 Date
Approved By:
Goutam K. Dobey, City Engineer, R.C.E. 75646 Date

Sheet 36 of 38 Sheets
Scale: Horiz. AS SHOWN
Vert. NONE

D-10117

P:\VHB_South\REDLND\REDLND.006_Engineering and Design of Water Facilities Generators (No. 20230112VW)\4_EngDesign\2_Dwgs\7-Texas Street PS\TS-C-2 OVERALL SITE PLAN.dwg | Plotted: 8/28/2025

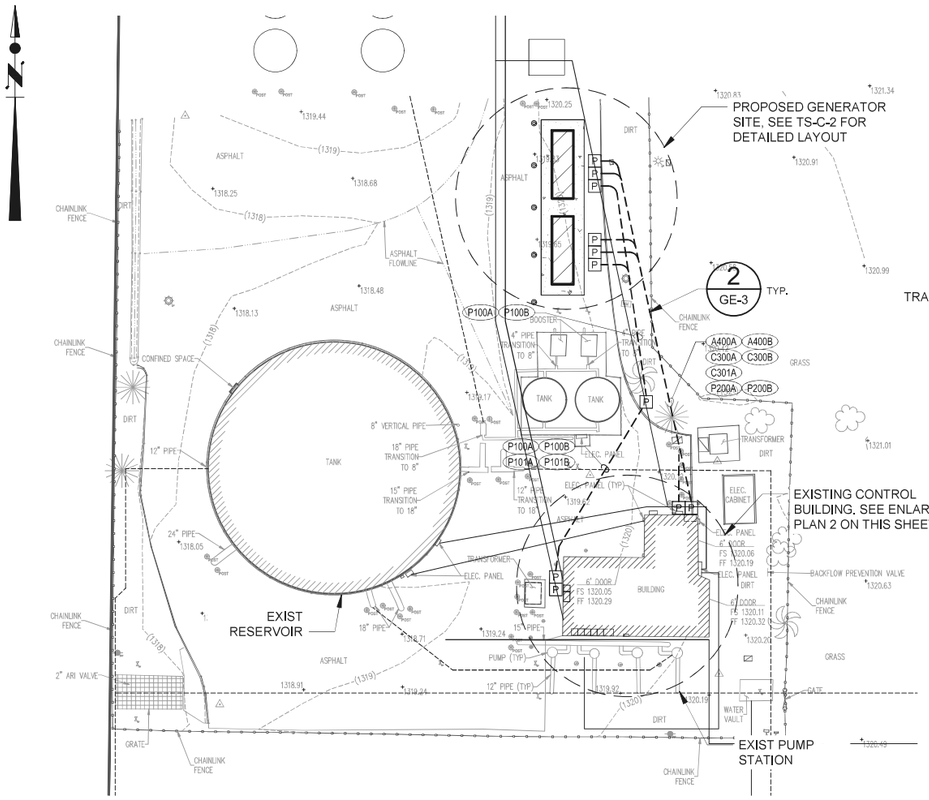

20' 0 20' 40'
1" = 20'

OVERALL ELECTRICAL SITE PLAN 1 -

SCALE:1" = 20'-0"

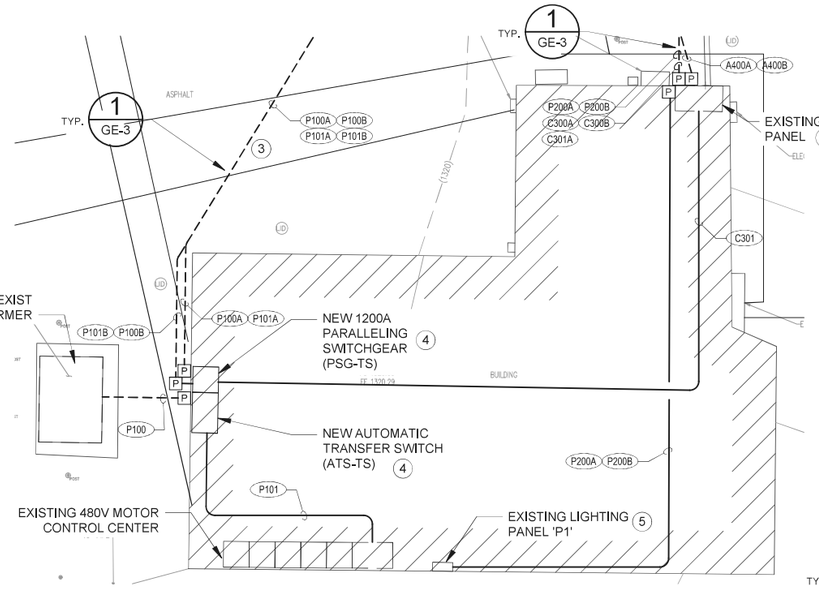

ENLARGED ELECTRICAL SITE PLAN 2 -

SCALE:1" = 5'-0"

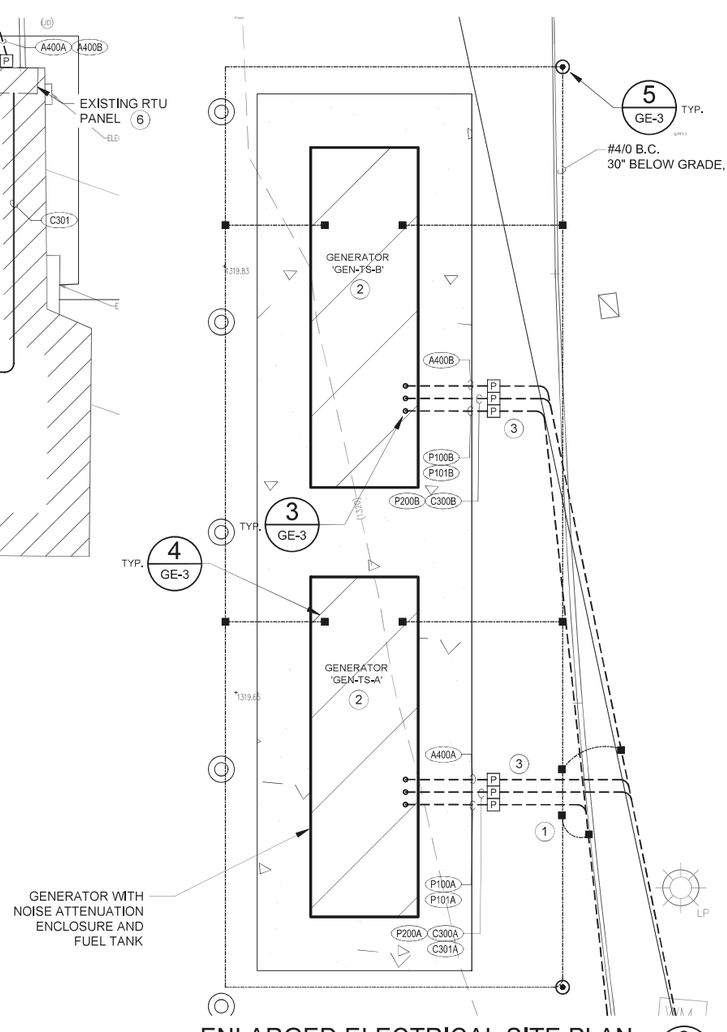

ENLARGED ELECTRICAL SITE PLAN 3 -

SCALE:1" = 4'-0"

GENERAL NOTES:

1. COORDINATE NEW CONDUIT AND WIRE TO NEW PANEL LOCATIONS AS REQUIRED FOR A COMPLETE AND FULLY OPERATIONAL SYSTEM.
2. THE PLANS DO NOT ALWAYS SHOW RACEWAYS AND CONDUCTORS BETWEEN RECEPTACLES, LIGHTING FIXTURES AND SWITCHES. HOWEVER, FURNISH AND INSTALL THESE CONNECTIONS IN ACCORDANCE WITH THE ASSIGNED FIXTURE OR RECEPTACLE CIRCUIT NUMBER AND SWITCH DESIGNATIONS. HOMERUN SHOWN CONCEALED SHALL BE INDICATIVE OF THE ENTIRE CIRCUIT INSTALLATION. THE SAME SHALL APPLY FOR HOMERUNS SHOWN EXPOSED. REFER TO SPECIFICATIONS FOR MATERIALS AND INSTALLATION REQUIREMENTS.
3. MAINTAIN AT LEAST 3'-0" IN FRONT OF ELECTRICAL EQUIPMENT PER NEC ARTICLE NO. 110.
4. ALL EQUIPMENT SHALL BE GROUNDED. PROVIDE A COMPLETE GROUNDING SYSTEM IN ACCORDANCE WITH ARTICLE 250 OF THE NEC.
5. CONDUIT ROUTING AND WALL PENETRATIONS SHOWN DIAGRAMMATICALLY. EXACT ROUTING SHALL BE COORDINATED IN THE FIELD.
6. SWITCHES SHALL BE MOUNTED 4'-0" ABOVE FINISHED FLOOR UNLESS NOTED OTHERWISE. RECEPTACLES SHALL BE MOUNTED AT 3'-0" ABOVE FINISHED FLOOR UNLESS NOTED OTHERWISE.
7. SEE DRAWING TS-E-2 FOR CONDUIT AND WIRE SCHEDULE.
8. PROVIDE REDLINE MARKUPS FOR AS-BUILT CONDUIT ROUTING.
9. ALL CONDUITS SHALL BE CONCEALED UNLESS OTHERWISE NOTED OR APPROVED BY THE ENGINEER.

KEY NOTES:

1. ENSURE DUCTBANK GROUND CONDUCTORS ARE EXOTHERMICALLY BONDED TO THE GROUNDING ELECTRODE SYSTEM.
2. REFERENCE SHEETS GS-3 AND TS-C-2 FOR EQUIPMENT PAD MOUNTING DETAIL AND ADDITIONAL GENERATOR MOUNTING INFORMATION.
3. ALL CONCRETE ENCASED CONDUIT TO BE PVC SCHEDULE 80 CONDUIT, UNLESS NOTED OTHERWISE. CONTRACTOR TO VERIFY ANY EXISTING PIPING IN PROPOSED DUCT BANK LOCATION PRIOR TO TRENCHING.
4. REMOVE EXISTING AUTOMATIC TRANSFER SWITCH AND INSTALL NEW AUTOMATIC TRANSFER SWITCH/BREAKER BUS SECTION IN SAME LOCATION. SEE SHEET TS-E-2 FOR ADDITIONAL EQUIPMENT AND CONNECTION INFORMATION.
5. EXISTING 120/240V LIGHTING PANEL 'P1'. INSTALL NEW CIRCUIT BREAKER FOR NEW GENERATOR SUB-PANEL FEED AS INDICATED IN PANEL SCHEDULE AS SHOWN ON SHEET TS-E-2. NEW CIRCUIT BREAKER TO MATCH EXISTING TYPE AND MINIMUM SHORT CIRCUIT RATING.
6. EXISTING SCADA RTU CABINET. TERMINATE ALL CONTROL AND 4-20MA ANALOG SIGNAL WIRE IN EXISTING RTU CABINET. COORDINATE THE GENERATOR CONTROL AND SIGNAL REQUIREMENTS WITH THE CITY OF REDLANDS. ALL PROGRAMMING BY OTHERS.
   SEE DETAIL #6 ON SHEET GE-3 FOR GENERATOR I/O CONNECTION DIAGRAM.

LINE IS 2 INCHES AT FULL SIZE
IF NOT 2" – SCALE ACCORDINGLY

BRADY
Water • Power • Transportation
10089 Willow Creek Rd., Suite 375
San Diego, California 92131
P: 858.496.0500 - www.richardbrady.com

REGISTERED PROFESSIONAL ENGINEER
RYAN S. NISHIMURA
No. 20050
ELECTRICAL
STATE OF CALIFORNIA
08/28/2025

Letter	Description	Date	Initial	Initial
	Revisions			Approved by:

CITY OF REDLANDS
Municipal Utilities and Engineering Department

WATER FACILITIES GENERATORS
PROJECT No. 501028

TEXAS ST ELECTRICAL SITE PLAN

TS-E-1

Designed by: CCW Date: 08/28/2025
Checked by: RSN Date: 08/28/2025
Drawn by: CCW Date: 08/28/2025
Checked by: RSN Date: 08/28/2025

Reviewed By: Gerard J. Nepomuceno, Civil Engineer, R.C.E. 93200 Date
Approved By: Goutam K. Dobey, City Engineer, R.C.E. 75646 Date

Sheet 37 of 38 Sheets
Scale: Horiz. AS SHOWN
Vert. NONE

D-10117

P:\WHB_South\REDLND\REDLND.006_Engineering and Design of Water Facilities Generators (No. 20230112WM)\4_EngDesign\2_Dwgs\7-Texas Street PS\TS-E-1 ELECTRICAL SITE PLAN.dwg | Plotted: 8/28/2025

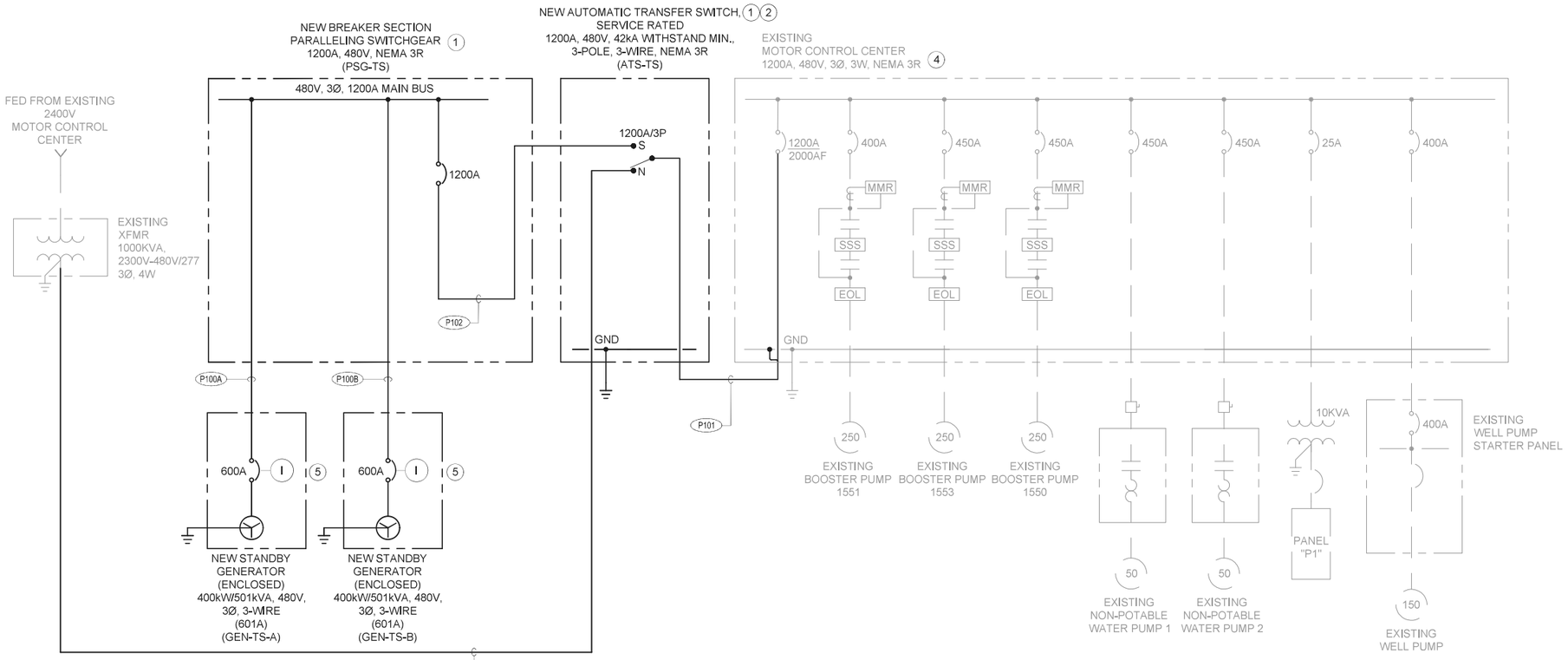

ELECTRICAL SINGLE-LINE DIAGRAM (1)

SCALE: N/A

KEY NOTES:

1. ALL SHORT CIRCUIT INTERRUPTING AND PROTECTING DEVICES SHALL HAVE A SHORT CIRCUIT INTERRUPTING RATING EQUAL TO OR GREATER THAN THE AVAILABLE SHORT CIRCUIT ON THE BUS.
2. REPLACE EXISTING AUTOMATIC TRANSFER SWITCH WITH NEW AUTOMATIC TRANSFER SWITCH. REFERENCE SITE PLAN AND ELEVATIONS FOR NEW ENCLOSURE DIMENSIONS AND LOCATION.
3. PROVIDE AND INSTALL OTWO NEW 40A, 2P CIRCUIT BREAKER IN PANEL 'P1' AS SHOWN IN PANEL SCHEDULE BELOW. ALL NEW CIRCUIT BREAKERS INSTALLED SHALL MATCH THE EXISTING CIRCUIT BREAKER TYPE AS CURRENTLY INSTALLED IN PANEL.
4. DISCONNECT ALL PUMPS CURRENTLY CONNECTED TO EXISTING GENERATOR AND RECONNECT TO EXISTING MCC BUS AS REQUIRED.
5. NEW STANDBY GENERATORS TO BE PROVIDED WITH CONTROLS AND ELECTRONICALLY OPERATED BREAKERS TO ALLOW FOR PARALLELING OPERATION. GENERATORS TO BE PROVIDED BY OWNER. NEW AUTOMATIC TRANSFER SWITCH AND BREAKER SECTION SWITCHGEAR TO BE PROVIDED BY CONTRACTOR. GENERATORS AND ALL REQUIRED SUPPORT EQUIPMENT TO BE INSTALLED BY CONTRACTOR.
6. SEE DETAIL #6 ON SHEET GE-3 FOR GENERATOR I/O CONNECTION DIAGRAM.
7. EXISTING LOAD VALUES ON THE EXISTING PANEL 'P1' ARE UNKNOWN AND WILL NEED TO BE VERIFIED PRIOR TO ADDING ANY FUTURE EQUIPMENT LOADS.

CONDUIT SCHEDULE

CONDUIT NUMBER	SIZE	FROM	TO	CONDUIT FILL CONDUCTORS	PWR	CONT	INST	REMARKS
P100	(4 SETS) 3"C.	EXISTING 480V TRANSFORMER	AUTOMATIC TRANSFER SWITCH "ATS-TS"	(4 SETS) 3-350MCM, 1#3/0G	X			
P100A	(2 SETS) 3"C.	PARALLELING SWITCHGEAR "PSG-TS"	GENERATOR "GEN-TS-A"	(2 SETS) 3-350MCM, 1#1G	X			MAIN GENERATOR A FEED (APP 100')
P101A	(1) 3"C.	PARALLELING SWITCHGEAR "PSG-TS"	GENERATOR "GEN-TS-A"	SPARE CONDUIT				SPARES
P100B	(2 SETS) 3"C.	PARALLELING SWITCHGEAR "PSG-TS"	GENERATOR "GEN-TS-B"	(2 SETS) 3-350MCM, 1#1G	X			MAIN GENERATOR B FEED (APP 140')
P101B	(1) 3"C.	PARALLELING SWITCHGEAR "PSG-TS"	GENERATOR "GEN-TS-B"	SPARE CONDUIT				SPARES
P101	(4 SETS) 3"C.	AUTOMATIC TRANSFER SWITCH "ATS-TS"	EXISTING 480V MCC	(4 SETS) 3-350MCM, 1#3/0G	X			
P102	(4 SETS) 3"C.	AUTOMATIC TRANSFER SWITCH "ATS-TS"	PARALLELING SWITCHGEAR "PSG-TS"	(4 SETS) 3-350MCM, 1#3/0G	X			
P200A	1"C.	LIGHTING PANEL "P1"	GENERATOR "GEN-TS-A" PANEL	3#8, 1#10G	X			MAIN GENERATOR PANEL POWER
P200B	1"C.	LIGHTING PANEL "P1"	GENERATOR "GEN-TS-B" PANEL	3#8, 1#10G	X			MAIN GENERATOR PANEL POWER
C300A	1"C.	GENERATOR "GEN-TS-A"	SITE SCADA RTU	16#14, 1#14G		X		GENERATOR CONTROL SIGNALS (SEE DETAIL #6 SHT GE-3) (6)
C300B	1"C.	GENERATOR "GEN-TS-B"	SITE SCADA RTU	16#14, 1#14G		X		GENERATOR CONTROL SIGNALS (SEE DETAIL #6 SHT GE-3)
C301	1"C.	PARALLELING SWITCHGEAR "PSG-TS"	SITE SCADA RTU	4#14, 1#14G		X		PSG/ATS CONTROL SIGNALS
C301A	1"C.	GENERATOR "GEN-TS-A"	SITE SCADA RTU	SPARE CONDUIT				SPARES
A400A	1"C.	GENERATOR "GEN-TS-A"	SITE SCADA RTU	1#16TSP			X	GENERATOR ANALOG (4-20) SIGNALS
A400B	1"C.	GENERATOR "GEN-TS-B"	SITE SCADA RTU	1#16TSP			X	GENERATOR ANALOG (4-20) SIGNALS

CONDUIT & CABLE SCHEDULE

PANEL P1

LOCATION: ELEC BLDG

100 AMP BUS RATING | 50 AMP MAIN C/B | 10 kA SHORT CIRCUIT RATING | 12 POLES
120/240 VOLTS | 1 PHASE | 3 WIRE | 60 Hz. | ELECTRONIC GRADE | SURFACE MOUNTED

CIRCUIT NO.	DESCRIPTION	LOAD VA PHASE A	LOAD VA PHASE B	BREAKER AMPS/POLES	NOTES	CIRCUIT NO.	DESCRIPTION	LOAD VA PHASE A	LOAD VA PHASE B	BREAKER AMPS/POLES	NOTES
1	GEN RECPTS	–		20/2		2	OUTDOOR PANEL	–		30/2	
3			–			4			–		
5	FLOW METERS	–		15/1		6	GENERATOR SUB-PANEL	3400		40/2	(3)
7	SPACE		–	–		8			3400		
9	SPACE	–		–		10	GENERATOR SUB-PANEL	3400		40/2	(3)
11	SPACE		–	–		12			3400		
	TOTAL VA	–	–				TOTAL VA	–	–		
							TOTAL PHASE KVA	–	–		
							TOTAL CONNECTED KVA	–			

(7)

PANEL SCHEDULE

BRADY
Water • Power • Transportation
10089 Willow Creek Rd., Suite 375
San Diego, California 92131
P: 858.496.0500 - www.richardbrady.com

REGISTERED PROFESSIONAL ENGINEER
RYAN S. NISHIMURA
No. 20050
ELECTRICAL
STATE OF CALIFORNIA
08/28/2025

Letter	Description	Date	Initial	Initial
	Revisions		Approved by:	

CITY OF REDLANDS
Municipal Utilities and Engineering Department

WATER FACILITIES GENERATORS
PROJECT No. 501028

TEXAS ST SINGLE LINE DIAGRAM AND SCHEDULES

TS-E-2

Designed by: CCW Date: 08/28/2025
Checked by: RSN Date: 08/28/2025
Drawn by: CCW Date: 08/28/2025
Checked by: RSN Date: 08/28/2025

Reviewed By:
Gerard J. Nepomuceno, Civil Engineer, R.C.E. 93200 Date
Approved By:
Goutam K. Dobey, City Engineer, R.C.E. 75646 Date

Sheet 38 of 38 Sheets
Scale: Horiz. AS SHOWN
Vert. NONE

D-10117

LINE IS 2 INCHES AT FULL SIZE
IF NOT 2" – SCALE ACCORDINGLY

P:\WHB_South\REDLND\REDLND.006_Engineering and Design of Water Facilities Generators (No. 20230112WM)\4_EngDesign\2_Dwgs\7-Texas Street PSYTS-E-2 SINGLE LINE DIAGRAM AND SCHEDULES.dwg | Plotted: 8/28/2025

CITY OF REDLANDS
MUNICIPAL UTILITIES &
ENGINEERING DEPARTMENT

Bid Proposal, Contract Documents and Specifications

For

Water Facilities Generators
Project No. 501028

RECYCLED PAPER

NOVEMBER 2025

CITY OF REDLANDS

MUNICIPAL UTILITIES & ENGINEERING DEPARTMENT

Bid Proposal, Contract Documents and Specifications

for

Water Facilities Generators
Project No. 501028

For use in conjunction with specifications entitled: "Standard Specifications for Public Works Construction (Greenbook)" 2021 Edition; "Standard Plans for Public Works Construction" 2021 Edition; Municipal Utilities and Engineering Department's Water Systems Standard Specifications and Sanitary Sewer System Standard Specifications, latest editions; and General Permit Conditions and Trench Specifications.

City Council:
Mario Saucedo, Mayor
Marc Shaw, Mayor Pro Tem
Denise Davis, Councilmember
Paul Barich, Councilmember
Eddie Tejeda, Councilmember

City Clerk:
Jeanne Donaldson, City Clerk

City Staff:
Charles M. Duggan Jr., City Manager

NØVEMBER 2025

THIS PAGE INTENTIONALLY LEFT BLANK

Water Facilities Generators
Project No. 501028

TABLE OF CONTENTS

(XX) REFLECTS PAGE IDENTIFICATION FOOTER ABBREVIATION

NOTICE INVITING SEALED PROPOSALS (NIB)

BID DOCUMENTS (BD)

INSTRUCTIONS TO BIDDERS 1
PROPOSAL 10
BID CERTIFICATION 19
BID BOND 20
NON-COLLUSION AFFIDAVIT 21
STATEMENT BY BIDDER 22
OFFICERS OF CORPORATION (Members of Firm) 22
SUB-CONTRACTORS LIST 23
QUALIFICATION AND EXPERIENCE STATEMENT 24
GENERAL INFORMATION 25

CONTRACT DOCUMENTS (CD)

PUBLIC WORKS CONSTRUCTION CONTRACT 2

GENERAL CONDITIONS (GC)

SECTION 1 – GENERAL, TERMS, DEFINITIONS, ABBREVIATIONS, UNITS OF MEASURE, AND SYMBOLS 1
SECTION 2 - SCOPE OF THE WORK 2
SECTION 3 - CONTROL OF THE WORK 3
SECTION 4 - CONTROL OF MATERIALS 8
SECTION 5 – LEGAL RELATIONS AND RESPONSIBILITES 8
SECTION 6 – PROSECUTION AND PROGRESS OF THE WORK 30
SECTION 7 - MEASUREMENT AND PAYMENT 32
SECTION 8 - FACILITIES FOR AGENCY PERSONNEL 34
SECTION 9 - ASSIGNMENT OF UNFAIR BUSINESS PRACTICES CLAIMS 34
SECTION 10 - TRENCHING AND EXCAVATION 34
SECTION 11 - REMOVAL, RELOCATION OR PROTECTION OF EXISTING UTILITIES 35
SECTION 200 - ROCK MATERIALS 36
SECTION 201 - CONCRETE, MORTAR AND RELATED MATERIALS 36
SECTION 203 - BITUMINOUS MATERIALS 37
SECTION 206 - MISCELLANEOUS METAL ITEMS 38

SECTION 207 – GRAVITY PIPE 38
SECTION 211 - MATERIAL TESTS 39
SECTION 214 - TRAFFIC STRIPING, CURB AND PAVEMENT MARKINGS, AND PAVEMENT MARKERS 39
SECTION 300 - EARTHWORK 39
SECTION 301 - TREATED SOIL, SUBGRADE PREPARATION AND PLACEMENT OF BASE MATERIALS 44
SECTION 302 - ROADWAY SURFACING 49
SECTION 303 - CONCRETE AND MASONRY CONSTRUCTION 59
SECTION 304 - METAL FABRICATION AND CONSTRUCTION 62
SECTION 314 - TRAFFIC STRIPING, CURB AND PAVEMENT MARKINGS, AND PAVEMENT MARKERS 63

GENERAL REQUIREMENTS

SECTION 01010 SUMMARY OF WORK
SECTION 01115 CONSTRUCTION SEQUENCE
SECTION 01200 MEASUREMENT AND PAYMENT
SECTION 01251 CHANGE ORDER REQUESTS
SECTION 01254 CHANGE ORDERS
SECTION 01298 SCHEDULE OF VALUES
SECTION 01321 CONSTRUCTION SCHEDULE
SECTION 01322 CONSTRUCTION PROGRESS PHOTOGRAPHY
SECTION 01323 CONSTRUCTION STATUS REPORTS
SECTION 01330 SUBMITTALS
SECTION 01572 EROSION CONTROL PLAN
SECTION 01581 CONSTRUCTION INFORMATION SIGNS
SECTION 01721 MOBILIZATION
SECTION 01722 SURVEYING
SECTION 01732 POTHOLING
SECTION 01740 DEMOBILIZATION

TECHNICAL SPECIFICATIONS

SECTION 02050 DEMOLITION AND SALVAGE
SECTION 02110 SITE PREPARATION
SECTION 02300 EXCAVATION AND STRUCTURAL FILL
SECTION 02350 EARTHWORK – PIPELINES AND MISCELLANEOUS STRUCTURES
SECTION 03200 REINFORCEMENT STEEL
SECTION 03251 EXPANSION AND CONSTRUCTION JOINTS

SECTION 03300 CAST IN PLACE CONCRETE
SECTION 03600 GROUT
SECTION 04220 REINFORCED CONCRETE UNIT MASONRY
SECTION 05120 STRUCTURAL STEEL
SECTION 05220 CONCRETE BOLTS
SECTION 05500 MISCELLANEOUS METALS
SECTION 16000 GENERAL ELECTRICAL REQUIREMENTS
SECTION 16050 BASIC MATERIALS AND METHODS
SECTION 16060 ELECTRICAL DEMOLITION
SECTION 16111 CONDUITS
SECTION 16123 600 VOLT CLASS CABLE
SECTION 16124 INSTRUMENTATION CLASS CABLE
SECTION 16130 OUTLET, PULL, AND JUNCTION BOXES
SECTION 16170 GROUNDING
SECTION 16195 ELECTRICAL IDENTIFICATION
SECTION 16420 SERVICE ENTRANCE SECTION
SECTION 16461 LOW-VOLTAGE TRANSFORMERS
SECTION 16470 PANELBOARDS
SECTION 16474 MOTOR CONTROL CENTERS
SECTION 16476 LOW VOLTAGE CIRCUIT BREAKERS
SECTION 16495 AUTOMATIC TRANSFER SWITCH
SECTION 16920 ELECTRICAL ACCEPTANCE TESTING

APPENDIX

APPENDIX A CHECKLIST OF LABOR LAW REQUIREMENTS
APPENDIX B CITY OF REDLANDS CONSTRUCTION WORKDAY CALENDAR
APPENDIX C CITY OF REDLANDS STANDARD PLAN AMENDMENTS
APPENDIX D CITY OF REDLANDS STANDARD SPECIFICATIONS
APPENDIX E CITY OF REDLANDS PERMITS
APPENDIX F CITY OF REDLANDS CONTRACTOR SAFETY PROGRAM
APPENDIX G GEOTECHNICAL REPORTS
APPENDIX H APPROVED GENERATOR SHOP DRAWINGS
APPENDIX I DIESEL PARTICULATE FILTER SUBMITTALS

THIS PAGE INTENTIONALLY LEFT BLANK

NOTICE INVITING SEALED PROPOSALS (NIB)
For
WATER FACILITIES GENERATORS
PROJECT NO. 501028

NOTICE IS HEREBY GIVEN that the City Council of the City of Redlands invites all and will receive sealed Proposals (Bids) at the office of the City Clerk, City of Redlands, 35 Cajon Street, Suite 4, Redlands, CA 92373, on **December 17, 2025**, up to the hour of **2:00 p.m.,** at which time they will be opened and publicly read. Bids shall be marked: **BID FOR: Water Facilities Generators, Project No. 501028.**

The City Council of the City of Redlands reserves the right to reject any and all Bids, to waive any irregularity, and award contracts in the best interests of the City.

The City of Redlands utilizes PlanetBids, a web based bid management service to manage request for bids. PlanetBids does not charge a fee to access and view current project "Request for Bids"; however, they require potential contractors, subcontractors and suppliers to provide contact information in order to download files, receive addendum notifications and to receive automatic updates or revisions to projects. PlanetBids can be accessed through the City of Redlands website at http://www.cityofredlands.org/RFP.

Proposals (Bids) shall be executed on the separately bound forms included within the "Bid Submittal Package" in accordance with the instructions contained therein.

Bid security, in the form of a cashier's check, a certified check made to the order of the City of Redlands, or a Bidder's Bond, and in an amount not less than ten percent (10%) of the amount of the Bid is required to be submitted with each Bid. Said check or bond shall be given as a guarantee that the bidder will enter into contract with the City of Redlands if awarded the work, and will be declared forfeited if the selected bidder fails to enter into contract within fourteen (14) days after Notice of Award.

The Bidder to whom award is made will be required to furnish a Labor and Material Bond and a Faithful Performance Bond each in an amount of 100% of the Bid amount, from surety company satisfactory to the City of Redlands.

Pursuant to CA Labor Code Section 1770 et seq., the successful bidder shall pay not less than the prevailing rate of per diem wages as determined by the Director of the California Department of Industrial Relations. Copies of such prevailing rate of per diem wages are available at http://www.dir.ca.gov/OPRL/PWD/. Copies of the prevailing wage determination are also on file at the City of Redlands and shall be made available to any interested party upon request.

Pursuant to provisions of Section 22300 of the California Public Contract Code, the Contractor may substitute securities for any monies withheld by the City to ensure performance of the work.

Pursuant to the provisions of Section 3300 of the California Public Contract Code, Bidders shall be licensed as "Class A", "Class C10", or "Class C8 " and provide their California State Contractor's

License numbers to the City. In addition, no contractor or subcontractor may be listed on a bid proposal for a public works project (submitted on or after March 1, 2015) unless registered with the Department of Industrial Relations pursuant to Labor Code section 1725.5 [with limited exceptions from this requirement for bid purposes only under Labor Code section 1771.1(a)]. No contractor or subcontractor may be awarded a contract for public work on a public works project (awarded on or after April 1, 2015) unless registered with the Department of Industrial Relations pursuant to Labor Code section 1725.5. This project is subject to compliance monitoring and enforcement by the Department of Industrial Relations.

All terms and conditions contained in the Contract Documents including the Instructions to Bidders shall become a part of the Contract. No Bidder may withdraw their Bid for a period of sixty (60) days after the time of Bid Opening.

All questions related to this project shall be directed to Veronica Noriega, Project Manager, at 909-798-7584 Ext 6. It shall be understood, however, that no specification interpretations will be made by telephone, nor will any products be considered for approval prior to award of the Contract. Changes, if any, will be made by addendum prior to opening of Bids.

BY ORDER OF THE CITY COUNCIL OF THE CITY OF REDLANDS, SAN BERNARDINO COUNTY, CALIFORNIA.

Jeanne Donaldson, City Clerk
City Clerk, City of Redlands
San Bernardino County, California

BID DOCUMENTS
(BD)

THIS PAGE INTENTIONALLY LEFT BLANK

INSTRUCTIONS TO BIDDERS
For
Water Facilities Generators
Project No. 501028

Bids to receive consideration shall be made in accordance with the following instructions:

1. PROPOSALS:

a. Bids shall be made upon the form of proposal furnished by the City. All Bids shall be properly executed with all items filled in; the signatures of all persons signing shall be in longhand. If the unit price and the total amount named by a Bidder for any item are not in agreement, the unit price shall be considered as representing the Bidder's intention, and the totals may be corrected by the Engineer to conform thereto. If the sum of the individual bid item's and the total amount named by a Bidder are not in agreement, the sum of the bid item's shall be considered as representing the Bidder's intention, and the totals may be corrected by the Engineer to conform thereto. If the total price written in words and the total price written in figures are not in agreement, then the total price written in words will be considered as representing the Bidder's intention, and the totals will be corrected by the Engineer to conform thereto.

b. Proposals may be rejected if they show any alterations of form, additions not called for, conditional or alternative bids, incomplete Bids, erasures, or irregularities of any kind. Mistakes shall be lined through and the correct amount written above and initialed by the authorized agent of the Bidder.

c. Bids shall be accompanied by a cashier's or a certified check or Bidder's admitted corporate surety bond, in an amount not less than ten percent (10%) of the bid, made payable to the City of Redlands. Said check or bond shall be given as a guarantee that the Bidder will enter into a contract if awarded the work. In the case of refusal or failure to enter into said Contract, within fourteen (14) days after Notice of Award by the City in writing, the security shall be applied by the City to the difference between such bid and next lowest acceptable bid and surplus, if any, shall be returned to Bidder if cash or check is used, or to Surety if bid bond is used.

d. Before submitting a bid, Bidders shall carefully examine the Plans; read the Specifications; read all other Contract documents; shall visit the site of the work; shall fully inform themselves as to all existing conditions and limitations; and include in the bid a sum to cover the cost of all items included in the Contract. No allowance will be made due to lack of examination or knowledge. The submission of a bid shall be conclusive evidence that the bidder has investigated and is satisfied as to the conditions to be encountered as to character, quality and scope of work to be performed; the quantities of materials to be furnished; and as to the requirements of the Bid Proposal, plans and specifications.

e. Pursuant to CA Labor Code Section 1770 et seq., the successful bidder shall pay not less than the prevailing rate of per diem wages as determined by the Director of the California Department of Industrial Relations. Copies of such prevailing rate of per diem wages are available at http://www.dir.ca.gov/OPRL/PWD/. Copies of the prevailing wage determination are also on file at the City of Redlands and shall be made available to any interested party upon request.

f. The bid must be submitted on or before the date and time specified in the Notice Inviting Sealed Proposals (Bids). The bid shall be submitted in a sealed envelope marked in the lower left corner as follows:

BID FOR: Water Facilities Generators,
Project No. 501028

g. Bids will be opened and publicly read aloud at the time set in the Notice Inviting Sealed Proposals (Bids), in the Office of the City Clerk, Civic Center, 35 Cajon Street, Suite 4, Redlands, California.

2. AGREEMENT AND BONDS:

The form of Contract which the successful Bidder, as Contractor, will be required to execute is included in the Contract Documents (CD) of these specifications and should be carefully examined by the Bidder. The Agreement, admitted Corporate Surety Bonds and other documents to be executed by the Contractor shall be executed in original-duplicates stamped according to law, one of which original-duplicates shall be filed with the City Clerk of the City of Redlands. The successful Bidder, simultaneously with the execution of the Agreement, will be required to furnish a faithful performance bond and a labor and material bond, each in an amount equal to one hundred percent (100%) of the Contract price. Said bonds shall provide that if the Contractor or their Subcontractor fails to pay for any materials, provision, provender or other supplies or items used in, upon, for or about the performance of the work contracted to be done, or for any work of labor thereon of any kind, or for amounts due under the Unemployment Insurance Act or Workman's Compensation, with respect to such work or labor, that the surety or sureties will pay for the same. The amount shall not exceed the sum specified in the bond, and also, in case suit is brought upon the bond, a reasonable attorney's fee to be fixed by the court. All bonds shall be secured from surety companies satisfactory to the City of Redlands and whose name is on file with the County Clerk of San Bernardino County, as an approved and financially sound surety company authorized to transact business in this state.

3. WITHDRAWAL OF BIDS:

a. Any Bidder may withdraw his Bid, only by written request, at any time prior to the scheduled time for Bid Opening.

b. No Bidder may withdraw his Bid for a period of sixty (60) days after the time of Bid Opening except as allowed by the California Public Contract Code.

4. INSURANCE AND HOLD HARMLESS REQUIREMENTS:

Before entering into a Contract, the Bidder to whom the Contract has been awarded shall furnish satisfactory evidence that they have secured all required insurance from a responsible insurance company authorized to do business in California and satisfactory to the City, and such insurance shall be maintained in full force and effect at the Contractor's own expense during the life of the Contract. Contractor shall furnish the City with the customary Certificates of Insurance for all required insurance listed below. General Liability Insurance shall name the City and the Consultant, as an additional insured and shall be primary and non-contributing to any insurance or self-insurance maintained by the City. All liability insurance policies shall bear an endorsement or shall have attached a rider whereby it is provided that, in the event of expiration or proposed cancellation of such policies for any reason whatsoever, the City shall be notified by registered mail, return receipt requested, giving sufficient time before the date thereof to comply with any applicable law or statute, but in no event less than forty five (45) days before expiration or cancellation is effective.

The coverage shall provide the following minimum limits based on the type of work proposed under this Contract. The Contractor shall determine if the proposed work requires Tier 1 or Tier 2 Insurance Requirements as follows:

CONTRACTED OPERATIONS DESIGNATED AS TIER 1		
Air Conditioning (HVAC) Systems (installation)	Electric Light or Power Line Construction	Pipeline Construction
Airport Runways (paving, repaving, etc.)	Elevator Work	Roofing
Blasting Operations	Excavation	Sandblasting
Bridge or Elevated Highway Construction	Fire Suppression Systems (installation)	Sewer and Water Main Construction
Buildings Structural Work (including elevators)	Gas Mains or Connections Construction	Sign Erection (streets)
Building Structure (raising or moving)	Geophysical Exploration	Solar Energy
Cable Installation in Conduits and Conduit Construction (streets)	Grading of Land	Street Cleaning
Caisson or Cofferdam Work	Hazardous Materials Contractors	Street or Road Construction
Dam or Reservoir Construction	Irrigation or Drainage Construction	Tank Construction, Installation, Erection or Repair
Demolition (structures)	Landscape Construction (street or street medians)	Telephone or Cable Line Construction
Drilling	Painting (exterior greater than single story)	Tree Pruning, Dusting, Spraying or Removal

TIER 1 DESIGNATED INSURANCE REQUIREMENTS

a. Commercial General Liability
   - $1 Million Per Occurrence/ $2 Million Aggregate
     - City listed as an Additional Insured on the coverage
     - Coverage is primary and non-contributory
     - If scope of work is within 50 feet of any railroad, endorsement citing inclusion of liability associated with this work is required
     - If any policy forms of endorsements are cited to grant extension of coverage, they must be included with the Certificate of Insurance submission

b. Business Auto Liability
   - $1 Million Combined Single Limit
     - City listed as an Additional Insured on the coverage
     - Must include liability arising from all owned, leased, hired, and non-owned autos
     - If any policy forms of endorsements are cited to grant extension of coverage, they must be included with the Certificate of Insurance submission
   - If Contractor or its subcontractors or suppliers haul hazardous material (including, without limitation, waste), Auto Liability insurance must be applicable to all hazardous waste hauling vehicles, and include MCS 90 and CA9948 Endorsements.

c. Commercial Umbrella/ Excess Liability
   - $5 Million Per Occurrence/ Aggregate
     - City listed as an Additional Insured on the coverage
     - Coverage is primary and non-contributory
     - If any policy forms of endorsements are cited to grant extension of coverage, they must be included with the Certificate of Insurance submission

d. Workers Compensation
   - $1 Million Per Occurrence for Bodily Injury by Accident
   - $1 Million Each Employee for Bodily Injury by Disease
   - $1 Million Policy Limit for Bodily Injury by Accident
     - Waiver of Subrogation in favor of City
     - If any policy forms of endorsements are cited to grant extension of coverage, they must be included with the Certificate of Insurance submission

e. Pollution Policy (Hazardous Materials) [If Applicable]
   - Required of Projects that involve Demolition and/or Excavation Activities
   - $1 Million Per Occurrence/ $2 Million Aggregate
   - City listed as an Additional Insured on the coverage

CONTRACTED OPERATIONS DESIGNATED AS TIER 2		
Air Conditioning (HVAC) Systems (service and repair)	Carpentry (building interiors)	Fire Suppression Systems (service and repair)
Alarms and Alarm Systems	Communications Equipment Installation (interior)	Landscape Construction
Building Interior Work (service, repair and non-structural remodeling)	Driveway, Parking Area or Sidewalk (paving or repaving)	Painting (exterior)
Cable Installation in Conduits (buildings)	Fence Erection	All Other Job Types including Vendors

TIER 2 DESIGNATED INSURANCE REQUIREMENTS

a. Commercial General Liability
   - $1 Million Per Occurrence/ $2 Million Aggregate
     - City listed as an Additional Insured on the coverage
     - Coverage is primary and non-contributory
     - If scope of work is within 50 feet of any railroad, endorsement citing inclusion of liability associated with this work is required
     - If any policy forms of endorsements are cited to grant extension of coverage, they must be included with the Certificate of Insurance submission

b. Business Auto Liability
   - $1 Million Combined Single Limit
     - City listed as an Additional Insured on the coverage
     - Must include liability arising from all owned, leased, hired, and non-owned autos
     - If any policy forms of endorsements are cited to grant extension of coverage, they must be included with the Certificate of Insurance submission
   - If Contractor or its subcontractors or suppliers haul hazardous material (including, without limitation, waste), Auto Liability insurance must be applicable to all hazardous waste hauling vehicles, and include MCS 90 and CA9948 Endorsements.

c. Workers Compensation
   - $1 Million Per Occurrence for Bodily Injury by Accident
   - $1 Million Each Employee for Bodily Injury by Disease
   - $1 Million Policy Limit for Bodily Injury by Accident
     - Waiver of Subrogation in favor of City
     - If any policy forms of endorsements are cited to grant extension of coverage, they must be included with the Certificate of Insurance submission

d. Pollution Policy (Hazardous Materials) [If Applicable]
   - Required of Projects that involve Demolition and/or Excavation Activities
   - $1 Million Per Occurrence/ $2 Million Aggregate
   - City listed as an Additional Insured on the coverage

Contractor expressly waives all rights to subrogation against the City, its officers, employees and volunteers for losses arising from work performed by Contractor for City by expressly waiving Contractor's immunity for injuries to Contractor's employees and agrees that the obligation to indemnify, defend and hold harmless provided for in this Agreement extend to any claim brought by or on behalf of any employee of Contractor. This waiver is mutually negotiated by the parties. This shall not apply to any damage resulting from the sole negligence of City, its agents and employees. To the extent any of the damages referenced herein were caused by or resulted from the concurrent negligence of City, its agents or employees, the obligations provided herein to indemnify, defend and hold harmless are valid and enforceable only to the extent of the negligence of contractor, its officers, agents and employees.

Subcontractors. The prime contractor shall include all subcontractors as insureds under its policies or shall furnish separate certificates and endorsements from each subcontractor.

The Contractor shall not assign or sublet the contract, in whole or in part, without the written consent of the City, nor shall the contractor assign any monies due to, or to become due to, Contractor hereunder without prior written consent of the City.

The Contractor shall be fully responsible to the City for the acts and omissions of the subcontractor and persons either directly or indirectly employed by the Contractor. Consent to subcontracting part of the work shall, in no way, release the Contractor from responsibility for performance of the work, and Contractor will be held, in all respects, accountable for the same as if no consent had been given. The Contractor shall give personal attention to this work which is sublet. Nothing contained in the contract documents shall create any contractual relation between any subcontractor and the City.

Hold Harmless and Indemnification. Contractor shall indemnify, hold harmless and defend City and its elected officials, agents and employees and the Consultant from and against any and all claims, losses or liability, including attorney's fees, arising from injury or death to persons or damage to property occasioned by any act, omission or failure to act of Contractor, its subcontractors, and any officers, agents and employees in performing the work required by this Agreement. Contractor's obligations under this provision shall not be limited in any way by any terms of this Agreement, or the insurance limits.

5. LICENSES AND PERMITS:

No bid will be accepted from a Contractor who is not licensed in accordance with the law under the provisions of Division III, Chapter 9 of the Business and Professions Code of the State of California.

The Contractor shall, at the time of bid opening, possess a valid "Class A", Class C10", or "Class C8" Contractor's license, and provide its California State Contractor's License number to the City.

All subcontractors listed at the time of bid opening shall possess a valid Contractor's license for the work in which they are specified to complete within the Bid Submittal Package.

The Contractor shall, prior to Notice to Proceed, procure all other permits and licenses as stipulated in the GENERAL CONDITIONS.

In addition, no contractor or subcontractor may be listed on a bid proposal for a public works project (submitted on or after March 1, 2015 or awarded on or after April 1, 2015) unless registered with the Department of Industrial Relations pursuant to Labor Code section 1725.5. Contractors shall submit proof of registration status with their bid submission to the City of Redlands. This project is subject to compliance monitoring and enforcement by the Department of Industrial Relations.

6. SUBSTITUTION OF SECURITIES:

In accordance with applicable provisions of State law, the Contractor will be permitted to substitute qualified securities in lieu of retention of withheld progress payments by the Owner.

7. SUBCONTRACTORS:

Pursuant to Section 4105 of the California Public Contract Code, the bidder may not circumvent the requirement to list subcontractors by the device of listing one subcontractor, who in turn sublets portions constituting a majority of the work covered by the contract.

A. Pursuant to California Government Code section 4106, subcontractors who will perform work or labor or render services in an amount in excess of one-half of one percent of the Contractor's total bid shall be set forth in a list of subcontractors within the bid documents. Such list shall be accompanied by an experienced statement with pertinent information regarding similar projects and other evidence of qualifications for each such subcontractor, supplier, individual, or entity if requested by City. If City or engineer, after doing an investigation, has reasonable objection to any proposed subcontractor, supplier, individual, or entity, City may, before the notice of award is given, request the apparent successful bidder to submit a substitute, without an increase in the bid.

B. If the apparent successful bidder declines to make any such substitution, City may award the contract to the next lowest bidder that proposes to use acceptable subcontractors, suppliers, individuals, or entities declining to make the request and substitutions will not constitute grounds for forfeiture of the bid security of any bidder. Any subcontractor, supplier, individual or entity so listed and against which City makes no written objection prior to the giving of the notice of award will be deemed acceptable by City subject to verification of such assessments after the effective date of the agreement as provided herein.

8. NON DEBARRED CONTRACTORS AND SUBCONTRACTORS

The Contractor and all of its subcontractors shall, at the time of bid opening and for performance of this public works contract, be non-debarred contractors and not be ineligible Contractors pursuant to Public Contract Code section 6109 and Labor Code sections 1777.1 and 1777.7.

9. LABOR LAW REQUIREMENTS

Prior to the start of construction, the Contractor and each subcontractor shall submit to the City an executed Checklist of Labor Law Requirements, included within Appendix A, certifying that each Contractor and Subcontractor will comply with the foregoing Labor Law requirements; and fully understands that failure to comply with these requirements will subject it to the penalties cited herein.

By submitting a bid, the prime contractor and subcontractors involved in this project assure that they intend to comply with the labor law requirements noted within Appendix A, fully understanding that failure to comply may subject them to penalties as noted.

10. BID PROTEST PROCEDURES

Any bid protest must be in writing and received by the City Clerk's Office at 35 Cajon Street, Suite 4, Redlands, CA 92373, before 5:00 p.m. no later than two working days following the bid opening (the "Bid Protest Deadline") and must comply with the following requirements:

10.1 General. Only a bidder who has actually submitted a Bid Proposal is eligible to submit a bid protest against another bidder. Subcontractors are not eligible to submit bid protests. A bidder may not rely on the bid protest submitted by another bidder, but must timely pursue its own protest. If required by City, the protesting bidder must submit a non-refundable fee in the amount specified by City, based upon City's reasonable costs to administer the bid protest. Any such fee must be submitted to City no later than the Bid Protest Deadline, unless otherwise specified. For purposes of this Section, a "working day" means a day that City is open for normal business, and excludes weekends and holidays as observed by the City.

10.2 Protest Contents. The bid protest must contain a complete statement of the basis for the protest and all supporting documentation. Material submitted after the Bid Protest Deadline will not be considered. The protest must refer to the specific portion or portions of the Contract Documents upon which the protest is based. The protest must include the name, address, email address, and telephone number of the person representing the protesting bidder if different from the protesting bidder.

10.3 Copy to Protested Bidder. A copy of the protest and all supporting documents must be concurrently transmitted by fax or by email, by or before the Bid Protest Deadline, to the protested bidder and any other bidder who has a reasonable prospect of receiving an award depending on the outcome of the protest.

10.4 Response to Protest. The protested bidder may submit a written response to the protest, provided the response is received by the City Clerk's Office before 5:00 p.m., within two working days after the Bid Protest Deadline or after actual receipt of the bid protest, whichever is sooner (the "Response Deadline"). The response must include all supporting documentation. Material submitted after the Response Deadline will not be considered. The response must include the name, address, email address, and telephone number of the person representing the protested bidder if different from the protested bidder.

10.5 Copy of Protesting Bidder. A copy of the response and all supporting documents must be concurrently transmitted by fax or by email, by or before the Bid Protest Deadline, to the protesting bidder and any other bidder who has a reasonable prospect of receiving an award depending upon the outcome of the protest.

10.6 Exclusive Remedy. The procedure and time limits set forth in this section are mandatory and are the bidder's sole and exclusive remedy in the event of a bid protest. A bidder's failure to comply with these procedures will constitute a waiver of any right to further pursue a bid protest, including filing a Government Code Claim or initiation of legal proceedings.

10.7 Right to Award. The City Council reserves the right to award the Contract to the bidder it has determined to be the responsible bidder submitting the lowest responsive bid, and to issue a notice to proceed with the Contract notwithstanding any pending or continuing challenge to its determination.

PROPOSAL

TO: THE CITY OF REDLANDS, SAN BERNARDINO COUNTY, CALIFORNIA herein called the "City".

Pursuant to and in compliance with your Notice Inviting Bids, and the other documents relating thereto, the undersigned Bidder, having familiarized themselves with the terms of the Contract, the local conditions affecting the performance of the Contract and the cost of the work at the place where the work is to be done, and with the plans thereto, hereby proposes and agrees to perform within the time stipulated, the Contract, including all of its component parts and everything required to be performed, and to provide and furnish any and all of the labor, materials, tools, equipment and all utility and transportation services necessary to perform the contract, and complete in a workmanlike manner, all of the work covered by the contract in connection with the City's Project identified as

Water Facilities Generators
Project No. 501028

NOTE: Bidders must bid each item in this schedule. All entries in the entire PROPOSAL must be made clearly and in ink. Mistakes shall be lined through and the correct amount written above and initialed by the authorized agent of the Bidder.

BID SCHEDULES

BASE BID – COUNTRY CLUB PUMP STATION SITE (CC)

(See "Section 01200 – Measurement and Payment" for Bid Item description)

Item No.	Brief Description	Estimated Quantity	Unit Price (If Applicable)	Total Price in Figures
1.1	Mobilization / Demobilization (Maximum 5% of Total Base Bid Price)	LUMP SUM	N/A	$_____
1.2	Demolition	LUMP SUM	N/A	$_____
1.3	Civil / Structural	LUMP SUM	N/A	$_____
1.4	Electrical / Instrumentation	LUMP SUM	N/A	$_____
1.5	Generator Diesel Particulate Filter Retrofit	LUMP SUM	N/A	$_____
1.6	Landscape	LUMP SUM	N/A	$_____
1.7	Best Management Practices	LUMP SUM	N/A	$_____
1.8	Unforeseen Work Not Covered Within All Other Bid Items	LUMP SUM	N/A	$ 75,000
	BASE BID TOTAL PRICE (ITEMS 1.1 – 1.8)			**$**_____

ADDITIVE BID "A" – AGATE PUMP STATION SITE (AG)

(See "Section 01200 – Measurement and Payment" for Bid Item description)

Item No.	Brief Description	Estimated Quantity	Unit Price (If Applicable)	Total Price in Figures
2.1	Mobilization / Demobilization (Maximum 5% of Total Base Bid Price)	LUMP SUM	N/A	$_____
2.2	Demolition	LUMP SUM	N/A	$_____
2.3	Civil / Structural	LUMP SUM	N/A	$_____
2.4	Electrical / Instrumentation	LUMP SUM	N/A	$_____
2.5	Generator Diesel Particulate Filter Retrofit	LUMP SUM	N/A	$_____
2.6	Best Management Practices	LUMP SUM	N/A	$_____
2.7	Unforeseen Work Not Covered Within All Other Bid Items	LUMP SUM	N/A	$ 75,000
	ADDITIVE BID "A" TOTAL PRICE (ITEMS 2.1 – 2.7)			**$_____**

ADDITIVE BID "B" – 5th AVE PUMP STATION SITE (FA)

(See "Section 01200 – Measurement and Payment" for Bid Item description)

Item No.	Brief Description	Estimated Quantity	Unit Price (If Applicable)	Total Price in Figures
3.1	Mobilization / Demobilization (Maximum 5% of Total Base Bid Price)	LUMP SUM	N/A	$_____
3.2	Demolition	LUMP SUM	N/A	$_____
3.3	Civil / Structural	LUMP SUM	N/A	$_____
3.4	Building Retrofit	LUMP SUM	N/A	$_____
3.5	Electrical / Instrumentation	LUMP SUM	N/A	$_____
3.6	Generator Diesel Particulate Filter Retrofit	LUMP SUM	N/A	$_____
3.7	Best Management Practices	LUMP SUM	N/A	$_____
3.8	Unforeseen Work Not Covered Within All Other Bid Items	LUMP SUM	N/A	$ 205,000
	ADDITIVE BID "B" TOTAL PRICE (ITEMS 3.1 – 3.8)			**$_____**

ADDITIVE BID "C" – TEXAS ST PUMP STATION SITE (TS)

(See "Section 01200 – Measurement and Payment" for Bid Item description)

Item No.	Brief Description	Estimated Quantity	Unit Price (If Applicable)	Total Price in Figures
4.1	Mobilization / Demobilization (Maximum 5% of Total Base Bid Price)	LUMP SUM	N/A	$_____
4.2	Demolition	LUMP SUM	N/A	$_____
4.3	Civil / Structural	LUMP SUM	N/A	$_____
4.4	Electrical / Instrumentation	LUMP SUM	N/A	$_____
4.5	Generator Diesel Particulate Filter Retrofit	LUMP SUM	N/A	$_____
4.6	Best Management Practices	LUMP SUM	N/A	$_____
4.7	Unforeseen Work Not Covered Within All Other Bid Items	LUMP SUM	N/A	$ 105,000
	ADDITIVE BID "C" TOTAL PRICE (ITEMS 4.1 – 4.7)			**$_____**

BID SUMMARY TABLE
BASE BID AND ADDITIVE BID ITEM TOTALS

BASE BID	**Total (in figures)**
Base Bid Total: (Transfer from BD 11)	$_____
Last Minute Additions/Deductions* for Bid Item No. _____ (specify No.)	$_____
Base Bid Total plus all Last Minute Additions/Deductions noted prior to this sum: _____ (written in words)	$_____
BASE BID PLUS ADDITIVE BID "A"	**Total (in figures)**
Additive Bid "A" Total: (Transfer from BD 12)	$_____
Last Minute Additions/Deductions* for Bid Item No. _____ (specify No.)	$_____
Base Bid Total plus Additive Bid "A" Total plus all Last Minute Additions/Deductions noted prior to this sum: _____ (written in words)	$_____
BASE BID PLUS ADDITIVE BID "A" AND "B"	**Total (in figures)**
Additive Bid "B" Total: (Transfer from BD 13)	$_____
Last Minute Additions/Deductions* for Bid Item No. _____ (specify No.)	$_____
Base Bid Total plus Additive Bid "A" and "B" Total plus all Last Minute Additions/Deductions noted prior to this sum: _____ (written in words)	$_____
BASE BID PLUS ADDITIVE BID "A" AND "B" AND "C"	**Total (in figures)**
Additive Bid "C" Total: (Transfer from BD 14)	$_____
Last Minute Additions/Deductions* for Bid Item No. _____ (specify No.)	$_____

Base Bid Total plus Additive Bid "A" and "B" and "C" Total plus all Last Minute Additions/Deductions noted prior to this sum: _____ (written in words)	$_____


Values that will be read aloud during bid opening.

Last Minute Additions/Deductions*_____ Bid Item No._____

Last Minute Additions/Deductions*_____ Bid Item No._____

Last Minute Additions/Deductions*_____ Bid Item No._____

BID SCHEDULE TOTAL PRICE FOR ALL FOUR PROJECT SITES:

$_____

BID SCHEDULE TOTAL PRICE WRITTEN IN WORDS: _____

_____

_____

* Provision is made here for the Bidder to include an addition or deduction in its bid, if it wishes, to reflect any last-minute adjustments in prices. The addition or deduction, if made, will be proportionately applied to the Progress Payments total for the respective item in the Schedule of Prices, the amount being added or deducted for each monthly payment. The unit prices entered in the Schedule of Prices will not be affected.

LOW BID DETERMINATION:
The low bid will be determined pursuant to Public Contract Code Section 20103.8 (c) as the lowest bid price on the Base Bid Total of the Bid Summary Table. If available funding allows for additional work, then the low bid determination will be re-evaluated as the lowest bid on the Base Bid plus Additive Bid "A" line within the Bid Summary Table. If available funding allows for additional work, then the low bid determination will be re-evaluated as the lowest bid on the Base Bid plus Additive Bid "A" and Additive Bid "B" line within the Bid Summary Table. If available funding allows for additional work, then the low bid determination will be re-evaluated as the lowest bid on the Base Bid plus Additive Bid "A" and Additive Bid "B" and Additive Bid "C" line within the Bid Summary Table.

The amount of available funding will be made available prior to opening of the first bid.

A responsible bidder who submits the lowest bid as determined by the above method shall be awarded the contract, if it is awarded, by the City Council of the City of Redlands. Bid Bond shall be 10 percent of Base Bid plus Additive Bid "A" and "B" and "C" line of the Bid Summary Table.

ADDENDA

Receipt of the following addenda is hereby acknowledged and the same is included in the Bid Price:

Addendum #1_____ (initials) Addendum #2_____ (initials) Addendum #3_____ (initials)

Addendum #4_____ (initials) Addendum #5_____ (initials) Addendum #6_____ (initials)

ATTEST: (if Corporation)

(Corporation Seal)

_____	_____
Company Name	Signature
_____	_____
Address	Name
_____	_____
City, State, Zip	Title

BID CERTIFICATION

The undersigned certifies that they are familiar with the various State and local laws affecting labor, length of working days, employer's liabilities, Sunday work, alien labor, domestic materials, Subcontractors, etc.

It is understood and agreed that the work under the contract will be commenced by the undersigned Bidder, if awarded the contract, within ten (10) calendar days from the date in the Notice to Proceed and will be completed by the Contractor in the time set forth in the **CONTRACT**.

Enclosed find Bidders bond or certified or cashier's check No. _____ on the _____ Bank, in the amount of _____ _____ which is not less than ten percent (10%) of the Bid submitted by the undersigned, made payable to the City of Redlands, California and which is given as a guarantee that the Bidder agrees that in case of their default in executing said contract with necessary bonds, the bond or check accompanying this Bid and the money made payable shall become and remain the property of the City of Redlands.

It is understood and agreed that the City of Redlands has the right to waive defects or irregularities and to accept or reject any or all Bids. No Bidder may withdraw their Bid for a period of sixty (60) days after the time of the Bid Opening except as allowed by the California Public Contract Code.

The following information, required by State law under penalty of perjury, is true and correct. Failure to complete this information renders the bid non-responsive, and the bid must be rejected.

_____	_____
Company Name	Signature
_____	_____
Address	Signatory's Title
_____	_____
City, State, Zip	State License Number and Class
_____	_____
Telephone Number	License Expiration Date

Dated this _____ day of _____, 20___.

BID BOND

KNOW ALL PERSONS BY THESE PRESENTS,

That _____ as Principal, and _____ as Surety, are held and firmly bound unto the City of Redlands, hereinafter called City, in the sum of _____ dollars, for the payment of which sum well and truly to be made, we bind ourselves, our heirs, executors, administrators, successors, and assigns, jointly and severally, firmly by these presents.

WHEREAS, said Principal has submitted a bid to said City to perform all work required under the Project No. 501028.

NOW, THEREFORE, if said Principal is awarded a contract by said City and, within the time and in the manner required under the heading "Instructions to Bidders" bound with said Specifications, enters into a written contract on the form of agreement bound with said Specifications and furnishes the required bonds, one to guarantee faithful performance and the other to guarantee payment for labor and materials; then this obligations shall be null and void, otherwise it shall remain in full force and effect. In the event suit is brought upon this bond by said City and Judgment is recovered, said Surety shall pay all costs incurred by said City in such suit, including a reasonable attorney's fee to be fixed by the court.

SIGNED AND SEALED, this _____ day of _____, 20____.

_____**(SEAL)**
(Principal)

By:_____
(Signature)

_____**(SEAL)**
(Surety)

By:_____
(Signature)

Address:_____

_____

Telephone (___)_____

(Seal and Notarial Acknowledgment of Surety)

STATEMENT BY BIDDER
NON-COLLUSION AFFIDAVIT

STATE OF)
) ss
COUNTY OF)

_____, being first duly sworn, deposes and says that

he is
(Sole Owner, a Partner, President, Secretary, etc.)

of
(Contractor)

the party making the foregoing bid on Project No. 501028 that such bid is not made in the interest of or on behalf of any undisclosed person, partnership, company, association, organization, or corporation; that the bid is genuine and not collusive or sham; that the Bidder has not directly or indirectly induced or solicited any other Bidder to put in a false or sham bid, and has not directly or indirectly colluded, conspired, connived, or agreed with any Bidder or anyone else to put in a sham bid, or that anyone shall refrain from bidding; that the Bidder has not in any manner, directly or indirectly, sought by agreement, communication, or conference with anyone to fix the bid price of the Bidder or of any other Bidder or to fix any overhead, profit, or cost element of the bid price or of that of another bidder, or to secure any advantage against the public body awarding the Contract of anyone interested in the proposed contract; that all statements contained in such bid are true; and further, that the Bidder has not directly or indirectly, submitted his bid price or any breakdown thereof, or the contents thereof, or divulged information or data relative thereto, or paid, and will not pay, any fee to any corporation, partnership, company, association organization, bid depository, or to any member or agent thereof to effectuate a collusive or sham bid.

By: _____ Title: _____

Subscribed and sworn to before me this _____ day of _____, 20___.

Signature of Officer Administering Oath
(Notary Public)

STATEMENT BY BIDDER
OFFICERS OF CORPORATION (Members of Firm)

The names of all persons interested in the foregoing proposals as principals, are as follows: (IMPORTANT NOTICE - if Bidder or other interested person is a corporation, state legal name of corporation, also names of the president, secretary, treasurer and manager thereof; if a co-partnership, state true name of firm, also names of all individual co-partners composing firm; if Bidder or other interested person is an individual, state first and last names in full).

_____ _____

_____ _____

_____ _____

Licensed in accordance with an act providing for the Registration of Contractors, License

No. _____.

Signature of Bidder _____ Dated_____

NOTE: If Bidder is a corporation, the legal name of the corporation shall be set forth above, together with the signature of the officer(s) authorized to sign contracts on behalf of the corporation; if Bidder is a co-partnership, the true name of the firm shall be set forth above, together with the signature of the partner or partners authorized to sign contracts in behalf of the co-partnership, and if the Bidder is an individual, that signature shall be placed above.

STATEMENT BY BIDDER
SUB-CONTRACTORS LIST

Bidder supplies the following information for any Subcontractor who will perform work or labor or render services to the prime contractor, etc. to be used on Project No. 501028, all in accordance with Section 4104 of the California Public Contract Code.

LICENSED SUBCONTRACTOR'S NAME AND BUSINESS ADDRESS	LICENSE #	SPECIFIC DESCRIPTION OF SUBCONTRACT & BID ITEM #	% OF BID ITEM TO BE PERFORMED

STATEMENT BY BIDDER
QUALIFICATION AND EXPERIENCE STATEMENT

The following outline is a record of the undersigned Bidder's and its subcontractors experience in construction of three (3) projects of a type similar in magnitude and character to that contemplated under Project No. 501028 within the past two years. Include the location of each project as well as the name, address, and phone number of the owner, and name of individual to contact.

Subcontractors performing in excess of one half of one percent of the prime Contractor's total bid, or in the construction of streets or highways, one half of one percent of the prime contractor's total bid or ten thousand dollars ($10,000), whichever is greater shall provide a similar outline. Additional pages outlining this portion of the Bid may be attached. Failure to provide this statement may result in rejection of the bid by the City of Redlands.

1. Owner's Name: _____

   Contact Person: _____ Phone: (___) _____

   Address of Owner: _____

   Project Description: _____

   _____

   Amount of Contract: _____ Completion Date: _____

2. Owner's Name: _____

   Contact Person: _____ Phone: (___) _____

   Address of Owner: _____

   Project Description: _____

   _____

   Amount of Contract: _____ Completion Date: _____

3. Owner's Name: _____

   Contact Person: _____ Phone: (___) _____

   Address of Owner: _____

   Project Description: _____

   _____

   Amount of Contract: _____ Completion Date: _____

STATEMENT BY BIDDER
GENERAL INFORMATION

1. Bidder's Mailing Address _____

   _____

2. Number of years engaged in the contracting business under your present firm or trade name:

   _____

3. Have you ever failed to complete any work awarded to you? (Yes or No) _____. If yes, provide details in the space provided in Item 10.

4. Have you ever defaulted on a contract? (Yes or No) _____. If yes, provide details in the space provided in Item 10.

5. Have you ever been a party to a lawsuit or gone to arbitration during the last 5 years? (Yes or No) _____. If yes, provide details in the space provided in Item 10.

6. Has any Stop Notice been filed against you during the last 5 years? (Yes or No) ___. If yes, provide details in the space provided in Item 10.

7. Has your contractor's license ever been suspended, revoked, or subject to disciplinary action? (Yes or No) _____. If yes, provide details in the space provided in Item 10.

8. Contracts currently on hand:

Agency Name	Amount of Contract	Start Date	Completion Date

9. Enter the name of person(s) who inspected the site of the proposed work for your firm and the date of said site inspection.

   Name:_____ Date:_____

10. In the space provided, the Bidder shall provide details concerning any "Yes" answers provided in this "General Information" section. Details shall include, but not be limited to, the nature of dispute, name of the agency involved and the final outcome. If requested by the City, the Bidder shall supply additional information, sufficiently detailed, to permit evaluation of the Bidder's ability to perform the work.

Question Number	Details

CONTRACT DOCUMENTS
(CD)

THIS PAGE INTENTIONALLY LEFT BLANK

PUBLIC WORK CONSTRUCTION CONTRACT

This Public Work Construction contract ("Contract") is made and entered into this ___ day of _____, 20__, by and between the City of Redlands, a municipal corporation, organized and existing under the laws of the State of California (hereinafter "City"), and _____ (hereinafter "Contractor"). City and Contractor are sometimes individually referred to herein as a "Party" and, together, as the "Parties."

In consideration of the mutual promises contained herein, City and Contractor agree as follows:

1. **SCOPE OF WORK:** Contractor shall furnish all materials and will perform all of the work for the following: Water Facilities Generators, complete all items as required by the Contract Documents (as herein defined) and Specifications for City's Water Facilities Generators, Project No. 501028 (the "Work").

2. **CONTRACT SUM:** City shall pay Contractor the sum of _____ dollars ($_____) as consideration for its performance of the Work in accordance with the terms and conditions set forth in the Contract Documents. Pursuant to Public Contract Code Section 22300, Contractor has the option to deposit securities with an escrow agent as a substitute for retention of earnings required to be withheld by City pursuant to an escrow agreement as set forth in Public Contract Code section 22300.

3. **TIME FOR COMPLETION:** The Work shall be completed within Two Hundred (200) working day(s) as defined in Section 1-2 of the Standard Specifications for Public Works Construction "Greenbook" from and after the date of City's issuance of a Notice to Proceed to Contractor.

4. **LIQUIDATED DAMAGES:** Contractor's failure to complete the Work within the time allowed will result in damages being sustained by City. Such damages are, and will continue to be, impracticable and extremely difficult to determine. Accordingly, Contractor shall pay to City, or have withheld from monies due to Contractor, the sum of five hundred dollars ($500) for each working day as defined in Section 1-2 of the Standard Specifications for Public Works Construction "Greenbook" in excess of the specified time for completion of the Work. Execution of this Contract shall constitute agreement by City and Contractor that five hundred dollars ($500) per day is the estimated damage to City caused by the failure of Contractor to complete the work within the allowed time. Such sum is liquidated damages and shall not be construed as a penalty, and may be deducted from payments due Contractor if such delay occurs.

5. **CONTRACT DOCUMENTS:** This Contract incorporates by reference the following: Notice Inviting Bids, Instructions to Bidders, Contractor's Proposal, Bid Bond, Agreement, Performance Bond, Labor and Material Bond, Plans, General Conditions, Special Provisions and Specifications, and any addenda thereto (collectively, the "Contract Documents").

6. **ATTORNEYS' FEES:** In the event any action is commenced to enforce or interpret the terms or conditions of this Contract, or the Contract Documents, the prevailing Party in such action, in addition to any costs and other relief, shall be entitled to recover its reasonable attorneys' fees, including fees for use of in-house counsel by a Party.

7. **RESOLUTION OF CONSTRUCTION CLAIMS:** Claims by Contractor in the amount of three hundred seventy five thousand dollars ($375,000) or less shall be made by Contractor and processed by the City pursuant to the provisions of Part 3, Chapter 1, Article 1.5 of the Public

Contract Code (commencing with Section 20104). All claims shall be in writing and include the documents necessary to substantiate the claim. Nothing in subdivision (a) of Public Contract Code Section 20104.2 shall extend the time limit or supersede the notice requirements provided in this case from filing claims by Contractor.

8. **ELIGIBILITY OF CONTRACTOR/SUBCONTRACTOR:** Contractor and all of its subcontractors shall abide by California Public Contract Code, Section 6109, and California Labor Code Sections 1777.1 and/or 1777.7, and certify that they are not debarred and are eligible to work on this project.

9. **ASSIGNMENT OF AGREEMENT:** No assignment by a Party of any rights or interests under this Contract shall be binding on another Party without the written consent of the Party sought to be bound.

10. **SUCCESSORS AND ASSIGNS:** City and Contractor each binds itself and their respective successors and assigns in respect to all covenants, agreements, and obligations contained in the Contract Documents.

11. **SEVERABILITY:** Any provision or part of the Contract Documents held to be void or unenforceable under any law or regulation shall be deemed stricken, and all remaining provisions shall continue to be valid and binding upon City and Contractor.

IN WITNESS WHEREOF, the Parties hereto have executed this Contract the day and year first written above.

CITY OF REDLANDS

(SEAL)

By:_____
Mario Saucedo, Mayor

ATTEST:

_____
Jeanne Donaldson, City Clerk

(SEAL)

_____
Name of Contractor

By:_____
Signature of Authorized Agent

_____
Title

_____
Signature of Authorized Agent (if necessary)

_____
Title

_____
Contractor's License No.

WORKER'S COMPENSATION INSURANCE CERTIFICATION

Description of Contract: City of Redlands
Municipal Utilities & Engineering Department
Water Facilities Generators
Project No. 501028

Every employer, except the State, shall secure the payment of compensation in one or more of the following ways:

a. By being insured against liability to pay compensation by one or more insurers duly authorized to write compensation insurance in this State.
b. By securing from the Director of Industrial Relations, a certificate of consent to self-insure, either as an individual employer, or as one employer in a group of employers, which may be given upon furnishing proof satisfactory to the Director of Industrial Relations of ability to self-insure and to pay any compensation that may become due to his or her employees.

CHECK ONE

_____I am aware of the provisions of Section 3700 of the Labor Code which requires every employer to be insured against liability for Workers' Compensation or to undertake self-insurance in accordance with the provisions of that Code, and I will comply with such provisions before commencing the performance of the work and activities required or permitted under this Agreement. (Labor Code §1861).

_____I affirm that at all times, in performing the work and activities required or permitted under this Agreement, I shall not employ any person in any manner such that I become subject to the workers' compensation laws of California. However, at any time, if I employ any person such that I become subject to the workers' compensation laws of California, immediately I shall provide the City with a certificate of consent to self-insure, or a certification of workers' compensation insurance.

I certify under penalty of perjury under the laws of the State of California that the information and representations made in this certificate are true and correct.

Dated this _____ day of _____, 2025.

_____
(Contractor)

_____
(Signature)

_____
(Official Title)

(SEAL)

(Labor Code Section 1861 provides that the above certificate must be signed and filed by the Contractor with the Owner prior to performing the work of the contract.)

FAITHFUL PERFORMANCE BOND

Whereas, the City of Redlands ("City"), State of California, and _____ (hereinafter designated as "Principal") have entered into an agreement dated _____, 2025 ("Agreement") whereby Principal agrees to install and complete certain public improvements (the "Work"), which said Agreement is identified as Water Facilities Generators, Project No. 501028 and is hereby referred to and made a part hereof; and

Whereas, said Principal is required under the terms of the Agreement to furnish a bond for the faithful performance of the Work, now, therefore, we, the Principal and, _____, as Surety, are held and firmly bound unto the City in the penal sum of _____ dollars ($_____) lawful money of the United States, for the payment of which sum we bind ourselves, and our heirs, successors, executors and administrators, jointly and severally, firmly by these presents.

The condition of this obligation is such that if the above bounded Principal, his or its heirs, executors, administrators, successors or assigns, shall in all things stand to and abide by, and well and truly keep and perform the covenants, conditions and provisions in the Agreement and any alteration thereof made as therein provided, on his or its part, to be kept and performed at the time and in the manner therein specified, and in all respects according to their true intent and meaning, and shall faithfully fulfill the one-year guarantee of all materials and workmanship, and shall defend, indemnify and save harmless the City and its elected officials, officers, agents and employees, as therein stipulated, then this obligation shall become null and void; otherwise it shall be and remain in full force and effect.

As a part of the obligation secured hereby and in addition to the face amount specified therefor, there shall be included costs and reasonable expenses and fees, including reasonable attorneys' fees, incurred by the City in successfully enforcing such obligations, all to be taxed as costs and included in the judgment rendered.

As a condition precedent to the satisfactory completion of the Work, the above obligation shall hold good for a period of one (1) year or longer if required by the Agreement after the acceptance of the work by the City, during which time if the Principal shall fail to make full, complete, and satisfactory repair and replacements and totally protect the City from loss or damage made evident during this period from the date of completion of the Work, and resulting from or caused by defective materials or faulty workmanship, the above obligation in penal sum thereof shall remain in full force and effect. The obligations of Surety hereunder shall continue so long as any obligation of the Principal remains.

Whenever the Principal shall be, and is declared by the City to be, in default under the Agreement, the City having performed the City obligations thereunder, the Surety shall promptly remedy the default, or shall promptly, at the City's option:

1. Complete the Work in accordance with its terms and conditions; or

2. Obtain a bid or bids for completing the Work in accordance with its terms and conditions, and upon determination by Surety of the lowest responsive and responsible bidder, arrange for a contract between such bidder and the City, and make available as work progresses sufficient funds to pay the cost of completion of the Work less the balance of the Agreement price, but not exceeding, including other costs and damages for which Surety may be liable hereunder, the

amount set forth above. The term "balance of the Agreement price," as used in this paragraph, shall mean the total amount payable to the Principal by the City under the Agreement and any modifications thereto, less the amount previously properly paid by the City to the Principal.

Surety expressly agrees that the City may reject any contractor or subcontractor which may be proposed by Surety in fulfillment of its obligations in the event of default by the Principal.

Surety shall not utilize the Principal in completing the Work nor shall Surety accept a bid from the Principal for completion of the Work if the City, when declaring the Principal in default, notifies Surety of the City's objection to the Principal's further participation in the completion of the Work.

No right of action shall accrue on the bond to or for the use of any person or corporation other than the City named herein or the successors or assigns of the City. Any suit under this bond must be instituted within the applicable statute of limitations period.

The said Surety, for value received, hereby stipulates and agrees that no change, extension of time, alteration or addition to the terms of the Agreement or to the work to be performed thereunder or the Specifications accompanying the same shall in any way affect its obligations on this bond, and it does hereby waive notice of any such change, extension of time, alteration or addition to the terms of the Agreement or to the work or to the specifications.

No final settlement between the City and the Principal shall abridge the right of any beneficiary hereunder whose claim may be unsatisfied.

The Principal and Surety agree that if the City is required to engage the services of any attorney in connection with the enforcement of this bond, each shall pay the City's reasonable attorneys' fees incurred, with or without suit, in addition to the above sum.

In witness whereof, this instrument has been duly executed by the Principal and Surety above named, on _____, 2025.

(SEAL)	(SEAL)
_____	_____
(Contractor)	(Surety)
_____	BY: _____
(Signature)	(Signature)
	Address:_____
	_____
(Seal and Notarial Acknowledgment of Surety)	Telephone ( )_____

LABOR AND MATERIAL BOND

Whereas, the City Council of the City of Redlands, State of California, and _____ (hereinafter designated as "Principal") have entered into an agreement (the "Agreement") whereby Principal agrees to install and complete certain designated public improvements (the "Work"), which said agreement, dated _____, 2025, and identified as Water Facilities Generators, Project No. 501028 is hereby referred to and made a part hereof; and

Whereas, under the terms of the Agreement, Principal is required before commencing the performance of the Work, to file a good and sufficient Labor and Material bond with the City of Redlands to secure the claims to which reference is made in Title 3 (commencing with Section 9550) of Part 6 of Division 4 of the Civil Code of the State of California.

Now, therefore, said Principal and the undersigned as corporate surety, are held firmly bound unto the City and all contractors, subcontractors, laborers, material men and other persons employed in the performance of the Agreement and referred to in the aforesaid Code of Civil Procedure in the sum of _____ dollars ($_____) for materials furnished or labor thereon of any kind, or for amounts due under the Unemployment Insurance Act with respect to such work or labor, that said surety will pay the same in an amount not exceeding the amount hereinabove set forth, and also in case suit is brought upon this bond, will pay, in addition to the face amount thereof, costs and reasonable expenses and fees, including reasonable attorneys' fees, incurred by the City in successfully enforcing such obligation, to be awarded and fixed by the court, and to be taxed as costs and to be included in the judgment therein rendered.

It is hereby expressly stipulated and agreed that this bond shall insure to the benefit of any and all persons, companies and corporations entitled to file claims under Title 3 (commencing with Section 9550) of Part 6 of Division 4 of the Civil Code, so as to give a right of action to them or their assigns in any suit brought upon this bond.

Should the condition of this bond be fully performed, then this obligation shall become null and void, otherwise it shall be and remain in full force and effect.

The surety hereby stipulates and agrees that no change, extension of time, alteration or addition to the terms of the Agreement or the specifications accompanying the same shall in any manner affect its obligations on this bond, and it does hereby waive notice of any such change, extension of time, alteration or addition.

In witness whereof, this instrument has been duly executed by the Principal and surety above named, on _____, 2025.

(SEAL)	(SEAL)
_____	_____
(Contractor)	(Surety)
_____	BY: _____
(Signature)	(Signature)
	Address: _____
(Seal and Notarial Acknowledgement of Surety)	_____
	Telephone: ( )_____

THIS PAGE INTENTIONALLY LEFT BLANK

GENERAL CONDITIONS
(GC)

THIS PAGE INTENTIONALLY LEFT BLANK

GENERAL CONDITIONS

The Standard Specifications for Public Works Constructions, 2021 Edition (Greenbook), together with supplements as published by Building News, Inc., are modified herein and comprise the Standard Specifications. For convenience, the section and subsection numbering system used in these modifications correspond to those used in the Greenbook. Unless specifically deleted or modified herein, all requirements of the Greenbook shall prevail.

SECTION 1 – GENERAL, TERMS, DEFINITIONS, ABBREVIATIONS, UNITS OF MEASURE, AND SYMBOLS

1-2 TERMS AND DEFINITIONS.

Agency - *Amend as follows:*
"The legal entity (City) for which the Work is being performed."

Bidder - *Amend as follows:*
"Any individual, firm, partnership, corporation, or combination thereof, licensed in accordance with the provisions of Chapter 9, Division III of the Business and Professions Code, submitting a Bid for the Work, acting directly or through a duly authorized representative."

City. The City of Redlands, San Bernardino County, California, being the legal entity for which the Work is being performed. Also referred to as Agency or Owner.

City Council. The City Council of the City of Redlands, San Bernardino County, California, being the body authorizing entrance into legal agreements and allowing work in public right-of-way or on public property controlled by the City of Redlands. Also referred to as Board.

Engineer - *Amend as follows:*
"The City Engineer of the Agency, or other person designated by the City Engineer, acting either directly or through authorized agents."

Fabricated. An item specifically assembled or made out of selected materials to meet individual design requirements.

Guarantee. See Warranty.

Laboratory. The designated laboratory authorized by the City of Redlands to test materials and work involved in the Contract.

Manufactured. A standard mass-produced unit or item meeting design requirements.

Owner. The City of Redlands, San Bernardino County, California.

Pavement. The uppermost layer of material placed on the traveled way or shoulder. Also referred to as surfacing.

Rain Day. A scheduled working day when you cannot perform work on the controlling activity for at least 50 percent of the day with at least 50 percent of the normal labor and equipment due to adverse weather-related conditions that cause the Contractor to dismiss the crew.

Street - *Delete and replace with the following:*
"Any road, highway, parkway, freeway, avenue, street, lane, alley, crossing, intersection, court, place, circle, walk, way, or any public right-of-way within the jurisdiction of the Agency."

Surety - *Delete and replace with the following:*
"An admitted corporate surety as listed by the United States Department of Treasury and duly licensed to conduct business in the State of California and County of San Bernardino and acceptable to the City of Redlands, bound with and for the Contractor for the acceptable performance, execution, and completion of the Work, and for the satisfaction of all obligations incurred."

Warranty. An extended insurance by the Contractor, of any product or item of work installed as a part of this project for replacement and/or repair for the time period specified, including but not limited to, all parts, labor, materials, tools, equipment costs, etc. necessary for the product or item of work to be in proper and acceptable working condition after completion of the project. For the purposes of this Contract, the period of coverage shall begin on the date of the Notice of Completion filed by the Owner.

Working Hours. Unless specified otherwise, working hours shall be from 7:00 AM to 4:00 PM, Monday through Friday, inclusive. Saturdays, Sundays, and City Holidays, as shown on the current year Construction Schedule, are excluded unless authorized by the City.

1-7.2 CONTRACT BONDS. - *Add the following sentence to paragraph 1:*
The warranty provisions set forth in Section 7-18 shall be secured by the Contract Performance Bond required under this section and said Bond shall remain in full force and effect for a period of one year from the date of completion as specified in the Notice of Completion.

SECTION 2 - SCOPE OF THE WORK

2-2 PERMITS. - *Amend the following:*

Amend the first sentence of paragraph 1 as follows:
"The Contractor will obtain all permits necessary to perform the work."

Add the following sentence between the first and second sentences of paragraph 1:
For all work within Caltrans right-of-way, the Contractor shall obtain their own Caltrans Encroachment Permit and pay all necessary permit and inspection fees as required by Caltrans.

Add the following paragraph:

The Contractor shall, prior to the start of work, procure all permits and licenses, including but not limited to, a City Business License for itself, subcontractors, and all parties performing actions associated with this contract within the City of Redlands, City Building Permit, USA Verification Number, DOSH Excavation Permit, other permits required by agencies and/or utilities having jurisdiction on the work, pay all charges and fees required by the City, other agencies and utilities, and give all notices necessary and incidental to the due and lawful prosecution of the work. All City permits associated with this project are no fee to the Contractor.

SECTION 3 - CONTROL OF THE WORK

3-7 CONTRACT DOCUMENTS.

3-7.1 General. – *Add the following paragraphs:*
Contractor's working drawings or plans for any structure not included in the plans shall be approved by the Engineer before any work is performed. It is mutually agreed that approval by the Engineer of the Contractor's working plans does not relieve the Contractor of any responsibility for accuracy of dimensions and details, and that the Contractor shall be responsible for agreement and conformity of their working plans with the approved plans and specifications.

Finished surfaces in all cases shall conform with the lines, grades, cross sections, and dimensions shown on the approved plans. Deviations from the approved plans will be determined by the Engineer and approved in writing. In the event of a discrepancy between any drawing and the figures written thereon, the figures shall be taken as correct.

Should it appear that the work to be done or any matter thereto is not sufficiently detailed or explained by the plans and specification, the Contractor shall apply to the Engineer for such further explanation as may be necessary and shall conform to such explanation or interpretation as part of the Contract so far as may be consistent with the intent of the original plans and specifications.

3-7.1.1 Preconstruction Meeting. The Contractor to whom the contract is awarded, and all his major subcontractors, shall attend a pre-construction meeting. The time and location of said meeting will be set by the City. Contractor will be given adequate notice of such meeting. It shall be the Contractor's responsibility to notify his subcontractors of the time and location of the meeting. All submittals as required under the General Requirements shall be submitted by the Contractor at the time of the meeting.

The Contractor will be provided with an electronic (.PDF file) of the conformed plans and specifications for their use throughout the project. Contractor is responsible for all costs of reproduction.

Progress meetings will be scheduled by the City. The Contractor will be given at least five working days notice of the time and location of said meetings. The Contractor has the responsibility of notifying his subcontractors, suppliers, and fabricators of the time and location of said meetings. Meetings will be held either at the job site, at the offices of the City of Redlands, or at any other location approved by the City. The Contractor may request, in writing, that a meeting be held.

The City will schedule a meeting at the Contractor's request not more than five working days after receiving said written notice.

3-7.2 Precedence of Contract Documents. – *Replace paragraph 2 with the following:*
The precedence shall be (A. being highest, O. being lowest):

A. Permits from other Agencies as may be required by law.
B. Change Orders.
C. Contract.
D. Addenda.
E. Bid Schedule/Proposal.
F. General Requirements.
G. Technical Specifications.
H. Plans.
I. MUED General Permit Conditions and Trench Specifications.
J. City of Redlands Water & Sewer Systems Standard Specifications.
K. General Conditions.
L. City of Redlands Standard Specifications and Detail Drawings for Design and Construction of Public Improvements and all Supplements
M. Standard Specifications for Public Works Construction (SSPWC), 2018 Edition
N. Standard Plans for Public Works Construction, 2012 Edition
O. Reference Specifications.

3-8.7 Record Drawings. The Contractor shall maintain at the job site, a set of record drawings for the work showing: exact location information of all existing underground utilities encountered, final locations determined in the field, any deviations from the plans and specifications and new work performed within the work area; and all differences between the work as drawn and as installed for all concealed work as well as work added which is not shown on the drawings. Concealed work shall mean all work installed underground or in an area which cannot be readily inspected by use of access panels, inspection plates or other removable features. When vacuum excavation (potholing) services are required, contractor to provide report that identifies depth and alignment of underground utilities.

These record drawings shall be kept current and legible, and shall be available for inspection at all times by the Engineer, Architect and Contractor. All information, changes in the work or work added on these record drawings shall be marked in red. All markings shall use the same legends that are used on the drawings. Indicate locations by exact dimensions and elevations. Give dimensions and elevations from a permanent reference point and prepare all changes to scale.

At the end of construction, the contractor shall prepare one set of marked-up prints of the record drawings indicating any and all revisions and changes to the drawings reflecting As-Built conditions. The drawings shall also contain a listing of all subcontractors who worked on the construction project. The As-Built drawings will be submitted to the Municipal Utilities and Engineering Department for review and approval by the City Inspector and Engineer.
The design engineer or City staff shall prepare the final As-Built drawings for record purposes in one of the following two ways: (1) Check out the original drawings from the City and manually revise the drawings to reflect the As-Built condition; or (2) Re-plot the original drawings electronically on 4 mil

mylars and make revisions electronically to reflect the As-Built conditions. The final As-Built drawings will be reviewed and approved by the City Inspector and Engineer

The construction related bonds will not be released by the City until the As-Built drawings are accepted by the Engineer and all City stipulated conditions for the release of the bonds have been satisfied.

3-10 SURVEYING.

3-10.3 Line and Grade. - *Add the following sentences to paragraph 1:*
All distances and measurements shown are and will be made in a horizontal plane. Construction line and grade staking shall be set at maximum intervals of 25 feet when the grade is 0.50 percent or greater. Construction line and grade staking shall be set at maximum intervals of 12 feet when the grade is less than 0.50 percent.

3-10.4 Permanent Survey Markers.
The Registered (licensed) Land Surveyor or Registered Civil Engineer authorized to practice land surveying in accordance with all provisions of Section 8771 of the Business and Profession Code shall be hired as a subcontractor or employed by the Contractor.

3-10.5 Survey Service.
Contractor shall be responsible for: furnishing all surveying and staking, horizontal and vertical, as shown on the plans and in accordance with the specifications; furnishing all staking for sub-grade and base course grades per typical sections; replacing any existing monuments and ties which have been destroyed by construction; identifying, locating and tying out all monuments and ties necessary within the work area; and shall reinstall all disturbed monuments and ties, supplying the Engineer with copies of monument and tie sheets recorded with the County Surveyor in accordance with applicable State law. Monuments shall be approved by the Engineer.

Surveying and staking shall be done by a Registered (licensed) Land Surveyor or Registered Civil Engineer authorized to practice land surveying in accordance with all provisions of Section 8771 of the Business and Professions Code.

Unless otherwise specified, stakes will be set and stationed by the Contractor's surveyor for curbs, headers, sewers, storm drains, structures, rough grade and all other staking necessary for the construction of the work. A corresponding cut or fill to finished grade (or flowline) will be indicated on a grade sheet to be supplied to the Engineer. The Contractor shall dig all holes necessary for line and grade stakes.

3-13 COMPLETION, ACCEPTANCE, AND WARRANTY.

3-13.2 Acceptance. - *Add the following paragraphs:*
The Contractor shall submit written assertion that the work has been completed prior to the Engineer making final inspection. The Engineer will have 48 hours to inspect the work. If the Engineer determines that the work is not complete, written notice will be given.

Until final acceptance of work by the Engineer, the Contractor shall have charge and care thereof from damage caused by the action of the elements or from any other cause, whether arising from the execution or from the non-execution of the work. The Contractor shall rebuild, repair, restore, and make good all injuries or damage to any portion of the work occasioned by any of the above causes before final acceptance and shall bear the expense thereof.

All work which has been rejected shall be remedied or removed and replaced by the Contractor at their expense with work conforming to the plans and specifications. Any defective material or workmanship which may be discovered before final acceptance or within one year from the date of final acceptance shall be immediately corrected by the Contractor at their expense, notwithstanding that it may have been overlooked in previous inspections and estimates. Failure to inspect work at any stage shall not relieve the Contractor from any obligation to perform sound and reliable work as herein described. It is the Contractor's ultimate responsibility to deliver a complete, operational project that complies in all details with these specifications, at the time of final acceptance.

Any omission or failure on the part of the City to discover or notify the Contractor of or to condemn defective work or material at the time of construction shall not be deemed as acceptance, and the Contractor will be required to correct defective work or material prior to final acceptance.

The City will endeavor to locate any errors or defective materials or workmanship and call them to the attention of the Contractor prior to subsequent work being performed. However, the City is under no obligation to do so and shall not be held liable because errors or defective material or workmanship by the Contractor are not discovered prior to subsequent work.

Nothing in this section shall be construed to limit the rights of the City to immediately correct conditions which are unsafe or which pose a public health nuisance. Should said corrections later be found to be caused by defective material and/or workmanship, the Contractor and their surety shall reimburse the City for costs reasonably incurred while attending the situation.

In the event it is necessary for the City to file suit to enforce any liability of the Contractor pursuant to this Section, the City shall be entitled to recover from the Contractor, in addition to all other amounts found due and owing, costs of suit and reasonable expenses and fees including reasonable attorneys' fees incurred by the City in successfully enforcing the Contractor's obligation, all to be taxed as costs and included in any judgment rendered.

3-13.3 Warranty. - *Amend the following:*

Amend the first sentence of the paragraph 3:
"The warranty period for specific items covered under manufacturers' or suppliers' warranties shall commence from the date of the final acceptance, except where longer warranty periods are specified."

Add the following paragraphs:
All start-up and testing shall be complete, approved and accepted before final acceptance, substantial completion, or beneficial occupancy.

When Owner-Furnished equipment (generators) are delivered, unloaded, and accepted by Contractor, the Contractor shall be deemed to have accepted responsibility for protection of the equipment (generators) until installed and tested by the Contractor, and accepted by the City. The Contractor's warranty for the equipment (generators) shall pertain to the extent of storage and installation of the equipment (generators). The City's purchase agreement warranty for the equipment (generators) does not and shall not apply to Contractor's responsibility for retrofit for diesel particulate filters, unloading, handling, security, protection, installation, and placing into operation. Warranty for the diesel particulate filters shall be in accordance with these specifications and shall commence from the date of the final acceptance, except where longer warranty periods are specified.

The warranty provided herein shall not be in lieu of, but shall be in addition to any warranties or other obligations otherwise imposed by the specifications or by law. The remedies provided herein shall not be exclusive and the City shall be entitled to any and all remedies provided by law.

3-14 INSPECTION.

The Contractor shall notify the Engineer at least 24 hours in advance before inspection is required. Whenever the Contractor varies the period during which work is carried on each day, due notice shall be given to the Engineer so that proper inspection may be provided. Varied working hours may be allowed only upon written authorization from the Engineer.

Work financed in whole or in part with funds from another public entity or performed within the jurisdiction of another public entity shall be subject to inspection at all times by authorized representatives of that entity.

The work shall be ready for inspection, whether by City, other public entities or independent testing laboratories, at the scheduled times arranged by the Contractor. If, in the City's sole judgment, the work is not ready and the inspection must be rescheduled, the Contractor shall be notified. The Contractor shall reschedule the inspection and provide the proper 24 hour notification for the rescheduled inspection. Any costs incurred by the City for rescheduled inspections shall be reimbursed prior to the release of Bonds.

In order to allow for inspection, the Contractor shall notify the City's inspector sufficiently in advance of the permanent concealment of any materials or work. The City's inspector shall make the appropriate notifications to other public entities and independent testing laboratories for inspections. All inspections required in the specifications for this project shall be coordinated through the City's inspector.

If any work is concealed or performed without the prior notice specified, the work shall be subject to such tests or exposure as may be necessary to prove to the City, Architect and Engineer, that the materials used and the work performed are in conformity with the drawings and specifications. All labor, tools, materials and equipment necessary for exposing and testing shall be furnished by the Contractor at their expense. The Contractor shall replace at their expense, any materials or work damaged by exposure or testing.

Overtime inspection may be requested by the Contractor. Overtime inspection includes but is not limited to, any hours worked outside of the inspector's normal working hours including weekends and holidays. Such requests shall be on a case-by-case basis as determined by the Engineer. If the Engineer so determines and approves, overtime inspection shall be paid for by the Contractor at the current City billing rate at the time of request or as billed by other public entities or independent testing laboratories. Any costs incurred by the City for overtime inspection shall be reimbursed prior to the release of Bonds.

SECTION 4 - CONTROL OF MATERIALS

4-1 GENERAL. - *Delete and replace with the following:*

Should any work performed or material furnished under the Contract prove defective or not in accordance with the Plans and Specifications and in the opinion of the Engineer such defect is not of sufficient magnitude or importance to make the work dangerous or unusable, or if the removal of such work is impracticable or will create dangerous or undesirable conditions, the Engineer at his discretion shall have the right and authority to retain such work instead of requiring it to be removed and reconstructed, but he shall make such deductions therefore in the payment due the Contractor as may be just and reasonable.

4-1.1 Warranty of Title. No materials, supplies or equipment for the work under this Contract shall be purchased subject to any chattel mortgage or under a conditional sale contract or other agreement by which an interest therein or any part thereof is retained by the seller or supplier. The Contractor warrants clear and good title to all materials supplied and equipment installed and incorporated in the work and agrees, upon completion of all work, to deliver the premises, together with all improvements and appurtenances constructed or placed thereon by him, to the Owner free from any claims, liens, encumbrances or charges, and further agrees that neither he nor any person, firm, or corporation furnishing any material or labor for work covered by the Contract shall have any right to a lien upon the premises or any improvement or appurtenance thereon, provided that this shall not preclude the Contractor from installing metering devices or other equipment of utility companies the title of which is commonly retained by the utility company. Nothing contained in this article, however, shall defeat or impair the right of such persons furnishing materials or labor under any bond given by the Contractor for their protection, or any right under any law permitting such persons to look to funds due the Contractor, which are in the hands of the Owner.

4-1.2 Clayton Act. In submitting a bid to the City, if the bid is accepted the Contractor agrees it will assign to the City all causes of action it may have under Section 4 of the Clayton Act (15 U.S.C. Section 15) or under the Cartwright Act (chapter 2 [commencing with Section 16700] of Part 2 Division 7 of the Business and Professionals Code), arising from purchases of goods, materials, or services by the Bidder for sale to the City pursuant to the bid. Such assignment shall be made and become effective at the time the City tenders final payment to the Bidder.

SECTION 5 – LEGAL RELATIONS AND RESPONSIBILITES

5-1.1 CONTRACTOR'S EQUIPMENT AND FACILITIES.

A noise level limit of 86 dbA at a distance of 15 m (50 feet) shall apply to all construction equipment on or related to the work whether owned by the Contractor or not. The use of excessively loud warning signals shall be avoided, except in those cases required for the protection of personnel.

5-1.2 General.
The enclosed toilets required by this section shall be located within an approved yard, if one is acquired by the Contractor. If a yard is not acquired by the Contractor or the project is not within a City owned property, the toilets must be installed on a trailer and removed from the jobsite each day. At no times shall toilets be stored within the public right of way outside of working hours.

5-3 LABOR. - *Amend the following:*

5-3.1 General. - *Add the following paragraphs:*
Employment of apprentices are required on projects of $30,000 or more. Provisions in Sections 1777.5 of the California Labor Code fixes responsibility of compliance with that section for all apprenticeable occupations with the Contractor. Section 1777.5 provides that the Contractor and every Subcontractor shall submit contract award information to the applicable joint apprenticeship committee. One apprentice hour for every five journeymen hours worked is the minimum State requirement applicable to each apprenticeable trade. Section 1777.7 of said Labor Code provides that the Contractor shall forfeit as a civil penalty the sum of one hundred dollars ($100.00) for each calendar day of noncompliance with provision of said Section 1777.5.

The Contractor will observe all applicable health and safety requirements, including, but not limited to the California and Federal Occupational Safety and Health Acts. The Contractor shall submit for review by the City a Site Specific Health and Safety Plan prior to the commencement of construction activities. This Plan shall meet or exceed the requirements of 29 CFR 1910.120.

5-3.2 Prevailing Wages. - *Add the following paragraphs:*
Contractors are hereby notified that pursuant to Section 1770 of the Labor Code of the State of California, the City Council of the City of Redlands, California, by Resolution No. 2326, has ascertained the general prevailing rate of hourly wages and rates for legal holidays and overtime work in the locality where this work is to be performed, for each craft or type of workman or mechanic needed to execute the Contract which will be awarded to the successful Bidder. The Contractor shall comply with Sections 1770 to 1780 inclusive of the Labor Code and Master Labor Agreement of Southern California.

The Contractor and each of his subcontractors shall pay each of his employees engaged in work on the project under this Contract in full less legally required deductions and also deductions made pursuant to the regulations prescribed under the so-called "Kick- Back Statute" (48 Sta. 948; U.S.C. 875; 40 U.S.C. 276c).

In accordance with Section 1775 of the California Labor code, Contractor shall forfeit to City, as a penalty, a minimum of $40 for each day, or portion thereof, and a maximum of $200 for each day, or portion thereof, for each worker paid, either by Contractor, or any subcontractor, less than the prevailing rates as determined by the Director of the California Department of Industrial Relations for the work.

Contractor further agrees to fully comply with all applicable provisions of the California Labor Code including but not limited to Sections 1771, 1775, 1776, 1777.5, 1813 and 1815. Failure to abide by prevailing wages and laws by Contractor will be enforced.

The Contractor or subcontractor shall, as a penalty, to the State or political subdivision on whose behalf the contract is made or awarded forfeit twenty-five ($25) dollars for each worker employed in the execution of the contract by the respective contractor or subcontractor for each calendar day during which the worker is required or permitted to work more than 8 hours in any calendar day and 40 hours in any calendar work in violation of Labor Code section 1813.

5-3.3 Payroll Records. – *Delete and replace with the following*:
The contractor and subcontractors shall submit electronic certified payroll on a weekly basis to the City of Redlands through LCPtracker. LCPtracker is a web-based labor compliance management system. The Prime Contractor and Subcontractors and lower-tier Subcontractors will receive an email from LCPtracker providing their log-on identification and temporary password. The Contractors will need to follow the instructions in the email to set-up their permanent password and activate their account. Once their account is setup, LCPtracker Inc. provides either computer based or web based training. Training can be accessed via the "Book Now" button located under the "Projects" tab. The prime contractor shall submit their certified payroll, along with any subcontractor who is performing any labor, on a weekly basis. The prime contractor is responsible for all communication with their subcontractors and shall submit their subcontractor's certified payroll as part of their weekly payroll packet. All labor compliance correspondence and submissions will be made through the LCPtracker software.

All certified payroll shall be submitted no later than 7 days from the close of the pay period. The payroll records shall set out accurately and completely the name, social security number, classification and hourly wage rate of each employee, hours worked by employee during the payroll period and a full weekly wages and the actual weekly wages paid to the employee. Such certified payroll records shall be made available at all time for inspection by the City, the Department of Industrial Relations, the Department of Labor or authorized representatives within ten days of request. The contractor and subcontractor shall preserve weekly payroll records for a period of three (3) years from the date of completion of the Contract. In case on noncompliance with said Section 1776 and after a ten-day period following receipt of written notice, the Contractor shall forfeit to the California Department of Industrial Relations one hundred dollars ($100.00) for each calendar day or portion thereof, for each worker in non-compliance, until compliance is effectuated.

In order to meet labor compliance requirements, all contractors will be required to complete eDocuments which are accessed, submitted and approved through LCPtracker. All eDocuments are required to be signed by an owner/officer or authorized signer. The Prime Contractor and each Subcontractor and every lower-tier Subcontractor and any Vendors subject to this provision shall comply with Title 8, Section 16404 of the California Code of Regulations.

A Fringe Benefit Statement shall be submitted with the first payroll and is required for both the prime contractor and any subcontractors. A new Fringe Benefit Statement will be required when general determinations are issued in February and August. Please refer to the DIR website for additional

details. Any weeks where no work was performed must be represented by the submittal of a Statement of Non-Performance covering the 7 day pay period where no hours were worked on the site. Final payroll on the project should state "Final" on the certified payroll, and must be marked as such in the LCPtracker system.

Failure by the Contractor to comply with the aforementioned requirements shall result in withheld progress payments until such time certified payroll documents have been received, reviewed, and accepted by the City. The City reserves the right to seek assistance from the State Department of Industrial Relations in determining the acceptability of certified payroll submittals before release of withheld progress payments. Prior to the release of retention monies, all certified payroll must be submitted on the project and any outstanding issues that may have occurred throughout the project must be resolved.

5-4 INSURANCE. - *Delete Section 5-4.1, Section 5-4.2 and replace with the following:*
Before entering into a Contract, the Bidder to whom the Contract has been awarded shall furnish satisfactory evidence that they have secured all required insurance from a responsible insurance company authorized to do business in California and satisfactory to the City, and such insurance shall be maintained in full force and effect at the Contractor's own expense during the life of the Contract. Contractor shall furnish the City with the customary Certificates of Insurance for all required insurance listed below. General Liability Insurance shall name the City and the Consultant, as an additional insured and shall be primary and non-contributing to any insurance or self-insurance maintained by the City. All liability insurance policies shall bear an endorsement or shall have attached a rider whereby it is provided that, in the event of expiration or proposed cancellation of such policies for any reason whatsoever, the City shall be notified by registered mail, return receipt requested, giving sufficient time before the date thereof to comply with any applicable law or statute, but in no event less than forty five (45) days before expiration or cancellation is effective.

The coverage shall provide the following minimum limits based on the type of work proposed under this Contract. The Contractor shall determine if the proposed work requires Tier 1 or Tier 2 Designated Insurance Requirements shown below.

CONTRACTED OPERATIONS DESIGNATED AS TIER 1		
Air Conditioning (HVAC) Systems (installation)	Electric Light or Power Line Construction	Pipeline Construction
Airport Runways (paving, repaving, etc.)	Elevator Work	Roofing
Blasting Operations	Excavation	Sandblasting
Bridge or Elevated Highway Construction	Fire Suppression Systems (installation)	Sewer and Water Main Construction
Buildings Structural Work (including elevators)	Gas Mains or Connections Construction	Sign Erection (streets)
Building Structure (raising or moving)	Geophysical Exploration	Solar Energy
Cable Installation in Conduits and Conduit Construction (streets)	Grading of Land	Street Cleaning
Caisson or Cofferdam Work	Hazardous Materials Contractors	Street or Road Construction
Dam or Reservoir Construction	Irrigation or Drainage Construction	Tank Construction, Installation, Erection or Repair
Demolition (structures)	Landscape Construction (street or street medians)	Telephone or Cable Line Construction
Drilling	Painting (exterior greater than single story)	Tree Pruning, Dusting, Spraying or Removal

TIER 1 DESIGNATED INSURANCE REQUIREMENTS

a. Commercial General Liability
   - $1 Million Per Occurrence/ $2 Million Aggregate
     - City listed as an Additional Insured on the coverage
     - Coverage is primary and non-contributory
     - If scope of work is within 50 feet of any railroad, endorsement citing inclusion of liability associated with this work is required
     - If any policy forms of endorsements are cited to grant extension of coverage, they must be included with the Certificate of Insurance submission

b. Business Auto Liability
   - $1 Million Combined Single Limit
     - City listed as an Additional Insured on the coverage
     - Must include liability arising from all owned, leased, hired, and non-owned autos
     - If any policy forms of endorsements are cited to grant extension of coverage, they must be included with the Certificate of Insurance submission
   - If Contractor or its subcontractors or suppliers haul hazardous material (including, without limitation, waste), Auto Liability insurance must be applicable to all hazardous waste hauling vehicles, and include MCS 90 and CA9948 Endorsements.

c. Commercial Umbrella/ Excess Liability
   - $5 Million Per Occurrence/ Aggregate
     - City listed as an Additional Insured on the coverage
     - Coverage is primary and non-contributory

- If any policy forms of endorsements are cited to grant extension of coverage, they must be included with the Certificate of Insurance submission

d. Workers Compensation
   - $1 Million Per Occurrence for Bodily Injury by Accident
   - $1 Million Each Employee for Bodily Injury by Disease
   - $1 Million Policy Limit for Bodily Injury by Accident
     - Waiver of Subrogation in favor of City
     - If any policy forms of endorsements are cited to grant extension of coverage, they must be included with the Certificate of Insurance submission

e. Pollution Policy (Hazardous Materials) [If Applicable]
   - Required of Projects that involve Demolition and/or Excavation Activities
   - $1 Million Per Occurrence/ $2 Million Aggregate
   - City listed as an Additional Insured on the coverage

CONTRACTED OPERATIONS DESIGNATED AS TIER 2		
Air Conditioning (HVAC) Systems (service and repair)	Carpentry (building interiors)	Fire Suppression Systems (service and repair)
Alarms and Alarm Systems	Communications Equipment Installation (interior)	Landscape Construction
Building Interior Work (service, repair and non-structural remodeling)	Driveway, Parking Area or Sidewalk (paving or repaving)	Painting (exterior)
Cable Installation in Conduits (buildings)	Fence Erection	All Other Job Types including Vendors

TIER 2 DESIGNATED INSURANCE REQUIREMENTS

a. Commercial General Liability
   - $1 Million Per Occurrence/ $2 Million Aggregate
     - City listed as an Additional Insured on the coverage
     - Coverage is primary and non-contributory
     - If scope of work is within 50 feet of any railroad, endorsement citing inclusion of liability associated with this work is required
     - If any policy forms of endorsements are cited to grant extension of coverage, they must be included with the Certificate of Insurance submission

b. Business Auto Liability
   - $1 Million Combined Single Limit
     - City listed as an Additional Insured on the coverage
     - Must include liability arising from all owned, leased, hired, and non-owned autos
     - If any policy forms of endorsements are cited to grant extension of coverage, they must be included with the Certificate of Insurance submission

- If Contractor or its subcontractors or suppliers haul hazardous material (including, without limitation, waste), Auto Liability insurance must be applicable to all hazardous waste hauling vehicles, and include MCS 90 and CA9948 Endorsements.

c. Workers Compensation
   - $1 Million Per Occurrence for Bodily Injury by Accident
   - $1 Million Each Employee for Bodily Injury by Disease
   - $1 Million Policy Limit for Bodily Injury by Accident
     - Waiver of Subrogation in favor of City
     - If any policy forms of endorsements are cited to grant extension of coverage, they must be included with the Certificate of Insurance submission

d. Pollution Policy (Hazardous Materials) [If Applicable]
   - Required of Projects that involve Demolition and/or Excavation Activities
   - $1 Million Per Occurrence/ $2 Million Aggregate
   - City listed as an Additional Insured on the coverage

Contractor expressly waives all rights to subrogation against the City, its officers, employees and volunteers for losses arising from work performed by Contractor for City by expressly waiving Contractor's immunity for injuries to Contractor's employees and agrees that the obligation to indemnify, defend and hold harmless provided for in this Agreement extend to any claim brought by or on behalf of any employee of Contractor. This waiver is mutually negotiated by the parties. This shall not apply to any damage resulting from the sole negligence of City, its agents and employees. To the extent any of the damages referenced herein were caused by or resulted from the concurrent negligence of City, its agents or employees, the obligations provided herein to indemnify, defend and hold harmless are valid and enforceable only to the extent of the negligence of contractor, its officers, agents and employees.

Subcontractors. The prime contractor shall include all subcontractors as insureds under its policies or shall furnish separate certificates and endorsements from each subcontractor.

The Contractor shall not assign or sublet the contract, in whole or in part, without the written consent of the City, nor shall the contractor assign any monies due to, or to become due to, Contractor hereunder without prior written consent of the City.

The Contractor shall be fully responsible to the City for the acts and omissions of the subcontractor and persons either directly or indirectly employed by the Contractor. Consent to subcontracting part of the work shall, in no way, release the Contractor from responsibility for performance of the work, and Contractor will be held, in all respects, accountable for the same as if no consent had been given. The Contractor shall give personal attention to this work which is sublet. Nothing contained in the contract documents shall create any contractual relation between any subcontractor and the City.

Hold Harmless and Indemnification. Contractor shall indemnify, hold harmless and defend City and its elected officials, agents and employees and the Consultant from and against any and all claims, losses or liability, including attorney's fees, arising from injury or death to persons or damage to property occasioned by any act, omission or failure to act of Contractor, its subcontractors, and any

officers, agents and employees in performing the work required by this Agreement. Contractor's obligations under this provision shall not be limited in any way by any terms of this Agreement, or the insurance limits.

5-4.3 Worker's Compensation Insurance. - *Delete and replace with the following:*

A. Contractor shall have worker's compensation and employer's liability insurance in force throughout the duration of the contract in an amount which meets the statutory requirement with an insurance carrier acceptable to the City. The insurance policy shall include a provision prohibiting cancellation of said policy except upon forty-five (45) days prior written notice to City. Certificates of Insurance shall be delivered to the City at the time of the Contractors' execution of the agreement.

B. Contractor expressly waives all rights to subrogation against the City, its officers, employees and volunteers for losses arising from work performed by Contractor for City by expressly waiving Contractor's immunity for injuries to Contractor's employees and agrees that the obligation to indemnify, defend and hold harmless provided for in this Agreement extend to any claim brought by or on behalf of any employee of Contractor. This waiver is mutually negotiated by the parties. This shall not apply to any damage resulting from the sole negligence of City, its agents and employees. To the extent any of the damages referenced herein were caused by or resulted from the concurrent negligence of City, its agents or employees, the obligations provided herein to indemnify, defend and hold harmless are valid and enforceable only to the extent of the negligence of contractor, its officers, agents and employees.

5-6 PATENT FEES OR ROYALTIES. *Delete and replace with the following:*
The Contractor shall include in its Bid the patent fees or royalties on any patented article or process which may be furnished or used in the Work. The Contractor shall indemnify and hold the City harmless from any legal action that may be brought for infringement of patents. The Contractor's attention is directed to "Notice of Patents, Data, and Copyright Regulations" of the Federal Labor Standards.

The Contractor shall bear all costs arising from the use of patented goods and/or processes used on and/or incorporated into the Work. When use of these goods and/or processes is judged to be an infringement and the use is banned, the Contractor, at its own expense, shall, with concurrence of the Engineer, do one of the following:

A. Secure for the City the right to continue using goods and/or processes by suspension of the injunction or by procuring a license(s);

B. Replace said goods and/or processes with non-infringing goods and/or processes;

C. Modify said goods and/or processes so that they become non-infringing; or

D. Remove said goods and/or processes and refund the sum paid therefore without prejudice to any other rights of the City.

The preceding shall not apply to any goods manufactured to the detailed design of the City contained in the Contract Documents.

5-7 SAFETY.

5-7.1 Work Site Safety.

5-7.1.1 General. - *Amend the following:*

Add the following sentences to paragraph 1:
Should watering be the sole method utilized for roadway dust abatement purposes, the maximum time interval that shall elapse between applications thereof shall be no greater than 3 hours during normal working day, supplemented by an additional application thereof immediately prior to the conclusion of the workday and at such other times as may be required, including evenings, weekends and holidays as required by the Engineer. Should the Contractor be unable to furnish dust abatement as specified, the City may perform or cause to be performed the necessary service, the expense of which will be deducted from the payment due the Contractor.

Add the following paragraphs:
To insure the protection of storm drain inlets, Best Management Practices (BMPs) shall be employed during cleanup and dust control operations. Refer to Section 7-8.6.

Compliance with this section is of extreme importance to the City and its citizens. The City may fine the Contractor $1,000 per incident if there are issues with dust, mud, unused equipment or materials and rubbish within the construction area that result in citizen complaints. A 24 hour notice shall be issued to the Contractor and failure to correct the problems will result in the fine being levied. This fine will be in addition to those fines potentially charged for NPDES violations.

5-8 AIR POLLUTION CONTROL.

Dust control shall be performed in accordance with Subsection 7-8 of the Standard Specifications, South Coast Air Quality Management District (SCAQMD) Rule 403, the general Provisions and the following Provision.

Dust resulting from the Contractor's performance of the work, either inside or outside, the right-of-way shall be controlled by the Contractor. Dust control includes the action necessary to prevent, reduce or control dust within the work area as required to complete the work. The Contractor shall carry out proper and efficient measures to prevent his operations from producing dust in amounts damaging to property or causing a nuisance, or harm to persons living nearby or occupying buildings in the vicinity of the work. The Contractor shall control dust 24 hours a day, seven days a week. The methods to be used for controlling dust in the construction area and along haul roads shall be approved by the Engineer prior to starting any work. The Rule 403 Implementation Handbook published by the SCAQMD, contains a detailed listing of reasonably available dust control measures.

Dust control ordered by the Engineer to be applied on Saturdays, Sundays or holidays will be included in the Contract price for dust control and no additional compensation will be allowed therefore.

All startup and operation testing of the standby generators shall be in accordance with AQMD rules and regulations.

The full compensation for all direct and indirect costs incurred for work performed or materials used to control dust resulting from the Contractor's performance of the work and caused by public traffic, either inside or outside the right-of-way shall be considered as included in the Contract prices paid for the various items of work involved and no additional compensation will be allowed therefore.

5-9 STORAGE OF EQUIPMENT AND MATERIALS.

The Contractor shall be required to provide and maintain as necessary, any additional property required for storage of equipment, materials, etc., to perform work on this project. Should the additional property be located within the city limits of the City of Redlands, the Contractor shall obtain written approval from the City of Redlands Development Services Department and comply with all conditions set therein prior to use. When private property is used for a yard area, the Contractor shall also secure written authorization from the private property owner and supply a copy of such to the City before any monthly progress payment is submitted. Contractor to propose designated areas of the project site, upon approval by the Engineer, suitable for material delivery, storage, and waste collection.

The Contractor shall ensure the construction yard adheres to all local, State and Federal regulations, ordinances, codes and maintained in a neat and orderly manner throughout the duration of the project. The contractor shall include the construction yard in the Erosion Control Plan or SWPPP and shall be inspected and approved prior to use of the yard. If at any time during the project the location of the construction yard changes from the approved site, the City shall be notified prior to relocation for inspection and approval. Should the Contractor fail to comply with these conditions, the Engineer may suspend the work per SSPWC section 6-3 until the condition is corrected.

At the end of the project or as required, the Contractor shall: clean up and remove all trash and debris, including all organic trash and debris; clean up and remove all hazardous and biochemical wastes from the property to the satisfaction of the agency (City, County, State, or Federal) charged with overseeing these items; and provide to the City a written release from the private property owner that they are satisfied with all clean up and removal work.

5-9.1 Storage in Public Streets.

Construction materials and equipment shall not be stored within public streets or right of way without prior approval from the City. In order to seek approval, Contractor shall submit a location map with all equipment or materials identified including size, duration and any BMP's installed and provide at least 7 days for review by the City.

5-10 WATER POLLUTION CONTROL.

The Contractor shall follow the City's guidelines for Storm Water Pollution Prevention in providing storm water pollution control at the project site, including the implementation of approved Erosion/Sediment Control Plans during construction as well as the implementation of approved Water Quality Management Plans.

Construction activities disturbing 1 acre or more of land shall comply with the State Water Resources Control Board's NPDES General Construction Storm Water Permit. A copy of the Notice of Intent (NOI) to include the Waste Discharge Identification (WDID) number shall be submitted as part of the Storm Water Pollution Prevention Plan (SWPPP) to the Engineer for review. Call (909) 782-4130 for NOI/WDID information.

All projects requiring grading shall submit to the City for review and approval an Erosion/Sediment Control Plan and a Grading Plan. Permit(s) will not be issued until plans are approved and may be revoked if work required in these specifications are not complied with.

Construction sites shall be maintained by implementation of BMPs in such manner that pollutants are not discharged from the site to the maximum extent practicable. A few references available to help with selection and implementation of applicable BMPs are:

1. California Storm Water Best Management Practice Handbook, American Public Works Association, March 1993;
2. The Construction Site Best Management Practices Manual, November 2000;
3. Storm Water Pollution Prevention Plan and Water Pollution Control Program Preparation Manual, November 2000;
4. California Regional Water Quality Control Board's San Francisco Bay Region, Guidelines for Construction Projects; and
5. California Regional Water Quality Control Board's San Francisco Bay Region, Erosion and Sediment Control Field Manual, July 1999.

All discharges into the storm drain system are prohibited except for potable water, properly treated discharge, and those discharges specifically approved by the Engineer. The following are some of the prohibited discharges:

1. Discharges that could have an impact on human health or the environment, cause or threaten to cause pollution, contamination, or nuisance;
2. Discharges that exceed any applicable water quality standard contained in a statewide Water Quality Control Plan or local Basin Plan; and
3. Discharges containing hazardous substances equal to or in excess of a reportable quantity listed in Federal regulations 40 CFR, Parts 117 and 302.

Materials that can cause or contribute to pollution or a violation of any applicable water quality standard include, but are not limited to: sediments; solid or liquid chemical spills; wastes from paints, stains, sealants, glues, limes, pesticides or herbicides and wood preservatives or solvents; asbestos fibers, paint flakes or stucco fragments; fuels, oils, lubricants or hydraulic, radiator and battery fluids; fertilizers; vehicle and equipment wash water or concrete wash water; concrete, detergent or floatable wastes; wastes from any engine and equipment steam cleaning or chemical degreasing; and chlorinated potable water line flushings.

Unless exempted or authorized by an NPDES permit, all non-storm water discharges require prior approval by the Engineer or the State Water Resources Control Board with Engineer approval.

During construction, temporary storage of such materials as identified above, must occur in a designated area physically separated from potential storm water runoff, with ultimate disposal in accordance with local, state and federal requirements.

De-watering of contaminated groundwater or discharging contaminated soils via surface erosion is prohibited.

Unless indicated otherwise by the Engineer, all projects, regardless of size, shall submit for review and approval, a Water Quality Management Plan (WQMP). The WQMP shall consist of post construction BMPs which shall remain in effect throughout the life of the facility. Refer to WQMP guidelines.

5-11 TEMPORARY LIGHTS, POWER AND WATER.

Any water drawn from a City fire hydrant shall be via a City owned water meter. Said meter may be obtained from the Municipal Utilities & Engineering Department. Contractor is responsible for payment of a $1200 deposit fee. Said meter shall be returned in a condition like received, less normal wear and tear. All meters are loaned subject to the conditions of the Fire Hydrant Construction Meter Water Service Application. Contractor must provide proposed location of meter and notify Customer Service at (909) 798-7516 each time the meter is relocated during construction. Water reasonably used in connection with the construction contract will be provided at no cost to the Contractor. Water use determined to be wasteful or unreasonable will be charged for at the prevailing rate.

5-12 PROTECTION AND RESTORATION OF EXISTING IMPROVEMENTS.

The Contractor shall relocate, re-establish, repair or replace all existing improvements within the work limits or right-of-way which are not designated for removal (e.g., sprinkler systems, curbs, sidewalks, driveways, fences, walls, signs, utility installations, pavement, structures, etc.) which are damaged or removed as a result of its operations.

Relocations, re-establishments, repairs and replacements shall be at least equal to existing improvements and shall match them in finish and dimension.

All costs to the Contractor for protecting, removing, restoring, relocating, repairing, replacing or re-establishing existing improvements shall be included in the Bid.

The Contractor shall be responsible for the maintenance of the streets and roadways to be used by public and local traffic through and adjacent to the construction zone, from the date of "Notice to Proceed" until the date of acceptance of the completed construction improvements.

Street maintenance shall include filling of potholes, grading of subgrade and base, replacing signs, installing interim pavement striping and markers on the project streets and other side streets within the construction zone. Street maintenance shall also include sweeping and washing of streets,

adjacent and connected to the construction zone on a weekly, or more frequent schedule, to prevent the accumulation of dust, dirt, gravel or other deleterious materials, all as necessary to maintain the construction roadways and adjacent streets in a safe, clean and drivable condition for use by public and local traffic.

Upon request from the City for information pertaining to a claim against the contractor, contractor shall provide a written/email response, including all requested information, within 14 calendar days of City's request. If a response with all requested information is not provided to the City within 14 calendar days, a penalty of $500 per calendar day will be assessed to the Contractor by the City.

5-13 PUBLIC CONVENIENCE AND SAFETY.

5-13.1 General.

The Contractor may be allowed to close the roadway, or a portion thereof, to traffic during normal work hours upon approval from the Engineer. During any closure, the Contractor shall allow access for residents, schools, trash service trucks, churches and businesses within the affected portion of roadway, except as required for construction for a reasonable period of time. The Contractor shall notify residents as noted within Section 5-18.

The Contractor shall provide and install barricades, delineators, warning devices and construction signs in accordance with the Work Area Traffic Control Handbook (WATCH) prepared by the Southern California Chapter of the American Public Works Association. During adverse weather or unusual traffic or working conditions additional devices shall be placed as directed by the engineer. All traffic signs and devices shall conform to the current State of California, Department of Transportation (CALTRANS), "Manual of Warning Signs, Lights, and Devices for Use in Performance of Work upon Highways", unless otherwise approved by the Engineer.

Fences, barriers, lights and signs shall be furnished, erected and maintained as necessary to give an adequate warning to the public at all times that the work is under construction and of dangerous conditions to be encountered as a result thereof, and warning and directional signs shall also be erected and maintained as may be required by the City. Should the Contractor fail to furnish a sufficient number of traffic and/or pedestrian safety devices within three (3) hours after being notified, the Owner will place such necessary items and the Contractor shall be liable to the Owner for providing such devices in accordance with the following provisions:

1. For placing of barricades - $15.00 per barricade for each day or part thereof.

   For flashers - $15.00 per flasher for each day or part thereof.

   For traffic cones - $7.50 per cone for each day or part thereof.

2. In the event that the services of the Owner are required outside the normal working hours and/or days or items not noted above are furnished by the City, all costs incurred by the City shall be the responsibility of the Contractor.

The Contractor shall relocate, preserve and maintain the visibility of all signs within the project limits which affect the flow of traffic, as directed by the engineer. Any signs that are missing or found damaged shall be replaced immediately by the Contractor at his expense.

The Contractor shall provide and maintain Class II barricades along excavation edges parallel to the flow of traffic at a spacing of twenty-five feet (25'). Class II barricades mounted with flashers shall be installed around work areas in parkways. Class II barricades shall have alternating black and reflectorized white (or yellow) stripes at an angle of 45 degrees. The stripe with shall be four to six inches.

During paving operations barricades may be supplemented with minimum size eighteen-inch (18") high traffic cones and delineators such that spacing between barricades and/or cones or delineators is no greater than twenty-five feet (25"). At all access points such as intersecting streets, alleys and driveways, barricades and/or cones shall be provided at five-foot (5') intervals so as to prevent vehicular access to the paving area. Where access from an intersecting street is prohibited, a "Road Closed" sign shall be provided. "No Left Turn" sign shall be provided wherever required by the Engineer.

Clearances from traffic lanes shall be 5 feet to the edge of any excavation and 2 feet to the face of any curb, pole, barricade, delineator or other vertical obstruction.

A 4 foot wide pedestrian walkway shall be maintained in the parkway area on each side of all streets, unless otherwise authorized by the Engineer. The minimum clearance from: the edge of pedestrian walkways to any traffic lane shall be 5 feet; the edge of pedestrian walkways to any work zone shall be 3 feet; and the surface of pedestrian walkways to any overhead obstruction shall be 7 feet.

The Contractor shall, at the end of each work day, have backfilled, compacted and placed a temporary drivable roadway surface on all work areas within traveled roadways prior to leaving the job site. Failure to comply to the satisfaction of the Engineer shall result in immediate correction by City forces, and all costs shall be borne by the Contractor.

Traffic control devices shall be marked with the Contractor’s name as appropriate. At no time shall any traffic control devices marked with companies or agencies other than the Contractor or subcontractors, be utilized within the work area.

All said traffic controls and safety devices shall be maintained in clean condition, with any and all graffiti removed by the end of workday on which the graffiti was first reported to the Contractor.

If the traffic control devices are deemed unacceptable by the Engineer due to being damaged, dirty, or marked incorrectly, the Contractor shall replace the traffic control devices immediately. Should the Contractor fail to furnish traffic control devices within three (3) hours after being notified, the Owner will place such necessary items and the Contractor shall be liable to the Owner for providing such devices in accordance with the provisions above.

5-13.1.1 Vehicular Access.

At such times as driveways are inaccessible due to the Contractor's work they shall be blocked by two (2) Class II barricades or one (1) Class II barricades and two (2) delineators. Driveways that are ramped or planked for temporary access shall be provided with a delineator at each side.

5-13.1.2 Signage. The Contractor shall furnish, erect and maintain all construction traffic signage as required and specified.

All construction traffic signage shall be in place prior to commencing any work, placed as needed during construction, moved as necessary and removed only upon completion of all work.

All construction traffic signage and controls shall comply with the State of California Manual of Traffic Controls, Warning Signs, Lights and Devices for use in Performance of Work Upon Highways. All construction traffic signage used in the performance of the work shall be a minimum of the encapsulated lens (high intensity) type. All traffic controls and safety devices, equipment and materials, including but not limited to cones, channelizers, delineators, flashing warning lights, barricades, high level warning devices, telescoping flag trees, flags, signs, markers, portable barriers, flashing arrow signs, changeable message signs, markings and flagging equipment shall be provided and maintained in like new condition.

When a Traffic Signal is constructed as a part of the project, the Contractor shall place and maintain for one calendar month, a message board for each approach leg to a new traffic signal. The message board shall read “CAUTION - NEW TRAFFIC SIGNAL”. The one month period shall begin from the day of activation. This requirement may be lessened or waived, on a case-by-case basis, by the Engineer.

The Contractor shall furnish and properly install, construct, erect, use and continuously inspect and maintain, twenty-four (24) hours per day, seven (7) days per week, including holidays, all said devices, equipment and materials and all temporary and permanent pedestrian and driving surfaces as necessary to provide for the safety and convenience of, and to properly warn, guide, control, regulate, channelize and protect the vehicular traffic, pedestrian traffic, project workers, and the public throughout the entire limits of the work activity and beyond said limits as necessary to include areas affecting or affected by the work, from the date of notice to proceed to the completion and acceptance of the work. Any corrective work required to be performed by City forces shall be charged to the Contractor and paid in full before release of any bonds on the project.

All traffic cones shall be no less than 28 inches in height, except that shorter cones, 12 inches minimum height, may be permitted during striping maintenance operations where the only function of the cone is to separate traffic from the wet paint. All barricades used to delineate traffic at night or placed in or adjacent to the traveled roadway at night, shall be equipped with flashing warning lights.

Channelizers shall be required when lane restrictions, detours or other work conditions need to be maintained for periods longer than normal work hours. Channelizers shall be surface-mounted type and shall be furnished, placed and maintained at the locations shown on the plans or as approved by the Engineer and shall conform to these specifications. Channelizers shall be, at the

Contractor's option, one of the following types, or approved equal: (1) Safe-Hit SH236SMA; (2) Repo "The Replaceable Post"; or (3) Carsonite, "Super Duck" SDF-436.SDF-436.

5-13.2 Traffic Control Plan

The Contractor shall provide a Traffic Control Plan to the agency for approval prior to the scheduled commencement of work. Comments and corrections shall be returned to the Contractor within five (5) working days.

The Contractor shall be required to maintain one lane in each direction when working on the roadway. Access to schools, businesses, etc. shall be maintained as necessary for their operations. If closures are authorized by the Engineer, all detour signage shall be installed prior to closure of specified portion of roadway(s), and shall be maintained during closure.
The Contractor shall make provision to allow pedestrians full access across work areas at existing crosswalks, while working within those areas.

Traffic controls, including but not limited to vehicular and pedestrian traffic controls, maintenance of vehicular and pedestrian access, detours, and street closures shall be in accordance with Subsection 7-1, of the current edition of the "Standard Specifications for Public Works Construction," including all its subsequent amendments, and the current edition of the "Work Area Traffic Control Handbook."

Traffic control and the Traffic Control Plan shall conform to the following:

a. All major streets shall remain open to through-traffic at all times, residential street will be closed to traffic only as long as it takes for material application and drying time.

b. The Traffic Control Plan shall indicate the traffic control requirements for the different types of work to be performed. The Contractor shall be responsible for the preparation of Plans as necessary for specific items of work. These Plans shall be approved by the City's Engineer.

c. All traffic controls and safety devices, equipment and materials, including but not limited to cones, delineators, flashing warning lights, barricades, high level warning devices (flag trees), flags, signs, markers, portable barriers, flashing arrow signs, markings, and flagging equipment shall be provided and maintained in "like new" condition.

d. The Contractor shall furnish and properly install, construct, erect, use, and continuously inspect and maintain, twenty-four (24) hours per day, seven (7) days per week, all said devices, equipment and materials and all temporary and permanent pedestrian and driving surfaces as necessary to provide for the safety and convenience of, and to properly warn, guide, control, regulate, channelize and protect the vehicular traffic, pedestrian traffic, project workers, and the public throughout the entire limits of the work activity and beyond said limits as necessary to include area affecting

or affected by the work, from the start of work to the completion of the work.

In the event the slurry and cape seal ravels, a "loose gravel" (C6) sign shall be placed to adequately warn the public.

e. High-level warning devices (flag trees) are required at all times for any work being performed within the roadway unless otherwise specifically authorized by the City's Engineer.

f. All barricades shall be equipped with flashing warning lights, and all traffic cones shall be no less than twenty-eight inches (28") in height, except that shorter cones, twelve inches (12") high or higher, may be used during striping maintenance operations where the only function of the cones is to protect the wet paint from the traffic.

g. Type III barricades, no less than six feet (6') in length and equipped with two (2) Type "N" markers each and two (2) flashing warning lights each, shall be used to close streets, except as otherwise specifically authorized in advance by the City's Engineer for minor maintenance work of no more than one (1) working days duration on weekdays, or on holidays only, and between 8:00 a.m. and 3:30 p.m. only. Said barricades shall be placed across the full roadway at each point of closure with the distance between barricades or between barricades and curbs, not exceeding three feet (3'), except that one (1) eleven-foot (11')-wide gap between barricades shall be provided at the center of the street. Barricades to the right of the street's center, facing the inbound vehicular traffic, shall also be equipped with one (1) Type C2 "Road Closed" sign each or one (1) Type C3A "Road Closed to Thru Traffic" sign each.

h. Except for residential streets, as otherwise directed and/or authorized by the City's Engineer, two-way vehicular traffic shall be maintained at all times within two (2) eleven foot (11')-wide lanes on streets, having an effective roadway width of forty-four feet (44') or more with restricted parking, and other streets of lesser widths may be reduced to one (1) twelve-foot (12') wide lane with work activity being limited to one side at a time, and with one-way vehicular traffic being maintained at all times by properly trained and experienced flaggers.

No reduction of the traveled way width shall be permitted on any City street before 8:00 a.m. nor after 3:30 p.m., on weekends or holidays, or when active work is not being done, unless prior authorization to do so is granted by the City's Engineer.

Arrow boards shall be required for all lane closures on major streets.

i. Properly trained and experienced flaggers shall be provided to traffic when said traffic is to be interrupted, when two-way traffic is to be reduced to one-way traffic, and at such other times as is necessary to safely pass the traffic through or around the work area, and when so directed by the City's Engineer.

j. Vehicular access to occupied residential property may be restricted on weekdays other than holidays between the hours of 8:00 a.m. to 3:30 p.m. while essential work activity is taking place, with specific prior written approval from the City's Engineer, providing the Contractor gives the owner and/or resident at least forty-eight (48)-hour advance written and oral notice. See Part 2, "Notification of Residents," herein.

Convenient and safe pedestrian access to occupied residential property shall be maintained at all times. Access to mailboxes must be maintained at all time, such that the postal delivery service is not interrupted.

Access to vacant and unused property may be restricted at the Engineer's discretion. Both vehicular and pedestrian access shall be maintained at all times to all other property except as otherwise specifically authorized in writing by the City's Engineer.

k. Any traffic control and safety devices and equipment being used which becomes damaged, destroyed, faded, soiled, misplaced, worn out, inoperative, lost, or stolen shall be promptly repaired refurbished and/or replaced, and any traffic control and safety devices and equipment being used which are displaced or not in an upright position from any cause, shall be promptly returned or restored to their proper position.

l. An unobstructed view of all signs and warning devices including but not limited to stop signs, stop ahead signs, street names signs, and other regulatory, warning and construction signs, markers, and warning devices shall be maintained at all times. No trucks or other equipment or materials shall be stopped, parked, or otherwise placed so as to obscure said signs, markers, and devices from the view of vehicular and/or pedestrian traffic to which it applies.

m. When entering or leaving roadways carrying public traffic, the Contractor's equipment, whether empty or loaded, shall yield to said public traffic at all times, except where the traffic is being controlled by police officers, fire officers, properly trained and experienced flaggers, or at traffic signalized intersections.

n. Stockpiling and/or storage of materials on any public right-of-way or parking areas will not be allowed without specific permission of the Engineer. Materials spilled along or on said right-of-way or parking areas

shall be removed completely and promptly. All stockpile and/or storage areas shall be kept in a safe, neat, clean, and orderly fashion, and shall be restored to equal or better than original condition upon completion of the work.

o. Where vehicular access to abutting property must be restricted, the work shall be so selected, arranged, and scheduled that the person(s) requiring access to said abutting property and/or residents along said streets affected will be able to park within a reasonable distance of not more than five hundred feet (500') from their homes and/or destination. Residents must be supplied written notice of such restrictions a minimum of 48 hours in advance.

p. When work has been completed on a particular street or has been suspended or rescheduled, and said street is to be opened to vehicular traffic, all equipment, "NO PARKING" signs, other obstructions, and unnecessary traffic control devices and equipment shall be promptly removed from that street except as otherwise authorized or directed by the City's Engineer.

q. Should the Contractor be neglectful, negligent, or refuse, fail, or otherwise be unavailable to promptly, satisfactorily, and fully comply with the provisions specified and referred to hereinabove, the City reserves the right to correct and/or mitigate any situation, which in the sole opinion of the City's Engineer constitutes a serious deficiency and/or serious case of noncompliance, by any means at its disposal at the Contractor's and/or permittee's expense, and will deduct the cost therefore from the Contractor's progress and/or final payment. Such corrective action taken by the City shall not reduce or abrogate the Contractor's legal obligations and liability for proper traffic control and safety measures, and shall not serve to transfer said obligations and liabilities from the Contractor to the City or the City's agents.

r. Violations of any of the above Provisions and/or Provisions of the referenced publications, unless promptly and completely corrected to the satisfaction of the City's Engineer, shall at the sole discretion of the City, be grounds for termination of the Contract, or shut down or partial shutdown of the work, without compensation to the Contractor and/or permittee, or liability to the City, all as prescribed by Contractual obligation or State law, whichever is applicable.

Full compensation for furnishing all labor, materials, tools, equipment, flaggers, lights, channelizers (surface mounted), temporary striping, barricades, portable flashing lights, flashing arrow signs, traffic control and detour plan, and incidentals required to comply with the provisions specified and referred to herein above, to provide all required traffic and pedestrian control for the duration of this contract, all as shown and as specified, shall be paid as specified in Section 01200 of the General Requirements and no other compensation shall be made therefore.

5-13.3 Edison Energized Conductors. The Contractor hereby promises and agrees that in the performance of the Work, he will employ and utilize only qualified persons, as hereinafter defined, to work in proximity to Edison's secondary, primary and transmission facilities. The term "qualified person" is defined as follows:

"Qualified Person". A person by reason of experience or instruction is familiar with the operation to be performed and hazards involved.

Contractor further promises and agrees that the provisions of this paragraph shall be and are binding upon any Subcontractor or Subcontractors that may be retained by it, and that the Contractor shall take such steps as are necessary to insure compliance by said Subcontractor or Subcontractors with the requirements of this paragraph.

5-14 CONTRACTOR'S RESPONSIBILITY FOR DAMAGE.

5-14.1 Responsibility for Damage. The Contractor agrees to and does hereby indemnify, defend and hold harmless the City, its elected officials and the Consultant and their officers, agents and employees from every claim or demand made, and every liability, loss, damage, or expense of any nature whatsoever, including attorney's fees and costs, which may be incurred by reason of:

(a) Liability for damages for (1) death or bodily injury to persons, (2) injury to loss or theft of property, (3) any other loss, damage or expense arising under either (1) or (2) above, sustained by the Contractor or any person, firm or corporation employed by the contractor upon or in connection with the work called for in this agreement, except for the liability resulting from the sole negligence or willful misconduct of the City, its elected officials and their officers, employees and agents who are directly employed by the City and the Consultant; and

(b) any injury to or death of persons or damage to property caused by any fault, neglect, default or omission of the Contractor, or any person, firm or corporation employed by the Contractor, either directly or by independent contract, including all damages due to loss or theft, sustained by any person, firm or corporation, including the City, arising out of, or in any way connected with the work covered by this agreement, whether said injury or damage occurs either on or off City property, provided that any of the foregoing (1) is attributable to personal injury, bodily injury, sickness, disease or death, or to injury to or destruction of tangible property (other than the work itself), including the loss of use resulting there from, and (2) is caused in whole or in part by any act or omission of the Contractor, any subcontractor, any supplier, anyone directly or indirectly employed by any of them or anyone for whose act or omissions any of them may be liable, regardless of whether or not caused in part by any act or omission (active, passive, or comparative negligence included, excepting the active negligence of the District) of a party indemnified hereunder.

(c) The Contractor, at its own expense, cost, and risk shall defend any and all actions, suits or other proceedings that may be brought or instituted against the City, its elected officials, officers, agents and employees and the Consultant, against any such claim, demand or liability, and shall pay or satisfy any judgment that may be rendered against the City, its

elected officials, officers, agents or employees, in any such action, suit or other proceedings as a result thereof.

5-15 NO PERSONAL LIABILITY. Neither the City Council, the Engineer, the Consultant, nor any other officer or authorized assistant or agent shall be personally responsible for any liability arising under the contract.

5-16 CONTRACTOR'S RESPONSIBILITY FOR WORK. Except as provided above, until the formal acceptance of the Work by the City, the Contractor shall have the charge and care thereof and shall bear the risk of injury or damage to any part thereof by the action of the elements or from any other cause, whether arising from the execution or from the non-execution of the Work. The Contractor shall rebuild, repair, restore, and make good all injuries or damages to any portion of the work occasioned by any of the above causes before final acceptance and shall bear the expense thereof, except such injuries or damages occasioned by act of the federal government or the public enemy.

The City of Redlands shall not be held responsible for the care or protection of any material or parts of the work prior to final acceptance, except as expressly provided in these specifications.

The City shall not be responsible for security of the Contractors equipment or materials at the site. The City will not be responsible for theft or damage to any property or materials of the Contractor. Security for Contractor’s property shall be the responsibility of the Contractor.

5-17 WARRANTY OF WORK. The Contractor shall guarantee the Work against defective materials or workmanship for a period of (1) year from the date of completion date specified in the Notice of Completion, except where longer warranty periods are specifically stated. As specified in Section 2-4 in the GENERAL CONDITIONS, the Performance Bond shall remain in full force and effect during the warranty period.

All work which has been rejected, shall be remedied, or removed and replaced, by the Contractor at his own expense, with work conforming to the Plans and Specifications. Any defective material or workmanship which may be discovered before final acceptance or within (1) one year from the completion date specified in the Notice of Completion shall be corrected immediately by the Contractor at his own expense notwithstanding that it may have been overlooked in previous inspections and estimates. Failure to inspect work at any stage shall not relieve the Contractor from any obligation to perform sound and reliable work as herein described. It is the Contractor's ultimate responsibility to deliver at the time of final acceptance a complete project that complies in all details with these Contract Documents. All items shall be ready to operate.

Any omission or failure on the part of the Owner to discover or notify the Contractor of or to condemn defective work or material at the time of construction shall not be deemed an acceptance, and the Contractor will be required to correct defective work or material prior to final acceptance.

The Owner will endeavor to locate any errors or defective materials or workmanship and call them to the attention of the Contractor prior to subsequent work being performed. However, the Owner is

under no obligation to do so and shall not be held liable because errors or defective material or workmanship by the Contractor are not discovered prior to subsequent work.

During the (1) one year warranty period, should the Contractor fail to remedy defective material and/or workmanship, or to make replacements within five (5) days after written notice by the Owner, it is agreed that the Owner may make such repairs and replacement and the actual cost of the required labor and materials shall be chargeable to and payable by the Contractor or his Surety.

Nothing in this section shall be construed to limit the rights of the Owner to immediately correct conditions which may be unsafe or which may pose a public health nuisance. Should said conditions later be found to be caused by defective material and/or workmanship, the Contractor and his Surety shall reimburse the Owner for costs reasonably incurred while attending the situation.

In the event it is necessary for the Owner to file suit to enforce any liability of the Contractor pursuant to this sections WARRANTY OF WORK, the Owner shall be entitled to recover from the Contractor, in addition to all other amounts found due and owing, costs of suit and reasonable expenses and fees, including reasonable attorneys' fees, incurred by the Owner in successfully enforcing the Contractor's obligations, all to be taxed as costs and included in any judgment rendered.

The warranty provided herein shall not be in lieu of, but shall be in addition to any warranties or other obligations otherwise imposed by the Contract Document or by law. The remedies provided herein shall not be exclusive and the Owner shall be entitled to any and all remedies provided by law.

5-18 NOTIFICATION OF RESIDENTS/BUSINESSES. The Contractor shall notify all residents, firms, institutions, agencies, and utility companies which may be affected by the work. Notification shall be by hand delivery of an approved notice within the project limits approved by the City. The notification process shall consist of two notifications, one prior to the start of construction for all properties within the project area and a second notification at least seven days in advance of any activity which may impact each specific property. In the event of any work within the downtown area, the distribution of the second notification shall be at least fourteen days in advance of any activity. Activities impacting said properties and, therefore, requiring the above said notices include the following: the work itself; closure or partial closure of the street; and disallowance of street parking and disallowance of vehicular ingress to or egress from the property.

Said firms, institutions, agencies, and utility companies which must be notified of proposed work shall include, but are not limited to the following: public schools, private schools, day care centers, postal service, hospitals, governmental services, police department, fire department, ambulance services, Omnitrans, solid waste collection, and City street sweeping.

The proposed notice shall be submitted to the Engineer at least seven calendar days prior to the date of distribution for review and approval. The submittal shall also include a map identifying the limits of the work and proposed limits of distribution. The printed notices shall contain a general description of the work to be done, the name of the street with limits, the day and date of the work and the name and telephone number of the Contractor. The notice shall also include a statement that there will be no disruption of trash collection schedules and that trash should be set out by 6:00 a.m. on the scheduled day of pickup. If on-street parking will be affected the notice shall include a statement that

no on-street parking will be allowed between the hours of 7:00 a.m. and 5:00 p.m. on the day of work, and a statement that it will be necessary to tow away parked vehicles at the owner's expense per California Vehicle Code CVC 22651L and CVC 22654D.

The Contractor will provide City with the dates and addresses of when project notifications are delivered to affected properties. City will verify the notification process is completed in compliance with the requirements of the specifications. Work will commence when City approves Contractor's compliance with the requirements set forth in the specifications.

If on-street parking is affected, the Contractor shall also post pre-approved "NO PARKING-TOW WAY" signs on 1 x 2 wood stakes or barricades at one hundred foot (100') maximum spacing along the affected areas of the street, 48 hours prior to the start of the work. The "NO PARKING-TOW AWAY" signs shall contain the day, date, and hours that parking will be prohibited on that particular street and a statement that parked vehicles will be towed away at owner's expense per California Vehicle Code CVC 22651L and CVC 22654D. The Contractor shall maintain said signs throughout the day of work, and shall start the removal of said signs by 4:00 p.m. and complete the removal by 6:00 p.m. on said day of work or as otherwise directed by the Engineer.

The Contractor shall document the day, date, and time the signs are installed because the no parking restriction cannot be enforced until the signs have been in place 24 hours. Posting of signs on trees, utility poles, light standards and other existing parkway improvement is strictly forbidden.

In the event of street resurfacing operations, the notices to residents shall contain a statement that the street to be resurfaced will be closed to vehicular traffic, and the suggestion that if they require the use of their vehicles on the day of the resurfacing work, they should consider parking their vehicle on a nearby street which is not scheduled for a resurfacing application.

In the event scheduled work is delayed, the Contractor shall immediately remove all "NO PARKING" signs. The contractor must notify all previously notified, in person and with printed notices, that the work will be rescheduled and that they will be re-notified 48 hours in advance. The Contractor shall have an adequate supply of approved notifications for distribution to residents.

Full compensation for conforming to these requirements shall be considered as included in the various Contract items of work involved, and no additional compensation will be allowed therefore.

Failure to comply with this section shall result in a penalty assessment imposed of up to $10,000 per violation at the City's discretion.

SECTION 6 – PROSECUTION AND PROGRESS OF THE WORK

6-1 CONSTRUCTION SCHEDULE AND COMMENCEMENT OF WORK. - *Add the following paragraph:*
Contractor shall notify Underground Service Alert (USA) at 1 (800) 227-2600, two working days prior to starting work, and must submit verification number to the City prior to starting work.

6-1.2 Commencement of the Work. - *Amend the second sentence as follows:*

"The work shall start within 10 days thereafter, and be diligently prosecuted to completion within the Contract Time."

6-3 TIME OF COMPLETION.

6-4.1 General. - *Add the following paragraphs:*
If saturated soil is encountered during construction due to leaks in an existing utility, contractor shall remove saturated material and replace with a suitable backfill material until adequate compaction can be attained by verification from the City's Geotechnical Engineer.

Prior to any removal of saturated material, contractor shall discuss the methods of remediation with the City's representative. Approval from the City, or the City's representative, shall be obtained for any amount of saturated material removal in which the contractor anticipates to be compensated for, if approval is not obtained all costs shall be borne by the contractor.

Up to a 14 day delay in paving operations may be requested after all leaks have been resolved to provide time for excess moisture to dissipate, at no additional cost to the city, in lieu of removing and replacing the saturated soil. A no cost change order will be prepared to provide the contractor with additional contract time if such delay is requested by the City.

6-9 LIQUIDATED DAMAGES. The value of liquidated damages noted in this section is amended to five hundred dollars ($500) per working day.

6-10 NOTICE AND SERVICE THEREOF. Any notice required or given by one party to the other under the Contract shall be in writing and shall be dated and signed by the party giving such notice or by duly authorized representative of such party. Any such notice shall not be effective for any purpose whatever unless served in the following manner:

Notice shall be given to the Contractor by personal delivery thereof to said Contractor or to his authorized representative at the project site, or by deposing the same in the United States Mail enclosed in a sealed envelope addressed to said Contractor at the address established for the conduct of work under this Contract, certified and with postage prepaid.

Notice shall be given to the Surety, or any other person, by personal delivery to said Surety or other person, or by depositing the same in the United States Mail, enclosed in a sealed envelope addressed to such Surety or persons at the address of said Surety or persons last communicated by him to the party giving the notice, certified and with postage prepaid.

Notice shall be given to the Owner by personal delivery thereof or by depositing the same in the United States Mail enclosed in a sealed envelope, certified and with postage prepaid. The address of record for the owner is:

City of Redlands
Municipal Utilities & Engineering Department
P.O. Box 3005
35 Cajon Street, Suite 15A

Redlands, CA 92373

6-11 PUBLIC RECORDS ACT. All documents, Plans, specifications and all other information relating to the conduct of the City's business, including information submitted by the Contractor, shall become the exclusive property of the City and except as provided by law shall be deemed public records. Said information shall be subject to the provisions of the California Public Records Act (Government Code Sections 6250 et seq.).

Under no circumstances will the City be responsible or liable to the Contractor, submitter or any other party for the disclosure of any records or information submitted to the City, regardless of whether such records or information are labeled "Trade Secret", "Confidential", or "Proprietary" (or words to similar effect) and regardless of whether the disclosure is required by law or a court order or occurs through inadvertence, mistake, or negligence on the part of the City or its officers, employees, and/or Contractors.

The City will not advise as to the nature or content of documents entitled to protection from disclosure under the California Public Records Act, including interpretations of the Act or the definition of "Trade Secret". The submitting party shall be solely responsible for all determinations made under the Act, and where appropriate for clearly and prominently marking each and every page or sheet of information with "Trade Secret", "Confidential", or "Proprietary". Each submitting party is advised to contact its own legal counsel concerning the California Public Records Act and its applicability to the submitting party's own circumstances.

In the event of litigation concerning the disclosure of any information submitted by the submitting party, the City's sole involvement will be as a stakeholder, retaining the information until otherwise ordered by a court. The submitting party, at its sole expense and risk, shall be responsible for any and all fees and costs for prosecuting or defending any action concerning the information, and shall indemnify and hold the City harmless from all costs and expenses including attorneys' fees, in connection with such action.

SECTION 7 - MEASUREMENT AND PAYMENT

7-3 PAYMENT.

7-3.2 Partial and Final Payment. - *Delete and replace with the following:*
The closure date for the purpose of making monthly progress payments shall be assigned by the Engineer during the pre-construction meeting. Payment, less deductions, unearned work and retention, will be made within 30 days of the closure date. If a dispute exists between the City and the Contractor regarding an item included in the Contractor's Monthly Progress Payment Request, progress payments will be withheld until said dispute is resolved, in which case longer period of time will be required to make such payment. No such payment shall be required to be made, when in the judgment of the Engineer, the total value of the work since the last estimate amounts to less than $500. If, in the opinion of the Engineer, work is not progressing according to the approved schedule, payments may be withheld until the Contractor returns to the approved schedule.

Deductions will be made for: (1) amounts due the Owner for equipment or material furnished or services rendered; (2) amounts due the Owner under the terms of the Contract; (3) amounts of any claims of lien filed with the Owner; (4) accrued amounts of liquidated damages; (5) amounts required to be deducted by Federal, State or local governmental authorities. From the balance thus determined will be deducted the amounts of all previous payments, and the remainder shall constitute the monthly payment due the Contractor.

A retention of five percent (5%) will be withheld from each and every progress payment to the Contractor. This percentage will remain constant throughout the duration of the Contract. The City shall make a progress payment within thirty (30) days after receipt of an undisputed and properly submitted payment request from Contractor pursuant to Public Contract Code section 20104.50.

After completion of the work to the satisfaction of the Engineer, the Engineer shall make a final estimate of the amount of work done. The City shall pay the entire sum so found to be due after deducting there from all previous payments and all amounts to be retained under the provisions of the Contract. All prior partial estimates and payments shall be subject to correction in the final estimate and payment. The final payment shall not be due and payable until the expiration of thirty-five (35) days from and after the recordation of the Notice of Completion filed by the City.

As provided by paragraph 22300 of the California Public Contract Code, the Contractor may substitute securities for any monies withheld by the City to ensure performance under the Contract. Substitute securities shall be deposited in a financial institution in a form acceptable to the City of Redlands. The financial institution shall be located within the City limits of the City of Redlands. The Escrow Agreement to be used is set forth in Public Contract Code section 22300.

7-3.3 Delivered Materials. - *Delete and replace with the following:*
No payment will be made for materials or equipment delivered but not yet incorporated in the work.

7-4.2.6 Extras. Without invalidating the Contract, the City may order extra work or make changes by altering, adding or deducting from the work, the Contract sum being adjusted accordingly and the consent of the Surety being first obtained where necessary or desirable. All the Work of the kind bid upon shall be paid for at the price stipulated on the proposal, and no claims for any extra work or material shall be allowed unless the work is ordered in writing by the engineer and the price is stated in such order.

7-4.2.7 Claims for Extra Costs. No claim for extra work or cost shall be allowed unless the same was done in pursuance of a written order by the Engineer, as aforesaid, and the claim presented with the first estimate after the changed or extra work is done. When work is performed under the terms of the General Conditions, the Contractor shall furnish satisfactory bills, payrolls, and vouchers covering all items of cost and when requested by the City, give the City access to accounts relating thereto.

After completion of the work to the satisfaction of the Engineer, the Engineer shall make a final estimate of the amount of work done. The City shall pay the entire sum so found to be due after deducting there from all previous payments and all amounts to be retained under the provisions of the Contract. All prior partial estimates and payments shall be subject to correction in the final estimate

and payment. The final payment shall not be due and payable until the expiration of the thirty-five (35) days from and after the recordation of the Notice of Completion filed by the City.

SECTION 8 - FACILITIES FOR AGENCY PERSONNEL

This section is deleted in its entirety.

SECTION 9 - ASSIGNMENT OF UNFAIR BUSINESS PRACTICES CLAIMS

9-1. In entering into a public works contract or a subcontract to supply goods, services, or materials pursuant to a public works contract, the Contractor or subcontractor offers and agrees to assign to the City all rights, title and interest and to all causes of action it may have under Section 4 of the Clayton Act (15 U.S.C. Sec. 15) or under the Cartwright Act (Chapter 2, commencing with section 16700 of part 2 of division 7 of the Business and Professions Code), arising from the purchase of goods, services, or materials pursuant to this public works agreement. This assignment shall be made and become effective at the time the City tenders final payment to the Contractor, without further acknowledgment by the Parties.

SECTION 10 - TRENCHING AND EXCAVATION

10-1. If this contract involves digging trenches or other excavations that extend deeper than (4) feet below the surface, the following shall be done pursuant to California Public Contract Code Section 7104:

A. That the Contractor shall promptly and before the following conditions are disturbed, notify the City in writing, of any:

(1) Material that the Contractor believes may be material that is hazardous waste, as defined in Section 25117 of the Health and Safety Code, that is required to be removed to a Class I, Class II or Class III disposal site in accordance with provisions of existing law.

(2) Subsurface or latent physical conditions differing from those indicated.

(3) Unknown physical conditions at the site of any unusual nature, different materially from those ordinarily encountered and generally recognized as inherent in work of the character provided for in the contract.

B. That the City shall promptly investigate the conditions, and if it finds that the conditions do materially so differ, or do involve hazardous waste, and cause a decrease or increase in the Contractor's cost of, or the time required for, performance of any part of work shall issue a change order under the procedures described in the contract.

C. That, in the event that a dispute arises between the City and the Contractor whether the conditions materially differ, or involve hazardous waste, or cause a decrease or increase in the Contractor cost of, or time required for, performance of any part of the work, the

Contractor shall not be excused from any scheduled completion date provided for by the contract, but shall proceed with all work to be performed under the contract. The Contractor shall retain any and all rights provided either by contract or by law which pertains to the resolution of disputes and protests between the contracting parties.

SECTION 11 - REMOVAL, RELOCATION OR PROTECTION OF EXISTING UTILITIES

11-1. Pursuant to Government Code Section 4215 et seq, the City shall assume the responsibility between the parties to this contract, for the timely removal, relocation, or protection of existing main or trunk line utility facilities located on the site of the construction project for this contract, if such utilities are not identified by the public agency in the plans and specifications made a part of the invitation for bids.

11-2. The Contractor shall be compensated for the costs of locating, repairing damage not due to the failure of the Contractor to exercise reasonable care, and removing or relocating such utility facilities not identified in the plans and specifications with reasonable accuracy and for equipment on the project necessarily identified during such work.

11-3. The Contractor shall not be assessed liquidated damages for delay in completion of the project, when such delay was caused by the failure of the City, or the owner of the utility to provide for removal or relocation of such utility facilities.

11.4. The City shall not be required to indicate the presence of existing service laterals or appurtenances whenever the presence of such utilities on the site of the construction project can be inferred from the presence of other visible facilities, such as buildings, meter and junction boxes, on adjacent to the site of construction, provided, however, nothing herein shall relieve the City from identifying main or trunk lines in the plans and specifications.

11.5. Nothing herein shall preclude the City from pursuing appropriate remedy against the utility for delays which are the responsibility of the utility.

11.6. If the Contractor, while performing the contract, discovers utility facilities not identified by the City in the contract plans or specifications, Contractor shall immediately notify the City and the utility in writing.

11.7. The public utility, when it is the owner, shall have the sole discretion to perform repairs or relocation work or permit the Contractor to do such repairs or relocation work at a reasonable price.

11.8. Contractor shall comply with Government Code Section 4216 through 4216.9.

11.9. Conduits from existing street light and traffic signal systems may be encountered during construction of this project. All removals, relocations, and/or replacements of existing conduit systems shall be performed in accordance with these specifications and City standards, by a qualified electrical contractor. All costs for said work shall be borne by the Contractor and paid as a part of the

various items of work requiring such removals, relocations, and/or replacements, and no other compensation shall be made therefore.

SECTION 200 - ROCK MATERIALS

200-2 UNTREATED BASE MATERIALS.

200-2.1 General. - *Amend the first paragraph as follows:*
"Materials for use as untreated base or subbase shall be classified in the order of preference as follows:
Crushed Aggregate Base
Crushed Miscellaneous Base
Pulverized Miscellaneous Base."

200-2.4.1 General. - *Delete the second sentence and replace with the following:*
"The material shall be free of deleterious material as defined in 200-1.1."

200-2.4.2 Grading. - *Amend the first sentence of paragraph 1 as follows:*
"The material shall be uniformly graded and shall conform to the 'fine' gradations:"

200-2.5.1 General. - *Delete the third sentence and replace with the following:*
"The material shall be free of deleterious material as defined in 200-1.1."

200-2.8.1 General. - *Amend as follows:*
Delete the second sentence of paragraph 1 and replace with the following:
"Pulverized miscellaneous base may contain underlying base material."

Delete the third sentence of paragraph 1 and replace with the following:
"The material shall be free of deleterious material as defined in 200-1.1."

SECTION 201 - CONCRETE, MORTAR AND RELATED MATERIALS

201-1 PORTLAND CEMENT CONCRETE.

201-1.1.1 General - *Add the following paragraph:*
The Contractor shall furnish the Engineer in the field with a copy of the mix design to be used, and with a legible certified weighmaster's certificate for each load of PCC delivered to the project. PCC delivered to the project site having a water content and/or slump greater than that specified in the mix design, shall be rejected and removed from the project site.

201-1.1.2 Concrete Specified by Class and Alternate Class - *Amend Table 201-1.1.2.(A) as follows:*

Street Surface Improvements section -

All concrete in this section shall have a minimum compressive strength at 28 days of 22,410 kPa (3,250 pounds per square inch), and meet the requirements of class 330-C-23 (560-C-3250) concrete.

Sewer & Storm Drain Facilities section, Sidehill Surface Drainage Facilities subsection - All concrete in this subsection shall have a minimum compressive strength at 28 days of 22,410 kPa (3,250 pounds per square inch), and meet the requirements of class 330-C-23 (560-C-3250) concrete.

201-1.4.3 Transit Mixers. - *Replace the first sentence in paragraph 6 with the following:*
The total elapsed time between addition of water at the batch plant and the completion of the discharge of the PCC from the mixer, shall not exceed ninety (90) minutes. All PCC remaining in the mixer, after said ninety (90) minutes time limit, shall be rejected and removed from the project site.

SECTION 203 - BITUMINOUS MATERIALS

203-3 EMULSIFIED ASPHALT.

203-3.1 General. - *Modify the section by adding the following:*
Asphalt emulsion shall be a QUICKSET ANIONIC OR CATIONIC EMULSIFIED ASPHALT conforming to the requirements of Subsection 203-1.3, "Test Reports and Certification", and Subsection 203-1.2, "Testing Requirements" of the Standard Specifications.

The latex additive shall be Ultra Pave 70 (for anionic) or Ultra Pave 65 K (for cationic) or an approved equal. The latex shall be added at the emulsion plant after weighing the asphalt and before the addition of mixing water. The latex shall be added at a rate of two to two-and-one-half (2 to 225) parts to one-hundred (100) parts of emulsion by volume.

203-5 SLURRY SEAL.

203-5.1 General. - *Delete the sentence and replace with the following:*
Slurry seal shall be emulsion-aggregate slurry (EAS) conforming to 203-5.4.

203-5.2 Mix Design. - *Modify the section by adding the following:*

(f) Admixtures, such as Portland Cement or aluminum sulfate may be mixed into the slurry material to adjust curing time such that the applied slurry can support vehicular traffic within 60 minutes.

(g) Use of slag shall not be permitted.

(h) Deliveries of aggregate and emulsion shall not be made without the engineer present. Emulsion is not to be transferred to an on-site storage tanker without the sieve test performed by the City.

203-5.3.2 Grading. - *Delete the sentence and replace with the following:*
The combined aggregate gradation shall be determined in accordance with ASTM C136 and conform to Type II requirements shown in Table 203-5.3.2 (A).

203-5.4.1 General. – *Modify the paragraph and replace with the following:*
EAS shall be a stable mixture of emulsified asphalt, aggregate, water, a set control agent, and latex. EAS shall be Type II-CQS-1h-EAS.

203-5.4.2.1 Aggregate. – *Delete the sentence and replace with the following:*
Aggregate shall be Type II conforming to 203-5.3.

203-5.4.2.2 Emulsified Asphalt. – *Modify the first paragraph and replace with the following:*
Emulsified asphalt shall be quick-set, and contain latex. Quick-set emulsified asphalt shall be CQS-1h conforming to 203-3.

203-6 ASPHALT CONCRETE.

203-6.1 General. - *Add the following paragraph:*
Unless otherwise approved by the Engineer, asphalt concrete for paving shall be C2-PG 64-10 (1/2") for finish paving or B-PG 64-10 (3/4") for base paving. Asphalt concrete for Type D1 or Type D2 curb shall be D2 –PG 70-10.

SECTION 206 - MISCELLANEOUS METAL ITEMS

206-7 TRAFFIC SIGNS.

206-7.1 General. The Contractor shall furnish or relocate and erect all traffic signage as required and specified.

All new traffic signage shall be a minimum of the encapsulated lens (high intensity) type, have an anti-graffiti protective covering and be installed on new posts. All traffic signage to be relocated shall be installed on new posts.

206-7.2 Protective Covering. Anti-graffiti protective covering shall be Type 1150-POF, manufactured by 3M Company, or approved equal.

206-7.3 Post and Base. New posts and bases shall be Ultimate Sign Support System as manufactured by Western Highway, or approved equal.

SECTION 207 – GRAVITY PIPE

207-2 REINFORCED CONCRETE PIPE (RCP).

207-2.1 General. - *Add the following sentences to paragraph 2:*

The minimum D-load for any RCP shall be 1,350. The minimum size for RCP shall be 18 inches (457 mm) unless otherwise approved by the Engineer.

SECTION 211 - MATERIAL TESTS

211-1 COMPACTION TESTS.

211-1.4 General. The Contractor shall be responsible for all quality control for all work. The Contractor shall complete all necessary testing to ensure the quality requirements within the specifications are achieved. The Contractor shall conduct the compaction testing by a geotechnical engineering firm and the results of the testing shall be made available to the Engineer.

The City will complete assurance testing throughout the project by an independent testing firm. The City will perform the first compaction test required at any location. If such test does not meet the required specifications, the City will make additional tests until the required compaction is obtained and withhold from the final payment due the Contractor, the cost of all such additional tests. To be acceptable, tests must be ordered and witnessed by the City. Tests will be ordered by the City and performed at a location and depth as directed by the City. The Contractor shall assist the City in performing these tests as necessary. The Contractor shall provide to the City the maximum dry density and the optimum moisture content results of backfill and bedding material when requested by the City.

SECTION 214 - TRAFFIC STRIPING, CURB AND PAVEMENT MARKINGS, AND PAVEMENT MARKERS

214-4 PAINT FOR STRIPING AND MARKINGS.

214-4.1 General. - *Amend the first sentence in paragraph 4 as follows:*
"Glass beads conforming to 214-3 shall be mechanically applied at a rate of 0.6 to 0.8 kg of beads per liter (5 to 7 pounds of beads per gallon)."

SECTION 300 - EARTHWORK

300-1 CLEARING AND GRUBBING.

300-1.1 General. - *Amend as follows:*

Amend paragraph 3 as follows:
"The natural ground surface shall be cleared of all vegetable growth, such as trees, logs, upturned stumps, roots of downed trees, brush, grass, weeds, shrubs, ground cover, tree stumps, decorative landscape rocks, edging, railroad ties, other decorative landscape treatments, boulders, rock, portland cement concrete, and all other objectionable materials, within the limits of construction."

Add the following paragraphs:

Grubbing and removal of organic debris shall include the repair and/or replacement of all parkway irrigation piping and systems necessary to perform work on this Contract and capping pipelines until such time that permanent repairs and/or replacements have been made.

All debris removed from the project site under this item shall be disposed of at an approved dump site. All transportation costs and dump fees shall be borne by the Contractor.

Clearing and Grubbing shall include, but is not limited to, the following:

1. Removal of existing AC berms.

2. Removal of all curb and gutter, cross gutters, and spandrels shall be replaced within three (3) calendar days. The Asphalt Concrete patch for areas with curbs and gutters removed and replaced shall be placed within two (2) working days after the curb and gutter, cross gutters, and spandrels are replaced. Removal of all sidewalks shall be replaced within three (3) calendar days.

3. Saw cut and removal of poles, posts, PCC pavements, curb, gutter, and sidewalk. Holes resulting from removal of existing poles and posts from existing PCC, AC pavements and curbs and gutters, shall be filled or patched with like materials. Self-propelled drop hammers will not be allowed for removals.

4. Removal of all raised pavement markers not conforming to the approved plan or conflicting with the proposed striping as shown on the plans in accordance with Subsection 312-3, Removal, of the Standard Specifications.

5. Removal and disposal of boulders, rock or PCC.

6. All trees and shrubs less than 3m (9 ft) directly above the entire sidewalk surface shall be trimmed and removed by the contractor to allow a clear path of travel for pedestrians.

7. Irrigation system relocation:

   Any irrigation systems in conflict with the proposed improvements that are removed, damaged, disturbed, or broken shall be modified, repaired, and/or replaced to be operable and provide full irrigation coverage to the areas requiring irrigation using new materials, equal or better than the original materials, with 20 mm (3/4 in) Schedule 40 PVC being the minimum acceptable for underground lines and 13 mm (1/2 in) Schedule 80 being minimum acceptable for risers and with the systems not being out of operation for more than two (2) days. No payment for work associated with the irrigation repair will be released, until all irrigation is complete, operable and accepted by the City.

   All trees, shrubbery and lawns deprived of normal irrigation watering due to a disruption of service caused by the Contractor's operations shall be regularly and thoroughly irrigated by the Contractor so that said plantings will not be damaged. If any trees, shrubbery or lawns die or suffer unacceptable damage as a result of or precipitated by the Contractor's

operations the Contractor shall replace same with the same plant species and size. Existing grass lawns within areas that must be excavated and/or re-graded shall be cut into approximate 305 mm (1 ft) squares, removed, protected, cared for and replaced as soon as possible. Dead, dying, and unacceptably damaged grass shall be replaced with new grass sod.

8. Existing inlets, slotted drains, drainage pipes, concrete gutters, drainage pipes, where any portion of such structure is within 1m of the grading plane in the excavation areas, or within 300 mm (1 ft) of original ground in embankment areas, or where shown on the plans to be removed, shall be completely removed and disposed of accordingly.

9. Removal and disposal of existing drainage inlet structure and PCC or AC apron.

10. The Contractor shall dispose all materials not being salvaged outside of the right-of-way and shall pay for all costs for disposal.

11. Removal and disposal of any abandoned utilities that may interfere with the improvements.

12. Self-propelled drop hammers will not be allowed for removals.

300-1.3.1 General. - *Add the following paragraphs:*
The Contractor shall dispose of portland cement concrete, stone rubble, and brick at an approved dump site.

All reprocessed asphaltic cement concrete may be placed as the lower course of crushed aggregate base material. If the Contractor chooses not to reprocess the material, disposal at an approved dump site shall be required. All costs for disposal shall be borne by the Contractor. If the Contractor chooses to reprocess material, it shall be protected and remain contaminate-free, otherwise disposal at an approved dump site will be required with all costs borne by the Contractor.

All reprocessed asphaltic cement concrete to be used as crushed aggregate base shall be ground to conform to Section 200-2.2.

300-1.3.2 (a) Bituminous Pavement. - *Amend the following:*

Amend the second sentence as follows:
"Saw cutting of edges to be joined shall be with a power-driven saw. The groove shall be cut to a minimum depth of 4 inches (102 mm)."

Amend the third sentence as follows:
"Where bituminous pavement is to be removed, a cold mill header cut of maximum 6 feet (1.8 m) in width perpendicular to the join line shall be made, and a minimum laying depth of 1 inch (25mm) of new pavement material shall be provided at the join line."

Amend the fourth sentence as follows:

"The edges of existing concrete pavement adjacent to the trench shall be saw cut to neat straight lines for the purpose of removing the damaged pavement areas."

Add the following sentence:
Work under this item shall include asphalt concrete berms.

300-1.3.2 (b) Concrete Pavement. - *Amend the following:*

Amend the second sentence as follows:
"Saw cuts shall be made to a minimum depth of 4 inches (102 mm)."

Amend the third sentence as follows:
"If a saw cut in concrete pavement falls within 5 feet (1.5 m) of a construction joint, cold joint, expansion joint, or edge, the concrete shall be removed to the joint or edge."

300-1.3.2 (c) Concrete Curb, Walk, Gutters, Cross Gutters, Driveways and Alley Intersections. - *Amend the following:*
Amend the first sentence as follows:
"Concrete shall be removed to neatly sawed edges with saw cuts made to a minimum depth of 4 inches (102 mm)."

Amend the third sentence as follows:
"No section to be replaced shall be smaller than 36 inches (1 m) in either length or width."

Amend the fourth sentence as follows:
"If the saw cut in sidewalk or driveway would fall within 36 inches (914 mm) of a construction joint, expansion joint, or edge, the concrete shall be removed to the joint or edge, except that where the saw cut would fall within 12 inches (300mm) of a score mark, the saw cut shall be made in and along the score mark."

Amend the fifth sentence as follows:
"curb and gutter shall be sawed to a depth of 4 inches (102 mm) on a neat line at right angles to the curb face."

300-1.3.2 (d) Striping and Markings. All existing striping, markings and raised pavement markers shown to be removed or necessary to be removed from paving areas. This item includes removal in compliance with applicable laws and cleanup of residue from the operation.

All striping, markings and raised pavement markers removed beyond the limits shown on the plans for and/or at the convenience of the Contractor shall be replaced at the Contractor's expense.

300-1.3.2 (e) Structures. All existing concrete structures (reinforced or non-reinforced) as shown on the plans to be removed or abandoned, including but not limited to, undersidewalk drains, manholes, headwalls, bulkheads, drop inlet structures, energy dissipaters, catch basins, vaults and pipelines. Abandonment shall include all cuts and concrete plugs necessary to seal ends or openings of abandoned pipes or structures.

300-1.3.2 (f) Rock Curbs. All rock from rock curb removals, as shown on the plans or required for construction of the project, shall be transported, delivered and unloaded at a storage site as directed by the Engineer.

300-1.3.2 (g) Miscellaneous Removals. All other removals of facilities, as shown on the plans but not covered under separate bid items, and any underground facilities found during the work and not shown on the plans shall be performed. The City has endeavored to show all known underground facilities but is not responsible for unknown or abandoned facilities. Unknown underground facilities shall be paid as extra work.

300-1.3.2 (h) Miscellaneous Relocations. All relocation work as shown on the plans or required for construction of the project, but not covered under separate bid items, shall be included as a part of Subsection 300-1 Clearing and Grubbing. All relocation work performed as a part of clearing and grubbing work shall conform to the requirements and specifications of the agency or utility having jurisdiction over the item to be relocated.

300-1.4 Payment. - *Add the following sentence to paragraph 1:*
Payment for work on this item shall be made as a percentage of the work completed at each monthly payment.

300-2 UNCLASSIFIED EXCAVATION.

300-2.2.2 Wet Material. - *Amend the second sentence of the paragraph:*
"If such high moisture content is not the result of any action on the part of the Contractor, or inaction in protecting the work during the course of the contract, the work involved will be paid for in the following manner: Over-excavation and disposal work shall be considered "extra work," with backfill and compaction of crushed aggregate base paid under the appropriate bid item in these specifications."

300-12 MISCELLAENOUS GRADING. The parkway, whether landscaping exists or not, shall be graded and compacted to achieve drainage towards the street at a slope of 2%. Grading shall be coordinated such that it is the last item of work to be completed, prior to site clean-up. Loose material and dirt shall be raked, compacted and distributed throughout the parkway area. Areas adjacent to installed improvements must be graded to a level within one inch from the finished surface. Extra dirt/fill shall be removed from the project in accordance with Specifications.

The Contractor, at his expense shall photo-document pre-construction conditions prior to starting excavating. After construction is completed, the Contractor shall photo-document the finished grade. The Contractor shall provide the City with said photos with addresses identifying each property location, the direction the photograph was taken (facing North, South etc). The Contractor shall keep a copy of the photos (either electronically or hard copy) and provide the City with electronic copies of the photos.

SECTION 301 - TREATED SOIL, SUBGRADE PREPARATION AND PLACEMENT OF BASE MATERIALS

301-1 SUBGRADE PREPARATION.

301-1.3 Relative Compaction. - *Amend the second sentence of paragraph 1 as follows:*
"When base material, curb, gutter, alley pavement, driveways, or sidewalks are to be placed on the subgrade material, the top 6 inches (150mm) of such subgrade material shall be compacted to a relative compaction of 95 percent."

301-2.1 General. – *Add the following paragraphs:*
The contractor shall use 'crushed aggregate base' or 'crushed miscellaneous base, fine graded' as the base material. The use of 'processed miscellaneous base,' 'select subbase,' or 'disintegrated granite' shall not be used as base material.

The contractor may use 'pulverized miscellaneous base' (grindings) as part of the crushed base material. Said grindings shall be uncontaminated and placed in an even thickness as the lower course of crushed base material. Spreading and compacting shall comply with Sections 301-2.2 and 301-2.3.

301-2.3 Compacting. – *Amend the second sentence of paragraph 3 as follows:*
"Compaction in the excepted areas shall be as specified in 211-1 with each layer of compacted base material having a minimum relative compaction of 95 percent."

301-2.4 Measurement and Payment. – *Add the following paragraph:*
Payment shall be made for cold-planing, storing, placing, and compacting reprocessed asphalt concrete pavement (grindings) as part of the crushed aggregate base (CAB) material. The volume of grindings placed shall be figured and a tonnage figure computed using 9.35 kg/m^3 (150 pounds per cubic foot). This tonnage figure shall be paid as part of the crushed aggregate base tonnage for this project.

301-7 FULL DEPTH RECLAMATION WITH MECHANICAL STABILIZATION (FDR-25)

301-7.1 Description. This rehabilitation alternative consists of pulverizing the existing asphalt concrete (AC) layer along with the underlying unbound material to a depth of 6, 9 or 12 inches per plan and specifications. The properties of this layer are considered to be similar to an Aggregate Subbase material with a modulus of at least 25 ksi.

The manufacture of the recycled base course shall be done in-place by pulverizing and blending the existing AC layer and base materials, if present. The process shall be accomplished in accordance with these specifications and conform to the lines and grades shown in the plans or as established by the engineer.

301-7.2 Construction. The asphalt concrete surfacing and underlying base materials shall be pulverized such that 100 percent of the material will pass a two-inch sieve and a minimum of 90

percent will pass a one and one-half inch sieve. All materials other than rock and pulverized asphalt concrete shall be broken up such that these materials will pass a one inch sieve. The pulverized materials shall be free of roots, weeds, wood, and construction debris. All grass and other vegetation shall be removed from the edge of the exiting pavement or lip of gutter pan to prevent contamination of the pulverized bituminous material during the milling operation.

Trimming and disposal of excess material, if required, will be performed on the intimate mixture of pulverized asphalt concrete, base materials and subgrade soil. Excess pulverized material is the surplus that results after trimming and grading the pulverized pavement section to the lines and grades matching existing and/or per plans and specifications.

Do not start pulverized roadbed activities if the ambient air temperature is below 40F. If the ambient air temperature falls below 40F, you may only compact and finish pulverized roadbed. Before starting daily pulverized roadbed activities, sweep the pulverized roadbed area constructed the previous day to remove loose material.

301-7.3 Surface Preparation. Before pulverized roadbed activities start, prepare the existing roadway surface by:

1. Clearing foreign matter including vegetation
2. Removing standing water
3. Referencing the profile and cross slope
4. Marking the proposed longitudinal cut lines on the existing pavement as follows:
   4.1. Cut lines must coincide with points where the existing cross slope changes, approximately at the centerline and edge of traveled way
   4.2. Cut lines must indicate the sequence of the cuts
5. Referencing existing lane lines and striping layout

Final subgrade surface shall slope away from the street centerline to a maximum of 3% grade. Pulverized asphalt material must be used as base material to meet new cross slope requirements. Native sub-grade material may need to be hauled off to allow for the use of all pulverized base material. No additional compensation will be allowed for any sub-grade removal and haul-off if required. Any contaminated material will be removed and disposed of by the contractor off site at his expense. Any shortage of material, caused by premature disposal of the indicated surplus material by the contractor, shall be replaced by it and no additional compensation will be allowed for such replacement.

301-7.4 Spreading, Mixing, and Compacting. Do not use a heating device to soften the pavement. Remove any visible oversized materials in the pulverized roadbed mixture prior to shaping and compacting. If you encounter unstable subgrade or rocks greater than 4 inches in the roadway section, notify the Engineer. The Engineer determines the extent of the unsuitable material and the corrective measures to be taken.

According to the Section 301-2.3, the compaction shall always be commenced along the edge of the area to be compacted and the roller shall gradually advance toward the center of the area to be compacted. Rollers shall be operated along lines parallel or concentric with the centerline of the

road being constructed, and no material variation therefrom will be permitted. All rollers must be maintained in good mechanical and working condition.

The relative compaction of each layer of compacted base material shall not be less than 95 percent. ASTM D2922, Methods of Density of Soil and Soil Aggregate in Place by Nuclear Methods, (or ASTM D1556). After compaction, the sub-grade shall be firm, and unyielding.

301-7.5 Finishing. The finished pulverized roadbed surface must not vary more than 0.05 foot from the lower edge of a 12-foot straight edge laid in directions parallel and perpendicular to the centerline. Variations within the above specified tolerances shall be compensating so that the average grade and cross section specified are met. The finished surface must be free from segregation, tearing, and scarring, and have a uniform surface texture throughout the work limits.

301-8 FULL DEPTH RECLAMATION WITH CEMENT STABILIZATION (FDR-200)

301-8.1 Description. This rehabilitation alternative consists of pulverizing the existing asphalt concrete (AC) layer along with the underlying unbound material to a depth of 6, 9 or 12 inches per plan and specifications. The properties of this layer are considered to be similar to an Aggregate Subbase material with a modulus of at least 200 ksi.

The manufacture of the recycled base course shall be done in-place by pulverizing and blending the existing AC layer and base materials, if present, and adding cement. Micro-cracking of the completed cement stabilized surface is required before HMA is to be placed directly on top of the cement treated surface, regardless of the AC thickness. The process shall be accomplished in accordance with these specifications and conform to the lines and grades shown in the plans or as established by the engineer.

The cement content must be 2% by dry weight of FDR with cement with a dry unit weight of 130 lb/cu ft for 6” FDR section. The cement content must be 3% by dry weight of FDR with cement with a dry unit weight of 130 lb/cu ft for 9” FDR section. The cement content must be 4% by dry weight of FDR with cement with a dry unit weight of 130 lb/cu ft for 12” FDR section. Cement must be Type II or Type V Portland cement specified in ASTM C 150/150M.

301-8.2 Construction. The asphalt concrete surfacing and underlying base materials shall be pulverized such that 100 percent of the material will pass a two-inch sieve and a minimum of 90 percent will pass a one and one-half inch sieve. All materials other than rock and pulverized asphalt concrete shall be broken up such that these materials will pass a one inch sieve. The pulverized materials shall be free of grass and vegetation, and construction debris to prevent contamination of the pulverized materials. Mixing shall continue until, and at the speed of the recycling unit adjusted to ensure, a homogenous mixture of the above materials and pulverized materials are achieved.

Trimming and disposal of excess material, if required, will be performed on the intimate mixture of pulverized asphalt concrete, base materials and subgrade soil. Excess pulverized material is the surplus that results after trimming and grading the pulverized pavement section to the lines and

grades matching existing and/or per plans and specifications. Excess pulverized material shall consist of non-treated well mixed pulverized AC pavement and subgrade.

Do not start pulverized roadbed activities if the ambient air temperature is below 40F. If the ambient air temperature falls below 40F, you may only compact and finish pulverized roadbed. Before starting daily pulverized roadbed activities, sweep the pulverized roadbed area constructed the previous day to remove loose material.

301-8.3 Surface Preparation. Before pulverized roadbed activities start, prepare the existing roadway surface by:

1. Clearing foreign matter including vegetation
2. Removing standing water
3. Referencing the profile and cross slope
4. Marking the proposed longitudinal cut lines on the existing pavement as follows:
   4.1. Cut lines must coincide with points where the existing cross slope changes, approximately at the centerline and edge of traveled way
   4.2. Cut lines must indicate the sequence of the cuts
5. Referencing existing lane lines and striping layout

Final pavement surface shall slope away from the street centerline to a maximum of 3% grade. Pulverized material must be used as base material to meet new cross slope requirements. Native sub-grade material may need to be hauled off to allow for the use of all the pulverized base material. No additional compensation will be allowed for any sub-grade removal and haul-off if required. Any contaminated material will be removed and disposed of by the contractor off site at his expense. Any shortage of material, caused by premature disposal of the indicated surplus material by the contractor, shall be replaced by it and no additional compensation will be allowed for such replacement.

301-8.4 Spreading, Mixing, and Compacting. Do not use a heating device to soften the pavement. Remove any visible oversized materials in the pulverized roadbed mixture before shaping and compacting. If you encounter unstable subgrade or rocks greater than 4 inches in the roadway section, notify the Engineer. The Engineer determines the extent of the unsuitable material and the corrective measures to be taken.

Recycling shall be performed to the depth provided in the plans, while incorporating stabilizing agents, mineral filler, additional aggregate and water. Mixing shall continue until, and the speed of the recycling unit adjusted to ensure, a homogenous mixture of the above materials and pulverized materials is achieved. Pre-cutting, grading and light compacting of the recycled material shall be performed prior to incorporation of the stabilizing. Spread cement uniformly over the full roadway surface width. Do not spread cement more than 30 minutes before mixing. Do not apply dry cement in windy conditions that will result in dust outside the FDR with cement area. The application rate must be the mix design rate or the ordered application rate in lb/sq yd ± 0.5 percent. The application rate of all stabilizing agents shall be continuously monitored. If the measured application rate falls outside the above tolerance, then the recycling operations shall be stopped and corrected before proceeding. Do not spread cement and aggregate before pulverizing.

Water must be injected through the pulverizing machine. The injection rate of mixing water must be sufficient to produce the FDR with cement material mixing moisture content. The water content of the stabilized material shall be monitored closely to ensure proper compaction. Mark where the center of the pulverizing drum stops. Start the following cut on this alignment at least 2 feet behind the mark. Before compacting, remove solids larger than 3 inches in any dimension by hand.

Immediately after pulverizing and mixing, compact FDR with cement to the minimum relative compaction. Do not allow more than 2 hours between final mixing of the pulverized material with cement and completion of initial compaction before trimming. During grading and final compaction add water to maintain the mixing moisture content as described in the mix design. Do not allow more than 2 hours to elapse from the time water is added to the aggregate and cement to completion of final compaction after trimming.

Longitudinal joints between adjacent stabilization passes shall be overlapped at least 4 inches. Transverse joints between the recycling process shall be saw-cut, if necessary, to provide a vertical clean face to ensure proper compaction. Compaction of cementitious stabilizer begins within 20 minutes after mixing and achieving gradation and moisture requirements.

According to the Section 301-2.3, the compaction shall always be commenced along the edge of the area to be compacted and the roller shall gradually advance toward the center of the area to be compacted. Rollers shall be operated along lines parallel or concentric with the centerline of the road being constructed, and no material variation therefrom will be permitted. All rollers must be maintained in good mechanical and working condition.

The relative compaction of each layer of compacted base material shall not be less than 95 percent. ASTM D2922, Methods of Density of Soil and Soil Aggregate in Place by Nuclear Methods, (or ASTM D1556). After compaction, the sub-grade shall be firm, and unyielding.

Construction joints shall have vertical faces and shall be made in thoroughly compacted material. Additional mixture shall not be placed against the construction joint until the joint has been approved by the Engineer. The face of the cut joint shall be lean and free of deleterious material and shall be kept moist until the placing of the adjacent FDR with cement.

301-8.5 Finishing. Once the entire working width (full lane width plus effected shoulder width) has been stabilized, and only after primary compaction has been completed, the entire working width shall be graded to the required profile and cross-slope. Disturbance to the stabilized and primary compacted material shall be kept to a minimum during this grading and shaping operation.

The finished pulverized roadbed surface must not vary more than 0.05 foot from the lower edge of a 12-foot straight edge laid in directions parallel and perpendicular to the centerline. Variations within the above specified tolerances shall be compensating so that the average grade and cross section specified are met. The finished surface must be free from segregation, tearing, and scarring, and have a uniform surface texture throughout the work limits.

Immediately after compaction, apply water and roll with no vibration. The finished surface must be free of ruts, bump, indentations, segregation, raveling, and any loose material.

The completed cement treated subgrade shall be moist cured continuously until it is in a firm and unyielding condition. The cement treated subgrade shall be kept free from heavy traffic during the curing period or until the asphalt concrete surfacing is placed whichever is less, unless otherwise directed by the Engineer. Moisture curing shall be the only method of curing prior to micro-cracking.

Micro-cracking shall be performed with several vibratory roller passes 48 to 72 hours after finish grading to prevent severe, wide cracks from forming thus reduces the potential for reflective cracking through the HMA layer. Micro-cracking shall be performed before the application of asphaltic emulsion curing seal. After micro-cracking is complete additional moisture curing may be used. Any additional water required to achieve maximum density shall be applied by spraying the surface of the stabilized material with light applications. Care shall be taken so as not to over-apply additional water to any areas of the stabilized material.

While open to traffic and before placing HMA, maintain the FDR with cement surface free of ruts, bumps, indentations, raveling, and segregation. If FDR with cement material is damaged, it shall be repaired by removing and replacing the entire depth of affected layers in the damaged area. Feathering will not be permitted for repair of low areas.

Asphaltic emulsion curing seal must be applied on the completed cement treated base immediately before placing HMA. Asphaltic emulsion curing seal must comply with Caltrans Standard Section 94, Grade SS1 or CSS1. Dilute and thoroughly mix asphaltic emulsion for curing seal at a ratio of 1 part water to 1 part asphaltic emulsion. The water must no cause premature separation of the emulsion. Uniformly apply the diluted curing seal at a rate of 0.1 gal/yd2 of cement treated base surface.

SECTION 302 - ROADWAY SURFACING

302-4 SLURRY SEAL SURFACING.

302-4.3.1 General. – *Add the following paragraphs:*
All slurry mixing machines shall be equipped with a Fines Feeder for the adding of cement or granular Aluminum Sulfate.

Prior to the beginning of slurry operations, the Contractor shall furnish, at no cost to the City, current licensed weigh master's certificates indicating the net weight capacity of the aggregate bin. The Contractor shall provide a drive upon scale at the project site or an alternate site approved by the City. The drive on scale shall show the net weight of the aggregate bin on each slurry machine before the machine and product will be approved for applying slurry on the project.

All slurry machines are to carry, at all times, a calibrated emulsion measuring stick. The emulsion measuring stick is to be calibrated in 10-gallon increments to the slurry machine it is used on. Emulsion measuring sticks from other slurry machines will not be allowed to measure the gallons

of emulsions on the slurry machines they were not calibrated to. The emulsion measuring stick is to have the slurry machine number or identification permanently marked on the stick. The gallons of emulsion are to be measured with a calibrated emulsion measuring stick and recorded before leaving and after returning to materials site. Use of a slurry machine will not be allowed if it does not have a calibrated emulsion measuring stick.

The Contractor shall furnish prior commencing work, a calibrated stick in 10-gallon increments to measure the oil in the trailer storage tanks in gallons. The measuring stick shall be calibrated to the trailer storage tank it is used on. The inspector shall check the oil in each load "in and out" and in the storage tanks at the beginning and end of each day to determine the amount of emulsion used for that day. Emulsion is not to be transferred from delivery tank to on-site storage tank before the City performs the sieve analysis on the emulsion. Aggregate used in the slurry shall not exceed a moisture content of four percent (4%) by weight of dry aggregate.

Contractor may not schedule more than 150 tons of slurry to be placed per day. Slurry may not be applied at more than 150 feet per minute.

The Contractor shall provide a self-propelled 10 ton pneumatic roller with a tire pressure of 50 PSI and equipped with a water spray system. The Contractor shall roll the required streets the same day they are slurried. The Contractor will be responsible for proper scheduling of the work such that the rolling can be properly done within the given time constraint. Failure to comply shall result in a $250.00/calendar day liquidated damage being assessed per incident. The cost of furnishing the roller and operator shall be included in the price paid for slurry seal.

The Contractor is hereby advised that City streets, parking lots, or other City-approved property will not be allowed as a site for stockpiling and batching. Arrangements for an acceptable site shall be the sole responsibility of the Contractor.

The Contractor shall sweep any raveled material on the street one (1) week after the initial placement. If the Engineer determines the raveling is excessive, the frequency of sweeping shall be adjusted to the field conditions of the raveling. If raveling continues within two (2) weeks of the initial placement, the street shall be swept and reslurried with a Type I mixtures (Local Streets) or a Type II (Arterial/Collector Streets) at no cost to the City. Raveling can be identified by the presence of "black pebbles" in the gutter.

The Contractor shall remove any and all weeds that are growing through cracks from the project street located within the pavement or growing between the concrete gutter and the pavement and spray a herbicide mixture of either Hyvar mixed with Roundup or Pramatol mixed with Roundup, or approved equal, at least fourteen (14) calendar days prior to slurrying. The herbicide mixture shall contain Blazon, or approved equal, a purple dye to easily confirm the herbicide has been applied. The work shall be approved by the Engineer or his representative prior to slurrying. Full compensation for plant removal and herbicide treatment shall be considered as included in the unit cost for slurry seal.

Longitudinal joints must correspond with lane lines. You may request other longitudinal joint patterns if they do not adversely affect the slurry seal. Spread slurry seal in full lane widths. Do not overlap slurry seal between adjacent lanes more than 3 inches. Use a material, such as building

paper at transverse joints and over previously placed slurry seal to prevent double placement. Remove the material after use. Use hand tools to remove spillage.

Full compensation for developing a water supply, for furnishing and placing all water required for work done in the Contract, including extra work shall be included in the prices paid for the various items of work requiring water; and no separate payment will be made therefore. The Contractor shall supply the City with licensed weighmaster's certificates of weight for all delivered aggregates to the job during the course of each day. Aggregate shall be delivered to the project only in the presence of a City representative. The Contractor shall also present weighmaster certificates for the amount of such aggregate remaining at the completion of the project at no cost to the City. Payment shall be determined by the amount that is physically placed, which cannot exceed the amount that is delivered to the job site with the certified weighmaster tickets. There shall be not outside work done utilizing materials from the tanks or stockpiles stored for the City's Contract.

Prior to storing aggregate on private property, the Contractor shall submit to the Engineer written permission from the property owner for such stockpiling.

Precautions shall be taken to ensure that stockpiles do not become contaminated with oversized rock, clay, silt, or excessive amounts of moisture. The stockpiles shall be kept in areas that drain readily. Segregation of the aggregate will not be permitted.

The Contactor shall protect the wet slurry from traffic at all times and if damaged or defaced, the Contractor shall repair said damage at no additional cost to the City.

The placement of slurry seal may be suspended with the concurrence of the Engineer due to unsuitable weather, temperature conditions, or other conditions that are considered unfavorable for the prosecution of the work. The Contractor shall immediately comply with the order of suspension by the Engineer, and work shall not be resumed until authorized by the Engineer.

302-4.8 Spreading and Application. - *Add the following paragraphs:*
Prior to applying slurry seal, the Contractor shall clean, to the satisfaction of the Engineer, the street surface with a power sweeper, remove all R.P.M.'s, abrasive grind or sandblast completely all lane lines, street legends, crosswalks or other painted or thermoplastic surfaces. This is necessary to provide a good bonding surface for the slurry seal, as well as eliminate "ghosting" of the old striping and markings as the new slurry wears off over time.

It is anticipated that nuisance water, such as storm water runoff and irrigation water, will run in and across the right-of-way at various time throughout the period of construction. It shall be the responsibility of the Contractor, at their own expense, to provide for and protect the work from such water. In addition, the Contactor's responsibility shall include handling nuisance waters such that their operations do not cause them to damage existing improvements or properties adjacent to or near the site of work.

Slurry shall not be applied when the atmospheric temperature is less than 65°F (18°C).

The application of slurry shall not commence until after 8:00 a.m., and shall conclude at 1:30 p.m. unless other authorized by the Engineer. The slurry shall be sufficiently cured to be open to traffic by 4:00 p.m. The portions of streets to be slurried shall be closed from the time the application begins until the mixture as achieved sufficient set to be opened to traffic.

The slurry shall be applied in such a manner that no ripples or waves exist. If ripples or waves occur in the slurry during the application, the work shall cease and the Contractor shall correct the situation. The Contractor may use a drag to knock down ridges. If ripples or waves are not corrected to the Engineer's satisfaction, the street shall be reslurried at the Contractor's expense.

The Contractor shall, at the direction of the Engineer, repair the reseal to the entire street, or complete section thereof, as determined by the Engineer, which have not been sealed properly (includes areas that have failed to meet yield and mix design specifications) and completely. No compensation will be provided for slurry seal used in repair and reseal work.

Each slurry crew shall be composed, at a minimum, of a coordinator at the project site at all times, a competent quick-set mixing man, a competent driver, two squeegee men, and sufficient laborers for any handiwork and cleanup.

Surface oil and grease shall be removed or sealed with shellac or an equivalent material approved by the City before the application of the slurry seal. Full compensation for surface oil and grease removal shall be considered as included in the unit cost for slurry seal.

The Contractor shall roll all cul-de-sacs (the last 250' minimum), the last 250' of dead-end streets and knuckle curves. Full compensation for rolling the slurry shall be considered as include in the unit cost for slurry seal.

During slurry seal operations, it shall be the Contractor's responsibility to place protective covering over, or to otherwise avoid slurry seal coating of manholes, utility covers, pavement markers (reflective and non-reflective), concrete gutters, concrete cross gutters, and drainage facilities, survey monuments and remove said covering and/for slurry seal coating after slurry sealing has been completed.

The start and finish of slurry application shall be a straight line which, unless otherwise approved by the Engineer, shall be obtained by laying a strip of building paper or other material approved by the Engineer on the pavement surface. After application of slurry, the paper is to be removed leaving a straight edge. The entire street surface area shall be sealed the same day.

302-4.8.1 Crack Sealing and Filling. Crack sealing shall be performed prior to the Slurry Seal application. Pavement cracks 1/4" wide and larger shall be sealed. Pavement cracks 1/8" to 1" wide shall be cleared of all loose particles of dust, dirt and laitance with oil-free compressed air immediately preceding the sealing operation. Cracks shall be routed out as necessary to provide a reservoir for the sealer that will have a depth of l" to 1 1/2".

The crack sealing material shall be a hot-applied asphalt (Crafco Polyflex or approved equivalent). The crack sealing material must not be modified or diluted in any way. Pavement cracks larger

than 1” wide shall be filled with the mixtures per Specification Section 203-6.4 Type E (Extra Fine).

A wand and nozzle type application shall be used to fill all cracks with crack sealing material. Crack sealing material shall be applied in two applications with the possibility of additional applications to fill the crack within the allowable tolerance. The cracks must be filled to the surface and not overfilled or applied to the top of adjoining pavement or concrete surfaces. The cracks shall be squeegee immediately after the sealant has been applied to insure conformity with the pavement surface.

The crack sealing material shall then be allowed to penetrate and sink into the crack area for a minimum of one hour. Each crack must then have a second application of crack sealer material applied in the crack area only to within + 0.01' of the adjoining pavement surface. If the material is a cold-applied, polymer modified petroleum emulsion, sand will be applied over the crack sealing material after the second application, covering a minimum of 1 1/2 inches each side of the crack and not more than 3/4 inch higher than the top of the pavement. The contractor shall be responsible for the removal of all excess sand which shall be removed within three hours after being applied.

302-5 ASPHALT CONCRETE PAVEMENT.

302-5.1 General. - *Add the following paragraphs:*
Asphalt concrete pavement structural sections equal to or greater than 3 inches (76 mm) in thickness shall be installed in two lifts. Base course aggregate material size shall be ¾ inch (19 mm) and cap course aggregate material size shall be ½ inch (13 mm). All pavement shall be placed over 4 inches of crushed aggregate base, unless compacted to 95% relative compaction.

All valves within project limits in the public right-of-way shall be raised to finish grade as a part of this work. The Contractor shall furnish and install new can or slip can materials as necessary. If new water valve lids are necessary, they shall be supplied by the Municipal Utilities and Engineering Department. All valve can lids within the project limits in the public right-of-way shall be painted the appropriate color for the utility they represent (ie. Water - Blue, Gas - Yellow, Fire – Red, etc.).

302-5.2 Timeline of Paving Operations.
All paving operations shall follow the timeline and requirements shown below unless otherwise approved by the City:

PAVING TIMELINE				
DESCRIPTION OF WORK	**TIME PERIOD**			
	WEEK 1 (DAY 1-7)	**WEEK 2 (DAY 8-14)**	**WEEK 3 (DAY 15-21)**	**WEEK 4 (DAY 22-28)**
PAVING (START TO FINISH) (1)				
CURE PERIOD (2)				
MANHOLE ADJUST TO GRADE (3)				
STRIPING & PAVEMENT MARKINGS (4)				
TRAFFIC LOOPS (5)				
NO PARKING SIGNS ALLOWED (6)				

Note: All time periods shown above are the maximum amount of allowable time for each activity. This timeline does not apply to the installation or repair of curb and gutter, ac dikes, sidewalks, cross gutters, curb ramps, driveway approaches or truncated domes.

(1) In no case shall any street segment remain unpaved longer than three calendar days if no other work activity is being performed on that street segment. Any deviation from the timeline shall result in a penalty assessment of $1,000 per calendar day.
(2) No work except cat tracking of proposed striping is allowed during this period; therefore "No Parking Signs" shall not be installed during this activity.
(3) Once each manhole is exposed, all associated work to adjust it to grade must be completed within 48 hours. This shall include all adjustments of manholes, vaults, valve cans, etc. as required by the Contract.
(4) All cat tracking and approval of proposed striping shall occur during the cure period.
(5) Traffic loops must be installed after the approval of striping layout and prior to the installation of thermoplastic striping and pavement markings.
(6) "No Parking Signs" shall be installed per Section 7-19 of these specifications.

302-5.4 Tack Coat. – *Delete and replace with the following:*
If the asphalt concrete pavement is being constructed directly upon an existing hard-surfaced pavement, a tack coat of High Performance Seal (HPS) No-Track Tack at an approximate rate of 0.05 gallon per square yard shall be uniformly applied upon the existing pavement preceding the placement of asphalt concrete. The surface shall be free of water, foreign material, or dust when the tack coat is applied. To minimize public inconvenience, no greater area shall be treated in any one day than is planned to be covered by asphalt concrete during the same day, unless otherwise approved by the Engineer.

302-5.5 Distribution and Spreading. – *Add the following:*
Unless otherwise permitted by the Engineer, the top layer of asphalt concrete for shoulders, tapers, transitions, road connections, private drives, curve widening, turnouts, left-turn pockets, and other

such areas, shall not be spread before the top layer of asphalt concrete for the adjoining through lane has been spread and compacted. At locations where the number of lanes are changed, the top layer for the through lanes shall be paved first. Tracks or wheels of spreading equipment shall not be operated on the top layer of asphalt concrete in any area until final compaction has been completed or unless directed by the Engineer.

All screed extensions for paving machines shall be provided with a tamper, roller, or other suitable compacting devices.

Asphalt pavers shall be equipped with automatic screed controls and a sensing device or devices. Automatic grade and slope control shall be used for overlays.

All joints shall be sealed after rolling.

When placing asphalt concrete to the lines and grades noted in the plans or as approved by the Engineer, the automatic screed controls shall control the longitudinal grade and transverse slope of the screed. Grade and slope references shall be furnished, installed, and maintained by the Contractor. The Contractor shall use a ski device, the minimum length of the ski device shall be 30 ft. The ski device shall be a rigid one-piece unit and the entire length shall be utilized in activating the sensor. The Contractor may use a laser to control the screed.

When placing the initial mat of asphalt concrete on existing pavement, the end of the screed nearest the center line shall be controlled by a sensor activated by a ski device not less than 30 ft long. The end of the screed farthest from center line shall be controlled by an automatic transverse slope device set to reproduce the cross slope approved by the Engineer.

When paving contiguously with previously placed mats, the end of the screed adjacent to the previously placed mat shall be controlled by a sensor that responds to the grade of the previously placed mat and will reproduce the grade in the new mat within a 0.01 ft. tolerance. The end of the screed farthest from the previously placed mat shall be controlled in the same manner as when placing the initial mat.

Should the automatic screed controls fail to operate properly during any day's work, the Contractor may use manual control of the spreading equipment for the remainder of that day; however, the equipment shall be corrected or replaced with alternative automatically controlled equipment conforming to the requirements in this section before starting the next day's work.

Should the methods and equipment furnished by the Contractor fail to produce a layer of asphalt concrete conforming to the requirements, including straightedge tolerance, of Subsection 302-5.6.2 - Density and Smoothness, of the Standard Specifications, the paving operation shall be discontinued and the Contractor shall modify his equipment or furnish substitute equipment. A drop-off of more than 0.15 ft will not be allowed at anytime between adjacent lanes open to public traffic.

The Contractor shall schedule his paving operations such that each layer of asphalt concrete is placed on all contiguous lanes of a traveled way each work shift. At the end of each work shift,

the distance between the ends of the layers of asphalt concrete on adjacent lanes shall not be greater than 10 ft. nor less than 5 ft. Additional asphalt concrete shall be placed along the transverse edge at the end of each lane and along the exposed longitudinal edges between adjacent lanes, hand raked, and compacted to form temporary conforms. Kraft paper, or other approved bond breaker, may be placed under the conform tapers to facilitate the removal of the taper when paving operations resume.

302-5.6.1 General. - *Add the following paragraph:*
All asphalt concrete pavement abutting portland cement concrete gutters shall match and be flush with the gutter lip when finish rolling is complete.

302-5.6.2 – Density and Smoothness. – *Delete and replace with the following:*
The completed surfacing shall be thoroughly compacted, smooth and free from ruts, humps, depressions or irregularities. Any ridges, indentations or other objectionable marks left in the surface of the asphalt concrete shall be eliminated by rolling or other means. The use of any equipment that leaves humps, ridges, irregularities or other objectionable marks in the asphalt concrete shall be discontinued, and acceptable equipment shall be furnished by the Contractor.

The finished surface shall meet the following smoothness criteria:

- When a 12 foot long straightedge is laid on the finished surface parallel to the centerline of the roadway, the finished surface shall not vary from the edge of the straightedge more than 0.05 feet, except at changes in grade,
- When a 12 foot long straightedge is laid on the finished surface perpendicular to the centerline of the roadway and extends from edge to edge of a traffic lane, the finished surface shall not vary from the edge of the straightedge more than 0.05 feet, except at changes in grade.

If the top layer of pavement does not comply with the smoothness specifications shown, remove and replace the entire section or complete a grind and overlay of 1.5 inches or 3 times the aggregate size, whichever is greater. Grind and overlay will be considered as a repair method only when the thickness of the asphalt pavement section is greater than 1.5 inches following the required grinding. Corrected section shall be rectangular to the nearest pavement edge or lane line and to a crosswalk, concrete spandrel or other limits approved by the City. Do not begin corrective actions until the method and limit of correction is authorized by the City. If the tolerances cannot be achieved by the methods described above, the contractor must re-pave the street section, in kind, at their own expenses.

The compaction after rolling shall be a minimum of 91 percent and a maximum of 97 percent of the density obtained on samples compacted with the California Kneading Compactor per California Test 304. Cores will be taken randomly by the City for laboratory testing per California Test 308, Method A at a frequency of three per lot. A lot shall consist of a maximum of 3,000 square yards of asphalt concrete and will be identified in the field by the City. The cores will be averaged to determine the percent of maximum theoretical density, as determined by ASTM D-2041, per lot to the nearest tenth of a percent.

Reduced payment factors for percent of maximum theoretical density will be per the following table, and will be applied to the entire lot sampled.

Reduced Payment Factors for Percent of Maximum Theoretical Density

Asphalt Concrete percent of maximum theoretical density	Reduced payment factor	Asphalt Concrete percent of maximum theoretical density	Reduced payment factor
91.0	0.0000	97.0	0.0000
90.9	0.0125	97.1	0.0125
90.8	0.0250	97.2	0.0250
90.7	0.0375	97.3	0.0375
90.6	0.0500	97.4	0.0500
90.5	0.0625	97.5	0.0625
90.4	0.0750	97.6	0.0750
90.3	0.0875	97.7	0.0875
90.2	0.1000	97.8	0.1000
90.1	0.1125	97.9	0.1125
90.0	0.1250	98.0	0.1250
89.9	0.1375	98.1	0.1375
89.8	0.1500	98.2	0.1500
89.7	0.1625	98.3	0.1625
89.6	0.1750	98.4	0.1750
89.5	0.1875	98.5	0.1875
89.4	0.2000	98.6	0.2000
89.3	0.2125	98.7	0.2125
89.2	0.2250	98.8	0.2250
89.1	0.2375	98.9	0.2375
89.0	0.2500	99.0	0.2500
< 89.0	Remove and replace	> 99.0	Remove and replace

In addition to the reduced payment factors below, all costs associated with the testing of the lot which resulted in values outside of the 91-97 percent range, will be withheld from the final payment due to the Contractor.

Following completion of the testing by the City, the core locations within the asphalt pavement shall be repaired by the Contractor.

302-5.6.3 Tracking. All areas receiving asphalt pavement shall be protected from tracking onto adjacent areas. Do not allow traffic on new asphalt pavement until its mid-depth temperature is below 140º Fahrenheit to minimize the tracking.

A rock dust blotter coat per Section 302-9.7 or a sand coat at a rate of 1-2 pounds per square yard shall be applied to the compacted surface for all areas where tracking is a concern. The application of tracking prevention measures shall be determined by the Contractor.

A haul route for all paving operations shall be reviewed and approved by the City prior to the start of any construction activity. No deviations from the approved haul route shall occur unless approved in writing from the City.

All tracking onto adjacent streets, striping or pavement markings shall be the responsibility of the Contractor. All striping and pavement markings shall be removed and replaced in kind by sandblasting. All tracking onto roadway surfaces may require the use of a street sweeper to the satisfaction of the City.

302-5.7 Joints. – *Add the following:*
Longitudinal joints shall be trimmed to a vertical face and to a neat line if the edges of the previously laid surfacing are, in the opinion of the Engineer, in such condition that the quality of the completed joint will be affected. Longitudinal and transverse joints shall be tested with a 12' straightedge and shall be cut back as required to conform to the provisions in Subsection 302-5.6.2 Density and Smoothness for surface smoothness. Connections to existing surfacing shall be feathered to conform to the provisions for smoothness.

Longitudinal joints in the top layer shall correspond with the edges of proposed lane striping. Longitudinal joints in all other layers shall be offset not less than 0.5' alternately each side of the edges of traffic lanes.

All feathered joints shall be sealed after rolling.

302-5.9 Measurement and Payment. – *Add the following:*
Reduced payment factors per 302-5.6.2 will be applied to the Contract Unit Price for lots with a Maximum Theoretical Density less than 91.0 and greater than 97.0 percent.

302-5.10 Hot Asphalt Leveling Course. Areas to receive the Hot Asphalt Concrete Leveling Course shall be determined and defined by the project manager and inspector, and identified to the Contractor in the field. Mix for hot Asphalt Concrete Leveling Course shall be 1/2 inch aggregate, C2, as defined in Section 203-6.4.3.

Areas to receive hot asphalt concrete leveling course shall be areas located near or adjacent to existing curbs and/or gutters that are potholed, or have the lip of gutter higher than the adjacent roadway. Potholes, large cracks, or ruts shall be filled to the surrounding grade elevation and compacted. Hot Asphalt Concrete Leveling Course shall be completed prior to the placement of Type II Slurry Seal, ARAM or resurfacing.

Prior to placement of asphalt concrete, the surface shall be cleaned and all debris and deleterious materials shall be removed. A tack coat meeting the material and application requirements of Section 302-5.4 Tack Coat, shall be applied prior to placement of hot mix asphalt concrete.

302-5.11 Asphalt Pavement Crack Sealing and Filling. Crack sealing shall only be performed as a repair method for conventional hot mix asphalt pavement (HMA) and not installed at project locations which will have asphalt rubber hot mix (ARHM) used as the overlay material. Crack sealing shall be performed after milling of existing asphalt surface and prior to any leveling course, if necessary.

Right after milling of existing asphalt and before crack sealing or filling, Contractor shall remove any and all weeds that are growing through cracks from the project street located within the pavement or

growing between the concrete gutter and the pavement and spray a herbicide mixture of either Hyvar mixed with Roundup or Pramatol mixed with Roundup, or approved equal, at least seven (7) calendar days prior to paving. The herbicide mixture shall contain Blazon, or approved equal, a purple dye to easily confirm the herbicide has been applied. The work shall be approved by the Engineer or his representative prior to paving. Full compensation for plant removal and herbicide treatment shall be considered as included in the unit cost for paving.

The crack sealing material shall be a hot-applied asphalt (Crafco Polyflex or approved equivalent). The crack sealing material must not be modified or diluted in any way. Pavement cracks larger than 1" wide shall be filled with the mixtures per Specification Section 203-6.4 Type E (Extra Fine).

A wand and nozzle type application shall be used to fill all cracks with crack sealing material. Crack sealing material shall be applied in two applications with the possibility of additional applications to fill the crack within the allowable tolerance. The cracks must be filled to the surface and not overfilled or applied to the top of adjoining pavement or concrete surfaces. The cracks shall be squeegee immediately after the sealant has been applied to insure conformity with the pavement surface.

The crack sealing material shall then be allowed to penetrate and sink into the crack area for a minimum of one hour. Each crack must then have a second application of crack sealer material applied in the crack area only to within + 0.01' of the adjoining pavement surface. If the material is a cold-applied, polymer modified petroleum emulsion, sand will be applied over the crack sealing material after the second application, covering a minimum of 1 1/2 inches each side of the crack and not more than 3/4 inch higher than the top of the pavement. The contractor shall be responsible for the removal of all excess sand which shall be removed within three hours after being applied.

SECTION 303 - CONCRETE AND MASONRY CONSTRUCTION

303-1 CONCRETE STRUCTURES.

303-1.1 General. - *Delete the first sentence of paragraph 1 and replace with the following:*
"Concrete bridges, culverts, catch basins, retaining walls, abutments, piers, footings, foundations, drainage inlets, head walls, end walls, wing walls, junction structures, transition structures, manholes, and other similar types of portland cement concrete structures shall be constructed to the lines and grades in conformity with the Plans and Specifications.

303-5 CONCRETE CURBS, WALKS, GUTTERS, CROSS GUTTERS, ALLEY INTERSECTIONS, ACCESS RAMPS, AND DRIVEWAYS.

303-5.1.1 General. - *Replace the last paragraph with the following:*
No PCC shall be ordered and/or placed until the forms and subgrade have been inspected and approved by the Engineer in the field.

All pull boxes, water meter boxes, and water valve covers shall be adjusted to proposed finish grade and approved by the Engineer in the field prior to placement of the PCC.

The Contractor shall barricade and protect placed PCC from all damage, marks, mars, and/or graffiti. Any PCC damaged, defaced, discolored, or defective shall be replaced at the Contractor's expense.

When removals of curb and/or sidewalk are located at curb return, the Contractor shall install access ramps. The Contractor is to construct all access ramps in accordance with American Disability Act (ADA) Standards/California Code of Regulations Title 24 – Accessibility Regulations. If the ramps constructed by the Contractor are found to be in non-compliance with ADA Standards, the Contractor will be required to remove and replace the ramps to ADA Standards at the Contractor's expense.

303-5.1.2 Drainage Outlets Through Curb. - *Add the following paragraph*:
Coring shall be required for all drains through existing curbs.

303-5.1.3 Driveway Entrances. – *Replace the last paragraph with the following:*
Driveway approaches where required, shall be 150 mm (6") thick for single-family residential area, and 200 mm (8") thick for commercial driveway approaches.

303-5.1.4 Walk. The back of sidewalk shall be 2 inches from the street Right-of-Way line unless otherwise specified by the Engineer.

Included in the price of sidewalk construction are retaining curbs. Retaining curbs are needed to retain soils from sloughing and eroding onto the finished sidewalk surface, as a result of grade differentials from existing ground surface to proposed sidewalk surface. Retaining curbs shall be installed when the finished surface is lower than the surrounding grade by 3 inches vertically within 6 inches horizontally. If the vertical difference in elevation is less than 3 inches, the surrounding grade shall be sloped, maximum 2:1 slope, to match the finished elevation. The height of the retaining curb shall be to the height of the existing grade it is retaining. Retaining curbs shall be located within the City's right-of-way at all times.

303-5.1.5 Access Ramps. Construction of curb ramps shall conform to the Type and Case appropriate for the condition, as specified on the plans and as shown within the 2012 Standard Plans for Public Works Construction, Plan 111-5. The Contractor shall be responsible to layout the proposed access ramp to comply with the maximum slope indicated on the plans or Standard Plan 111-5. The maximum slope for the ramp shall not be exceeded unless otherwise approved in writing by the Engineer. The Contractor shall remove and replace access ramps deemed non-compliant with the plans or Standard Plan 111-5.

For proposed locations adjacent to a cross gutter spandrel, sawcuts along the radius of the curb will not be allowed. The spandrel shall be replaced from expansion joint to expansion joint to the extents of the curb removal. For proposed locations adjacent to curb and gutter, sawcuts along the flowline of the curb will not be allowed. The entire curb and gutter shall be replaced from expansion joint to expansion joint as required. Sawcuts at locations other than the expansion joint will not be allowed unless approved by the Engineer. Curb cuts of the existing curb will not be permitted for installation of proposed ramp. Any deviation from these requirements will result in rejection of all work at this location and shall not be included in progress payment requests until corrected, per direction from the Engineer.

The Contractor shall verify the extents of sawcut and removal for each access ramp taking into account the maximum slope and transition area required. It shall be the Contractor's responsibility to identify required removal limits, set concrete forms and verify maximum slopes are not exceeded. The Engineer shall be present to verify the concrete forms prior to the placement of the concrete at each location, however this does not alleviate the responsibility of the accuracy of forms or slopes of the access ramp from the Contractor.

Included in the price of access ramps are retaining curbs. Retaining curbs are needed to retain soils from sloughing and eroding onto the finished ramp surface, as a result of grade differentials from existing ground surface to proposed ramp surface. Retaining curbs shall be installed when the finished surface is lower than the surrounding grade by 3 inches vertically within 6 inches horizontally. If the vertical difference in elevation is less than 3 inches, the surrounding grade shall be sloped, maximum 2:1 slope, to match the finished elevation. The height of the retaining curb shall be to the height of the existing grade it is retaining. Retaining curbs shall be located within the City's right-of-way at all times.

Access Ramps shall have truncated domes installed in accordance with standard plans and specifications. Truncated domes on new access ramps shall be Armor-Tile, Cast in Place System, Equal Tile, or approved equal. Truncated domes installed on existing surfaces shall be Safety Sted TD, or approved equal. Truncated dome panels shall be 36"x48", inline configuration, with a spacing of 2.35" on center, and Federal Yellow in color.

The access ramp work shall include all related adjustments of pull boxes, pull box covers, signs, and protection of any underground utilities within the work area. The removal and replacement of up to 5 linear feet of sidewalk on each side of the access ramp shall be included within the cost of the access ramp. The removal and replacement of the sidewalk will allow for transition from the top of ramp to adjacent sidewalk and will be utilized as necessary.

303-5.4.3 Weakened Plane Joints, (a) General. - *Add the following paragraph:*
All weakened plane joints shall be spaced at a maximum of 3.05 m (10') feet for curbs, gutters, and sidewalks. Scoring lines shall conform to those prevailing in the area and be uniform in spacing.

303-5.5.2 Curb. - *Replace the first paragraph with the following:*
PCC for curb and gutter shall be placed within three working days from removal of the existing PCC curb and gutter. The curb and gutter surface shall not vary more than 3 mm (0.01') from a 3 m (10') straightedge except at the grade changes. Prior to the removal of the forms, the surface shall be finished true to grade by means of a straightedge float of not less than 3 m (10') in length, and operated longitudinally over the surface of the concrete. Form clamps shall be constructed so as not to interfere with the operation of the float. The form on the front of the curbs shall not be removed less than one (1) hour, nor more than six (6) hours after the concrete has been placed. In no event shall forms be removed while the concrete is sufficiently plastic to slump. The top and face of the finished curb shall be true and straight, and top surface of curbs shall be of uniform width, free from humps, sags, blemishes, or other irregularities.

303-5.5.3 Walk. - *Add the following paragraphs:*

The sidewalk surface shall not vary more than 5 mm (0.02') from the 3m (10') straightedge except at grade changes, and the finished surface shall be free from humps, sags, blemishes or other irregularities. All sidewalks shall be a minimum of 100 mm (4") thick, except at driveways where the sidewalks shall be a minimum of 150 mm (6") thick for single family residential areas and 200 mm (8") thick for all other areas.

303-5.6 Curing. - *Add the following paragraph:*
Curing compound shall be translucent with red fugitive dye, Type 1, in accordance with Section 201-4 Concrete Curing Compound, of the Standard Specifications.

303-5.7 Repairs and Replacements. - *Add the following paragraphs:*
In order to minimize vandalism damage to the finished PCC surfaces, the Contractor shall plan his work so that no PCC is poured after 1:00 p.m., unless otherwise authorized by the Engineer in the field.

The Contractor shall barricade and protect placed Portland Cement Concrete from all damages, marks, mars, and/or graffiti. Any Portland Cement Concrete damaged, defaced, discolored, or defective shall be replaced to the satisfaction of the Engineer at the Contractor's expense, and no additional time will be allowed.

Grading, patching, or other remedies to correct the situation will not be accepted unless in the opinion of the Engineer the vandalized area is so small that it does not warrant replacement. Concrete replacement areas shall be from score mark or control joint to score mark or control joint, and full width of the sidewalk. All replacement areas shall be saw cut.

303-5.8 Backfilling and Cleanup. - *Add the following paragraph:*
A minimum of 300mm (12”) wide full depth asphalt concrete pavement repair patch and an 450mm (18”) wide 1-1/2” deep grind outside of the trench width is required when cross gutter, spandrel, driveways, curb and gutter is placed adjacent to existing asphalt concrete pavement. The asphalt concrete pavement repair patch shall be placed within two (2) working days after the cross gutters, spandrels, driveways, curb and gutter are replaced. The asphalt concrete pavement shall be sawcut. All work shall be in accordance with the General Permit Conditions and Trench Specifications, latest edition.

SECTION 304 - METAL FABRICATION AND CONSTRUCTION

304-3 CHAIN LINK FENCE.

304-3.4 Measurement and Payment. - *Delete paragraph 1 and replace with:*
Chain link fence will be measured along the horizontal projection line of the completed fence, deducting the widths of gates and openings.

SECTION 314 - TRAFFIC STRIPING, CURB AND PAVEMENT MARKINGS, AND PAVEMENT MARKERS

314-1 GENERAL. - *Add the following paragraphs:*
To insure the protection of storm drain inlets, Best Management Practices (BMPs) shall be employed during all striping operations. Refer to Section 7-8.6.

Each storm drain catch basin or storm drain inlet box shall be marked "NO DUMPING - FLOWS TO CREEK." Two coats of paint are required. Stencil shall match City's stencil. Paint and painting shall comply with the specifications.

All street resurfacing work shall include installing fire hydrant pavement markers at all fire hydrant location, whether the pavement markers were existing or not. The pavement markers shall be Type I – Two-Way Blue Retroreflective per Section 214-6 of the Specifications and installed per City's detail drawing No. 102-0. All work associated with the installation of all new, or replacement of existing, fire hydrant pavement markers shall be included as noted within the specifications.

314-4 APPLICATION OF TRAFFIC STRIPING AND CURB AND PAVEMENT MARKINGS.

314-4.1 General. – *Add the following paragraphs:*
During construction, if traffic legends or lane striping are removed or paved-over for any reason, they shall be replaced immediately with temporary traffic legends or lane striping as directed by the City, and the Contractor shall place permanent traffic legends or lane striping at the end of the job or on completion of final paving. When permanent items are placed, they shall be complete markings, legends, or striping i.e.: if limit lines are disturbed, they shall be replaced to centerline or from curb to curb, whichever was existing; if a letter in a word is removed or covered, the entire word shall be replaced; and lane striping shall extend 75 feet beyond construction limits. All replacement markings, legends, or striping required to be replaced beyond the contract limits shown shall be at the cost of the Contractor and shall meet City standards. If existing striping or legends are to be removed on existing surfaces, they shall be sandblasted. Painting over striping or legends in lieu of removal will not be permitted. Pavement striping shall comply with the applicable provisions of Sections 214 and 314 of the Standard Specifications.

Where side streets with existing striping, markings and markers are encountered, striping, markings and markers shall be repainted and replaced for a minimum distance of 15 m (50 feet) from the crosswalk, stop bar or limit line.

314-4.2 Control of Alignment and Layout.

314-4.2.1 General. - Delete and replace with t*he following:*
The Contractor will be responsible for all layout of all striping. All striping, markings and markers shall be reinstalled in their existing locations unless otherwise shown on the plans. The Contractor shall be responsible to take appropriate measures and record the existing locations.

The Contractor shall verify all dimensions in the field prior to installation of pavement striping/marking layout (Cat-Track). Should field measurements differ from the plan, the Contractor shall immediately notify City staff. No Cat-Track marks shall be placed until discrepancies are resolved.

Cat-Track must be approved by City staff prior to the installation of permanent pavement striping/marking. Contractor shall notify City staff a minimum of 24 hours prior to installation of permanent pavement striping/marking to allow for inspection and approval. If approval of Cat-Track is not obtained by the Contractor, all work required to correct the striping/marking will be at the expense of the Contractor

Cat-Track marks shall be made in chalk. Paint for the purpose of Cat-Track is prohibited. If paint is used, the Contractor must remove the paint without damaging or visually deforming the pavement surface. If damage or visual deformity within the removal area occurs, in the opinion of City staff, the Contractor shall grind and overlay the entire segment with no additional compensation. The area of the grind and overlay shall be as required by City staff and shall be a minimum of 0.10' thickness.

All visible Cat-Track markings after the installation of the permanent striping/marking shall be removed without damage or visual deformity to the pavement surface. Any damage or visual deformity to the pavement shall be remedied as noted above.

314-4.3.5 Application. - *Amend the first sentence in paragraph 8 as follows:*
"Glass beads shall be applied at a rate of 0.6 to 0.8 kg of beads per liter (5 to 7 pounds of beads per gallon)."

314-6 GREEN BIKE LANE. Green bike lanes shall be installed per plan and conform to the technical specifications included within the contract documents and shall be Streetbond CL or approved equal.

GENERAL REQUIREMENTS

THIS PAGE INTENTIONALLY LEFT BLANK

SECTION 01010

SUMMARY OF WORK

PART 1 - GENERAL

1.1 DESCRIPTION

The work to be performed under this contract shall consist of furnishing all equipment, materials, tools and supplies, and manufactured articles all labor, transportation, and services, including fuel, power, water, and essential communications, to perform all work, or other operations required for the fulfillment of the Contract in strict accordance with the Contract Documents. The work shall be complete, and all work, materials, and services not expressly indicated or called for in the Contract Documents which may be necessary for the complete and proper construction of the work in good faith shall be provided by the CONTRACTOR as though originally so indicated, at no increase in cost to the CITY of Redlands (Agency/OWNER).

1.2 DEFINITIONS APPLICABLE TO TECHNICAL SPECIFICATIONS

The following words have the meaning defined in the Technical Portions of the work:

A. Indicated - A word used to direct the CONTRACTOR to information contained on the drawings or in the specifications. Terms such as “shown” “noted” “scheduled” and “specified” also may be used to assist in locating information but no limitation of location is implied or intended.

B. Furnish - To supply and deliver to the site, to unload and unpack and install.

C. Install - Defines operations at the site including assembly, erection, placing, anchoring, applying, shaping to dimension, finishing, curing, protecting, testing, startup, and cleaning, ready for the CITY’s use.

D. Provide - Furnish and install, ready for the intended use.

E. Installer - A person or firm engaged by the CONTRACTOR or its subcontract or any subcontractor for the performance of installation, erection, or application work at the site. Installers must be expert in the operations they are engaged to perform.

F. OWNER, CITY, or Agency – City of Redlands.

G. ENGINEER – Richard Brady & Associates, Inc. (BRADY)

1.3 CONTRACT DOCUMENTS

A. The Contract requires, but is not limited to, completion of all work in accordance with the Contract Documents and in conjunction with the following: Standard Specifications for Public Works Construction (SSPWC), 2018 Edition; Standard Plans for Public Works Construction, 2012 Edition; Municipal Utilities and Engineering Department’s (MUED) Water Systems Standard Specifications and

Sanitary Sewer Systems Standard Specifications, latest editions, and General Permit Conditions and Trench Specifications.

B. Cross References to portions of the specifications is made for clarifications only, and lack of such references shall not limit the enforcement of all applicable specifications.

C. The Contract documents are complementary, and what is required by one shall be binding as if required by all, in accordance with the order of precedence set forth herein. The intention of the Documents is to include all labor, materials, equipment, services, and other items necessary for the proper execution and completion of the work. Unless otherwise specifically noted, the CONTRACTOR shall provide and pay for all labor, materials, equipment, services, tools, construction equipment and machinery, utilities, transportation, and other facilities and services including temporary piping, pumping, power generating, dewatering equipment, decommissioning, and all other equipment, materials and labor necessary for the proper execution and completion of the work.

D. The organization of the specifications into divisions, sections, parts, and paragraphs, and the arrangement of drawings shall not control the CONTRACTOR in dividing the work among subcontractors or in establishing the extent of work to be performed by any trade.

E. The Contract Drawings are diagrammatic and indicate the general arrangement of systems and work included in the Contract. The CONTRACTOR shall field verify all dimensions. Do not scale the drawings. The civil, structural, mechanical, electrical and instrumentation drawings and details shall be consulted in connection with the mechanical installations. Where the exact locations of fixtures and equipment are not definitely established, the CONTRACTOR shall field verify and shall confirm his information with the ENGINEER. The CONTRACTOR shall follow the Contract Drawings in laying out the work and shall continually check the various trades to verify that sufficient space is available for the installation of the work. Maximum headroom and space conditions shall be maintained at all points. Where headroom and space conditions appear inadequate, the ENGINEER shall be notified before proceeding with installations.

Because of the small scale of the drawings, it is not possible to indicate all offsets, fittings, and accessories which may be required. The CONTRACTOR shall carefully investigate the structural and finish conditions affecting his work including existing materials and dimensions and shall arrange his work accordingly, furnishing such formwork, structural members, fittings, valves, transitions, pull or junction boxes, and accessories as may be required to meet such conditions, at no additional cost to the CITY.

The Contract Drawings and specifications are intended to be fully cooperative and to agree but should any discrepancy or apparent differences between plans and specifications come to the attention of the CONTRACTOR, or should errors of other affect the work, the CONTRACTOR shall notify the ENGINEER immediately. If the CONTRACTOR is aware the work is affected and proceeds with the work without instructions from the ENGINEER, the CONTRACTOR shall make good any resultant damage or defects. All questions regarding the interpretation of plans and specifications shall be clarified by the ENGINEER whose decision shall be final. Any

work called for by the plans which are not mentioned in the specifications, or vice versa, is to be furnished as though fully set forth by both. Where not specifically stated otherwise, all work and materials necessary for each unit of construction, including special construction for any specific brand or shape of materials called for, even though only briefly mentioned or indicated, shall be furnished and installed fully and completely as part of this Contract. Unless otherwise specified, the CONTRACTOR shall furnish all labor, materials, tools, equipment, and incidentals, and do all the work involved in performing the Contract.

Bidders shall read each and every clause of the specifications, examine the drawings, and shall satisfy themselves by personal investigation of the site as to local conditions including the locations of utilities and other structures. Information derived from record plans, specifications, drawings, or from the ENGINEER or his assistants should be regarded as approximate only and should be approached with caution. A report of geotechnical investigation has been included with the contract documents and is available for review at the CITY'S Municipal Utilities & Engineering Department. The Bidder shall determine the actual conditions and requirements of the work, the character and amount of all classes of labor and materials that may be required, and all circumstances and conditions that may affect the cost of the work. The Bidder in the bid shall include prices, any and all expenses and costs that may be necessary to complete the project in accord with the requirements of the Contract.

1.4 WORK BY OTHERS

A. The CONTRACTOR'S attention is directed to the fact that work may be conducted at or adjacent to the site by other Contractors during the performance of the Work under this Contract. The CONTRACTOR shall conduct his operations so as to cause a minimum of interference with the work of such other Contractors, and shall cooperate fully with such Contractors to provide continued safe access to their respective portions of the site, as required to perform work under their respective contracts.

B. Interference with Work on Utilities: The CONTRACTOR shall cooperate fully with all utility forces of the CITY or forces of other public or private agencies engaged in the relocation, altering, or otherwise rearranging of any facilities which interfere with the progress of the work, and shall schedule the Work so as to minimize interference with said relocation, altering, or other rearranging of facilities.

C. The CONTRACTOR shall coordinate his work so as to not interfere with the CITY or forces of other public or private agencies engaged in the operations or maintenance adjacent facilities in the area. Connections to other facilities shall be coordinated in advance to ensure only short duration interruptions of facilities.

D. The CITY has pre-purchased diesel fueled standby generators to be installed by the CONTRACTOR under this contract at each of the pump stations sites as shown. The CONTRACTOR shall coordinate with the generators supplier as required and provide the necessary cranes and other equipment and prepare the area to receive and unload the generators from the suppliers delivery vehicles at each site. Following unloading and acceptance, the CONTRACTOR shall be deemed to be responsible for protection of the equipment until installed and tested by the CONTRACTOR, and accepted by the CITY. The generator supplier shall also

provide pre-startup assistance, NFPA 100 4-hour load testing, and onsite training to the CONTRACTOR as included in the purchase contract with the CITY. The CONTRACTOR shall coordinate these services to ensure that the CITY receives these services and the training for its personnel. The CITY shall coordinate with AQMD for permits to test, startup, and operate the generators.

1.5 WORK COVERED BY CONTRACT DOCUMENTS

A. The work of the project generally includes, but is not limited to, furnishing all products, labor, materials, equipment, transportation, and incidental services to retrofit and install emergency diesel generators previously purchased separately by the CITY and as indicated on the Contract Documents, summarized in the table below, and comprised of the following major elements:

Location	Generator Size (kW)
Agate Street	650
Country Club	500
Fifth Avenue	500
Texas Street	2 @ 400

1. The Work shall consist of retrofitting and installing CITY procured diesel generators at four pump station sites. The Work will include but is not limited to construction survey; potholing, utility location and verification (excavating, exposing, and verifying top, bottom, and side of utility facilities); trench shoring, sheeting and bracing; earthwork (including over-excavation, trenching, shoring, sloping, bedding, and backfilling including select imported material or select native material); compacting; protecting in place or removing and replacing all existing utilities, and public and private improvements; touch-up of damaged coatings; commissioning; civil site improvements, structural generator slabs and anchorage, electrical and instrumentation improvements, disposing of excess soil and rock material and restoring all areas and improvements to pre-construction conditions.

2. Retrofitting of purchased generators via Caterpillar's authorized distributor by procuring and installing selected Johnson Matthey diesel particulate filter (DPF) and SootAlert Module as described in the submittal package in Appendix I, or approved equal, on each of the CITY procured generators.

3. Coordination with the CITY'S Municipal Utilities and Engineering Department.

4. The CONTRACTOR shall, upon completion of the work required herein, initially operate all components of the Contract Work furnished and installed by CONTRACTOR, coordinate with the generator manufacturer's representative and make any additional adjustments, corrections, repairs, replacements, and reconstructions necessary to provide the CITY with complete, correctly operating diesel generator systems and appurtenances.

5. The CONTRACTOR shall, upon completion of the work required herein, provide operation and maintenance information to the CITY for all components of Contract Work furnished and installed by CONTRACTOR.

6. The approved CITY procured generator shop drawings are included in Appendix H.

B. This section describes an overall summary of the work to be performed under this Contract, the responsibilities of the CONTRACTOR, and their relation to the CITY. It is for general information only and shall, in no case, supersede the requirements of the remainder of these specifications or the other Contract Documents.

1.6 SEQUENCE AND PROGRESS OF WORK

A. Sequence of Work shall be as specified herein and in Section 01115 Construction Sequence. The CONTRACTOR shall submit a Progress Schedule covering the entire Work in accordance with Section 01321 Construction Schedule. Prior to any demolition or construction activities, the CONTRACTOR shall submit a construction phasing plan for ENGINEER'S review and approval prior to commencing work. The phasing plan shall identify utility shutdown requirements for the CITY as well as other agencies, coordination with the power company, phone company, and all other utility companies; and all other major milestone activities and environmental compliance requirements.

B. The ENGINEER shall be advised of environmental restrictions that may affect project Sequence and Progress of Work.

1.7 STORMWATER POLLUTION PROGRAM

CONTRACTOR shall comply with the requirements of the San Bernardino County Storm Water Program – Construction Run-Off Manual. The CONTRACTOR, prior to beginning any construction activities, shall have all Best Management Practices (BMP's) required by this manual in place. The CONTRACTOR shall comply with the requirements stated in Section 01572 - Erosion Control Plan and within the Water Pollution Control Notes as shown on the contract drawings, including submittal of an Erosion / Sediment Control Plan to the CITY for approval. The CONTRACTOR shall be responsible for maintaining all of these BMP's throughout the construction period.

1.8 ENVIRONMENTAL PROVISIONS

A. The following mitigation measures are required by the CONTRACTOR as part of the Project:

1. CONTRACTOR shall operate all construction equipment, and any electrical generator(s) for construction activities in accordance with SCAQMD rules and regulations.

2. CONTRACTOR shall comply with all CITY policies pertaining to short term construction emissions, including periodic watering of the site and prohibiting grading during second stage smog alerts and when wind velocities exceed 15 miles per hour.

3. CONTRACTOR'S grading operations shall be conducted in compliance with SCAQMD Rule 403 (Fugitive Dust).

4. CONTRACTOR shall implement dust control measures during site disturbance activity, including, for example, regular watering in accordance with SCAQMD Rule 403.

5. In case of an accidental discovery of historical or unique archaeological resources, the CONTRACTOR shall immediately halt construction activity and promptly notify the CITY of the discovery. The CITY shall then retain a qualified archaeologist to evaluate the discovery. If the find is determined to be a unique historical or archaeological resource, appropriate protection and preservation measures shall be taken in accordance with Section 15064.5 of the California Environmental Quality Act (CEQA) and Public Resources Code Section 21082.

B. The cost for complying with the mitigation measures listed above shall be included in the appurtenant items of the Bid Proposal items for each site and no additional compensation shall be allowed.

1.9 TRAFFIC ACCESS

The CONTRACTOR shall perform all operations so that public traffic is maintained (traffic access to all local streets throughout construction). Closing of CITY Streets (including temporary closures) will not be permitted by the CITY.

1.10 POWER AND TELEPHONE SERVICE

The CONTRACTOR is responsible for coordinating power and telephone service to the project site as required, and all installing of conduit, pull rope, transformer slab box, and other required project elements in accordance with the governing utilities requirements. The work may require abandonment of existing power, telephone, and cable TV services. The CONTRACTOR is responsible for the abandonment of these facilities, including coordination with the utility companies.

1.11 CONTRACTOR YARD

The CONTRACTOR shall coordinate with CITY for laydown yard location and extents.

1.12 GROUNDWATER

Groundwater is not anticipated on this site. However, if groundwater is found or saturated soil conditions occur in excavations, the CONTRACTOR shall make provisions as required for handling and disposing of groundwater.

1.13 SURVEYS

The CONTRACTOR is responsible for conducting all surveys necessary to construct the project. The cost of all survey work will be included in the CONTRACTOR'S bid proposal for the project.

1.14 MATERIAL TESTING

The CONTRACTOR shall provide material testing as directed by the CITY. Material testing services shall be prepared by a lab pre-approved by the CITY. Material testing shall

compaction of select material, structure backfill, trench and subgrade compaction, concrete compressive strength, masonry grout compressive strength, and pavement compaction.

1.15 PROJECT MEETINGS

A. Preconstruction Conference:

1. Fifteen days prior to the commencement of Work, a preconstruction conference will be held at the CITY and shall be attended by the CONTRACTOR'S Project Manager, his Superintendent, and his subcontractors as the CONTRACTOR deems appropriate.

2. Unless previously submitted to the ENGINEER, the CONTRACTOR shall bring to the conference a copy of each of the following:

a. Procurement schedule of major equipment and materials and items requiring long lead time

b. Shop Drawing/Sample submittal schedule

c. Preliminary schedule of values (lump sum price breakdown) for progress payment purposes

d. Sequence of Construction Plan

3. The purpose of the conference is to designate responsible personnel, establish a working relationship and to clarify communication protocol between the CITY and the CONTRACTOR. Matters requiring coordination will be discussed and procedures for handling such matters established. The complete agenda will be furnished to the CONTRACTOR prior to the meeting date. However, the CONTRACTOR shall be prepared to discuss all of the items listed below.

a. Community relations

b. CONTRACTOR'S tentative schedules

c. Transmittal, review, and distribution of CONTRACTOR'S submittals

d. Processing applications for payment

e. Maintaining record documents

f. Critical work sequencing

g. Delivery schedule for long lead time items

h. Connections to existing facilities and shutdown coordination

i. Field decisions and change orders

j. Use of project site, office and storage areas, security, housekeeping, and CITY'S needs

k. Major equipment deliveries and priorities

l. Equipment access to site

m. Storm water pollution prevention

n. Site maintenance and cleanliness

4. The CITY will preside over the preconstruction conference and will arrange for the keeping and distribution of minutes to all persons in attendance. Attendance by the CONTRACTOR is mandatory.

5. The CITY will conduct weekly or bi-weekly construction progress meetings. Attendance by the CONTRACTOR or his representative (Superintendent) and all subcontractors actively engaged in work on the site is mandatory. The minutes of such meetings will be distributed for comments.

PART 2 – PRODUCTS (Not Used)

PART 3 – EXECUTION (Not Used)

*** END OF SECTION ***

SECTION 01115

CONSTRUCTION SEQUENCE

PART 1 - GENERAL

1.1 WORK OF THIS SECTION

A. The CONTRACTOR shall participate in regularly scheduled meetings to develop and implement the work described herein, and for all other work items that affect CITY operations.

B. The CONTRACTOR shall take the necessary precautions to assure that no damage or unscheduled shutdowns occur to any facilities, including piping, utilities, roads, and structures, that are to remain in operation and are not to be modified or replaced. It is the CONTRACTOR'S responsibility to contact Underground Service Alert (dial 811) prior to any excavation for verification and location of utilities and notification of commencement of Work. Any temporary facilities, materials, equipment and labor required to achieve this objective shall be provided by the CONTRACTOR at his own expense. At the completion of Work, all such temporary facilities, materials and equipment remaining shall be removed from the site.

C. CONTRACTOR shall perform all construction activities so as to avoid interference with operations of the CITY facilities and the work of others.

D. CONTRACTOR shall provide potholing for locating and field verifying all existing piping, electrical and communications conduits, structures and equipment affected by the Work. All potholing shall be performed by the CONTRACTOR at no additional cost to the CITY. Delays in the Work, as a result of insufficient potholing, will be solely the CONTRACTOR'S responsibility. No time extensions will be allowed for Work that is delayed as a result of insufficient potholing and field verification.

E. Perform all construction necessary to complete connections and tie-ins to existing facilities under CITY supervision.

1.2 DEFINITIONS

A. Owner, City or Agency - City of Redlands.

B. Engineer - Richard Brady & Associates.

1.3 RELATED SECTIONS

A. The work of the following sections applies to the work of this section. Work of other sections of the Specifications, not referenced below, shall also apply to the extent required for proper performance of this work.

1. 01010 Summary of Work

2. 01115 Construction Sequence
3. 01321 Construction Schedule
4. 01330 Submittals

1.4 CONTRACTOR SUBMITTALS

A. The CONTRACTOR shall furnish submittals in accordance with the contract drawing requirements, specific requirements in each specification section, and Specification 01330 Submittals.

1.5 SEQUENCING AND OPERATIONS

A. Work under the Contract shall be scheduled and performed in such a manner as to result in the least possible disruption to the operation of the existing CITY facilities including the existing pump stations, water distribution system and associated components, and the day-to-day activities of the CITY Operations and Maintenance staff. The CITY operations in and around the project sites include, but are not limited to, ingress/egress of CITY maintenance vehicles, delivery/pick-up of materials by outside vendors, CITY staff access to facilities, storage and parking areas, etc. The CONTRACTOR must maintain accessibility to the CITY owned areas to allow system operations at all times. The CONTRACTOR shall schedule his activities to avoid potential conflicts with normal traffic in the project area.

B. The CITY'S water delivery commitments shall take precedence over all construction activities. Facilities and utility shutdowns shall therefore be scheduled to permit the CITY to meet all water delivery commitments. The CITY shall be the sole judge of the ability to temporarily remove facilities from service, while concurrently maintaining adequate water services. The CITY has the right to approve or disapprove all requests by the CONTRACTOR for facility shutdowns. At any time, the CITY has the right to cancel all previously approved shutdowns if the CITY deems that due to delivery requirements, the facilities must remain in operation. If previously approved shutdowns are canceled by the CITY within three (3) working days of the planned shutdown date, then costs for demobilization and remobilization will be paid to the CONTRACTOR.

C. Unless otherwise approved by the CITY, the Work shall be confined to the areas within the fenced individual pump station sites, as shown on the Drawings. Any deviation from these limits shall be submitted for review by the CITY a minimum of fourteen (14) calendar days in advance of the requested change. CONTRACTOR shall submit the requested change(s) with a map and description in accordance with Section 01300 – Submittals.

D. Modifications to existing electrical systems, including installation of new conduit, wires, and electrical equipment will be necessary to complete the work. Electrical shutdowns shall be planned and notice provided to the City a minimum of 7 calendar days prior to the shutdown and coordinated with the City a minimum of 48 hours prior to the shutdown. Shutdowns shall only occur between 9:00 AM and 5:00 PM on a Tuesday, Wednesday, or Thursday. The shutdown time will be measured from the time the power is deactivated by the CITY. In no case shall shutdowns be allowed without prior notice to the City.

E. The Work shall be performed in such order or precedence as may be found necessary by the CONTRACTOR to expedite the completion of the project with due consideration for CITY'S operations. The CITY has the right to change the precedence of Work as needed to maintain the CITY'S operation.

F. Work in multiple areas of the Project may be allowed provided they do not cause undue disruption to CITY facilities or operations. The CITY reserves the sole right to approve or disapprove all requests by the CONTRACTOR for work in multiple areas or changes to the approved construction sequence. Disapproval of a request shall not constitute the basis for a change in the bid price.

G. All new electrical equipment must be in place and operational before making connections to existing electrical equipment or power. All Work required for electrical switchovers must be accomplished during the allotted period of time as approved in advance by the City.

H. All existing automatic and manual control systems and all recording and indicating instruments shall be maintained in continuous operation for the entire construction period. The CONTRACTOR shall supply any temporary wiring, instrumentation, or other facilities necessary to maintain continuous operation.

I. The CONTRACTOR shall determine if temporary wiring, or other facilities must be constructed to bypass certain electrical processes while modifications are being made to permanent facilities. The CONTRACTOR shall submit for review by the CITY a complete detailed design signed and sealed by a California Professional Engineer of the proposed temporary facilities including a complete written description and drawings and expected duration of time that temporary facilities will be in service. The CITY shall have the authority to require any modifications at any time to the proposed temporary facilities which is deemed necessary by the CITY to maintain proper and reliable operations.

   a. The CONTRACTOR shall design and provide temporary power and controls for both pump stations at the 5th Avenue Project Site. All pumps at each pump station shall remain in service at all times throughout the duration of construction. The CONTRACTOR shall coordinate with Southern California Edison (SCE) to provide the required temporary power to the site, generator service is not acceptable. The CONTRACTOR shall submit for review by the CITY a complete detailed design signed and sealed by a California Professional Engineer of the proposed temporary facilities including a complete written description and drawings and expected duration of time that temporary facilities will be in service. The CITY shall have the authority to require any modifications at any time to the proposed temporary facilities which is deemed necessary by the CITY to maintain proper and reliable operations.

J. The CONTRACTOR shall maintain utilities serviceable, functional and operational at all times. The CONTRACTOR shall provide all necessary temporary support, conduit, wiring, piping and other facilities required to maintain these services at his own expense. All temporary and permanent utilities shall be in accordance with governing Utility requirements.

K. The CONTRACTOR shall maintain operation of all CITY security features (i.e., perimeter security fencing, cameras, etc.) at all times throughout the duration of the project. All area lighting, fencing, and other security measures must be continuously maintained. The CONTRACTOR shall provide all additional necessary utilities, facilities, or watchmen that are required to maintain the security of the project site and adjacent areas. At any time that the perimeter security fencing of a CITY facility is breached for whatever reason (e.g., temporary removal to accommodate new construction or access, etc.), the CONTRACTOR shall provide a uniformed guard service at the project site twenty-four (24) hours a day, seven (7) days a week, until such time the fence has been reinstalled and all security measures (motion detection, cameras, etc.) are operational.

L. The CONTRACTOR shall maintain all existing CITY water system facilities in service at all times until notice of completion and acceptance of the Work. The CONTRACTOR shall provide all temporary equipment, power, and control as necessary when working on the facility site to maintain uninterrupted operations.

M. All operations of existing valves and gates required for the Work shall be done by the CITY. No valve or other item of equipment shall be operated without the CITY'S knowledge.

1.6 CONSTRUCTION SEQUENCE

A. The CONTRACTOR shall develop a detailed construction schedule that outlines the CONTRACTOR'S proposed construction sequence, including each major project element. The construction constraints and requirements described in this Section must be used as a guideline in preparing the schedule. At the sole discretion of the ENGINEER and the CITY, deviation from the suggested construction sequence described in this Section is permitted if techniques and methods known to the CONTRACTOR will result in reducing the disruption of the facility operation and is concurred with the ENGINEER and the CITY. The preliminary schedule shall be submitted to the CITY for review and approval in accordance with Section 01321 - Construction Schedule.

B. The construction schedule for each project site shall cover, at a minimum, the following suggested construction sequence, and include the start and end dates for each of the listed project elements and any necessary sub-elements:

1. Generator Diesel Particulate Filter (DPF) retrofit Via Caterpillar Distributor
2. Generator Anchorage Designs.
3. Submittals and Shop Drawings.
4. Permitting.
5. Site Mobilization / Demobilization.
6. Storm Water Pollution Prevention and Implementation / Maintenance.
7. Construction Survey and Confirm Survey Datum.
8. Potholing and Utility Locate / Verification.
9. Trench Shoring, Sheeting and Bracing.
10. Site Over-Excavation.
11. Furnish, Install and Placement of Site Structural Fill.

12. Electrical Conduit Installation.
13. Civil / Structural Site Improvements.
14. Generator Foundation Construction.
15. Generator Delivery
16. Generator Installation.
17. Electrical Power, Wiring, Instrumentation and Controls.
18. Final Acceptance Testing, Commissioning, and Issuance of AQMD Permit to Operate.
19. Contract Closeout Requirements.

1.7 SEQUENCE OF CONSTRUCTION PLAN

A. The CONTRACTOR shall submit to the CITY a written Sequence of Construction (SOC) Plan. Any Work requiring a plant, pipeline, process, or electrical shutdown can only be attempted after the approval of scheduled SOC Plan activities.

B. The CONTRACTOR shall develop a detailed description for each SOC Plan event, including any required shutdown or outage activity. The construction constraints and requirements described in this Section must be used as a guideline in preparing the SOC Plan. The detailed plan shall describe the CONTRACTOR'S length of time required to complete the temporary power, controls, instrumentation or alarms required to maintain control, and the labor, materials, and equipment which the CONTRACTOR shall provide to ensure proper operation of the affected facilities. The detailed SOC Plan and corresponding construction schedule shall be submitted to the CITY for review at least thirty (30) calendar days before Work begins.

C. Materials, equipment and tools necessary to complete any required shutdown or outage activity shall be on-site and verified by the CITY seven (7) calendar days prior to the start of the SOC Plan event. The CONTRACTOR, at his/her own expense, shall provide temporary power supply and/or generators whenever and wherever necessary to ensure a continuous power supply to all plant facilities.

D. No Work relating to shutdowns of facilities will be allowed until all new equipment have approved shop drawings and have been delivered to the project site. All stored materials to be utilized in the SOC Plan activity Work shall be approved by the CITY prior to installation.

E. The CONTRACTOR shall notify the CITY in writing at least seven (7) calendar days in advance of any required shutdown or outage if the schedule for performing the Work has changed or if revisions to the SOC Plan are required.

F. The SOC Plan shall describe the CONTRACTOR'S contingency plan for each plan event that shall be initiated in the event that the temporary facilities fail or it becomes apparent that the time constraints cannot be met. The contingency plan shall conform to all specified outage requirements. All costs for preparing and implementing SOC and contingency plans shall be borne by the CONTRACTOR.

1.8 INVESTIGATION OF EXISTING FACILITIES AND UTILITIES

A. The CONTRACTOR'S attention is directed to the connections to existing electrical and instrumentation systems that are required for this project. All work described in this Section must be reflected in the CONTRACTOR'S original lump sum bid amount for each project site. This work includes, but is not limited to, the work identified above, and miscellaneous other facilities including all civil, structural, electrical, and instrumentation improvements.

PART 2 -- PRODUCTS (Not Used)

PART 3 -- EXECUTION

3.1 EXAMINATION

A. Based on previous site visits, and pre-bid research and knowledge, CONTRACTOR has become aware of existing conditions that may affect the sequencing of the Work, and provision are included in the bid price for same.

END OF SECTION

SECTION 01200

MEASUREMENT AND PAYMENT

PART 1 – GENERAL

1.1 REQUIREMENT

A. Work Listed in the Schedule of Work Items

1. The application for payment will be for a specific item based on the percentage completed or quantity installed. The percentage complete will be based on the value of the partially completed work relative to the value of the item when entirely completed and ready for service.

2. A retention of five percent (5%) of the value of the work completed will be withheld from progress payments. This retention amount will remain constant throughout the contract period and will not be payable until the expiration of thirty-five (35) days after the recordation of the Notice of Completion.

B. Work Not Listed in the Schedule of Work Items

1. The General Conditions and items in the General Requirements, and Specifications which are not listed in the schedule of work items of the bid form are, in general, applicable to more than one listed work item, and no separate work item is provided, therefore. Include the cost of work not listed but necessary to complete the project designated in the contract documents in the various listed work items of the bid form.

2. The bids for the work are intended to establish the total cost for the work in its entirety. Should the CONTRACTOR feel that the cost for the work has not been established by specific items in the bid form, include the cost for that work in some related bid item so that the proposal for the project reflects the total cost for completing the work in its entirety.

3. The CONTRACTOR may experience difficulty in excavation due to rock or unsuitable backfill material throughout the project locations. It shall be the CONTRACTOR'S responsibility to identify these areas and account for difficulty in excavation, the need to export rock or unsuitable backfill material and the need to import suitable backfill material. There will not be additional contract time or additional compensation for any project locations where any of these circumstances occur.

C. Bid Items

1. COUNTRY CLUB PUMP STATION SITE (CC):

1.1. Mobilization/Demobilization, Bid Item 1.1:

Payment for Mobilization/Demobilization shall be made at the contract lump sum price and shall constitute full compensation for mobilization and demobilization. The bid price shall include, but not be limited to, preliminary construction schedule, sequence of construction (SOC) plan, bonds, insurance, permit fees, installation and relocation of information signs, shop drawings, catalog submittals, moving off of jobsite all CONTRACTOR'S equipment, material and facilities, removal of all waste and debris, cleanup, preparation of record as-built drawings, and completion of all contract closeout requirements. The bid price shall include, but not be limited to, all labor, material, equipment, and incidentals required for execution of this bid item noted within Section 01721 - Mobilization and 01740 - Demobilization.

Payment of the Mobilization/Demobilization shall be made based on 5 percent of the Item 2 Base Bid Total Price and shall be made in two separate payment applications to ensure compliance with all requirements. The first shall be made with the first payment application, and the second shall be made with the last and final payment application after 100% of work is completed and accepted by the City. Mobilization shall constitute 4% of the Item 2 Base Bid Total Price and Demobilization shall constitute 1% of the Item 2 Base Bid Total Price. The completeness shall be determined by the ENGINEER and updated on progress payments.

1.2. Demolition, Bid Item 1.2:

Payment for Demolition shall be made at the contract lump sum price and shall constitute full compensation for demolition work. The bid price shall include, but not be limited to, clearing and grubbing at proposed generator and enclosure wall location, removal of portion of existing AC curb, sawcut and removal of portion of existing asphalt pavement, removal of existing irrigation system, and removal of existing reservoir level sensing line, including capping sensing line connection to water main and legal disposal. The bid price shall include, but not be limited to, all labor, material, equipment, and incidentals required for execution of this bid item.

Payment for the Demolition work shall be made based on the percentage of project completion to ensure compliance with all requirements throughout the duration of the contract. The completeness shall be determined by the ENGINEER and updated on progress payments.

1.3. Civil / Structural, Bid Item 1.3:

Payment for Civil / Structural shall be made at the contract lump sum price and shall constitute full compensation for civil / structural work. The bid price shall include, but not be limited to, development of traffic control plans to be submitted to the City for approval prior to the scheduled commencement of work, existing site conditions and utility research, construction survey related tasks noted within Section 01722 – Surveying, potholing and utility locate/verification related tasks noted within Section 01732 – Potholing, Trench Shoring, Sheeting, and Bracing related tasks in accordance with Subsections 5-7.2 "Safety Orders," and 306-4, "Shoring and Bracing" of the SSPWC; and State of California Division of Occupational Safety and Health (Cal/OSHA) Construction Safety Orders, all work required to provide for receiving, storage, and installation of Owner furnished

generators, generator slab, generator anchorage, CMU encloser wall, required grading, over-excavation, backfill, compaction, and asphalt pavement and curb replacement, as shown on the contract drawings, and as indicated in the contract specifications. Bid price shall include coordinating generator delivery to project site with Owner furnished generator supplier, and unloading of generator onsite. Bid price shall include completely filling the generator's fuel tank with diesel one time, for use during startup and testing. The bid price shall include all labor, materials, equipment, and incidentals required for execution of this bid item.

Payment for the Civil / Structural work shall be made based on the percentage of project completion to ensure compliance with all requirements throughout the duration of the contract. The completeness shall be determined by the ENGINEER and updated on progress payments.

1.4. Electrical / Instrumentation, Bid Item 1.4:

Payment for Electrical / Instrumentation shall be made at the contract lump sum price and shall constitute full compensation for all electrical / instrumentation work. The bid price shall include, but not be limited to, all work required to provide for installation the Owner furnished generator; and automatic transfer switch, electrical and communications conduit and wiring, instrumentation and controls, generator start-up, and acceptance testing including final AQMD Permit to Operate, complete in place as shown on the contract drawings and as indicated in the contract specifications. The bid price shall include all labor, material, equipment, and incidentals required for execution of this bid item.

Payment for the Electrical / Instrumentation work shall be made based on the percentage of project completion to ensure compliance with all requirements throughout the duration of the contract. The completeness shall be determined by the ENGINEER and updated on progress payments.

1.5. Generator Diesel Particulate Filter Retrofit, Bid Item 1.5:

Payment for Diesel Particulate Filter Retrofit shall be made at the contract lump sum price and shall constitute full compensation for all diesel particulate filter retrofit work. The bid price shall include, but not be limited to, all work required to coordinate with authorized Caterpillar distributor to procure and install selected Johnson Matthey JM-CRT(+)-3-N-CS-BITO-10/10-LP passive diesel particulate filter on Owner furnished generator to satisfy AQMD requirements and SootAlert Module (Datalogger and Monitor). The equipment shall meet the requirements of the product submittal provided in Appendix I, or approved by the authorized Caterpillar distributor as equal. Diesel particulate filter and datalogger and monitor shall be supplied and installed by a manufacturer's approved distributor in accordance with manufacturer's installation guidelines as to not void or otherwise affect the generator warranty. If it is determined by the authorized Caterpillar Distributor that modifications to the generator enclosure or that a standalone structure is required to support the selected diesel particulate filter, the Contractor shall prepare shop drawing and calculations for the modifications, support framing and all necessary anchorage, which shall be designed, stamped, and signed by a California licensed Structural Engineer, submitted to the ENGINEER for approval prior to fabrication and installation. The bid price shall include all

coordination, transportation, shipping, labor, materials, equipment, and incidentals required for execution of this bid item.

1.6. Landscape, Bid Item 1.6:

Payment for Landscape shall be made at the contract lump sum price and shall constitute full compensation for all landscape work. The bid price shall include, but not be limited to, all work required to provide for installation of relocated valve box with new irrigation control valve, reconnection to existing irrigation systems, new irrigation equipment, and screening shrubs, as shown on the contract drawings, and as indicated in the contract specifications. The bid price shall include all labor, materials, equipment, and incidentals required for execution of this bid item.

Payment for the Landscape work shall be made based on the percentage of project completion to ensure compliance with all requirements throughout the duration of the contract. The completeness shall be determined by the ENGINEER and updated on progress payments.

1.7. Best Management Practices, Bid Item 1.7:

Payment for Best Management Practices shall be made at the contract lump sum price and shall constitute full compensation for complying with the required water pollution control measures. The bid price shall include, but not be limited to, all labor, material, equipment, and incidentals required for execution of this bid item noted within Section 01572 - Erosion Control Plan and within the Water Pollution Control Notes as shown on the contract drawings, including submittal of an Erosion / Sediment Control Plan to the City for approval.

Payment for the Stormwater Pollution Prevention and Implementation/Maintenance shall be made based on the percentage of project completion to ensure compliance with all requirements. The completeness shall be determined by the ENGINEER and updated on progress payments.

1.8. Unforeseen Work Not Covered Within All Other Bid Items, Bid Item 1.8:

Payment for Unforeseen Work Not Covered Within All Other Bid Items shall be made for change orders or field orders related to the improvements as may be deemed necessary and approved by the City.

2. <u>AGATE PUMP STATION SITE (AG):</u>

2.1. Mobilization/Demobilization, Bid Item 2.1:

Payment for Mobilization/Demobilization shall be made at the contract lump sum price and shall constitute full compensation for mobilization and demobilization. The bid price shall include, but not be limited to, preliminary construction schedule, sequence of construction (SOC) plan, bonds, insurance, permit fees, installation and relocation of information signs, shop drawings, catalog submittals, moving off of jobsite all CONTRACTOR'S equipment, material and facilities, removal of all waste and debris, cleanup, preparation of record as-built drawings, and completion of all contract closeout requirements. The bid price shall include, but not be limited to, all labor, material, equipment, and incidentals required for

execution of this bid item noted within Section 01721 - Mobilization and 01740 - Demobilization.

Payment of the Mobilization/Demobilization shall be made based on 5 percent of the Item 1 Base Bid Total Price and shall be made in two separate payment applications to ensure compliance with all requirements. The first shall be made with the first payment application, and the second shall be made with the last and final payment application after 100% of work is completed and accepted by the City. Mobilization shall constitute 4% of the Item 1 Base Bid Total Price and Demobilization shall constitute 1% of the Item 1 Base Bid Total Price. The completeness shall be determined by the ENGINEER and updated on progress payments.

2.2. Demolition, Bid Item 2.2:

Payment for Demolition shall be made at the contract lump sum price and shall constitute full compensation for demolition work. The bid price shall include, but not be limited to, clearing and grubbing at proposed generator and enclosure wall location, and removal, salvage, or legal disposal of existing generator, tanks, and enclosure. The bid price shall include, but not be limited to, all labor, material, equipment, and incidentals required for execution of this bid item.

Payment for the Demolition work shall be made based on the percentage of project completion to ensure compliance with all requirements throughout the duration of the contract. The completeness shall be determined by the ENGINEER and updated on progress payments.

2.3. Civil / Structural, Bid Item 2.3:

Payment for Civil / Structural shall be made at the contract lump sum price and shall constitute full compensation for civil / structural work. The bid price shall include, but not be limited to, development of traffic control plans to be submitted to the City for approval prior to the scheduled commencement of work, existing site conditions and utility research, construction survey related tasks noted within Section 01722 – Surveying, potholing and utility locate/verification related tasks noted within Section 01732 – Potholing, Trench Shoring, Sheeting, and Bracing related tasks in accordance with Subsections 5-7.2 “Safety Orders," and 306-4, "Shoring and Bracing” of the SSPWC; and State of California Division of Occupational Safety and Health (Cal/OSHA) Construction Safety Orders, all work required to provide for receiving, storage, and installation of Owner furnished generators, generator slab, generator anchorage, CMU enclosure wall, required grading, over-excavation, backfill, and compaction, as shown on the contract drawings, and as indicated in the contract specifications. Bid price shall include coordinating generator delivery to project site with Owner furnished generator supplier, and unloading of generator onsite. Bid price shall include completely filling the generator’s fuel tank with diesel one time, for use during startup and testing. The bid price shall include all labor, materials, equipment, and incidentals required for execution of this bid item.

Payment for the Civil / Structural work shall be made based on the percentage of project completion to ensure compliance with all requirements throughout the

duration of the contract. The completeness shall be determined by the ENGINEER and updated on progress payments.

2.4. Electrical / Instrumentation, Bid Item 2.4:

Payment for Electrical / Instrumentation shall be made at the contract lump sum price and shall constitute full compensation for all electrical / instrumentation work. The bid price shall include, but not be limited to, all work required to provide for installation of the Owner furnished generator; and automatic transfer switch, electrical and communications conduit and wiring, instrumentation and controls, generator start-up, and acceptance testing including final AQMD Permit to Operate, complete in place as shown on the contract drawings and as indicated in the contract specifications. The bid price shall include all labor, material, equipment, and incidentals required for execution of this bid item.

Payment for the Electrical / Instrumentation work shall be made based on the percentage of project completion to ensure compliance with all requirements throughout the duration of the contract. The completeness shall be determined by the ENGINEER and updated on progress payments.

2.5. Generator Diesel Particulate Filter Retrofit, Bid Item 2.5:

Payment for Diesel Particulate Filter Retrofit shall be made at the contract lump sum price and shall constitute full compensation for all diesel particulate filter retrofit work. The bid price shall include, but not be limited to, all work required to coordinate with authorized Caterpillar distributor to procure and install selected Johnson Matthey JM-CRT(+)-5-N-CS-BITO-14/14-RT passive diesel particulate filter on Owner furnished generator to satisfy AQMD requirements and SootAlert Module (Datalogger and Monitor). The equipment shall meet the requirements of the product submittal provided in Appendix I, or approved by the authorized Caterpillar distributor as equal. Diesel particulate filter and datalogger and monitor shall be supplied and installed by a manufacturer's approved distributor in accordance with manufacturer's installation guidelines as to not void or otherwise affect the generator warranty. If it is determined by the authorized Caterpillar Distributor that modifications to the generator enclosure or that a standalone structure is required to support the selected diesel particulate filter, the Contractor shall prepare shop drawing and calculations for the modifications, support framing and all necessary anchorage, which shall be designed, stamped, and signed by a California licensed Structural Engineer, submitted to the ENGINEER for approval prior to fabrication and installation. The bid price shall include all coordination, transportation, shipping, labor, materials, equipment, and incidentals required for execution of this bid item.

2.6. Best Management Practices, Bid Item 2.6:

Payment for Best Management Practices shall be made at the contract lump sum price and shall constitute full compensation for complying with the required water pollution control measures. The bid price shall include, but not be limited to, all labor, material, equipment, and incidentals required for execution of this bid item noted within Section 01572 - Erosion Control Plan and within the Water Pollution Control Notes as shown on the contract drawings, including submittal of an Erosion / Sediment Control Plan to the City for approval.

Payment for the Stormwater Pollution Prevention and Implementation/Maintenance shall be made based on the percentage of project completion to ensure compliance with all requirements. The completeness shall be determined by the ENGINEER and updated on progress payments.

2.7. Unforeseen Work Not Covered Within All Other Bid Items, Bid Item 2.7:

Payment for Unforeseen Work Not Covered Within All Other Bid Items shall be made for change orders or field orders related to the improvements as may be deemed necessary and approved by the City.

3. 5th AVE PUMP STATION SITE (FA):

3.1. Mobilization/Demobilization, Bid Item 3.1:

Payment for Mobilization/Demobilization shall be made at the contract lump sum price and shall constitute full compensation for mobilization and demobilization. The bid price shall include, but not be limited to, preliminary construction schedule, sequence of construction (SOC) plan, bonds, insurance, permit fees, installation and relocation of information signs, shop drawings, catalog submittals, moving off of jobsite all CONTRACTOR'S equipment, material and facilities, removal of all waste and debris, cleanup, record as-built drawings, and completion of all contract closeout requirements. The bid price shall include, but not be limited to, all labor, material, equipment, and incidentals required for execution of this bid item noted within Section 01721 - Mobilization and 01740 - Demobilization.

Payment of the Mobilization/Demobilization shall be made based on 5 percent of the Item 3 Base Bid Total Price and shall be made in two separate payment applications to ensure compliance with all requirements. The first shall be made with the first payment application, and the second shall be made with the last and final payment application after 100% of work is completed and accepted by the City. Mobilization shall constitute 4% of the Item 3 Base Bid Total Price and Demobilization shall constitute 1% of the Item 3 Base Bid Total Price. The completeness shall be determined by the ENGINEER and updated on progress payments.

3.2. Demolition, Bid Item 3.2:

Payment for Demolition shall be made at the contract lump sum price and shall constitute full compensation for demolition work. The bid price shall include, but not be limited to, removal of portion of existing AC curb, sawcut and removal of portion of existing asphalt pavement, removal of existing retaining wall, removal of existing trees, removal of existing electrical service meter/main entrance section switchgear and slab, removal of existing motor control center (MCC), removal of existing pump starter panels, removal of damaged pump station building siding panels, roof panels, and fascia and legal disposal . The bid price shall include, but not be limited to, all labor, material, equipment, and incidentals required for execution of this bid item.

Payment for the Demolition work shall be made based on the percentage of project completion to ensure compliance with all requirements throughout the

duration of the contract. The completeness shall be determined by the ENGINEER and updated on progress payments.

3.3. Civil / Structural, Bid Item 3.3:

Payment for Civil / Structural shall be made at the contract lump sum price and shall constitute full compensation for civil / structural work. The bid price shall include, but not be limited to, development of traffic control plans to be submitted to the City for approval prior to the scheduled commencement of work, existing site conditions and utility research, construction survey related tasks noted within Section 01722 – Surveying, potholing and utility locate/verification related tasks noted within Section 01732 – Potholing, Trench Shoring, Sheeting, and Bracing related tasks in accordance with Subsections 5-7.2 “Safety Orders," and 306-4, "Shoring and Bracing” of the SSPWC; and State of California Division of Occupational Safety and Health (Cal/OSHA) Construction Safety Orders, all work required to provide for receiving, storage, and installation of Owner furnished generators, generator slab, generator anchorage, CMU retaining wall, required grading, over-excavation, backfill, compaction, asphalt pavement, asphalt curb, concrete v-ditch, trench drain, catch basins, PVC storm drain piping, prefabricated stormwater pump station, and removable bollards, as shown on the contract drawings, and as indicated in the contract specifications. Bid price shall include coordinating generator delivery to project site with Owner furnished generator supplier, and unloading of generator onsite. Bid price shall include prefabricated stormwater pump station start-up and acceptance testing. Bid price shall include completely filling the generator’s fuel tank with diesel one time, for use during startup and testing. The bid price shall include all labor, materials, equipment, and incidentals required for execution of this bid item.

Payment for the Civil / Structural work shall be made based on the percentage of project completion to ensure compliance with all requirements throughout the duration of the contract. The completeness shall be determined by the ENGINEER and updated on progress payments.

3.4. Building Retrofit, Bid Item 3.4:

Payment for Building Retrofit shall be made at the contract lump sum price and shall constitute full compensation for all building retrofit work. The bid price shall include, but not be limited to, all work required to provide for installation of roof rod cross braces, wall rod cross braces, roof beams, columns, roof panels, fascia, and wall panels, as shown on the contract drawings, and as indicated in the contract specifications. The bid price shall include all labor, materials, equipment, and incidentals required for execution of this bid item.

Payment for the Building Retrofit work shall be made based on the percentage of project completion to ensure compliance with all requirements throughout the duration of the contract. The completeness shall be determined by the ENGINEER and updated on progress payments.

3.5. Electrical / Instrumentation, Bid Item 3.5:

Payment for Electrical / Instrumentation shall be made at the contract lump sum price and shall constitute full compensation for all electrical / instrumentation work.

The bid price shall include, but not be limited to, all work required to provide for installation the Owner furnished generator; and automatic transfer switch, motor control center (MCC), transformer, lighting panel, storm drain pump control panel, service meter / entrance section switchgear, relocation of existing pump '2310' starter panel to new MCC, electrical and communications conduit and wiring, instrumentation and controls, generator start-up, and acceptance testing including final AQMD Permit to Operate, complete in place as shown on the contract drawings and as indicated in the contract specifications. The bid price shall include all labor, material, equipment, and incidentals required for execution of this bid item.

Payment for the Electrical / Instrumentation work shall be made based on the percentage of project completion to ensure compliance with all requirements throughout the duration of the contract. The completeness shall be determined by the ENGINEER and updated on progress payments.

3.6. Generator Diesel Particulate Filter Retrofit, Bid Item 3.6:

Payment for Diesel Particulate Filter Retrofit shall be made at the contract lump sum price and shall constitute full compensation for all diesel particulate filter retrofit work. The bid price shall include, but not be limited to, all work required to coordinate with authorized Caterpillar distributor to procure and install selected Johnson Matthey JM-CRT(+)-3-N-CS-BITO-10/10-LP passive diesel particulate filter on Owner furnished generator to satisfy AQMD requirements and SootAlert Module (Datalogger and Monitor). The equipment shall meet the requirements of the product submittal provided in Appendix I, or approved by the authorized Caterpillar distributor as equal. Diesel particulate filter and datalogger and monitor shall be supplied and installed by a manufacturer's approved distributor in accordance with manufacturer's installation guidelines as to not void or otherwise affect the generator warranty. If it is determined by the authorized Caterpillar Distributor that modifications to the generator enclosure or that a standalone structure is required to support the selected diesel particulate filter, the Contractor shall prepare shop drawing and calculations for the modifications, support framing and all necessary anchorage, which shall be designed, stamped, and signed by a California licensed Structural Engineer, submitted to the ENGINEER for approval prior to fabrication and installation. The bid price shall include all coordination, transportation, shipping, labor, materials, equipment, and incidentals required for execution of this bid item.

3.7. Best Management Practices, Bid Item 3.7:

Payment for Best Management Practices shall be made at the contract lump sum price and shall constitute full compensation for complying with the required water pollution control measures. The bid price shall include, but not be limited to, all labor, material, equipment, and incidentals required for execution of this bid item noted within Section 01572 - Erosion Control Plan and within the Water Pollution Control Notes as shown on the contract drawings, including submittal of an Erosion / Sediment Control Plan to the City for approval.

Payment for the Stormwater Pollution Prevention and Implementation/Maintenance shall be made based on the percentage of project

completion to ensure compliance with all requirements. The completeness shall be determined by the ENGINEER and updated on progress payments.

3.8. Unforeseen Work Not Covered Within All Other Bid Items, Bid Item 3.8:

Payment for Unforeseen Work Not Covered Within All Other Bid Items shall be made for change orders or field orders related to the improvements as may be deemed necessary and approved by the City.

4. TEXAS ST PUMP STATION SITE (TS):

4.1. Mobilization/Demobilization, Bid Item 4.1:

Payment for Mobilization/Demobilization shall be made at the contract lump sum price and shall constitute full compensation for mobilization and demobilization. The bid price shall include, but not be limited to, preliminary construction schedule, sequence of construction (SOC) plan, bonds, insurance, permit fees, installation and relocation of information signs, shop drawings, catalog submittals, moving off of jobsite all CONTRACTOR'S equipment, material and facilities, removal of all waste and debris, cleanup, record as-built drawings, and completion of all contract closeout requirements. The bid price shall include, but not be limited to, all labor, material, equipment, and incidentals required for execution of this bid item noted within Section 01721 - Mobilization and 01740 - Demobilization.

Payment of the Mobilization/Demobilization shall be made based on 5 percent of the Item 4 Base Bid Total Price and shall be made in two separate payment applications to ensure compliance with all requirements. The first shall be made with the first payment application, and the second shall be made with the last and final payment application after 100% of work is completed and accepted by the City. Mobilization shall constitute 4% of the Item 4 Base Bid Total Price and Demobilization shall constitute 1% of the Item 4 Base Bid Total Price. The completeness shall be determined by the ENGINEER and updated on progress payments.

4.2. Demolition, Bid Item 4.2:

Payment for Demolition shall be made at the contract lump sum price and shall constitute full compensation for demolition work. The bid price shall include, but not be limited to, sawcut and asphalt pavement removal at proposed generator location. The bid price shall include, but not be limited to, all labor, material, equipment, and incidentals required for execution of this bid item.

Payment for the Demolition work shall be made based on the percentage of project completion to ensure compliance with all requirements throughout the duration of the contract. The completeness shall be determined by the ENGINEER and updated on progress payments.

4.3. Civil / Structural, Bid Item 4.3:

Payment for Civil / Structural shall be made at the contract lump sum price and shall constitute full compensation for civil / structural work. The bid price shall include, but not be limited to, development of traffic control plans to be submitted

to the City for approval prior to the scheduled commencement of work, existing site conditions and utility research, construction survey related tasks noted within Section 01722 – Surveying, potholing and utility locate/verification related tasks noted within Section 01732 – Potholing, Trench Shoring, Sheeting, and Bracing related tasks in accordance with Subsections 5-7.2 “Safety Orders," and 306-4, "Shoring and Bracing” of the SSPWC; and State of California Division of Occupational Safety and Health (Cal/OSHA) Construction Safety Orders, all work required to provide for receiving, storage, and installation of Owner furnished generators, generator slab, generator anchorage, asphalt paving, removable bollards, required grading, over-excavation, backfill, and compaction, as shown on the contract drawings, and as indicated in the contract specifications. Bid price shall include coordinating generator delivery to project site with Owner furnished generator supplier, and unloading of generators onsite. Bid price shall include completely filling the generator’s fuel tank with diesel one time, for use during startup and testing. The bid price shall include all labor, materials, equipment, and incidentals required for execution of this bid item.

Payment for the Civil / Structural work shall be made based on the percentage of project completion to ensure compliance with all requirements throughout the duration of the contract. The completeness shall be determined by the ENGINEER and updated on progress payments.

4.4. Electrical / Instrumentation, Bid Item 4.4:

Payment for Electrical / Instrumentation shall be made at the contract lump sum price and shall constitute full compensation for all electrical / instrumentation work. The bid price shall include, but not be limited to, all work required to provide for installation of the Owner furnished generators; and automatic transfer switch, electrical and communications conduit and wiring, instrumentation and controls, generator start-up, and acceptance testing including final AQMD Permit to Operate, complete in place as shown on the contract drawings and as indicated in the contract specifications. The bid price shall include all labor, material, equipment, and incidentals required for execution of this bid item.

Payment for the Electrical / Instrumentation work shall be made based on the percentage of project completion to ensure compliance with all requirements throughout the duration of the contract. The completeness shall be determined by the ENGINEER and updated on progress payments.

4.5. Generator Diesel Particulate Filter Retrofit, Bid Item 4.5:

Payment for Diesel Particulate Filter Retrofit shall be made at the contract lump sum price and shall constitute full compensation for all diesel particulate filter retrofit work. The bid price shall include, but not be limited to, all work required to coordinate with authorized Caterpillar distributor to procure and install selected Johnson Matthey JM-CRT(+)-3-N-CS-BITO-10/10-LP passive diesel particulate filters on Owner furnished generators to satisfy AQMD requirements and SootAlert Modules (Datalogger and Monitor). The equipment shall meet the requirements of the product submittal provided in Appendix I, or approved by the authorized Caterpillar distributor as equal. Diesel particulate filters and dataloggers and monitors shall be supplied and installed by a manufacturer’s approved distributor in accordance with manufacturer’s installation guidelines as

to not void or otherwise affect the generator warranty. If it is determined by the authorized Caterpillar Distributor that modifications to the generator enclosure or that a standalone structure is required to support the selected diesel particulate filter, the Contractor shall prepare shop drawing and calculations for the modifications, support framing and all necessary anchorage, which shall be designed, stamped, and signed by a California licensed Structural Engineer, submitted to the ENGINEER for approval prior to fabrication and installation. The bid price shall include all coordination, transportation, shipping, labor, materials, equipment, and incidentals required for execution of this bid item.

4.6. Best Management Practices, Bid Item 4.6:

Payment for Best Management Practices shall be made at the contract lump sum price and shall constitute full compensation for complying with the required water pollution control measures. The bid price shall include, but not be limited to, all labor, material, equipment, and incidentals required for execution of this bid item noted within Section 01572 - Erosion Control Plan and within the Water Pollution Control Notes as shown on the contract drawings, including submittal of an Erosion / Sediment Control Plan to the City for approval.

Payment for the Stormwater Pollution Prevention and Implementation/Maintenance shall be made based on the percentage of project completion to ensure compliance with all requirements. The completeness shall be determined by the ENGINEER and updated on progress payments.

4.7. Unforeseen Work Not Covered Within All Other Bid Items, Bid Item 4.7:

Payment for Unforeseen Work Not Covered Within All Other Bid Items shall be made for change orders or field orders related to the improvements as may be deemed necessary and approved by the City.

PART 2 – PRODUCTS (Not Used)

PART 3 – EXECUTION (Not Used)

END OF SECTION

SECTION 01251

CHANGE ORDER REQUESTS

PART 1 - GENERAL

1.1 REQUIREMENT

All quotations for preliminary change orders for extras, changes, additions, or deletions to the Work as described in EXTRA WORK of the GENERAL CONDITIONS shall be submitted to the ENGINEER, in writing, on the Change Order Request (COR) Cover Sheet and the Change Order Cost Summary Form, both attached, and in conformance with the requirements of Section 01254 CHANGE ORDERS. The quotation shall be firm for a period of not less than sixty (60) calendar days from the date of receipt of the quotation by the ENGINEER. The CONTRACTOR shall submit its written cost quotation and Time Impact Analysis not later than fifteen (15) days after being requested to provide such quotation, unless the ENGINEER allows more time. Delays in submitting quotations beyond the fifteen (15) days set forth herein, which cause a delay in the issuance of a Change Order or a delay to the completion date of the project, shall not be cause for a claim or a time extension under the Contract.

The ENGINEER'S request for quotation on a preliminary change shall not be considered authorization to proceed with the changed work prior to the issuance of a final Lump Sum or Time & Material Change Order, unless directed otherwise, in writing, by the ENGINEER, nor shall such request constitute justification for a delay to the existing Work or a time extension under the Contract.

PART 2 – PRODUCTS (Not Used)

PART 3 – EXECUTION (Not Used)

END OF SECTION

THE CITY OF REDLANDS
MUNICIPAL UTILITIES AND ENGINEERING DEPARTMENT

CHANGE ORDER REQUEST (COR)

Project Name:		**COR Number:**	
Project Number:		**Date of Request:**	
Requested By:			

Change Name:	

Description of Change (Required):

Reason for Change (Required):

Location of Change (Required): List all locations if various locations are included in this Request

Additional Days Requested Due to Change (If Applicable):

Total Net Change in Cost: Note: Attach all supporting documents for cost justification	$ 0.00

Requestor:

Signature: _____

Title: _____ **Date:** _____

Change Order Cost Summary

Project Name :

Change Order Request No. :

Date :

		Direct Labor	Direct Materials	Direct Equipment		Totals
(1):	Lump Sum Work by Prime Contractor	$0.00	$0.00	$0.00		
(2):	"T&M" Work by Prime Contractor	$0.00	$0.00	$0.00		
(3):	Subtotal - Direct Work (Prime Contractor)	$0.00	$0.00	$0.00		
(4):	All Lump Sum Work by subcontractors (any tier)	$0.00	$0.00	$0.00		
(5):	All "T&M" Work by subcontractors (any tier)	$0.00	$0.00	$0.00		
(6):	Subtotal - Direct Work (all subcontractors)	$0.00	$0.00	$0.00		$0.00
					Add each of the three columns across and enter to the right.	
(3)+(6)=(7):	Total - Direct Costs	$0.00	$0.00	$0.00		$0.00
(8):	Markup	(20% of direct labor) $0.00	(15% of direct mat'l) $0.00	(15% of direct equip) $0.00		$0.00
(9):	Prime Contractor Markup for subcontractors				10% of line (6) direct sub work up to $5,000 plus 5% of line (6) direct sub work over $5,000	
(10):	Bonds & Insurance				1% of line (7) all direct work	$0.00
(11):	Additional amount permitted by Contract					
(12):	**GRAND TOTAL**				Add sums of lines) (7), (8), (9), (10) and (11)	**$0.00**

THIS PAGE INTENTIONALLY LEFT BLANK

SECTION 01254

CHANGE ORDERS

PART 1 - GENERAL

1.1. REQUIREMENT

A. General

Payment to the CONTRACTOR, or credit to the CITY, for any change, addition, deletion or extra to the Work, or settlement of any Claim, covered by any Change Order, shall be determined by the methods set forth herein. The ENGINEER may change the Plans and Specifications, character of the Work, or quantity of Work provided the total arithmetic dollar value of all such changes, both additive and deductive, does not exceed twenty-five percent (25%) of the Contract Price. Should it become necessary to exceed this limitation, the change shall be by written Supplemental Agreement between the CONTRACTOR and the CITY, which shall be executed by a Change Order.

Unless otherwise stipulated, “Unit Prices” include all costs necessary to furnish, install and complete the Work. The “Unit Prices” include all direct costs for labor, equipment and materials, all insurance and bond costs, all field and office supervisors and assistants, all onsite project administration, security costs, the cost of small tools and consumables, incidental job burdens, and all general home office expenses and no separate allowance will be made therefor. Assistants to field and office supervisors include all clerical, stenographic, and general office help. Incidental job burdens include, but is not limited to, office equipment and supplies, temporary toilets, telephone, utilities, safety equipment, warning devices, personal protective equipment, and conformance to OSHA requirements. Project administration includes, but is not limited to, review and coordination, estimating, engineering, scheduling, and expediting relative to Change Orders, and updating and furnishing Record Drawings to incorporate changes, schedule update, supervision not applied solely to the Work of the Change Order, home office salaries and expenses, and CITY of Redlands Business Tax.

B. Unit Prices

Unit prices stipulated in the Bid or itemized in the approved Schedule of Values shall be utilized, where they are applicable and determined reasonable by the ENGINEER. In the event that the Change Order results in a change in the original quantity of more than twenty-five percent (25%), either increase or decrease, then either the ENGINEER or the CONTRACTOR may request a review of the unit price to determine if a new unit price shall be mutually determined by negotiation. Any new unit price mutually determined under this Subsection shall only apply to the units in excess of one hundred twenty five percent (125%) of the original

quantity for overruns. In case of underruns, the unit price stipulated in the Bid shall be applied to the first twenty-five percent (25%) of the actual quantity of work performed and the new mutually determined price shall be applied to the quantity between twenty-five percent (25%) and seventy-five percent (75%) of the original quantity.

Renegotiated unit prices or unit prices for new items added to the Contract by Change Order shall be determined in accordance with Subsections B through G. Whether stipulated in the Bid, itemized in the approved Schedule of Values or renegotiated, the unit prices used for payment constitute the total adjustment with no further costs owed for overhead, impact, profit, delay or impact to unchanged portions of the Contract, or any other reason. The unit price shall be full and final compensation as described in Subsection D.

The cost proposals for renegotiated unit prices shall be presented in accordance with the provisions of Subsections B through G. Should any Bid Item be deleted in its entirety, the amount bid for that bid item shall be subtracted from the total Contract amount. The CONTRACTOR shall be paid only for the actual cost incurred prior to the notification of such deletion for that Bid Item.

C. Lump Sum

The ENGINEER and the CONTRACTOR may mutually determine a total sum for the Extra Work. The CONTRACTOR shall summarize the total cost and furnish a breakdown of the proposed lump sum costs satisfactory to the ENGINEER in accordance with Subsections B through G. Such lump sum costs shall be full and final compensation as described in Subsection D. The CONTRACTOR'S quotation shall conform to the requirements of Section 01251- Change Order Requests, and be submitted in the Change Order Cost Summary Form provided (see Attachment 01251-A1). The Change Order Cost Summary Form cannot be used to nullify or supercede any specification or contractual provision.

If the method or amount of payment cannot be agreed prior to performing the Extra Work, the ENGINEER may unilaterally issue a Change Order in the amount determined reasonable by the ENGINEER for the Extra Work and direct the CONTRACTOR to proceed immediately. The ENGINEER also has the option to issue a Change Order directing the Work be done on a Time and Materials basis with the CONTRACTOR providing all labor, equipment, and materials necessary to complete the Work in a satisfactory manner and within a reasonable period of time. Estimates for lump sum quotations and accounting for Time and Materials work shall be limited to direct expenditures necessitated specifically by the subject Extra Work, and shall be segregated as follows:

1. Labor, up to and including working general foremen, who are directly assigned to the Extra Work. Employees identified as superintendents or non-working general foremen shall not be charged as labor on Extra Work. The labor costs shall include

actual documented payroll costs including wages, payroll taxes as established by law (i.e., FICA, Federal and State Unemployment Taxes), fringe benefits as established by negotiated labor agreements, and any insurance costs (such as Worker's Compensation and General Liability Insurance but shall not include Automobile Liability Insurance or any other insurance costs). A detailed breakdown of those subcomponents of labor costs, by all crafts shall be submitted to the ENGINEER, by the CONTRACTOR and all Subcontractors, for approval, as part of the documentation of labor costs, within ten (10) working days after issuance of the Notice to Proceed. No other subcomponents of labor costs shall be considered, unless approved in writing by the ENGINEER.

The labor cost is not allowed to be increased by using labor classifications with paygrades higher than necessary to accomplish the Work.

2. Materials: The cost of materials used in performing the Extra Work will be the cost, including sales tax and freight, to the purchaser, whether CONTRACTOR, Subcontractor or other forces, from the supplier thereof, except as follows:

   a. Cash or trade discounts available to the purchaser shall be credited to the CITY notwithstanding the fact that such discounts may not have been taken by the CONTRACTOR.

   b. For materials secured by other than a direct purchase and direct billing to the purchaser, the cost shall be deemed to be the price paid to the actual supplier as determined by the ENGINEER. Supplier markup, except for actual costs incurred in the handling of such materials, will not be allowed.

   c. Payment for materials from sources owned wholly or in part by the purchaser shall not exceed the price paid by the purchaser for similar materials from said sources on contract items or the current wholesale price for such materials delivered to the Jobsite, whichever price is lower.

   d. If, in the opinion of the ENGINEER, the cost of materials is excessive, or the CONTRACTOR does not furnish satisfactory evidence of the cost of such materials, then the cost shall be deemed to be the lowest current wholesale price for the quantity concerned, delivered to the Jobsite less cash or trade discount. The CITY reserves the right to furnish materials for the Work and no claim shall be made by the CONTRACTOR for costs and profit on such materials.

e. For the purposes of this Section, a "Supplier" is defined as any person or persons, firm or business, who supplies materials of construction and/or permanent equipment, but who does not perform any portion of the Work of the Contract on site, for the CONTRACTOR, except that labor or labor supervision which may be required by some manufacturers as part of their equipment installation for warranty or other purposes.

3. Equipment Costs, including ownership, lease or rental costs, as well as operating costs, for individual equipment units whose replacement value is in excess of $500. Transportation and set up costs shall be included, but only if the equipment is imported to the worksite solely to perform work on the Extra Work described in the Change Order and the CONTRACTOR can demonstrate that the changed work cannot or could not be performed economically with equipment already at the site. Equipment costs shall be determined in accordance with the requirements set forth in Subsection G.

4. Small tools, equipment, consumables and incidental costs: No separate payment will be made for the use of small tools or equipment with a replacement value of $500 or less. This applies to tools and equipment owned by the CONTRACTOR or its subcontractors of any tier. Also, no separate payment will be made for fuel, lubricants, tool or equipment repairs, tool or equipment maintenance, consumables, drinking water, sanitary facilities or other incidentals. These costs are already included as a part of Markup.

5. Subcontractor Costs, including their overhead and profit, provided that such costs are direct costs to the CONTRACTOR for performing the Extra Work as set forth in Subsections B through G.

D. Time and Materials Work

The costs of all Changed/Extra Work submitted under the Time and Materials (T&M) method shall be formulated in accordance with the provisions of Subsections B through I.

Unless otherwise stipulated on the Change Order, the “Not-to-Exceed” amount for all T&M Change Orders is $10000. The CONTRACTOR is responsible for tracking costs and for notifying the ENGINEER in writing when costs approach 50% and 75% of the “Not-to-Exceed” amount. In addition, if the Changed/Extra Work cannot be completed within the “Not-to-Exceed” limit, the CONTRACTOR shall notify the ENGINEER in writing, and in a timely manner, that the limit requires an increase. The CITY will only reimburse eligible costs up to the “Not-to-Exceed” amount.

The CONTRACTOR shall notify the INSPECTOR at the beginning of each day when Changed/Extra Work is being performed. The

CONTRACTOR shall notify the INSPECTOR of the Changed/Extra Work being performed and describe the personnel involved, whether by CONTRACTOR forces or by its subcontractors at any tier. Failure to notify the INSPECTOR prior to the start of Changed/Extra Work serves as the CONTRACTOR'S waiver to claim for compensation on that day.

For each working day, the CONTRACTOR shall submit a "Daily Extra Work Report" (DEWR) to the INSPECTOR. The "Daily Extra Work Report" shall summarize labor, equipment and materials supplied. The INSPECTOR will only consider Forms that are properly completed as described below.

1. Separate forms must be used for labor and for equipment/materials.

2. Labor, equipment, material or expenditures that are not included on The DEWR are ineligible for payment. There will be no exceptions to this requirement. It is the responsibility of the CONTRACTOR to include any and all items of labor, equipment, or material for which it requests compensation for each day's work completed.

3. Information required on the Labor form shall include name of personnel, personnel classification, and only the number of hours worked on Changed/Extra work for the day being reported. Since the overhead allowance already includes all necessary supervision, any hours for additional supervision or non-working foremen are ineligible for additional payment. The premium pay for a general foreman is eligible for payment only if the general foreman is a working foreman and a general foreman was required by a Union Labor Agreement or otherwise approved by the INSPECTOR. The general foreman rate is eligible for payment only during the time that a general foreman was required for the Changed/Extra Work.

4. Information required on the Equipment/Material shall include CONTRACTOR-owned equipment and/or tools, and rented equipment or tools for which compensation is requested. Information shall include the type of equipment, size of equipment, equipment identification number, appurtenances, and only the number of hours worked on the Changed/Extra work.

5. The only allowable materials are materials delivered to the job site and/or incorporated only into the Changed/Extra work. The allowable materials shall be listed on the T&M sheet for the day that they are delivered to the job site and/or incorporated into the Changed/Extra work.

6. Delivery ticket(s) and/or bill(s) of lading for rental equipment and/or tools delivered to the site and/or material incorporated into the work for the day being reported must be attached with the

T&M sheet for that day. No payment will be allowed for materials and/or rented equipment unless receipt(s) or bill(s) of lading is attached. If the request for payment is not substantiated by original vendor/supplier invoices, acceptable copies of original invoices, or other documentation acceptable to the INSPECTOR, the CITY may establish the cost of the item(s) at the lowest possible wholesale price or rental rate applicable while the work was being performed.

7. Failure to submit the required "Daily Extra Work Report of Time and Material Work" by the close of the next working day shall waive all rights for that day unless otherwise approved by the INSPECTOR. Work that cannot be substantiated by a "Daily Report", approved and signed by the INSPECTOR, is ineligible for payment.

8. The Contractor is responsible for preparing the "Daily Extra Work Report" for work by its Subcontractors and submitting the Forms to the INSPECTOR on time.

9. The CONTRACTOR must have each "Daily Extra Work Report" verified by the INSPECTOR. After the "Daily Extra Work Report" is approved by the INSPECTOR, both the CONTRACTOR and INSPECTOR sign the report. The original "Daily Extra Work Report" is retained by the INSPECTOR with a copy provided to the CONTRACTOR.

10. When the "Daily Extra Work Report" is signed by the INSPECTOR and the CONTRACTOR, it is binding on the CONTRACTOR and its Subcontractors.

11. When agreed to by the INSPECTOR, the CONTRACTOR may submit a supplemental "Daily Extra Work Report" for labor, materials, or equipment for which the CONTRACTOR requests compensation but failed to list on the original daily report.

    a. These supplemental forms shall be marked "SUPPLEMENTAL".

    b. Unless otherwise approved by the INSPECTOR, the supplemental forms may only be submitted for approval up to two (2) working days following the date when the work was performed.

No payment will be allowed for labor, materials, or equipment included on T&M sheets not signed by the CONTRACTOR and the INSPECTOR. Payment will not be allowed for labor, materials, or equipment included on T&M sheets signed by anyone other than the INSPECTOR or the INSPECTOR'S immediate supervisor.

D. Change Order Requirements

It is the intent of the CITY to settle all Change Orders full and final at the time the Change Order is issued. Therefore, the following paragraph shall be made a part of all Change Orders, whether included or not on the actual change order:

> "The compensation (time and cost) set forth in a Change Order comprises the total compensation due the CONTRACTOR, all Subcontractors, and all Suppliers, for the Work or change defined in the Change Order, including impact on unchanged work. By signing the Change Order, the CONTRACTOR acknowledges and agrees on behalf of himself, all Subcontractors, and all Suppliers, that the stipulated compensation includes payment for all work contained in the Change Order, plus all payment for the interruption of schedules, extended field overhead costs, delay, and all impact, ripple effect or cumulative impact on all other work under this Contract. The signing of the Change Order indicates that the Change Order constitutes full mutual accord and satisfaction for the change, and that the time and/or cost under the Change Order constitutes the total equitable adjustment owed the CONTRACTOR, all Subcontractors, and all Suppliers as a result of the change. The CONTRACTOR, on behalf of himself, all subcontractors, and all Suppliers, agrees to waive all rights, without exception or reservation of any kind whatsoever, to file any further claim related to this Change Order. No further claim or request for equitable adjustment of any type for any reasonably foreseeable cause shall arise out of or as a result of this Change Order or the impact of this Change Order on the remainder of the Work under this Contract."

Costs which shall not be paid in Change Orders under this Contract include, but are not limited to, interest costs of any type; claim preparation or filing costs; legal expenses; the costs of preparing or reviewing proposed Change Orders or Change Order proposals; lost revenue; lost profits; lost income or earnings; rescheduling costs; costs of idled equipment when such equipment is not at the site or has not yet been employed on the Work; lost earnings or interest on unpaid retainage; claims consulting costs; and the costs of corporate officer or staff visiting the site; any compensation due to the fluctuation of foreign currency conversion or exchange rates; loss of other business; changes in taxes or increased tax rates of any kind or any costs identified as unallowable under the provisions of the Federal Acquisition Regulations.

Extensions of time shall be based solely upon the effect of delays to the Work as a whole. Extensions of time shall not be granted for delays to the Work, unless the CONTRACTOR can clearly demonstrate, through analysis of the current updated schedule, that the delay to the Work as a whole arose or will arise from causes other than normal weather, beyond the control and without fault or negligence of the CONTRACTOR, or any Subcontractor, at any tier, and that such delays did or will, in fact, delay the progress of the Work as a whole. The CONTRACTOR shall not be

entitled to a time extension unless it submits a Time Impact Analysis which is a calculation of the extent of the delay to the end date of the Work and which shows that the Work has been or will be extended beyond the current Contract completion date. A Time Impact Analysis is a scheduling procedure which utilizes the networking techniques (fragnets) and a written analysis of the facts associated with the alleged delay to demonstrate the effect of the alleged delay on the critical path of the schedule. A "fragnet" is defined as a sequence of new activities and/or activity revisions that are proposed to be added to the existing current updated schedule to demonstrate (mathematically and graphically) the influence of the alleged delay on the end date of the Work and shall be the sole method for incorporating delays and impacts into the schedule. The objective of a Time Impact Analysis is to pinpoint, isolate, and quantify all time impact associated with a specific issue and determine its time relationship to past or current delays. Time extensions shall not be allowed for delays to parts of the Work that are not on the critical path of the currently approved monthly updated project schedule. Time extensions shall not be granted, nor delay damages of any kind whatsoever paid to the CONTRACTOR, until all available float, slack, or contingency time on the project is used and the end date of the Work is moved beyond the current, adjusted Contract completion date.

The cost summary, cost breakdowns and requests for cost reimbursement submitted by the CONTRACTOR (for delay, disruption, hindrance and interference associated with the changes, additions, deletions or extras) shall be itemized in a manner that, with mathematical certainty and without reliance upon probabilities or inferences, segregates the direct, actual reimbursable costs associated with each individual, change, addition, deletion, extra and (on an event-by-event basis) each individual delay or disruption event. Such cost summaries, breakdowns or requests shall not be based, in whole or in part, upon any methodology (such as “total cost” or “modified total cost” methodologies) that purports to calculate the CONTRACTOR’S additional costs of performance of the extra, change, addition or deletion (including without limitation the additional costs of delay, disruption or other impact) based on the difference between CONTRACTOR’S total actual Project or line item costs (with or without fee) and its original bid estimate for the Project or any original bid estimate line item. In connection with the foregoing, CONTRACTOR represents and warrants that it has the ability to generate and maintain complete and accurate cost accounting records that will reflect (i) the actual costs incurred or saved for each individual item of Extra Work, change, addition, deletion (including without limitation any costs of associated delay, disruption, interference, hindrance and the cumulative impact of each extra, change, addition, deletion on other parts of the Work); and, (ii) on an event-by-event basis, the effect of each delay or disruption that forms the basis of each request for extension of time, regardless of their scope, number, complexity, cumulative effect, or time of issuance or occurrence.

Except as provided in Section 6-6 of the General Conditions, CONTRACTOR shall have no right to recovery of any compensation,

costs, expenses or damages resulting from delay, disruption, interference, or hindrance in the performance of the Work (including without limitation interruption of schedules, excess or extraordinary extended field and indirect overhead costs, loss of productivity and the impact, ripple or cumulative effect on other Work).

CONTRACTOR waives any claim or rights and remedies based on abandonment, quantum merit, rescission or other similar legal theory by reason of any of the following circumstances, which the CONTRACTOR acknowledges and agrees are within the reasonable contemplation of the parties: (i) changes, additions, deletions and extras to the Work after execution of the Contract and issued from time to time throughout the period of construction, regardless of their scope, number, cumulative value, or complexity, to correct errors, omissions, conflicts, and ambiguities in the Contract Documents, or to implement discretionary changes to the scope of Work requested by the CITY; (ii) the issuance and performance of changes, additions, deletions and extras in a manner that is not in sequence with the as-built or as-planned progress of the Work; (iii) changes due to Differing Site Conditions; (iv) suspensions of the Work or parts thereof, or limitations on access to portions or all of the Work, for the convenience of CITY or in the interests of the Project; (v) delay or disruption to the Work due to failure of the CITY, ENGINEER or INSPECTOR to timely perform any contractual obligation.

E. Markups – Overhead and Profit

1. In addition to the direct expenditures specified for labor, materials and equipment in Subsection B, a lump sum will be paid for all overhead and profit, including: All insurance costs other than specifically mentioned in this Section, all field and office supervisors and assistants, all onsite project administration, security costs, the cost of small tools and consumables, incidental job burdens, and all general home office expenses and no separate allowance will be made therefor. Assistants to field and office supervisors include all clerical, stenographic, and general office help. Incidental job burdens include, but is not limited to, office equipment and supplies, temporary toilets, telephone, utilities, safety equipment, warning devices, personal protective equipment, and conformance to OSHA requirements. Project administration includes, but are not limited to, review and coordination, estimating, engineering, scheduling, and expediting relative to Change Orders, and updating and furnishing Record Drawings to incorporate changes, schedule update, supervision not applied solely to the Work of the Change Order, home office salaries and expenses, and CITY of Redlands Business Tax. Such lump sum shall conform to the following schedule of percentages of the total amount of direct expenditures of the CONTRACTOR and subcontractors.

(a) Work by CONTRACTOR. The following percentages shall be added to the CONTRACTOR'S costs and shall constitute the markup for all overhead and profits:

1) Direct Labor	20%
2) Direct Materials	15%
3) Direct Equipment	15%

(b) Work by Subcontractor. When all or any part of the extra work is performed by a Subcontractor, the markup established in (a) shall be applied to the Subcontractor's actual cost of such work. A markup of 10 percent on the first $5,000 of the subcontracted portion of the extra work and a markup of 5 percent on work added in excess of $5,000 of the subcontracted portion of the extra work may be added by the CONTRACTOR.

2. Bonds and Insurance

An additional allowance of one percent (1%) of all direct costs (less markup) is allowed.

3. Add/ Deduct Changes

The overhead rates determined above shall be applied to all additive Change Orders, except those utilizing as-bid Unit Prices listed in the Bid Proposal.

Any change in the Work involving both extras and credits shall show a net total cost, including subcontracts. Allowances for overhead and profit to the net total cost, as specified herein above, shall be applied if the net total cost is an extra; overhead and profit allowances shall not be applied if the net total cost is a credit. The estimated cost of deductions shall be based on labor and material prices on the date the Contract was signed.

4. When all or any part of the extra work is performed by a Subcontractor, the markup established in subsection 1.1.E.1 shall be applied to the Subcontractor's actual cost of such work. A markup of 10 percent on the first $5,000 of the subcontracted portion of the extra work and a markup of 5 percent on work added in excess of $5,000 of the subcontracted portion of the extra work may be added by the CONTRACTOR.

F. CITY Furnished Materials, Equipment and Services

The ENGINEER reserves the right to furnish materials, equipment and services deemed expedient for use on the Changed/Extra Work. The CONTRACTOR shall have no claim for profit or overhead on the cost of such materials, equipment and services.

G. Equipment Costs

The rates for rental or leased equipment shall not exceed the rates listed in the Caltrans Labor Surcharge and Equipment Rental Rates (Caltrans LS&ERR). For T&M Change Orders, the rates are established by the actual paid invoice(s) that comply with the requirements of Subsections G.1 and G.3. Owned equipment costs shall not exceed the rates established by Subsection G.2. The most recent published edition in effect at the commencement of actual equipment use shall be used.

The rates paid for any rented or leased equipment or tools shall include the cost of fuel, oil, lubrication, supplies, small tools, necessary attachments, repairs and maintenance of any kind, depreciation, storage, insurance and all incidental costs associated with the operation of the equipment or tools.

It is the responsibility of the CONTRACTOR to include any appurtenances added to equipment which would increase the basic rate for said equipment (i.e., hoe-ram, oversize bucket, and etcetera) as established in the acceptable rental rate guide. All equipment and/ or tools shall be acceptable to the INSPECTOR, in good working condition, suitable for the purpose for which it is to be used, and necessary to complete the Changed/Extra Work. Payment will be based on the manner in which the equipment was actually powered, operated and modified per the equipment manufacturer's recommendations.

1. Rented or Leased Equipment

   For equipment rented or leased (including lease with purchase option) in arm's length transactions from outside vendors, the CONTRACTOR shall be paid the actual invoiced, rented or leased rates provided that the invoiced lease or rental rates do not exceed the rates set forth in the Caltrans LS&ERR. Arm's length rental or lease transactions are those in which the firm involved in rental or lease of such equipment is not associated with, owned by, have common management, directorship, facilities, or stockholders with the firm renting the equipment. Submittal by a CONTRACTOR of a rental or leased invoice from the lessor will be prima facie proof of compliance with the above. However, such invoices are not conclusive proof; if questioned, the burden of proof remains with the CONTRACTOR. In no event shall the leased equipment rate billed to the CITY be at rates exceeding those prescribed in the following table:

Actual Usage (Change Order & Contract Work Combined)	Payment Category
Less than 8 hours	Hourly Rate
8 or more hours but less than 7 days	Daily Rate
7 or more days but less than 30 days	Weekly Rate
30 calendar days or more	Monthly Rate

   a. When in Use:

Actual equipment use time documented by the INSPECTOR shall be the basis that the equipment was utilized on the changed work and paid for under the Change Order. In addition to the lease or rental rate, equipment-operating costs shall not exceed the estimated hourly operating rate as set forth in the Caltrans LS&ERR. The hours of operation shall be based upon actual equipment usage on the changed work as recorded by the INSPECTOR. For multiple shift work sequences, the allowable equipment rate shall not exceed fifty percent (50%) of the base rate, for second or third shifts.

b. When Idle:

Idle equipment is equipment on site and necessary to perform the Work under the change but not in actual use due solely to the impact of the changed work. Equipment operating costs due to idle time, documented by the INSPECTOR, shall be paid at the rate determined in "G" (1) above. Idle time shall include a reasonable time allowance to and from the project site.

Payment for equipment or tools shall be limited to hours actually worked on the Changed/Extra Work if the equipment or tool is already on site for Work under the original Contract. No "standby" time will be paid for equipment already on site for Work under the original Contract.

If equipment or tools are used intermittently and, when not in use, could be returned to the rental source at less expense than holding it at the work site, it shall be returned, unless the CONTRACTOR elects to keep it at the work site at no expense to the CITY.

2. Owned and Other Equipment

Equipment rates for owned equipment or equipment provided in other than arm's length transactions shall not exceed the total hourly costs as set forth in the Caltrans "Labor Surcharge and Equipment Rental Rates" effective at the time the work is performed. (The Caltrans equipment rental rates are available on the internet at http://www.dot.ca.gov/hq/construc/equipmnt.html.) If the equipment is not listed in Caltrans LS&ERR, then the Rental Rate Blue Book shall be used. When using the Blue Book, the hourly rate for any period less than 7 days shall be the weekly rate divided by 40, plus the Operating Cost. Except as noted herein below, this equipment hourly rate plus the estimated operating cost per hour from the Blue Book will be paid for each hour the equipment actually performs the Extra Work. Daily records listing the equipment units and their respective operators, identification code, and actual usage on the Work under the Change Order, as

certified at the end of each work day (or work shift if the Work is being performed in multiple work shift sequence) by the INSPECTOR shall be the record upon which actual equipment use shall be based. For multiple shift work sequences, the Caltrans overtime factor shall be applied (When using the Blue Book one-half the Non-Operating Cost will be deducted for second and third shifts. The Non-Operating Costs are the Blue Book monthly or weekly/40 rates, as applicable.). It is agreed that this rate shall represent payment in full for all the CONTRACTOR'S direct costs.

a. When Idle:

Payment for equipment necessary to be on the site to complete the Work, but not in actual use due solely to the impact of the changed work, shall be paid per the table in Caltrans Standard Specifications Section 9-1.03A(3b), provided that its presence and necessity on the site has been documented by the INSPECTOR, and further provided that the equipment was idled solely by actions of the CITY. Idle equipment time will only be paid as a function of delays specifically directed or caused by the CITY'S actions. In no event shall the idle time claimed in a day for a particular piece of equipment exceed the normal work schedule established for the project - usually eight (8) hours per day or forty (40) hours per week, and excluding Saturdays, Sundays, and holidays. For multiple shift work sequence, the allowable idle equipment rate shall not be allowed, for second or third shifts. It is agreed that this rate shall represent payment in full for all the CONTRACTOR'S direct costs.

3. Equipment Haulage and Set Up Costs

Documented and actual equipment haulage and set up costs shall be paid for, if applicable as set forth in Subsection B.3.

4. Other Equipment Cost Guides

In the event that a piece of equipment used on a Change Order is not listed in Caltrans or the Blue Book, costs may be derived from the Associated General CONTRACTOR'S of America Equipment Ownership Guide, the Associated Equipment Dealers Guide, or the Equipment Rate Guide published by the U.S. Army Corps of Engineers as adjusted appropriately for the type of work and use and the regional area of the Work under this Contract.

H. Records

At any time should the CONTRACTOR deviate substantially from the schedule, method and sequence of operation, equipment, cost or pricing

data furnished by the CONTRACTOR and agreed to by the CITY in connection with the Change Order or should the CITY determine that any price negotiated in connection with the Change Order is defective due to such deviation or the fault of the CONTRACTOR, the CITY reserves the right to reduce the Change Order cost and reissue the Change Order at the amount in which the CITY determines to be the actual costs to complete the change.

Whenever any material or process is indicated or specified by patent or a proprietary name, or by name of a manufacturer in the Change Order, such direction shall not relieve the CONTRACTOR'S responsibility or obligation to perform work in accordance with the contract requirements. The CONTRACTOR shall be solely responsible for, and have control over construction means, methods, techniques, sequences and procedures, coordination of all portions of the contract and Change Order work.

The CONTRACTOR shall on a weekly basis submit an approximate accounting of the amount expended on the Time and Materials work to date and an estimate of the Impact to the time of performance of work.

I. Partial Payments for Time and Materials Work.

Progress payments for Time and Materials work shall only be made if the anticipated cost of the changed work is in excess of $50,000 and/or the time to perform the changed work will exceed two (2) months duration. To receive payments for Time and Materials work, the CONTRACTOR shall submit to the ENGINEER an invoice of the daily reports which were verified by the INSPECTOR, with details and documents, verifying the CONTRACTOR'S and Subcontractor's actual costs incurred for the Time and Materials work as set forth in Subsections B through H. Costs shall be submitted within thirty (30) calendar days after the T&M work has been satisfactorily completed unless an extension of time for submittal is authorized in writing by the INSPECTOR.

PART 2 – PRODUCTS (Not Used)

PART 3 – EXECUTION (Not Used)

END OF SECTION

SECTION 01298

SCHEDULE OF VALUES

PART 1 - GENERAL

1.1 REQUIREMENT

A. The Schedule of Values shall be used as a basis for determining progress payments on a lump sum contract or any designated lump sum bid item. The Schedule of Values shall be a schedule of cost loaded construction activities equal, in total, to the lump sum bid and shall be in such form and sufficient detail to correctly represent a reasonable apportionment of the lump sum. Prior to submitting an invoice for payment, the CONTRACTOR shall have submitted a detailed Schedule of Values and obtained approval from the ENGINEER.

B. Each lump sum bid item on the Schedule of Work and Prices, as set forth in the Bid must be broken down separately. The breakdown of each lump sum bid item must cover the cost of construction required by the contract documents for that item. The sum of the values for the construction activities, within a bid item, must equal the total bid amount for that item. The breakdown shall include subcontract amounts which shall not deviate from the amounts submitted in the Bid Proposal. The CONTRACTOR shall provide certification from the Subcontractors certifying the subcontract amounts.

C. Each activity in the Schedule of Values shall delineate one construction activity. For example, the placement of concrete between construction joints, the construction of an electrical duct bank or pipeline between points A & B. The costing for each activity should include all costs for the labor and materials or equipment required to complete the activity. For example, concrete construction activities should include all costs for the forming, placing of reinforcement, placing concrete and curing. The cost for pipeline construction activities should include materials, equipment and installation including pipeline supports or thrust blocks. The excavation and backfill for a pipeline or structure may be separate activities. The Contract Price breakdown shall include the itemized costs for the plant establishment and any maintenance services to be performed before the final project acceptance is made. No non-construction activity shall be cost loaded.

D. The CONTRACTOR shall use cost loaded construction activities from the Construction Schedule as a Schedule of Values. Each construction activity shall be encoded to its bid item and a sort provided for each bid item totaling the cost loaded amount. The total of the Cost Loaded amounts for each bid item shall equal the amount bid for that item. The total of the Schedule of Values shall equal the current Contract value at all times. At any time during the progress of the Work of the Contract the INSPECTOR reserves the right to review the cost loading of the

Schedules of Values and direct necessary revisions. When requested by the INSPECTOR, the CONTRACTOR shall provide all information necessary to substantiate the cost loading.

E. Attached are samples of the Schedule of Values. The CITY will provide project specific Schedule of Values for the CONTRACTOR to use throughout the project at the Preconstruction Meeting. The Schedule of Values must be used by the CONTRATRACTOR at the time of each progress payment.

PART 2 – PRODUCTS (Not Used)

PART 3 – EXECUTION (Not Used)

***END OF SECTION**

Project Name

Contractor Name
Address
Address
Phone:

PROJECT NUMBER:

FOR BILLING PERIOD ENDING:
INVOICE DATE:
INVOICE NO.

	BID ITEM/DESCRIPTION OF WORK FOR BID ITEM	QUANT.	UNIT	UNIT BID PRICE	ITEM BID PRICE	WORK PREVIOUSLY COMPLETED		WORK COMPLETED THIS MONTH		TOTAL QTY TO DATE	VALUE OF WORK COMPL TO DATE
						QTY	$ VALUE	QTY	$VALUE		
					$0.00		$0.00			0.0	$0.00
					$0.00		$0.00			0.0	$0.00
					$0.00		$0.00			0.0	$0.00
					$0.00		$0.00			0.0	$0.00
					$0.00		$0.00			0.0	$0.00
					$0.00		$0.00			0.0	$0.00
					$0.00		$0.00		$0.00	0.0	$0.00
					$0.00		$0.00		$0.00	0.0	$0.00
					$0.00		$0.00			0.0	$0.00
					$0.00		$0.00		$0.00	0.0	$0.00
					$0.00		$0.00		$0.00	0.0	$0.00
					$0.00		$0.00			0.0	$0.00
					$0.00		$0.00		$0.00	0.0	$0.00
					$0.00		$0.00		$0.00	0.0	$0.00
					$0.00		$0.00		$0.00	0.0	$0.00
					$0.00		$0.00		$0.00	0.0	$0.00
					$0.00		$0.00			0.0	$0.00
					$0.00		$0.00		$0.00	0.0	$0.00

Project Name

Contractor Name
Address
Address
Phone:

PROJECT NUMBER:

FOR BILLING PERIOD ENDING:
INVOICE DATE:
INVOICE NO.

	BID ITEM/DESCRIPTION OF WORK FOR BID ITEM	QUANT.	UNIT	UNIT BID PRICE	ITEM BID PRICE	WORK PREVIOUSLY COMPLETED		WORK COMPLETED THIS MONTH		TOTAL QTY TO DATE	VALUE OF WORK COMPL TO DATE
						QTY	$ VALUE	QTY	$VALUE		
					$0.00		$0.00			0.0	$0.00
					$0.00		$0.00		$0.00	0.0	$0.00
					$0.00		$0.00			0.0	$0.00
					$0.00		$0.00		$0.00	0.0	$0.00
					$0.00		$0.00		$0.00	0.0	$0.00
					$0.00		$0.00		$0.00	0.0	$0.00
					$0.00		$0.00		$0.00	0.0	$0.00
					$0.00		$0.00		$0.00	0.0	$0.00
					$0.00		$0.00		$0.00	0.0	$0.00
					$0.00		$0.00			0.0	$0.00
	TOTALS				$0.00		$0.00		$0.00		$0.00

SUMMARY OF CHANGE ORDERS	QTY	UNIT	UNIT BID PRICE	QTY	$ VALUE	QTY	$ VALUE	TOTAL QTY TO DATE	VALUE OF WORK COMPL TO DATE
CHANGE ORDER NO. 1	1	LS						0.0	$0.00
CHANGE ORDER NO. 2	1	LS						0.0	$0.00
CHANGE ORDER NO. 3	1	LS						0.0	$0.00
CHANGE ORDER NO. 4	1	LS						0.0	$0.00
CHANGE ORDER NO. 5	1	LS						0.0	$0.00
CHANGE ORDER NO. 6	1	LS						0.0	$0.00
CHANGE ORDER NO. 7	1	LS						0.0	$0.00
CHANGE ORDER NO. 8	1	LS						0.0	$0.00
CHANGE ORDER NO. 9	1	LS						0.0	$0.00
CHANGE ORDER NO. 10	1	LS						0.0	$0.00
								0.0	$0.00
								0.0	$0.00
								0.0	$0.00
								0.0	$0.00
								0.0	$0.00
CHANGE ORDERS TOTAL			$0.00				$0.00		$0.00

			VALUE OF WORK COMPLETED TO DATE	$0.00
ORIGINAL CONTRACT PRICE	$0.00		AMOUNT DUE THIS PERIOD INCL RETENTION	$0.00
TOTAL AMOUNT OF CHANGE ORDERS	$0.00		LESS 5% RETENTION	$0.00
ESTIMATED TOTAL CONTRACT PRICE TO DATE	$0.00		**AMOUNT DUE THIS PERIOD**	**$0.00**

THIS PAGE INTENTIONALLY LEFT BLANK

SECTION 01321

CONSTRUCTION SCHEDULE

PART 1 - GENERAL

1.1 REQUIREMENT

A. It is expressly understood and agreed that the time of beginning, the rate of progress, and the time of completion of the Work are of the essence of this Contract.

B. The CONTRACTOR'S representative in charge of scheduling is required to attend all meetings pertaining to scheduling and progress of the Work.

C. The CONTRACTOR shall submit to the ENGINEER 3 hard copies and the electronic file of the CONTRACTOR'S Construction Schedule (the schedule) at the time of the preconstruction meeting. The schedule shall be a Critical Path Method (CPM) Network with the critical path clearly shown. Primavera Project Management or Microsoft Project shall be the scheduling software. The schedule shall include the following at a minimum:

1. Activity ID,
2. Activity Description,
3. Start date for each activity,
4. Finish date for each activity,
5. Original duration,
6. Predecessor,
7. Successor,
8. Percent Complete,
9. Remaining Days.

A minimum of seven (7) calendar days for review of each schedule. Schedule activities shall be of sufficient detail to assure adequate planning has been done for proper execution of the Work and such that, in the sole judgement of the ENGINEER, it provides an appropriate basis for monitoring progress. The schedule shall begin with the date of issuance of the Notice to Proceed and conclude with the date of Final Completion shown in the Contract. Submittal and approval of the schedule in accordance with the requirements of this Section is a condition precedent to the issuance of any payments under this Contract. Once the schedule is approved it will become the baseline schedule and must be shown and compared on all subsequent schedule submittals.

D. Float, slack time, or contingency within the schedule (i.e., the difference in time between the project's early completion date and the required Contract Completion date), and total float within the schedule, is not for the exclusive use of either the CITY or the CONTRACTOR, but is a jointly owned expiring resource available to and shared by both parties. Pursuant to this float sharing requirement, use of float suppression techniques shall be cause for rejection of the schedule and any revisions or updates.

E. Time extensions shall not be granted nor delay damages paid until a delay occurs which is beyond the control and without the fault or negligence of the CONTRACTOR and its Subcontractors or Suppliers, at any tier, and which extends actual performance of the Work beyond the current Contract completion date and the completion date projected by the current, approved, updated schedule. If the delay occurs along a path, which the current approved Construction Schedule update projects late completion prior to addition of any CITY caused delay, then the time extension allowed will be only for the additional delay demonstrated by the approved Time Impact Analysis. Time extensions shall be granted only if they are clearly demonstrated by the CONTRACTOR through the submittal, within seven (7) calendar days after the delay occurs, of a Time Impact Analysis which demonstrates the estimated impact on the end date of the Work; is based upon the updated Construction Schedule current as of the month the delay occurred; and demonstrates that the delay cannot be mitigated, offset, or eliminated through such actions as revising the intended sequence of Work or other means.

If a time extension if granted by the CITY, the updated schedule reflecting the change shall become the baseline and be reflected schedule and must be shown and compared on all subsequent schedule submittals.

Since float time within the Construction Schedule is jointly owned, it is acknowledged that CITY caused delays on the project may be offset by CITY caused time savings (e.g. critical path submittals returned in less time than allowed by the Contract or approval of substitution requests which result in a savings of time to the CONTRACTOR). In such an event, the CONTRACTOR shall not be entitled to receive a time extension or delay damages until all CITY caused time savings are exceeded and the Contract completion date is also exceeded.

F. If the initial schedule submitted shows completion of Work more than thirty (30) calendar days in advance of the Contract completion date, the ENGINEER may, at no cost to the CITY, decrease the Contract duration by issuance of a Change Order which changes appropriate Milestone Date(s) and the Contract completion date to the completion date reflected on the schedule. Any approved schedule, revision, or update having an early completion date shall show the time between the early completion date and the Contract completion date as "project float".

G. Comments made by the ENGINEER on the schedule during review will not relieve the CONTRACTOR from compliance with all requirements of the Contract. The ENGINEER may request that the CONTRACTOR and all major Subcontractors (defined herein as being any Subcontractor, Sub-Subcontractor, or Supplier with five (5) percent or more of the value of the Contract) participate in review of any schedule submission. All revisions shall be submitted within seven (7) calendar days after the ENGINEER’S review.

H. Two copies of an updated schedule shall be submitted to the ENGINEER for approval with the submittal of each CONTRACTOR'S monthly payment request or the monthly payment request will be withheld. For those activities started but not yet completed at the time of submittal, the updated schedule shall reflect the

percentage complete, as agreed between the CONTRACTOR and the INSPECTOR, and an estimate of the remaining duration. The monthly update of the schedule shall include an updated bar chart with logic arrows or network diagram and include the same additional data as required by Section 1.C. If the CPM network option is used, the schedule shall be calculated using remaining durations and the progress override option. The monthly update shall also include a complete, hard copy list of all the changes made from the previously approved submittal. If the schedule is done using Primavera, use a Claim Digger report for the list of changes.

I. The submittal of an updated schedule which meets the requirements of this Section, accurately reflects the status of the Work (for all previously accepted activities), and incorporates all approved changes into the schedule, shall be a condition precedent to the processing of the monthly payment application. (Actual and/or forecast dates for status of additional submittal cycles shall be added without the prior approval of the Engineer.) Updated schedules shall also be submitted at such other times as the ENGINEER may direct. Upon approval of a Change Order or issuance of a notice to proceed with a change, the approved change shall be reflected in the next schedule update.

J. If completion of any part of the Work, delivery of equipment or materials, or submittal of CONTRACTOR submittals is behind schedule and will impact the end date of the Work, the CONTRACTOR shall submit a written recovery plan acceptable to the ENGINEER for completing the Work by the current Contract completion date, if requested by the ENGINEER.

K. As a condition precedent to the release of any retained funds, the CONTRACTOR shall, after substantial completion of the Work has been achieved, submit a certified, final schedule which accurately reflects the manner in which the project was constructed and includes actual start and completion dates for all activities on the schedule.

PART 2 – PRODUCTS (Not Used)

PART 3 – EXECUTION (Not Used)

END OF SECTION

THIS PAGE INTENTIONALLY LEFT BLANK

SECTION 01322

CONSTRUCTION PROGRESS PHOTOGRAPHY

PART 1 - GENERAL

1.1 REQUIREMENT

A. Provide photographs taken at the Jobsite at the specified stages of Contracted Work in accordance with provisions of this Section.

1. The CONTRACTOR shall provide the CITY with photos with addresses identifying each property location, the direction the photograph was taken (facing North, South etc).

2. Take first photographs just before CONTRACTOR starts any work operations at the Jobsite.

3. Take final photographs when all Contracted Work has been completed, regardless of time interval since previous photographs were taken.

1.2 SUBMITTALS

Except as otherwise directed by the ENGINEER, submit all photographs electronically on a CD/DVD organized by phase of construction and location.

1.3 QUALITY ASSURANCE

Photographs and prints to be of professional quality; clear, in focus, with high resolution and sharpness, and with minimum distortion.

PART 2 – PRODUCTS (Not Used)

PART 3 – EXECUTION (Not Used)

END OF SECTION

THIS PAGE INTENTIONALLY LEFT BLANK

SECTION 01323

CONSTRUCTION STATUS REPORTS

PART 1 - GENERAL

1.1 REQUIREMENT

A. Daily Status Report

The CONTRACTOR shall complete a daily report indicating manpower, major equipment, subcontractors, unusual occurrences and etc., involved in the performance of the work. The daily report shall be completed on forms prepared by the CONTRACTOR and approved by the CITY and shall be submitted to the Project Manager at the conclusion of each work week.

The CONTRACTOR shall also have workers on the project sign in and out each day on the CITY of Redlands Daily Sign In Sheet which shall state the name, times in and out and the work performed by each worker on the project each day. The completed Daily Sign In Sheets shall be submitted to the CITY of Redlands Project Manager at the end of each work week. Failure to submit daily reports and daily sign in sheets to the Project Manager on a weekly basis will result in a possible and temporary suspension of work until reports are submitted.

B. Weekly Status Report

During the construction phase of the Work, the CONTRACTOR shall submit weekly written status reports to the ENGINEER and the INSPECTOR. The report shall contain a record of inspections and tests, not performed by CITY forces, for all Work accomplished subsequent to the previous report and shall include the following information:

1. Type of work under way during the time frame of the report (e.g., earthwork, concrete work, structural steel erection, equipment manufacturing, component installation).

2. Identify inspections and tests performed, location of inspections and tests that were made, and result of inspections.

3. Reports of tests performed, including those specified, with the results of the tests, and acceptance criteria, including failures and remedial action to be taken. Test results, including all computations, shall be attached to the report form. Where test results cannot be completed by the time the report is submitted, a notation shall be made that the test was performed, including the approximate expected date that test results will be reported.

4. Report of any nonconforming items/activities. Nonconformance report forms designed solely for this purpose shall be utilized.

5. Results of inspections of material and equipment done upon their arrival at the Jobsite and prior to their incorporation into the Work. This includes, but is not limited to, compliance with approved submittals, damage, and proper storage requirements.

6. Offsite quality control activities.

7. Instructions received from the ENGINEER or INSPECTOR.

8. In all cases, the report must be verified and signed by the CONTRACTOR'S representative. The verification is to contain the statement that all supplies and materials incorporated in the Work are in compliance with the terms of the Contract except where noted.

C. 3 Week Look Ahead Schedule

During the construction phase of the Work, the CONTRACTOR shall submit 3 Week Look Ahead reports to the ENGINEER at the weekly progress meetings or as directed by the ENGINEER. The report shall include the following information:

1. Type of work under way during the time frame of the report (e.g., earthwork, concrete work, structural steel erection, equipment manufacturing, component installation).

D. Miscellaneous Submittals

CONTRACTOR shall prepare a Daily Construction Report recording the following information concerning events at the job-site and submit original copies to the ENGINEER at weekly intervals for approval:

1. List of Subcontractors and Sub-Subcontractors at the site, types of works and job location.

2. Count of CONTRACTOR'S personnel at the site, name, type of work, hours completed and job location.

3. Construction equipments at the site.

4. High and low temperatures, general weather conditions.

PART 2 – PRODUCTS (Not Used)

PART 3 – EXECUTION (Not Used)

END OF SECTION

SECTION 01330

SUBMITTALS

PART 1 - GENERAL

1.1 REQUIREMENT

A. The CONTRACTOR shall furnish a schedule and list of all required submittals to the ENGINEER, including required submittals by all Subcontractors.

B. Wherever called for in these Specifications or on the plans, or where required by the ENGINEER, the CONTRACTOR shall furnish to the ENGINEER for review, two (2) hard copies and one electronic (PDF) copy of each submittal. The term "submittal" as used herein shall be understood to include detail design calculations, design drawings, shop drawings, fabrication and installation drawings, erection drawings, lists, graphs, operating instructions, catalog sheets, data sheets, samples, and similar items. Unless otherwise required, said submittals shall be submitted to the ENGINEER at a time sufficiently early to allow review of same by the ENGINEER and to accommodate the rate of Construction Progress required under the Contract without delaying the Contract Work and with due regard for the possibility of resubmittals. All submittals shall be in English.

C. All design or shop drawings or other submittals shall be accompanied by a transmittal form for each submittal. Any submittal not accompanied by such a form may be returned, at the ENGINEER'S discretion, for resubmittal.

D. Normally, a separate transmittal form shall be used for each specific item or class of material or equipment for which a submittal is required. Transmittal of a submittal of various items using a single transmittal form will be permitted only when the items taken together constitute a manufacturer's "package" or are so functionally related that expediency indicates a review of the group or package as a whole. A multiple-page submittal shall be collated into sets, and each set shall be stapled or bound, as appropriate, prior to transmittal to the ENGINEER.

E. Shop Drawings shall show in detail the size, sections, and dimensions of all the member(s); the arrangement and construction of all connections and joints; all holes, straps, and other fittings required for attaching work and other pertinent details. When required, engineering computations shall be submitted. The CONTRACTOR shall be responsible for delivering reviewed copies of shop Drawings to all others whose work is dependent thereon. The CONTRACTOR shall maintain at the site of the Project, at all times, a complete file of approved Shop Drawings and manufacturers' data for this Project.

F. Except as may otherwise be provided herein, the ENGINEER will return prints of each submittal to the CONTRACTOR, with its comments noted thereon, within twenty (20) calendar days following their receipt by the ENGINEER. It is considered reasonable that the CONTRACTOR shall make a complete and acceptable submittal to the ENGINEER by the second submission of a submittal

item. The CITY reserves the right to withhold moneys due the CONTRACTOR to cover additional costs of the ENGINEER'S review beyond the second submittal. Submittal will be returned to the CONTRACTOR with one of four (4) markings:

1. If a submittal is returned to the Contractor marked "NO EXCEPTIONS," formal revision and resubmission of said submittal will not be required.

2. If a submittal is returned to the Contractor marked "EXCEPTIONS NOTED," formal revision and resubmission of said submittal will not be required, unless specifically requested.

3. If a submittal is returned to the CONTRACTOR marked "RETURNED FOR CORRECTION," the CONTRACTOR shall revise said submittal and shall resubmit the originally required number of copies of said revised submittal to the ENGINEER.

4. If a submittal is returned to the CONTRACTOR marked "NOT ACCEPTABLE," the CONTRACTOR shall revise said submittal and shall resubmit the originally required number of copies of said revised submittal to the ENGINEER.

G. All Work for which Shop Drawings are required shall be performed in accordance with the reviewed and approved copies. Fabrication of an item shall not commence before the ENGINEER has reviewed the pertinent submittal and returned the copies to the CONTRACTOR marked either "NO EXCEPTIONS TAKEN," or "MAKE CORRECTIONS NOTED". Revisions indicated on submittals shall be considered as changes necessary to meet the requirements of the Contract Documents and shall not be taken as the basis for claims for extra work.

H. All CONTRACTOR submittals shall be carefully reviewed by an authorized representative of the CONTRACTOR prior to submission to the ENGINEER. Each submittal shall be dated, signed, and certified by the CONTRACTOR as being correct and in strict conformance with the Contract Documents. No consideration for review by the ENGINEER of any CONTRACTOR'S submittal will be made for any items which have not been so certified by the CONTRACTOR. All noncertified submittals will be returned to the CONTRACTOR without action taken by the ENGINEER, and any delays caused thereby shall be the total responsibility of the CONTRACTOR.

I. Should the Shop Drawings or manufacturers data (for submittals required by the Standard Specifications or the specifications) show variations from the Contract requirements, the CONTRACTOR shall make specific mention of such variations in the letter of transmittal, in order that, if acceptable, suitable action may be taken for proper adjustment of the Contract; otherwise the CONTRACTOR will not be relieved of the responsibility for executing the work in accordance with the Contract Documents, and the approved submittals.

J. The ENGINEER'S review of CONTRACTOR'S submittal shall not relieve the CONTRACTOR of the entire responsibility for the correctness of details and dimensions and conformance to the Specifications. The CONTRACTOR shall assume all responsibility and risk for any misfits due to any errors in the

submittal. Any fabrication or other work performed in advance of the receipt of accepted submittals shall be entirely at the CONTRACTOR'S risk and expense. The CONTRACTOR shall be responsible for the dimensions and the design of adequate connections and details.

K. CONTRACTOR'S Coordination:

1. ENGINEER will return and will not review unrelated submittals.

2. The CONTRACTOR may be required to provide drawings, setting diagrams and similar information necessary for proper coordination of Contracted Work. Such data shall remain between the CONTRACTOR and CONTRACTOR'S Subcontractor and will not be reviewed by the ENGINEER unless specifically called for in the Contract Documents.

3. ENGINEER will not review any required Structural Shop Drawings, Structural Calculations, etc., not prepared or signed by a State of California licensed ENGINEER.

4. ENGINEER will return and will not review any submittal requiring coordination with other submittals until such other submittals or required information is received by the Consultant or ENGINEER.

L. CONTRACTOR'S Submittals: CONTRACTOR'S submittals required for performance of Contracted Work, shall include, but are not limited to, the following:

1. Schedule of Values for all Lump Sum items within the Proposal.

2. Construction Schedule and Notification to ENGINEER of completion of each milestone or percentage increment of the Work as required.

3. Submittal Schedule

4. Daily Construction Reports

5. Shop Drawings and Structural Calculations.

6. Manufacturer's Data and Specifications.

7. Samples

8. Templates

9. Certificate of Compliance

10. Construction Photographs

11. Substitutions

12. Record Drawings and Record Project Manual

13. Operation & Maintenance Manuals

14. Stock Materials, Spare parts, tools

15. Material Testing Results

16. Maintenance Logs and Maintenance Schedule.

M. CONTRACTOR shall conform to the provisions of the Contract Document and as may be specifically directed by the ENGINEER.

1. Preparation and processing of submittals shall be coordinated with Contracted Work operations, which include fabrication, purchasing and delivery of work items so as not to delay Contracted Work operations.

2. In each copy of the Submittal, mark every applicable material, product, equipment, manufacturer's data, product information, color samples, rating or values, part and model numbers, etc. by red color circle. Each of the submittal items must be clearly distinguishable from other unrelated or similar items listed in the Manufacturer's Catalog or Technical Specifications, Manuals, etc.

N. Coordination and Submittals:

1. Carefully review and coordinate all aspects of each item being submitted.

2. Carefully review contract drawings and technical sections, verify all work as laid out or indicated meeting the applicable codes and standards.

3. Ensure ample time for reviewing and processing of the submittals by the CITY or other authorized agencies, delays resulting from improper and untimely submittals shall be the responsibility of the CONTRACTOR.

4. Verify that all such submittal items conform to the Project Manual requirements noted in the Technical Sections.

5. Verify all site conditions and provide all required dimensions and measurements in Shop Drawings.

6. Where necessary, review the CITY'S comments, make changes and resubmit to local governing agencies for approval. Furnish the ENGINEER copies of the approved plans or drawings for review.

O. CONTRACTOR shall affix to each submittal, the CONTRACTOR'S signature certifying that required coordination has been performed and include on an attached label for processing and recording action taken, noting the following:

1. Name of the Project

2. Date of the Submittal

3. Name and address of Consultant
4. Name and address of the CONTRACTOR
5. Name and address of the Subcontractor(s)
6. Name and address of the Supplier
7. Name and address of the Manufacturer
8. Reference to Specification Section Number and Title
9. Reference to Drawing Sheet Number and detail(s)
10. Submittal Number
11. Priority Number and expected return date.

PART 2 – PRODUCTS (Not Used)

PART 3 – EXECUTION (Not Used)

END OF SECTION

THIS PAGE INTENTIONALLY LEFT BLANK

THE CITY OF REDLANDS
MUNICIPAL UTILITIES AND ENGINEERING DEPARTMENT

SUBMITTAL COVER SHEET

Project Name:		**Submittal Number:**	
Project Number:		**Date of Submittal:**	
Submitted By:			

Submittal Title:	

Priority Type (Select One):	☐ Low	☐ Normal	☐ High

Submittal Type (Select One):	☐ Pre-Construction	☐ Post-Construction

Category (Select One):	
☐ Product Data	☐ Close-Out
☐ Shop Drawing	☐ Warranty
☐ Mock Up	☐ Test Report
☐ Sample	☐ Operation / Maintenance Manual
☐ Certification	☐ MSDS – Material Safety Data Sheets
☐ As-Built	

THE CITY OF REDLANDS
MUNICIPAL UTILITIES AND ENGINEERING DEPARTMENT

REQUEST FOR INFORMATION (RFI)

Project Name:		**RFI Number:**	
Project Number:		**Date of RFI:**	
Submitted By:			

RFI Title:	

Work Impact? (Select One):	☐ No	☐ Unknown
	☐ Yes – Work Impeded	☐ Yes – Work Stopped

Question:

Proposed Solution (Optional):

Requestor:

Signature: _____

Title: _____ **Date:** _____

SECTION 01572

EROSION CONTROL PLAN

PART 1 - GENERAL

1.1 REQUIREMENT

CONTRACTOR shall comply with all laws, codes, ordinances and requirements of governing agencies regarding the discharge of pollutants, air and water pollution control and any other requirements for this project. Within 5 days of the Notice to Proceed, CONTRACTOR shall submit two (2) hardcopies of the draft Erosion Control Plan to the CITY for review. Any corrections or changes shall be made to the Erosion Control Plan, approved by the ENGINEER and implemented prior to any construction work on this project. The plan shall be updated as necessary or required for compliance purposes.

Payment for work on this item shall be made as a percentage of work completed at each monthly payment. All work under this item shall be as shown on the approved drawing accepted by the CITY prior to any work on the project. The CONTRACTOR shall have all work installed and inspected by the CITY prior to any work on the project.

Full compensation for this item shall be in accordance with all state and federal NPDES rules, regulations, requirements, and laws and shall constitute all work for providing, installing, maintaining and removing all work as required for all excavations, earthwork, grading, grinding, paving, concrete, runoff containment, and any other work performed within the project boundaries.

PART 2 – PRODUCTS (Not Used)

PART 3 – EXECUTION (Not Used)

END OF SECTION

THIS PAGE INTENTIONALLY LEFT BLANK

SECTION 01581

CONSTRUCTION INFORMATION SIGNS

PART 1 - GENERAL

1.1 REQUIREMENT

The CITY shall provide the CONTRACTOR with all required construction information signs for the project. The signs shall be installed at the locations noted in the plans, if included, or as otherwise directed by the ENGINEER. If the project consists of numerous sites, the construction information signs shall be relocated to each site as work progresses. The construction signs shall be installed the same day work commences on any construction site. If the sign is not installed prior to construction work beginning at a subsequent site, the CITY will install the information signs at the CONTRACTOR'S expense.

The installation of each sign shall be the responsibility of the CONTRACTOR to include mounting posts, hardware and any related incidentals to ensure the sign is placed in a safe and secure manner. For any sign required for multiple site projects, where the sign is frequently relocated and not anticipated to be installed in the ground on posts, the CONTRACTOR shall provide a Type III barricade for mounting. The CONTRACTOR shall obtain approval from the ENGINEER following installation of the construction information sign. If the signs are installed in the ground with posts, proper vertical clearance shall be provided. The minimum vertical clearance shall be six feet within a parkway area and seven feet within the sidewalk.

The construction information sign shall remain visible at all times. The CONTRACTOR shall replace stolen signs at their expense and maintain the signs, ensuring all graffiti, soil, paint, etc. is removed from the sign immediately. Upon completion of the project, each sign shall be removed and returned to the CITY. If the sign is not returned to the CITY at the completion of the project in the original condition, the cost of the sign shall be withheld from the final progress payment.

The CONTRACTOR shall notify Underground Service Alert (Dig alert) at least 2 working days, but not more than 14 calendar days, prior to performing any excavation.

Full compensation for furnishing all labor, equipment, materials, and tools required to perform the tasks noted above, and as ordered by the ENGINEER, shall be considered as being included in the various Contract items of work and no separate or additional compensation will be allowed therefore.

PART 2 – PRODUCTS (Not Used)

PART 3 – EXECUTION (Not Used)

END OF SECTION

THIS PAGE INTENTIONALLY LEFT BLANK

SECTION 01721

MOBILIZATION

PART 1 - GENERAL

1.1 REQUIREMENT

A. General

Whether Mobilization is included as a Contract Bid Item in the Bid Proposal Form or specified as part of the lump sum in the Contract Documents, the cost of labor, equipment, materials and incidentals for doing all the work in mobilization (in advance of construction operations and not directly attributable to any specific bid item) shall be included in the Contract Price Breakdown and progress payment estimate. If there is no mobilization bid item the CONTRACTOR shall submit to the INSPECTOR for approval the Contract Price Breakdown with the amount established for mobilization.

Mobilization shall include, but not be limited to, the following items, all as required for the proper performance and completion of the Work:

1. Obtaining all permits, licenses, insurance, and bonds. Providing copies to the ENGINEER.

2. Moving onto the Jobsite all of CONTRACTOR'S plant and equipment as required.

3. Erecting temporary buildings and other construction facilities.

4. Installing temporary construction power and wiring.

5. Establishing fire protection system for its temporary facilities.

6. Developing construction water supply.

7. Providing field office trailers for the CONTRACTOR, complete with all specified equipment, furnishings, utility services and required approvals from the CITY.

8. Providing sanitary facilities or connecting to onsite sanitary facilities as specified.

9. Providing for potable water facilities as specified. This includes a means by which all on site CONTRACTOR, Subcontractor or supplier personnel can wash their hands with soap.

10. Arranging for, and erection of, CONTRACTOR'S work and storage yards and sheds.

11. Submitting all required Subcontractor insurance certificates and bonds.

12. Posting all CAL/OSHA required notices and establishment of safety programs.

13. Furnishing of Construction Schedule, Contract Price Breakdown and Submittal Schedules.

14. Erecting all temporary fencing, including removal and disposal of existing temporary fencing.

PART 2 – PRODUCTS (Not Used)

PART 3 – EXECUTION (Not Used)

END OF SECTION

SECTION 01722

SURVEYING

PART 1 – GENERAL

1.1 REQUIREMENT

A. General

1. The CONTRACTOR shall be responsible for all surveys required to layout the Work and for the accuracy of all survey work for construction. The CONTRACTOR shall include the cost of all such survey work in their Bid. The CONTRACTOR shall have all construction surveying performed by a `Licensed Land Surveyor' or a `Civil Engineer' registered by the State of California to perform such work. The ENGINEER reserves the right to verify all survey work done by the CONTRACTOR.

2. The CONTRACTOR shall preserve the initial survey control points for the duration of their usefulness. Monumentation that is subject to disturbance or destruction shall be located and referenced prior to construction and relocated and referenced if necessary after construction, in accordance with the following requirements.

B. Construction Surveys

1. The CONTRACTOR shall provide all reference stakes and form checks necessary for construction and inspection of improvements. All construction staking shall be documented in cut sheets and provided to the ENGINEER. This staking may include but is not limited to: removals, joins, rough grade, slope, utilities, storm drains, sewers, curbs, walks, paving, wall and building stakes; and any other staking necessary for construction and inspection.

C. Reference Or Grade Stakes

1. A reference or grade stake shall be set for each grade change or angle point shown on the plan, standard plan, and shop drawing, in addition to the normal staking interval.

D. Form Checks

1. Forms shall be checked when durable points may be disturbed, removed, or are impractical to be used to verify the design location. The measured location shall be recorded in the survey field notes. All variations from the plan location shall be brought to the attention of the ENGINEER.

E. Staking Intervals And Offset Stake Lines

1. All staking intervals shall be in accordance as directed by the ENGINEER. Stake lines shall be set at an offset distance from the improvement to ensure proper grade, station, and alignment.

F. Utility Stakes

1. The CONTRACTOR shall provide stakes for all utilities, public or private, that require location or relocation, unless otherwise stated.

G. Additional Survey Work

1. The CONTRACTOR may be required to furnish additional survey work, such as profiles, restakes, Change Orders, etc., at the request of the ENGINEER or the INSPECTOR.

H. Accuracy

1. The CONTRACTOR shall use appropriate surveying methods to obtain the following standards: For fixed works (i.e. cast-in-place concrete; asphalt pavement, pipes and drains; and other items determined by the ENGINEER) the following survey standards shall be used. The absolute horizontal accuracy, in relationship to the Engineer's control, shall be such that the semimajor axis of its 95% error ellipse is ±0.015 foot or less. The absolute vertical accuracy, in relationship to the Engineer's control, shall be such that its standard deviation is ±0.015 foot or less. The relative horizontal accuracy of survey points within the Project shall be such that the semimajor axis of its 95% error ellipse is ±0.015 foot or less. The relative vertical accuracy of survey points within the Project shall be such that its standard deviation is ±0.015 foot or less.

2. For excavation purposes, the following survey standards shall be used. The absolute horizontal accuracy, in relationship to the Engineer's control, shall be such that the semimajor axis of its 95% error ellipse is ±0.1 foot or less. The absolute vertical accuracy, in relationship to the Engineer's control, shall be such that its standard deviation is ±0.1 foot or less. The relative horizontal accuracy of survey points within the Project shall be such that semimajor axis of the 95% error ellipse is ±0.1 foot or less. The relative vertical accuracy of survey points within the Project shall be such that its standard deviation is ±0.1 foot or less.

I. Survey/INSPECTOR

1. The CONTRACTOR shall provide to the INSPECTOR those measurements and control points necessary to determine the location and conformance to the plan, line, and grade of the improvements necessary for inspection purposes.

J. Survey Notes

1. The CONTRACTOR shall supply and keep notes on CITY standard format note sheets. The ENGINEER may request copies of, and

otherwise review, survey notes at any time during the construction phase of the Project. Upon completion of the Project, the original survey notes shall become the property of the CITY and shall be delivered to the ENGINEER

1.2 MONUMENT PRESERVATION GUIDELINES

A. New & Reconstruction Projects

1. Prior to Construction

    a. The public survey records are to be researched for the location of all possible survey monuments within the scope of the project and copies shall be furnished to the survey crew.

    b. The survey crew shall diligently search for all survey monuments of record above or below the surface, within the road right-of-way. It is suggested that this search would include the use of a metal detector. When the detector indicates the possibility of a buried survey monument, then digging below the surface to uncover the monument is required.

    c. The survey crew shall properly reference all found survey monuments, which may be disturbed or covered during construction, to stable surface points.

    d. The authorized surveyor shall properly complete a Corner Record or Record of Survey for the monuments noted in item c, above. Prior to the start of any construction work, the original or a print of the Corner Record or Record of Survey shall be submitted to the County Surveyor for review, signature and filing. A copy shall also be provided to the CITY prior to the start of construction to provide documentation that the requirement is met.

2. After Construction and Prior to Notice of Completion

    a. All covered and disturbed monuments shall be reset with the same or more durable type of monument as the original, in the surface of the construction. Key monuments shall be a minimum 1” inside diameter iron pipe of appropriate length.

    b. A monument box or other protective structure is recommended to be placed around key monuments (section corners, quarter section corners).

    c. The authorized surveyor shall properly completes a Corner Record or Record of Survey for all set monuments with a change in character, including tag number, and submit it to the County Surveyor for review, signature and filing. A copy shall also be provided to the CITY prior to the Notice of Completion to provide documentation that the requirement is met.

B. Overlay Projects

1. Prior To Construction

   a. The public survey records are to be researched for the location of all possible survey monuments within the scope of the project and copies shall be furnished to the survey crew.

   b. The survey crew shall diligently search for all survey monuments of record and on the surface of the road. It is suggested the search would include the use of a metal detector. When the detector indicates the possibility of a buried survey monument, then digging below the surface to uncover the monument within 2" of the road surface is recommended.

   c. The survey crew shall properly reference found survey monuments, which may be disturbed or covered during construction, to stable surface points.

   d. The authorized surveyor shall properly complete a Corner Record or Record of Survey for the monuments noted in item 3, above. Prior to the start of any construction work, the original or a print of the Corner Record or Record of Survey shall be submitted to the County Surveyor for review, signature and filing. A copy shall also be provided to the CITY prior to the start of construction to provide documentation that the requirement is met.

2. After Construction and Prior to Notice of Completion

   a. All covered or disturbed monuments and surface monuments are reset in the new road surface, or a new monument is set in the new road surface above the buried one.

   b. All existing monument boxes will be adjusted to grade or replaced, as appropriate.

   c. A monument box or other protective structure should be placed around key monuments (section corners, quarter section corners).

   d. The authorized surveyor shall properly complete a Corner Record or Record of Survey for all set monuments and existing monuments with a change in character, including tag number and submits it to the County Surveyor for review, signature and filing. A copy shall also be provided to the CITY prior to the Notice of Completion to provide documentation that the requirement is met.

C. Slurry Seal Projects

1. Prior To Construction

   a. The public survey records are to be researched for the location of all possible survey monuments within the scope of the project and copies furnished to for the survey crew.

b. All monument boxes shall be located and steps taken to ensure that the survey monuments inside are readily accessible upon completion of the project.

c. The survey crew shall diligently searches for survey monuments on the surface of the roadway, and identify said monuments recovered in the field to ensure that they will be protected. The survey crew shall inventory the monuments recovered in the field in a manner that allows for their recovery and inspection after construction.

2. After Construction and Prior to Notice of Completion

a. All monument boxes shall be inspected, and appropriate action taken when needed, to ensure that the survey monuments inside are readily accessible.

b. The survey crew shall review the inventory of found monuments by field inspection to ensure that all survey monuments are clean and exposed. Those monuments covered after construction is completed shall be uncovered.

D. Monument Tie Preservation

1. Prior To Construction

a. All existing survey monument ties within the scope of the project shall be researched and identified prior to construction. Surveyor may obtain existing tie sheets from the CITY as available.

b. If it is determined that all ties for a survey monument may be disturbed during construction, the Surveyor shall relocate the monument ties prior to construction, within improvements that will not be disturbed, and file the revised tie sheet with the CITY. A minimum of three tie points should reference each centerline monument, whenever possible

2. After Construction and Prior to Notice of Completion

a. If it is determined that the result of construction will not disturb all survey monument ties for a specific monument, the Surveyor shall replace all monument ties disturbed during construction per the following guidelines:

i. Monument ties shall be placed during the finishing process of the concrete improvements.

ii. Monument ties shall be set below the elevation of the adjacent top of curb to provide protection from any future cleaning, maintenance or work around the tie.

iii. A minimum of three tie points should reference each centerline monument, whenever possible.

b. Once the construction is complete, the Surveyor shall prepare a revised tie sheet, and file with the CITY for all monument ties disturbed during the construction.

PART 2 – PRODUCTS (Not Used)

PART 3 – EXECUTION (Not Used)

END OF SECTION

SECTION 01732

POTHOLING

PART 1 - GENERAL

1.1 REQUIREMENT

A. The CONTRACTOR shall conduct exploratory excavations by potholing to verify or to discover the actual locations and the size of existing underground utilities and improvements. The CONTRACTOR shall take care not to damage existing facilities during potholing operations. Any utility or existing facility (including those located by Underground Service Alert - USA) within 3 feet of any trench or excavation shall be potholed prior to starting the contract work in the vicinity. Potholing shall be done in each given area where excavation work is to occur at least fourteen (14) calendar days in advance of any excavation or construction in that area, to avoid possible delay in the progress of the Work.

B. Potholing shall consist of excavations at the locations of utilities or other underground facilities indicated on the Drawings, located by USA, or as directed by the ENGINEER. All costs of potholing operations for the utilities indicated on the Drawings shall be included in the CONTRACTOR'S Bid.

C. If an allowance for "Additional Potholing" has been established and included in the SCHEDULE OF WORK AND PRICES, this allowance shall only be used to reimburse the CONTRACTOR for potholing utilities not shown or otherwise referenced on the drawings, or as directed by the ENGINEER. If the total cost of the Work directed under the Additional Potholing allowance differ from the amount set forth in the SCHEDULE OF WORK AND PRICES, the Contract Price shall be adjusted by a Change Order. The adjustment shall be the difference between the total actual costs and the amount included in the Bid, as an additional amount due to the CONTRACTOR or a credit to the CITY, as appropriate.

D. In addition to the potholes indicated on the Drawings, or directed by the ENGINEER, the CONTRACTOR may opt to do further potholing deemed necessary at no additional cost to the CITY.

E. Potholing operations shall conform to all applicable requirements as to sidewall slopes, sheeting and shoring, and all other excavation and trenching provisions specified herein.

F. Potholes shall be identified and protected in accordance with the ENGINEER'S instructions, the California Manual on Uniform Traffic Control Devices (MUTCD) and Work Area Traffic Control Handbook (WATCH) Standards.

G. The CONTRACTOR'S proposed method of potholing and schedule for potholing shall be submitted to the ENGINEER for approval, at least thirty (30) days prior to the commencement of operation. Any utilities damaged during potholing shall be

immediately reported to the ENGINEER and INSPECTOR and repairs made immediately in accordance with the specifications.

H. A complete log of all potholes shall be kept by the CONTRACTOR, showing specific locations and dimensions of trenches. The log shall be verified by the INSPECTOR prior to the backfilling of the potholes. The verified log will be submitted to the ENGINEER and the INSPECTOR within two (2) working days after completion of potholing in each area. Payment for potholing utilities not shown or otherwise referenced on the drawings, or as directed by the ENGINEER will not be made unless these potholes are listed on the verified log.

I. The CONTRACTOR shall record the coordinates, elevations and dimensions of all utilities and improvements verified or discovered by potholing. The records shall be submitted to the ENGINEER within two (2) working days after the completion of potholing in each area. The records shall also include dates of the potholing operations and any additional discovered information or pertinent data.

J. Upon completion of potholing in each area, and after verification of the logs by the INSPECTOR, potholes shall be immediately backfilled and compacted in accordance with the specifications, or restored as directed by the ENGINEER.

PART 2 – PRODUCTS (Not Used)

PART 3 – EXECUTION (Not Used)

END OF SECTION

SECTION 01740

DEMOBILIZATION

PART 1 - GENERAL

1.1 REQUIREMENT

A. General

Whether Demobilization is included as a Contract Bid Item in the Bid Proposal Form or specified as part of the lump sum in the Contract Documents, the cost of labor, equipment, materials and incidentals for doing all the work in demobilization (upon completion of all contract work and not directly attributable to any specific bid item) shall be included in the Contract Price Breakdown and progress payment estimate. If there is no demobilization bid item the CONTRACTOR shall submit to the INSPECTOR for approval the Contract Price Breakdown with the amount established for demobilization.

Demobilization shall include, but not be limited to, the following items, all as required for the proper performance and completion of the Work:

1. Moving off of the Jobsite all of CONTRACTOR'S plant and equipment as required.

2. Dismantling and removing all temporary buildings and other construction facilities.

3. Dismantling and removing all temporary construction power and wiring.

4. Removing all sanitary facilities from the work site.

5. Remove all waste, debris, and rubbish caused by construction operations within the work area, adjacent properties and public roads.

6. Materials and equipment shall be removed from the site as soon as they are no longer necessary. Before the final inspection, the site shall be cleared of equipment, unused materials and rubbish so as to present a satisfactory clean and neat appearance. All cleanup costs shall be included in the CONTRACTOR'S Bid.

7. Dismantling and removal of all temporary fencing.

8. Provide CITY with all required As-Built drawings.

9. All required Corner Records have been filed with the County and all copies provided to the CITY per Section 01722 Surveying.

10. All items noted within the final inspection ("Punchlist") have been completed to the satisfaction of the CITY.

11. All project photographs as required within Section 01322 Construction Progress Photography have been provided.

12. Notice of Completion (NOC) will not be filed until all work is complete per this Section 01740.

PART 2 – PRODUCTS (Not Used)

PART 3 – EXECUTION (Not Used)

END OF SECTION

TECHNICAL SPECIFICATIONS

THIS PAGE INTENTIONALLY LEFT BLANK

SECTION 02050

DEMOLITION AND SALVAGE

PART 1 - GENERAL

1.01 DESCRIPTION

A. The Contractor shall furnish all materials, equipment and labor necessary to perform complete demolition operations as shown on the contract drawing and as specified by this section. Approximate quantity of materials to be demolished are indicated on the contract drawing, but it is the Contractor's responsibility to visit the site prior to submitting a bid to verify actual quantities. No increase in compensation will be allowed for the demolition effort if the actual quantities exceed the approximate numbers indicated on the drawings. The contract drawings show the Design Engineer's general intent regarding items to be removed and/or limits of demolition, and may not show every item that is to be removed as part of that indicated "general intent".

B. Items indicated to be salvaged are identified on the contract drawings. Contractor shall coordinate with the City of Redlands for delivery and storage requirements for salvaged items.

C. The demolition contractor shall exercise special care to not disturb any item on the contract drawing that is indicated to "remain".

D. Do not begin demolition until authorization has been received from the Engineer.

E. The Contractor shall cut back flush and remove exposed framing, roofing, piping, conduits, fixtures, junction boxes, light fixtures, water fixtures, and supports per the demolition. Concealed or buried piping or conduits shall be removed or capped and abandoned as necessary to facilitate new construction.

F. Before completion of the Work, the Contractor shall submit an Affidavit of Legal Disposal attesting to the lawful disposal of all demolished materials.

G. Contractor shall remove and dispose of all items designated for demolition.

1.02 QUALITY ASSURANCE

A. General: All work shall be performed in accordance with the local building codes, State Industrial Safety Orders and requirements of the Occupational Safety and Health Act requirements.

B. Protection: Demolition shall be performed in such manner as to not harm adjacent structures, utilities, systems, equipment, existing landscaping or natural vegetation. The Contractor shall assume full responsibility for such disturbance. All costs for such repair, rehabilitation, or modifications shall be incurred by the Contractor at no additional cost to the City of Redlands.

C. Contractor shall provide safeguards, including warning signs, barricades, temporary fences, warning lights, interior or exterior shoring, bracing, or supports, and other

similar items that are required for the protection of all personnel during the demolition and removal activities.

D. Contractor shall maintain fences, barricades, lights, and other similar items around exposed excavations until such excavations have been completely filled.

E. Prevent spread of flying particles and dust. Contractor shall sprinkle rubbish and debris with water to keep dust to a minimum.

PART 2 - PRODUCTS (NOT APPLICABLE)

PART 3 - EXECUTION

3.01 GENERAL REQUIREMENTS

A. The Contractor shall notify the Engineer when demolition and removal activities are complete.

3.02 PERFORMANCE

A. Demolition: Completely demolish and remove equipment shown, including all appurtenances related or connected thereto, as noted below:

1. All equipment, material, and piping, within the limits of the demolition, excavations, backfills and construction debris, will become the property of the Contractor and shall be removed from the project site and shall be disposed of off the property in suitable depositories, in conformance with regulatory requirements and permits (if any are required). Any salvage value of this equipment, materials, and piping shall be reflected in the contract price of the demolition work.
2. Where adjoining structures are to be kept in place, the demolition limit lines shall be neatly saw-cut. Sections to be removed shall be broken out, and the remaining face shall be chipped back to the saw-cut line. The Contractor shall do the necessary work to provide the remaining face with a finish compatible with the surrounding surfaces, unless otherwise indicated.
3. Existing buildings, structures, boxes, pipes, pavements, curbs, and other items are to be removed, altered, and disposed of as specified herein or indicated on the drawings.
4. Remove and dispose offsite, facilities to be demolished in their entirety including all below ground footings, foundations, and other associated appurtenances, as shown on the drawing or as specified herein.
5. No blasting will be permitted.

B. Equipment and Piping Removal: All equipment and piping to be removed shall be properly disconnected from structures, piping, electrical and instrumentation systems. The Contractor shall do all resurfacing and other work as necessary to comply with the above requirements.

C. Pavement Removal: All pavements shall be saw-cut on a neat line at right angles to the curb face.

D. Utility Interference: Where existing utilities interfere with the prosecution of the work, Contractor shall relocate them.

E. Electrical Equipment Removal: All electrical equipment, conduit, wiring, etc. to be removed shall be properly de-energized, made safe, and disconnected from all sources of power prior to demolition.

F. Unless otherwise noted, remove existing electrical materials and equipment from areas indicated for demolition. Remove materials no longer used, such as studs, straps, and conduits. Remove or cut off concealed or embedded conduit, boxes, or other materials and equipment to a point at least 3/4-inch below the final finished surface. Remove existing unused wires.

3.03 SALVAGE

A. Items indicated to be salvaged are identified on the contract drawings.

B. Contractor shall coordinate with the City of Redlands for delivery and storage requirements for salvaged items.

3.04 BACKFILL

A. Holes, trenches or depressions in the ground remaining after demolition of structures, pipelines, or equipment shall be filled with compacted backfill materials as specified in Section 02350. After fill and compaction, surfaces shall be graded to meet adjacent contours and to provide flow to surface drainage structures, or as indicated.

3.05 PATCHING AND REPAIRING

A. The Contractor shall provide patching, repaving, and refinishing of damaged areas involved in demolition as necessary to match the existing adjacent surfaces and in compliance with the Standard Specifications for Public Works Construction "Greenbook" and as indicated on the contract drawings.

B. The Contractor shall repair all damages caused to adjacent facilities by demolition at no additional cost to the City.

C. After patching and repairing has been completed, the Contractor shall carefully remove splatterings of concrete from adjoining work (plumbing fixtures, trim, tile, and finished metal surfaces) and repair any damage caused by such cleaning operations.

3.06 CLEAN-UP

A. The Contractor shall leave site in clean condition satisfactory to the Engineer. Clean-up shall include but not be limited to disposal of all items, materials, debris and rubbish not required to remain property of the City of Redlands. Contractor shall remove items, material, debris, and rubbish to a legal off-site landfill.

*** END OF SECTION ***

THIS PAGE INTENTIONALLY LEFT BLANK

SECTION 02110

SITE PREPARATION

PART 1 - GENERAL

1.01 DESCRIPTION

A. This work shall consist of clearing, grubbing, removal and disposal of existing vegetation and miscellaneous items including, but not limited to shrubs, trash and other items within the limits of construction to facilitate construction of the new facility.

B. This work shall also include, but not be limited to grading, subgrade preparation, backfilling and protecting of all facilities as shown on the plans and/or as directed by the Engineer, which are not included in other bid items.

PART 2 – PRODUCTS (NOT APPLICABLE)

PART 3 - EXECUTION

3.01 CONSTRUCTION

A. Construction shall conform to the applicable provisions of the Standard Specifications and these Special Provisions. The Contractor shall protect all existing structures and facilities which are adjacent to the work to be done under this contract. Any structure or facility, which is damaged as a result of the Contractor's construction operation, shall be replaced or repaired by the Contractor, at the Contractor's cost, to the satisfaction of the Engineer.

B. Backfilling, grading, subgrade preparation and compaction shall conform to the applicable provisions of the standard specifications and these special provisions.

C. The sub-grade for pavement shall be backfilled as needed and graded to subgrade plane as shown on the plans and the top 12 inches of sub-grade shall be compacted to relative compaction of not less than 95% of maximum density at optimum moisture, unless otherwise noted in the contract drawings.

D. Compaction testing shall be conducted by a California registered Geotechnical Engineering Company to be hired by the City.

E. Any re-testing required due to first test failures shall be at the Contractor's sole expense. Furnishing and applying water as directed by the hired Geotechnical Engineering Company shall be considered incidental work by the Contractor, cost of which shall be included in the contract lump sum price for this item. The finished surface of the subgrade plane at any one point shall not vary more than 0.02 foot above or below the grading plane established by the Contractor and/or as shown on the plans.

F. All excess excavated material shall be immediately removed from the project site and disposed of at the Contractor's expense at a legal dumpsite.

3.02 DUST AND DEBRIS CONTROL

A. Contractor shall implement dust control measures during demolition, construction, and grading activities in compliance with SCAQMD Rule 403.

B. Contractor shall protect neighboring properties from dust and debris during demolition, construction and grading operations.

3.03 CLEARING AND GRUBBING

A. Clearing and grubbing shall comply with SSPWC Subsection 300-1 and the following:

1. The site shall be cleared of grass and weeds to a depth of at least 6 inches and debris and obstructions including brush, trees, logs, stumps, roots, heavy sod, vegetation, rock, stones larger then 6 inches in any dimension, and broken or old concrete and pavement.

3.04 SALVAGE AND DISPOSAL

A. Salvage: Topsoil shall be salvaged and stored at a location which will not interfere with the work, unless otherwise directed by the City.

B. Disposal: Waste material shall be disposed of in accordance with SSPWC Subsection 300-1.3

*** END OF SECTION ***

SECTION 02300

EXCAVATION AND STRUCTURAL FILL

PART 1 – GENERAL

1.1 WORK OF THIS SECTION

A. The CONTRACTOR shall perform all earthwork required for construction of the Work. The Work includes the loosening, removing, loading, transporting, depositing, and compacting in their final locations of all in-situ and select materials, wet and dry. The CONTRACTOR shall comply with all local, state, and federal safety and health standards, laws, and regulations.

1.2 RELATED SECTIONS

A. The Work of the following Sections applies to the Work of this Section. Other Sections, not referenced below, shall also apply to the extent required for proper performance of this Work:

1. Section 03300 Cast-in-Place Concrete

1.3 REFERENCE SPECIFICATIONS, CODES AND STANDARDS

A. Except as otherwise indicated in this Section, the CONTRACTOR shall comply with the latest edition of the Standard Specifications for Public Works Construction (SSPWC).

B. The Work of this Section shall comply with current versions, with revisions, of the following:

1. International Building Code (IBC)
2. Construction Safety Orders, Division of Industrial Safety, State of California
3. California Department of Transportation Traffic Manual
4. California Test Methods
5. California Code of Regulations, Title 8, Section 1541
6. *REPORT OF GEOTECHNICAL INVESTIGATION CONDITION, SEISMIC AND STRUCTURAL ASSESSMENT OF POTABLE WATER STORAGE RESERVOIRS, PUMP STATIONS, AND TRANSMISSION MAINS CITY OF REDLANDS, CALIFORNIA*, Prepared by GROUP DELTA, August 18, 2021.
7. *ADDITIONAL GEOTECHNICAL RECOMMENDATIONS AGATE, COUNTRY CLUB, FIFTH AVENUE, AND TEXAS STREET RESERVOIRS AND PUMP STATIONS CITY OF REDLANDS, CALIFORNIA,* Prepared by GROUP DELTA, December 5, 2023.

1.4 CONTRACTOR SUBMITTALS

A. The CONTRACTOR shall submit the following in compliance with Section 2-5 of the SSPWC:

1. The CONTRACTOR's attention is directed to the provisions for "Shoring and Bracing Drawings" in Section 6705 of the California Labor Code. The CONTRACTOR's detailed plan showing the design and calculations for all shoring, bracing, sloping of the sides of excavation, or other provisions for worker protection against the hazard of caving ground during the excavation of trenches or structure excavation. The CONTRACTOR's detailed plan shall include a description of the methods used, schedule and equipment, including trench shields, to be used for earthwork operations. The CONTRACTOR's plan shall identify the locations of temporary soil stockpiles. The CONTRACTOR's detailed plan shall be submitted before starting any trench or structure excavation 5-feet deep or over. The CONTRACTOR's plan shall be prepared and signed and sealed by a Professional Engineer experienced in the field of geotechnical engineering and licensed in the State of California. The CONTRACTOR shall be in possession of the CITY's written acceptance of the detailed plan before starting any trench or structure excavation 5-feet deep or over. If the CONTRACTOR'S detailed plan varies from the shoring system established in the Construction Safety Orders of the State of California, the CONTRACTOR's detailed plan shall be prepared and signed by a civil or structural engineer licensed in the State of California.

2. A copy of the excavation permit issued by the California Department of Industrial Safety.

3. Samples of imported material in accordance with SSPWC Subsection 306-1.3.7.

4. Such other samples of materials as the CONSTRUCTION MANAGER may require.

1.5 FIELD TESTING

A. General: Field soils testing will be done by a testing laboratory of the CONSTRUCTION MANAGER or CITY's choice at the CONTRACTOR's expense, except as indicated below:

B. Where fill is to be placed, the upper 6 to 8 inches of the surface exposed by the excavation should be scarified, moisture-conditioned to 2 to 3 percent over optimum moisture content, and compacted to 90 percent relative compaction and 95% relative compaction for pavement sections. If localized areas of relatively loose soil prevent proper compaction, over-excavation and re-compaction will be necessary. The on-site soil is generally suitable for use as compacted fill and backfill, provided that any cobbles or rock fragments greater than 3 inches are screened and removed from the soil prior to placement and compaction. A limitation of particle size to 2 inches is preferred. Compaction testing will be facilitated by a smaller, maximum particle size.

C. Where soil material is required to be compacted to a percentage of maximum density, the maximum density at optimum moisture content will be determined in accordance with ASTM D1557. Where cohesionless, free draining soil material is required to be compacted to a percentage of relative density, the calculation of relative density will be determined in accordance with ASTM D4253 and D4254. Field density in-place tests will be performed in accordance with ASTM D1556 – Standard Method for Density and Unit Weight of Soil in Place by the Sand-Cone Method

or by such other means acceptable to Division of Safety of Dam (DSOD). The minimum frequency of density testing shall be one test per lift, with a minimum of 1 test per 50 square feet of excavation. Additional testing may also be required as directed by the Engineer.

D. In case the test of the fill or backfill show non-compliance with the required density, the CONTRACTOR shall accomplish such remedy as may be required to insure compliance. Subsequent testing to show compliance shall be by a testing laboratory selected by the CONSTRUCTION MANAGER and paid by the CONTRACTOR.

E. The CONTRACTOR shall provide test trenches and excavations including excavation, trench support, and groundwater removal for the CONSTRUCTION MANAGER's field testing operations. The trenches and excavations shall be provided at the locations and to the depths required by the CONSTRUCTION MANAGER.

1.6 DEFINITIONS

A. Fill material is defined as material used to raise the level of a portion of the site to the line and grade indicated.

B. Backfill material is defined as material used to refill an excavation. Backfill material is defined as starting 1 foot above the top of the pipe or conduit, or at the subgrade for cast-in-place structures such as vaults and valve boxes.

C. Bedding material is defined as material within the pipe zone that supports and surrounds pipe or conduit.

D. The pipe zone is generally defined as the area that extends from 6 inches below the bottom of the pipe to 1 foot above the top of the pipe. For steel pipe, the pipe zone begins 4 inches below the bottom of the pipe.

PART 2 -- PRODUCTS

2.1 FILL AND BACKFILL MATERIALS

A. General: Fill and backfill material shall consist of select material obtained from the excavation, imported material, bedding material, or unclassified material. The CONTRACTOR shall import at its expense materials in excess of the approved material obtained from excavation as required to complete the fill, backfill, and grading Work as indicated. Fill and backfill materials to be placed within 6-inches of any structure or pipe shall be free of rocks or unbroken masses of earth materials having a maximum dimension larger than 3-inches.

B. Unsuitable materials include the materials listed below:

1. Primarily fine-grained soils which, when classified under ASTM D2487 – Standard Classification of Soils for Engineering Purposes (Unified Soil Classification System), fall in the classifications of Pt, OH, CH, MH, OL, CL or ML.

2. Soils which cannot be compacted sufficiently to achieve the density speci-

fied for the intended use.

3. Materials that contain hazardous or designated waste materials including petroleum hydrocarbons, pesticides, heavy metals, and any material which may be classified as hazardous or toxic according to applicable regulations.

4. Soils that contain greater concentrations of chloride or sulfate ions, or have a soil resistivity or pH less than the existing on-site soils.

5. Topsoil, except as specified herein.

6. Gravelly/rocky material in excess of 30 percent retained on a ¾-inch size sieve.

C. Select Material: Select material shall consist of primarily granular material obtained from the excavation which is free of vegetation, organic matter, rubbish, debris, rocks larger than 3-inches in diameter and other unsuitable material, has an expansion index less than 20 (less than 20 for footings and floor slabs) as determined by UBC Standard No. 18-2, has a plasticity index of 20 or less, has a liquid limit of 40 or less, and is approved as select material by the CONSTRUCTION MANAGER.

Imported Material: Imported material shall conform to the same specifications as select material defined above. In addition, the imported materials shall comply with SSPWC subsection 306-1.3.7 and shall have a minimum resistivity greater than 2,000 ohm-cm when tested in accordance with California Test method 643. The Geotechnical Engineer shall evaluate materials before importation. Imported material placed in areas to be planted shall be able to support normal plant growth. The CONTRACTOR shall obtain approval by the CONSTRUCTION MANAGER before transporting imported material.

D. Bedding Material: Bedding material shall be sand, gravel, crushed aggregate or free draining material in accordance with SSPWC Subsection 306-1.2.1, including the Regional and City Supplemental Amendments.

E. Unclassified Material: Unclassified material shall conform to SSPWC Subsection 300-4.

F. Structure Backfill: Structure backfill shall conform to SSPWC Subsection 300-3.5.

G. Drainrock (Caltrans Class 2 Permeable) shall be clean, crushed rock or gravel, durable and free from slaking or decomposition under the action of alternate wetting or drying. The material shall be uniformly graded and shall meet the following gradation requirements:

H.

Sieve Size	Percentage passing
1-inch	100
¾-inch	90-100
3/8-inch	40-100
No. 4	25-40
No. 8	18-33
No. 30	5-15
No. 50	0-7
No. 200	0-3

The drainrock shall have a sand equivalent value of not less than 75. The finish graded surface of the drainrock immediately beneath hydraulic structures shall be stabilized to provide a firm, smooth surface upon which to construct reinforced concrete floor slabs. The CONTRACTOR shall use, at its option, one of the asphalt types listed below:

	Type 1	Type 2	Type 3
Designation	SC-800	SC-250	RS-1
Spray Temperature, deg F	175-255	165-200	70-120
Coverage, gal/sq yd	0.50	0.50	0.50

If the surface remains tacky, sufficient sand shall be applied to absorb the excess asphalt.

2.2 ROCK PRODUCTS

A. Rock products, consisting of crushed rock, rock dust, gravel, sand, and stone for riprap shall be clean, hard, sound, durable, uniform in quality and free of disintegrated material, organic matter, oil, alkali, or other deleterious substance, and shall, unless otherwise specified, conform to the requirements of SSPWC Subsection 200-1, including the Regional Supplement Amendments.

2.3 UNTREATED BASE MATERIALS

A. Untreated base materials shall conform to the requirements of SSPWC Subsection 200-2.

B. Materials for use as untreated base or subbase shall be crushed aggregate base.

2.4 TOPSOIL

A. Topsoil shall be designated as Class B (selected) or Class C (unclassified), and shall conform to the requirements of SSPWC Subsection 212-1.1.

PART 3 – EXECUTION

3.1 GENERAL

A. The CONTRACTOR shall perform earthwork as necessary to complete the Work as shown on the Contract Drawings and specified herein. The CONTRACTOR shall take the necessary precautionary measures to prevent dust or other nuisances which might be created by reasons of his activities. The necessary precautionary measures shall conform to the requirements of SSPWC Subsection 7-8. The requirements specified in Subsection 7-8 shall be extended to include paved surfaces.

B. All types of earthwork, including trench, structural and general excavation, fill, backfill and compaction, shall conform to applicable requirements of the SSPWC Section 300 and to the requirements specified herein.

C. Pursuant to California Code of Regulations, Title 8, Section 1541, at least two working days before the start of excavation, the CONTRACTOR shall notify the Regional Notification Center and known owners of underground facilities in the area who are not members of the Regional Notification Center of the proposed excavation.

3.2 SITE PREPARATION

A. Areas to be excavated, filled, graded, and to be occupied by permanent construction or embankments shall be prepared by clearing, grubbing and stripping. Clearing, grubbing and stripping shall conform to the applicable requirements of SSPWC Subsection 300-1.

3.3 EXCAVATION

A. General:

1. Except when specifically provided to the contrary, excavation shall include the removal of all materials of whatever nature encountered, including all obstructions of any nature that would interfere with the proper execution and completion of the work. Unless otherwise directed, the removal of said materials shall conform to the lines and grades shown. Unless otherwise provided, the entire construction site shall be stripped of all vegetation and debris, and such material shall be removed from the site prior to performing any excavation or placing any fill. The CONTRACTOR shall furnish, place, and maintain all supports and shoring that may be required for the sides of the excavations, and all pumping, ditching, or other measures for the removal or exclusion of water. Excavations shall be sloped or otherwise supported in a safe manner in accordance with the rules, orders, and regulations of the Division of Industrial Safety of the State of California.

2. The quantity of excavation material in the project is greater than the quantities of fill and backfill material required by the project. The area of the site limits the available space on-site for temporary stockpiling. The Contractor shall provide for off-site temporary storage of soils materials that the earthwork operations may require. To the extent that existing on-site soils materials meet the specified requirements for fill and backfill, existing on-site materials may be used for fill and backfill. All unsuitable soils materials and all surplus soils materials shall be disposed of off-site at any legal disposal site in compliance with all federal, state, county, and city regulations. The CONTRACTOR shall provide all testing of soils materials that may be required for off-site disposal.

B. Unclassified Excavation: Unclassified excavation shall consist of all excavation, including roadways, unless separately designated.

1. Unsuitable material shall be excavated and disposed of in accordance with the requirements of SSPWC Subsection 300-2.2.

2. Wet material, if unsatisfactory for the specified use on the project solely because of high moisture content, may be processed to reduce the moisture content, or may be required to be removed and replaced with suitable mate-

rial in accordance with the requirements of SSPWC Subsection 300-2.2.2.

3. The removal and disposal of slide and slipout material shall be in accordance with SSPWC Subsection 300-2.4.

4. Excavation slopes shall be finished in conformance with the lines and grades shown, and in accordance with SSPWC Subsection 300-2.5.

5. Surplus material shall be disposed of off-site, and in accordance with SSPWC Subsection 300-2.6.

C. Structure Excavation: Structure excavation shall consist of the removal of material for the construction of foundations for retaining walls, headwalls, culverts, buildings, or other structures, and shall be in accordance with SSPWC Subsection 300-3.

1. The treatment of foundation material shall be in accordance with SSPWC Subsection 300-3.3, and the requirements of the Geotechnical Report.

1. The subgrade of generator slabs-on-grade and any shallow foundations may require remedial grading to provide a uniform bearing condition throughout. At a minimum, the upper 24 inches below finished subgrade should be removed and recompacted or replaced with structural fill. The remedial grading should extend at least 5 feet beyond the improvements. The bottom of the excavation should be checked to ensure it is firm and unyielding prior to placement of new fill. The excavation should be filled with the excavated soils or other suitable onsite soils that are placed and compacted as recommended in the Fill and Backfill section and in accordance with the Geotechnical Report.

D. Underground Conduit Excavation:

1. General: Excavation for underground conduits shall be in accordance with SSPWC Subsection 306-1.1 and the requirements contained herein. Unless otherwise shown or ordered, excavation for pipelines and utilities shall be open-cut trenches. Trench widths shall be kept as narrow as is practical for the method of pipe zone densification selected by the CONTRACTOR.

2. Sheeting, Shoring, and Bracing of Excavations: The manner of sheeting, shoring, and bracing excavations shall be as set forth in the rules, orders and regulations of the Division of Industrial Safety of the State of California, and in accordance with the requirements of SSPWC Subsection 306-1.1.16. Sheeting, shoring, and bracing shall be provided for the protection of life and limb, for the protection of existing underground and above-ground structures and improvements, and shall conform to applicable safety orders. Sheeting, shoring, and bracing shall be provided to prevent trench sluffing, pavement separation and similar problems during construction, and shall include furnishing, installation, maintenance, and removal.

3. Trench Bottom: Except when pipe bedding is required, the bottom of the trench shall be excavated uniformly to the grade of the bottom of the pipe. The trench bottom shall be given a final trim, using a string line for establishing grade, such that each pipe section when first laid will be continually in contact with the ground along the extreme bottom of the pipe. Rounding out the trench to form a cradle for the pipe will not be required.

4. Open Trench: The maximum length of open trench permitted in any one location is 200 feet. All trenches shall be fully backfilled at the end of each day or, in lieu thereof, shall be covered by heavy steel plates adequately braced and capable of supporting vehicular traffic in those locations where it is impractical to backfill at the end of each day. The top of the steel plates shall be set flush with the top of the adjacent pavement, and the plates shall be surfaced for improved vehicular traction.

5. Trench Over-Excavation: Where the Drawings indicate that trenches shall be over-excavated, they shall be excavated to the depth required, and then backfilled to the grade of the bottom of the pipe.

6. Where pipelines are to be installed in embankment fills, the fill shall be constructed to a level at least one-foot above the top of the pipe before the trench is excavated.

E. Over-Excavation Ordered by CONSTRUCTION MANAGER: Trenches shall be over-excavated beyond the depth shown when required by the CONSTRUCTION MANAGER. Such over-excavation shall be to the depth ordered by the CONSTRUCTION MANAGER. The over-excavation shall then be backfilled using 3/4-inch crushed rock underlain by an approved woven geotextile. The CONTRACTOR shall then place bedding material over the crushed aggregate. All work specified in the Section shall be performed by the CONTRACTOR at no additional cost to the CITY when the over-excavation ordered by the CONSTRUCTION MANAGER is within 6 inches of the limit shown on the Drawings. When the over-excavation ordered by the CONSTRUCTION MANAGER is 6 inches more than the limit shown on the Drawings, additional payment will be made to the CONTRACTOR for the portion that exceeds the said 6-inch distance.

F. Structure Over-Excavation Ordered by CONSTRUCTION MANAGER: Structure excavations shall be over-excavated beyond the depth shown when required by the CONSTRUCTION MANAGER. Such over-excavation shall be to the depth ordered by the CONSTRUCTION MANAGER.

G. Excavation in Lawn Areas:

1. Where excavation occurs in lawn areas, the sod shall be carefully removed and stockpiled to preserve it for replacement. Excavated material may be placed on the lawn; provided, that a drop cloth or other suitable method is employed to protect the lawn from damage. The lawn shall not remain covered for more than 72 hours. Immediately after completion of backfilling [and testing of the pipeline], the sod shall be replaced in a manner so as to restore the lawn as near as possible to its original condition. CONTRACTOR shall provide new sod if removed sod has remained stockpiled for more than 72 hours.

   The CONTRACTOR shall restore the lawn irrigation system removed or damaged due to excavation operations to a condition equal to the previous condition.

H. Rock Excavation:

1. Rock excavation shall include removal and disposal of the following: (1) all boulders measuring 1/3 of a cubic yard or more in volume; (2) all rock material in ledges, bedding deposits, and unstratified masses which can be removed without systematic drilling and blasting; (3) concrete or masonry structures which have been abandoned.

2. Rock excavation shall be performed by the CONTRACTOR, however, should the quantity of rock excavation be affected by any change in the scope of Work, an appropriate adjustment of the contract price will be made.

I. Over-excavation and Removal of Unsuitable Soils Materials:

1. The subgrade of generator slabs-on-grade and any shallow foundations may require remedial grading to provide a uniform bearing condition throughout. At a minimum, the upper 24 inches below finished subgrade should be removed and replaced as structural fill. The remedial grading should extend at least 5 feet beyond the improvements. The bottom of the excavation should be checked to ensure it is firm and unyielding prior to placement of new fill. The excavation should be filled with the excavated soils or other suitable onsite soils that are placed and compacted as recommended in the Fill and Backfill section and in accordance with the Geotechnical Report.

2. Excavate below the limits of subgrades shown where unsuitable materials are found.

3. Provide over-excavation and disposal to the limits directed by the CONSTRUCTION MANAGER. Unsuitable materials include expansive soils, oversize materials, existing fills, topsoil, soft and disturbed materials, and other materials that may be deemed to be unsuitable by the CONSTRUCTION MANAGER.

4. The excavation and removal of the unsuitable soils materials shall extend outward from the bottom of the foundation along a projected 1.5:1 maximum plane a distance equal to or greater than the depth of the removal below the foundation.

5. The excavation shall be benched prior to placement of the new soil fill. The benches shall be a minimum of 10 feet in width and spaced at no more than 2-foot vertical height intervals.

6. Observation: The CONSTRUCTION MANAGER may be assisted by a Geotechnical Engineer, in particular with the suitability of subgrades, the determination of unsuitable soils materials, the approval of fill materials, and compaction testing. If a Geotechnical Engineer is so utilized, the Contractor shall provide full access to the work and prior notices of work to be done so the Geotechnical Engineer may be present at the proper times.

J. Exploratory Excavation: The CONTRACTOR shall excavate and expose buried points of connection to existing utilities and structures as indicated on the Drawings. Excavations shall be performed prior to preparation of Shop Drawing Submittals for connections and prior to fabrication of pipe. The data obtained from exca-

vation shall be used in preparing Shop Drawings. Data, including dates, locations excavated, and dimensioned sketches, shall be submitted to the CONSTRUCTION MANAGER within one week of excavation. Damage to utilities or structures from excavation activities shall be repaired by the CONTRACTOR.

3.4 FILL AND BACKFILL

A. General:

1. Fill and backfill shall be placed in accordance with the applicable provisions of SSPWC Section 300 and the requirements stated herein.
2. Backfill shall not be dropped directly upon any structure or pipe. Backfill shall not be placed around or upon any concrete structure until the concrete has cured in accordance with the requirements of Section 33000 – Cast-in-Place Concrete and has attained sufficient strength to withstand the loads imposed.
3. Except for drainrock materials being placed in over-excavated areas or trenches, backfill shall be placed after water is removed from the excavation and the excavation sidewalls and bottom have been dried to a moisture content suitable for compaction.

B. Placing and Spreading of Materials:

1. Materials shall be placed and spread evenly in layers. Compaction shall be achieved using mechanical equipment capable of producing a uniformly compacted product. The loose lift thickness shall be 8 inches, unless performance observed and testing during earthwork indicates a thinner loose lift is needed.
2. During spreading, each layer shall be thoroughly mixed as necessary to promote uniformity of material in each layer. Bedding materials shall be brought up evenly around the pipe so that when compacted, the material will provide uniform bearing and side support.
3. Where the material moisture content is below the optimum moisture content water shall be added before or during spreading until the proper moisture content is achieved.
4. Where the material moisture content is too high to permit the specified degree of compaction the material shall be dried until the moisture content is satisfactory.

C. Compaction Requirements

1. The CONTRACTOR shall perform density and compaction tests in accordance with SSPWC Subsection 211-2.
2. The relative compaction of fill, backfill, and base material shall be in accordance with SSPWC Section 300, with the following exceptions:
    a. Subgrade where trench has been over-excavated: 95% per ASTM D1557
    b. Fill beneath structures: 90% per ASTM D1557

c. Fill beneath pavement: 95% per ASTM D1557.

d. Rocks greater than 3-inches in maximum dimension may not be used in compaction fill.

3. In case the tests of the backfill show non-compliance with the required compaction or density, the CONTRACTOR shall accomplish such remedy as may be required to ensure compliance. Subsequent testing to show compliance shall be by a testing laboratory selected by the CONSTRUCTION MANAGER and shall be at the CONTRACTOR's expense.

D. Unclassified Fill: All fill shall be of unclassified material unless separately designated. Construction and unclassified fill, including preparing the area on which fill is to be placed, and the depositing, conditioning, and compacting of fill material shall be in accordance with SSPWC Subsection 300-4. Unclassified fill shall not be used within 5 feet of any structural wall or foundation, shall be 5 feet from utility trenches, and shall not be used as backfill for utility trenches.

E. Structure Backfill: Backfill at structures shall be select material placed in accordance with SSPWC Subsections 300-3.5 and 300-4.5. Backfill under hydraulic or water retaining structures with underdrains shall be drainrock on top of select material.

F. Underground Conduit Bedding and Backfill:

1. Bedding around pipe shall be bedding material placed in accordance with the requirements of SSPWC Subsection 306-1.2.1 except as noted. Water pipes shall be bedded in accordance with the City of Redlands Standard Drawings. Bedding material shall be sand, gravel, crushed rock, or native free-draining granular material having a sand equivalent of not less than 50 and an expansion when saturated with water of not more than 0.5 percent. Bedding material shall be mechanically compacted. The relative compaction of the conduit bedding shall be 90 percent. Neither flooding nor jetting will be allowed for compaction of the bedding.

2. If bedding material consists primarily of gravel or crushed rock, the bedding material shall be wrapped using an approved nonwoven geotextile filter fabric. Geotextile filter fabric will not be required where sand is used for bedding material or where the excavation is through rock.

3. Upon completion of the bedding and following placement of the pipe or conduit, trench backfill shall be placed and mechanically densified in accordance with SSPWC Subsection 305-1.3. Backfill shall be select imported material. Water densified compaction in accordance with the requirements of SSPWC Subsection 306-1.3.3 shall not be used, all trench backfill shall be mechanically compacted. Mechanically-compacted trenched backfill shall be placed in accordance with the requirements of SSPWC Subsection 306-1.3.2.

4. Trench backfill shall be compacted to obtain a minimum 90 percent relative compaction. The top foot of the trench backfill shall be densified to a minimum of 95 percent relative compaction except in unimproved areas. Only lightweight tamping equipment shall be used within 3 feet of the pipe, conduit, or appurtenance. Testing of compaction shall be by a testing laboratory selected by the CONSTRUCTION MANAGER and shall be at the CONTRACTOR's expense.

3.5 PREPARATION OF SUBGRADE

A. The preparation of subgrade for pavement, curbs and gutters, driveways, sidewalks and other roadway structures shall be in accordance with SSPWC Subsection 301-1.

3.6 UNTREATED BASE

A. Aggregate base material shall be spread and compacted in accordance with SSPWC subsection 301-2.

3.7 TEMPORARY STOCKPILES

A. Locations of temporary stockpiles shall be approved by the CONSTRUCTION MANAGER.

B. Temporary stockpiles shall not surcharge buried pipe, conduits or other structures.

END OF SECTION

SECTION 02350

EARTHWORK – PIPELINE AND MISCELLANEOUS STRUCTURES

PART 1 - GENERAL

1.01 DESCRIPTION

Contractor shall provide all tools, equipment, materials, labor, traffic control, excavating, shoring, dewatering, subgrade preparation, backfilling, compacting, grading and temporary resurfacing required for the construction of the work shown on the Contract Drawings and/or required in the Specifications.

Earthwork shall include, without classification, the removal and disposal of all materials of whatever nature encountered that interfere with the proper construction and completion of the Work.

Where any permit requirements exceed the requirements of this Section, the permit requirements shall govern.

1.02 SYSTEM

The Work of this Section shall include the excavation, backfill, temporary resurfacing and traffic control for proper completion of the Work.

1.03 STANDARD SPECIFICATION

Except as specifically modified herein or shown otherwise on the Contract Drawings, the work under this Section shall be in compliance with the provisions in the applicable Sections of the latest edition of the Standard Specifications for Public Works Construction (SSPWC) also known as the “Green Book”.

In case of conflict between any requirements set forth in this Section, the Contract Drawings and any provisions of the foregoing Standard Specifications the requirements shown on the Contract Drawings shall govern over the requirements set forth herein and the requirements set forth herein shall govern over the SSPWC.

PART 2 - PRODUCTS

2.01 CRUSHED ROCK

Crushed rock material used for pipe bedding and/or trench backfill shall conform to SSPWC Sections 200-1.1 and 200-1.2 (Crushed Rock and Rock Dust). Gradation shall be 1-inch unless otherwise shown on the Contract Drawings.

2.02 SAND

Sand used for pipe bedding and/or trench backfill shall conform to SSPWC Section 200-1.5 (Sand for Asphalt Concrete).

2.03 SELECT SUBBASE

Material used for select subbase/subgrade shall conform to SSPWC Section 200-2.6.

2.04 TRENCH BACKFILL SLURRY

Trench backfill slurry used for pipe bedding and/or trench backfill shall conform to SSPWC Sections 201-1.1.1 and 201-1.2.1 (Trench Backfill Slurry - Class100-E-100). Controlled low strength material (CLSM) conforming to 201-6 may be used for trench backfill and pipe bedding.

2.05 TEMPORARY RESURFACING

Trench temporary resurfacing used for streets, parking areas, driveways and sidewalks shall conform to SSPWC Section 306-13.1.

2.06 PERMANENT RESURFACING

Permanent resurfacing shall be in conformance with Section 02740 of these Specifications.

2.07 DETECTION TAPE

Detection tape shall be a plastic metallic type consisting of a blue color coded polyethylene or melinex film, a solid core aluminum foil detection layer and other layers as required. Type shall be resistant to acids, alkalines and other components likely to be encountered in soils. Tape shall be imprinted with "CAUTION WATER PIPELINE BELOW". Tape shall be Terra Tape "D" by Griffolyn Company, Detectatape by Allen Systems, or approved equal.

2.08 FILTER FABRIC

Non-woven geotextile fabric conforming to Caltrans Standard Specification Section 88.

PART 3 - EXECUTION

3.01 GENERAL

Conform to the requirements of SSPWC Sections 306-1, 306-1.5, the Contract Drawings and as stated herein.

3.02 REMOVAL AND REPLACEMENT OF SURFACE IMPROVEMENTS

A. Removal and replacement of surface improvements shall conform to SSPWC Section 300-1.3 and reconstruction in accordance with 302 or 303-5 unless otherwise shown on the Contract Drawings or stated herein.

3.03 PROTECTION OF EXISTING UTILITIES/FACILITIES

A. Contractor shall be responsible for the protection of all existing utilities/facilities in accordance with SSPWC Section 5. Any method of construction chosen which necessitates heavy equipment imposing loads on existing utilities/facilities requires approval by the Owner and the utility.

B. Contractor shall be responsible for complying with SSPWC Section 5-1 and Section 4216 of the California Government Code for the proper notification of the regional notification center (Underground Service Alert of Southern California) and shall obtain an inquire identification number.

3.04 SHORING AND BRACING

The Contractor shall prepare detailed excavation shoring, bracing, sloping plans or other provisions to be made for worker and public protection from the hazard of caving ground during the excavation. All plans shall include a statement that the plan complies with all Division of Industrial Safety of the State of California (CAL/OSHA) Construction Safety Orders requirements

The Contractor shall submit, in advance (minimum of 5-working days) of any excavation operation, a copy of their plan(s).

3.05 CONTROL OF SURFACE AND GROUND WATER

A. Contractor shall be responsible for furnishing/placing all temporary drainage facilities required to protect the Contractor's excavations from surface waters (including rainfall) by grading, sandbags, temporary berms, etc. to ensure that excavations remain dry at all times and also to ensure that construction water and/or storm water does not create or contribute to water pollution. In channels, storm drains, drainage courses and bodies of water.

B. All excavations shall be maintained free of ground water at all times to a minimum elevation of 1-foot below all foundation or pipeline construction.

3.06 MAXIMUM LENGTH OF OPEN TRENCH OR EXCAVATION

A. Maximum length of open trench in public streets shall be limited to 250 feet for each pipeline heading during the Contractor's working hours. Trenches in public streets shall be protected by trench bridging (steel trench plates) to allow public vehicular and pedestrian traffic during working hours and during all nonworking hours (including nonworking days, weekends and holidays). Steel trench plates shall be in accordance with Section 13 of the "Work Area Traffic Control Handbook" (WATCH MANUAL), Edition in effect on the date of execution of the Contract) and shall have a nonskid surface.

B Maximum length of open trench in open areas (restricted public access areas) shall be limited to 500 feet for each pipeline heading during the Contractor's working hours. All trenches in open areas shall be protected by trench bridging (steel trench plates) or by secure temporary fencing surrounding the entire open trench during all nonworking hours (including nonworking days, weekends and holidays). Temporary fencing shall be 6 feet high chain link fencing

C All open excavations shall be protected by trench bridging or temporary fencing (6-

feet high) during all nonworking hours (including nonworking days, weekends and holidays).

3.07 TRENCH WIDTH

A. Trench widths shall conform to SSPWC Section 306-3.4 except as follows:

Unless otherwise shown on the Contract Drawings, maximum and minimum width of sewer and water pipeline trenches shall be as follows:

1. Maximum width shall be no more than 24-inches wider than the widest dimension of the pipe (not including fittings), unless otherwise shown on the Contract Drawings. Width shall be measured at the top of pipe.

2. Minimum width shall not be less than 12-inches wider than the widest dimension of the pipe (not including fittings), unless otherwise shown on the Contract Drawings. Width shall be measured at the top of pipe.

3. Deep trench excavations requiring shoring shall have a trench width that included the shoring system and maximum and minimum widths per items 1 and 2 above.

B. All trenches in public streets shall have vertical walls.

C. Trenches in open areas may have vertical walls or be sloped back as appropriate with site and soil conditions.

3.08 ACCESS TO TRENCHES AND EXCAVATIONS

Ingress and egress to all trenches and excavations shall be in accord with SWPWC Section 306-3.6.

3.09 SUBGRADE/SUBBASE PREPARATION

A. Subgrade/subbase depth shall extend to 12-inches below pipelines and structures and shall be firm, unyielding, and free of rock(s) and debris. This is the area below the pipe foundation, and shall only be excavated and refilled under the direction of the Engineer or when control of groundwater is required.

Removal and replacement of any unsuitable subgrade/subbase material, shall be as determined by the Engineer. The Contractor shall over-excavate the trench bottom and backfill the trench subgrade with 1 ½-inch crushed rock when directed by the Engineer. The Contractor shall also install a geofabric under 1-inch, over 4-inch crushed rock, and 4-inch crushed rock on the sides of the rock base. Joints shall be overlapped a minimum of 8 inches. Geofabric shall be woven geotextile, made of 100% polypropylene silt film yarns. Geofabric shall be Mirafi 140N or equal. Payment for over-excavation, 1 ½-inch crushed rock, and geofabric will be at the unit price per ton of crushed rock installed, included in the bid schedule, and no additional compensation shall be allowed.

B. All “UNAUTHORIZED” over excavation by the Contractor shall be replaced and compacted to a minimum relative compaction of 90% in conformance with the State of California, Division of Highways (Caltrans) Test Method No. 216. All cost associated with “UNAUTHORIZED” over excavation, material replacement and testing shall be at the Contractor’s expense.

3.10 PIPELINE BEDDING AND SUBBASE FOR STRUCTURES

Pipeline bedding and subbase for structures shall conform to these specifications and Agency of Standard Drawings unless otherwise shown on the Contract Drawings.

3.11 BACKFILL AND COMPACTION

A. Trench backfill material shall be clean, free from organic material, trash, debris, rubbish, broken portland cement concrete, asphalt concrete, rocks over 3-inches in size or other objectionable material and shall have a minimum sand equivalent of 30 as determined by the State of California, Division of Highways (Caltrans) Test Method No. Calif. 217, and not more than 20 percent of the backfill material will pass through a 200 mesh sieve.

B. Structures backfill material shall be clean, free from organic material, trash, debris, rubbish, broken portland cement concrete, asphalt concrete, rocks over 3-inches in size or other objectionable material and shall have a minimum sand equivalent of 30 as determined by the State of California, Division of Highways (Caltrans) Test Method No. Calif. 217, and not more than 20 percent of the backfill material will pass through a 200 mesh sieve.

C. Place bedding and backfill materials true to the lines, grades, cross-sections and compact in accord with the requirements shown on the Contract Drawings.

D. Trench backfill shall not be placed over pipe until after the pipe has been inspected by the Contractor.

E. Backfill shall not be placed against structures until the 28-day compressive strength is obtained.

F. Trench backfill material shall be in vertical lifts and shall not exceed the thickness specified for various types of equipment (SSPWC Section 306-12.3.1 (uncompacted lifts) horizontal lifts. The difference in compacted backfill material on each side of pipe shall not exceed 4-inches.

G. Impact, free falling, or “stomping” equipment shall not be used within 3-feet of top of pipe of for structures backfill compaction.

H. Jetting (water densifying) methods for compaction shall not be permitted for trench or structures backfill.

I. Compaction requirements shall be as shown on the Contract Drawings.

J. Compaction testing shall conform to the State of California, Division of Highways

(Caltrans) Test Method No. 216.

K. Frequency and depth of all compaction tests will be as determined by the Contractor.

L. Compaction testing shall be conducted by a California Registered Geotechnical Engineering Company to be hired by the Contractor, subject to approval of the Agency. The number of compaction tests to be taken shall be at the discretion of the Agency. All costs associated with providing compaction testing shall be borne by the Contractor.

M. Any re-testing required due to compaction test failures shall be made by the Contractor hired geotechnical engineering company at no additional cost to the Agency.

*** END OF SECTION ***

SECTION 03200

REINFORCEMENT STEEL

PART 1 - GENERAL

1.01 WORK OF THIS SECTION

A. The Contractor shall provide concrete reinforcement steel, concrete inserts, wires, clips, supports, chairs, spacers, and other accessories, complete, all in accordance with contract documents.

B. Work included in this section: Principal items are:

1. Furnishing and placing bar reinforcing for cast-in-place concrete and shotcrete.

1.02 RELATED SECTIONS

A. The work of the following sections apply to the work of this section. Other sections, not referenced below, shall also apply to the extent required for proper performance of this work.

1. Section 03300 Cast-in-Place Concrete

1.03 REFERENCE SPECIFICATIONS, CODES AND STANDARDS

A. Except as otherwise indicated in this section of the specifications, the Contractor shall comply with the latest adopted edition of the Standard Specifications for Public Work Construction (SSPWC), together with the latest adopted editions of the Regional Amendments.

B. The latest edition of the California Building Code (CBC).

C. Commercial Standards (Current Edition):

ACI 315	Details and Detailing of Concrete Reinforcement
ACI 318	Building Code Requirements for Structural Concrete
CRSI MSP	Concrete Reinforcing Steel Institute Manual of Standard Practice
ACI 117	Standard Tolerances for Concrete Construction Materials

D. ASTM Standards in Building Codes (Current Edition):

ASTM A615	Specification for Deformed and Plain Carbon Steel Bars for Concrete Reinforcement
ASTM A706	Specification for Low-Alloy Steel Deformed and Plain Bars for Concrete Reinforcement

1.04 CONTRACTOR SUBMITTALS

A. The Contractor shall furnish shop bending diagrams, placing lists, and drawings of all reinforcement steel before fabrication in accordance with the requirements of Sub-Section 1.23.0 of the Special Provisions.

B. Details of the concrete reinforcement steel and concrete inserts shall be submitted at the earliest possible date after receipt of the Notice to Proceed. Details of reinforcement steel for fabrication and erection shall conform to ACI 315 and the requirements indicated. The shop bending diagrams shall show the actual lengths of bars, to the nearest inch, measured to the intersection of the extensions (tangents for bars of circular cross section) of the outside surface. The shop drawings shall include bar placement diagrams which clearly indicate the dimensions of each bar splice.

1.05 QUALITY ASSURANCE

A. If requested by the Engineer, the Contractor shall furnish samples from each heat of reinforcement steel delivered in a quantity adequate for testing. Costs of initial tests will be paid by the Agency. Costs of additional tests due to material failing initial tests shall be paid by the Contractor.

B. Reinforcement steel spliced by welding is not permitted at any location unless approved by the engineer.

PART 2 - PRODUCTS

2.01 REINFORCEMENT STEEL

A. Reinforcement steel for all cast-in-place reinforced concrete construction shall conform to the following requirements:

1. Bar reinforcement shall conform to the requirements of ASTM A615 for Grade 60 Billet Steel Reinforcement or as otherwise indicated.
2. Ties shall be Annealed Steel, 14 gauge minimum.

B. Accessories:

1. Accessories shall include all necessary chairs, slab bolsters, concrete blocks, tie wires, dips, supports, spacers, and other devices to position reinforcement during concrete placement. All bar supports shall meet the requirements of the CRSI Manual of Standard Practice, including special requirements for supporting epoxy coated reinforcing bars. Wire bar supports shall be CRSI Class 1 for maximum protection with a 1/8-inch minimum thickness of plastic coating which extends at least 1/2-inch from the concrete surface. Plastic shall be gray in color.
2. Concrete blocks (dobies), used to support and position reinforcement steel, shall have the same or higher compressive strength as specified for the concrete in which it is located. Wire ties shall be embedded in concrete block bar supports.

PART 3 - EXECUTION

3.01 GENERAL

A. All reinforcement steel and other appurtenances shall be fabricated, and placed in accordance with the requirements of the California Building Code and the supplementary requirements indicated herein.

3.02 FABRICATION AND DELIVERY

A. The Contractor shall conform to CRSI MSP except as otherwise indicated or specified. The Contractor shall bundle reinforcement and tag with suitable indication to facilitate sorting and placing, and transport and store at site so as not to damage material. The Contractor shall keep a sufficient supply of tested, approved and proper reinforcement at site to avoid delays.

B. Bending and Forming: The Contractor shall bend bars of indicated size and accurately form in accordance with the requirements of ACI 315 and ACI 318 to shapes and lengths indicated on drawings and required by methods not injurious to materials. The Contractor shall not use heat for bending reinforcement. Bars with kinks or bends not scheduled will be rejected.

C. Fabricating Tolerance: All fabrication of reinforcing bars shall meet the requirements of ACI 117.

3.03 PLACING

A. Reinforcement steel shall be accurately positioned and shall be supported and wired together to prevent displacement, using annealed iron wire ties or suitable clips at intersections. All reinforcement steel shall be supported by concrete, plastic or metal supports, spacers or metal hangers which are strong and rigid enough to prevent any displacement of the reinforcement steel. Where concrete is to be placed on the ground, supporting concrete blocks (or dobies) shall be used, in sufficient numbers to support the bars without settlement, but in no case shall such support be continuous. All concrete blocks used to support reinforcement steel shall be tied to the steel with wire ties which are embedded in the blocks. For concrete over formwork, the Contractor shall furnish acceptable bar chairs and spacers.

B. Limitations on the use of the bar support materials shall be as follows:

1. Concrete Dobies: Permitted at all locations except where architectural finish is required.
2. Wire Bar Supports: Permitted only at slabs over dry areas, interior dry wall surfaces and exterior wall surfaces.
3. Plastic Bar Supports: Permitted at all locations except on grade.

C. Tie wires shall be bent away from the forms in order to provide the specified concrete coverage.

D. Bars additional to those shown which may be found necessary or desirable by the Contractor for the purpose of securing reinforcement in position shall be provided by the Contractor at no additional cost to the Agency.

E. Unless otherwise specified, reinforcement placing tolerance shall be within the limits specified in ACI 318 except where in conflict with the requirements of the CBC.

F. Bars may be moved as necessary to avoid interference with other reinforcement steel, conduits or embedded items. If bars are moved more than one bar diameter, or enough to exceed the above tolerances, the resulting arrangement of bars shall be subject to the approval of the Engineer.

3.04 SPLICES

A. Splicing shall be in accordance with ACI 318, unless otherwise noted on Drawings.

B. Vertical Bars. Except as specifically detailed or otherwise indicated, splicing of vertical bars in concrete is not permitted, except as indicated above approved horizontal construction joints or as otherwise specifically detailed.

C. Horizontal Bars: Except as specifically detailed or otherwise indicated, splicing of horizontal bars in concrete is not permitted.

D. Welding: Except as specifically detailed or otherwise indicated, welding of reinforcing bars is not permitted.

3.05 ADDITIONAL REINFORCING

A. The Contractor shall provide additional reinforcing bars at sleeves and openings as indicated on Drawings.

3.06 EMBEDMENT OF DRILLED REINFORCING STEEL DOWELS

A. Hole Preparation:

1. The hole diameter shall be as indicated on the Drawings but shall be no larger than 0.25 inch greater than the diameter of the outer surface of the reinforcing bar deformations.
2. The depth of the hole shall be as indicated on the Drawings.
3. The hole shall be drilled by methods which do not interfere with the proper bonding of epoxy.
4. Existing reinforcing steel in the vicinity of proposed holes shall be located prior to drilling. The location of holes to be drilled shall be adjusted to avoid drilling through or nicking any existing reinforcing bars.
5. The hole shall be blown clean with clean, dry compressed air to remove all dust and loose particles.
6. Epoxy shall be injected into the hole through a tube placed to the bottom of the hole. The tube shall be withdrawn as epoxy is placed but kept immersed to prevent formation of air pockets. The hole shall be filled to a depth that ensures that excess material will be expelled from the hole during dowel placement.

7. Dowels shall be twisted during insertion into the partially filled hole so as to guarantee full wetting of the bar surface with epoxy. The bar shall be inserted slowly enough to avoid developing air pockets.

*** END OF SECTION ***

THIS PAGE INTENTIONALLY LEFT BLANK

SECTION 03251

EXPANSION AND CONSTRUCTION JOINTS

PART 1 - GENERAL

1.01 WORK OF THIS SECTION

A. This section covers the work necessary to furnish and install concrete expansion and construction joints.

1.02 SUBMITTALS

A. Furnish certified mill certificates showing that the material meets all of the requirements specified herein. The Engineer, at his option, may take samples of any materials and have them tested by an independent testing laboratory to verify their compliance with these Specifications. All such costs shall be borne by the Agency. If any materials should fail to meet these Specifications, all costs for further testing of the replacement material shall be borne by the Contractor.

1.03 OBSTRUCTIONS

A. Contractor shall pay particular attention to removing all obstructions such as concrete, nails, etc., from joints when movements of floor, wall and roof sections can be expected under prestressing, temperature and other conditions.

PART 2 - PRODUCTS

2.01 JOINT SEALERS

A. Joints shall be sealed with Sikaflex 1a or approved equal in accordance with the manufacturer's instructions and as indicated on the contract drawings

B. Primer materials, if required by the sealant manufacturer, shall conform to the printed instructions of the sealant manufacturer.

2.02 PREFORMED JOINT FILLER

A. Preformed joint filler material shall be of the preformed non-extruding type joint filler constructed of cellular neoprene sponge rubber or polyurethane of firm texture. Bituminous fiber type will not be permitted. All non-extruding and resilient-type preformed expansion joint fillers shall conform to the requirements and tests set forth in ASTM D1752 for Type I, except as otherwise specified herein.

2.03 BACKING ROD

A. Backing rod shall be an extruded closed-cell, polyethylene foam rod. The material shall be compatible with the joint sealant material used and shall have a tensile strength of not less than 40 psi and a compression deflection of approximately 25

percent at 8 psi. The rod shall be 1/8-inch larger in diameter than the joint width except that a one-inch diameter rod shall be used for a ¾-inch wide joint.

PART 3 - EXECUTION

3.01 JOINT SEALERS

A. Joint sealed areas shall be sandblasted or roughened and blown clean of dust and sand with compressed air before the material may be applied.

B. Joints shall be primed (if required) and the sealant shall be applied in accordance with the manufacturer's instructions.

*** END OF SECTION ***

SECTION 03300

CAST IN PLACE CONCRETE

PART 1 - GENERAL

1.1 DESCRIPTION

Contractor shall provide all tools, equipment, materials, labor and services for furnishing, placing, finishing and curing concrete to the grades and dimensions shown on the Contract Drawings and as specified herein. Where any permit requirements exceed the requirements of this Section, the permit requirements shall govern.

1.2 SYSTEM

The Work of this Section shall include the construction of cast in place and precast concrete for site improvements, specified herein, or shown on the Contract Drawings.

Earthwork is included in Section 02350 of these specifications.

1.3 STANDARD SPECIFICATIONS

Except as otherwise indicated in this Section of the Specifications, the work to be done shall be performed or executed in accordance with the Special Provisions and the General Provisions included herewith and the **Standard Specifications,** State of California, Department of Transportation, latest edition, hereinafter referred to as the "Standard Specifications," and the **Standard Specifications for Public Works Construction (SSPWC),** latest edition, hereinafter referred to as the "SSPWC" Specifications; the **Standards Plans for Public Works Construction**, latest edition; **The State of California Department of Transportation Standard Plans**, latest edition; and the **City of Redlands Standard Plans**.

In case of conflict between any requirements set forth in this Section, the Contract Drawings, and any provisions of the foregoing Standard Specifications, then the requirements shown on the Contract Drawings shall govern over the requirements set forth herein and the requirements of the SSPWC.

1.4 SUBMITTALS

Contractor shall submit Certificates of Compliance, signed by the manufacturer for concrete mix design, including aggregates, cement, fly ash and reinforcing steel.

Contractor shall submit additional supporting data upon request of the Engineer.

1.5 CONCRETE TESTING

Contractor shall perform compressive strength testing of concrete as directed by the City. Testing shall be performed by a materials lab pre-approved by the City. Compressive strength tests shall be conducted for the generator slab. A total of four (4) cylinders shall be prepared and tested for each pour. All costs associated with concrete testing shall be included in the Contractor's bid proposal for the project.

PART 2 – MATERIALS

2.1 CONCRETE MATERIALS

Conform to the applicable portions of Section 201 of the SSPWC except as modified herein: Certificates of compliance, signed by the manufacturer, shall be furnished for all cement and fly ash. Supporting data shall be furnished upon request of the Engineer.

A. Mix design strength shall be 4500 psi as shown on the Contract Drawings or specified herein.

B. Portland Cement shall be Type V conforming to ASTM C150.

C. Water-cementitious ratio shall not exceed 0.45.

D. Maximum slump shall not exceed 5-inches except a maximum slump of 8-inches is permitted after introduction of and approved superplasticizer.

E. Maximum aggregate size shall be 1”

F. Membrane curing compound shall be Type 1-D – Clear or translucent with fugitive dye.

G. Calcium Chloride shall not be allowed.

2.2 TRANSIT MIXED CONCRETE CERTIFICATION

A. The manufacturer of the concrete shall furnish to the purchaser with each batch of concrete before unloading at the job-site, a delivery ticket on which is printed, stamped or written information concerning the concrete mix as follows:

1. Name of ready-mix batch plant.
2. Serial number of delivery ticket.
3. Date and truck number.
4. Name of Contractor.
5. Work site name and location.
6. Mix design or designation.
7. Quantity of concrete.
8. Time and date of batching (time of first mixing of cement, admixtures and aggregates).
9. Type and brand of cement.
10. Type, brand and weight of admixtures.
11. Amount of cement (weight in pounds per cubic yard).

12. Quantity of water (gallons) including moisture in aggregates.

13. Space for water added at job-site (gallons) and name/initials of person authorizing the added water.

B. Not furnishing the above information shall be grounds for rejecting the concrete mix.

2.3 REINFORCEMENT

Conform to the applicable portions of Section 201 of the SSPWC except as modified herein:

A. Reinforcing bars shall be Grade 60 steel conforming to ASTM A 615.

B. Welded Wire Fabric shall conform to ASTM A 185. Wire gauge and dimensions shall be as shown on the Contact Drawings.

2.4 CONCRETE FORMS

Conform to applicable portions of Section 303 of the SSPWC and the Local Agency standards except as modified herein:

A. All reinforced concrete structures shall have both inside and outside forms and shall conform to Section 303-1.3.

B. Curbs, Walks, Gutters, Cross Gutters, Alley Intersections, Access Ramps and Driveways shall conform to Section 303-5 and the Local Agency Standards. In cases of conflict the Local Agency Standards shall prevail.

2.5 CRUSHED ROCK

Crushed Rock shall be 1 Inch (25 mm) in conformance with Section 200-1.2 Table 200-1.2.1 (A) of the SSPWC.

2.7 PREMOLDED JOINT FILLER

Premolded joint filler material shall conform to Section 201-3 of the SSPWC unless otherwise shown on the plans or required by local agency standards.

2.8 JOINT SEALANT

Joint sealant shall conform to Section 201-3 of the SSPWC unless otherwise shown on the plans or required by local agency standards.

2.9 BONDING AGENT

Unless otherwise indicated, epoxy bonding agent shall be two-component, solvent-free, moisture insensitive, epoxy resin material conforming to ASTM C881. Bonding agent shall be Sikadur 32 Hi-Mod by SIKA Corporation (no substitutions).

PART 3 - EXECUTION

3.1 GENERAL

All concrete work shall conform to the applicable portions of Section 303 of the SSPWC, the Contract Drawings and Local Agency Requirements.

A. Concrete shall be delivered to the work site in Transit Mixers (Transit mix concrete trucks) in accordance with Section 201-1.4.3 of the SSPWC. Certified weigh master certificates shall be delivered with each transit mix truck.

Hand mixing (1 cy or less) will be permitted in accordance with Section 201-1.4.4 of the SSPWC.

3.1 REINFORCING STEEL

Reinforcing steel shall be placed in accordance with the Contract drawings and Section 303-1.7 of the SSPWC.

3.2 CONCRETE STRUCTURES

A. Structural concrete shall be placed in accordance with the Contract drawings and Section 303-1.8 of the SSPWC.

B. Compacted crushed rock (6-inch thick minimum) shall be placed as base material under all structures and compacted to a minimum of 90% per ASTM D1557, unless shown otherwise on the Contract Drawings.

C. Surface finish for floors and slabs shall be in accordance with Section 302-6.4 of the SSPWC. After floating, hand steel trowel in a smooth hard even finish free from high or low spots or other defects.

D. All concrete shall be cured by water or membrane compound methods in accordance with Section 303-1.10 of the SSPWC.

3.3 JOINTS

Joints shall comply with Section 303-1.8.6 or the SSPWC unless otherwise shown on the Drawings.

3.4 JOINT SEALANT

The application of joint sealant shall comply with Section 303-1.8.7 of the SSPWC unless otherwise shown on the drawings.

*** END OF SECTION ***

SECTION 03600

GROUT

PART 1 - GENERAL

1.1 THE REQUIREMENT

A. Furnish all labor, materials, equipment and incidentals required and install grout complete as shown on the contract drawings and as specified herein.

1.2 RELATED WORK SPECIFIED ELSEWHERE

A. Section 03300 – Cast-In-Place Concrete.

B. Section 05500 - Miscellaneous Metalwork.

1.3 SUBMITTALS

A. Submit to the Engineer, in accordance with Sub-Section 1.23.0 of Special Provisions showing materials of construction and details of installation for:

1. Commercially manufactured nonshrink cementitous grout. The submittal shall include catalogue cuts, technical data, storage requirements, product life, working time after mixing, temperature considerations, conformity to required ASTM standards and Material Safety Data Sheet.

2. Commercially manufactured nonshrink epoxy grout. The submittal shall include catalogue cuts, technical data, storage requirements, product life, working time after mixing, temperature considerations, conformity to required ASTM standards and Material Safety Data Sheet.

B. Samples

1. Samples of commercially manufactured grout products when requested by the Engineer.

C. Qualifications

1. Grout manufacturers shall submit documentation that they have at least 10 years experience in the production and use of the proposed grouts which they will supply.

1.4 REFERENCE STANDARDS

A. American Society for Testing and Materials (ASTM)

1. ASTM C531 - Standard Test Method for Linear Shrinkage and Coefficient of Thermal Expansion of Chemical Resistant Mortars, Grouts, and Monolithic Surfacings and Polymer Concretes

2. ASTM C579 - Standard Test Methods for Compressive Strength of Chemical Resistant Mortars, Grouts, Monolithic Surfacings, and Polymer Concretes

3. ASTM C827 - Standard Test Method for Change in Height at Early Ages of Cylindrical Specimens from Cementitious Mixtures

4. ASTM C1107 - Standard Specification for Packaged Dry, Hydraulic-Cement Grout (Nonshrink)

5. ASTM D695 - Standard Test Method for Compressive Properties of Rigid Plastics

B. U.S. Army Corps of Contractors Standard (CRD)

1. CRD C-621 - Corps of Contractors Specification for Nonshrink Grout

C. Where reference is made to one of the above standards, the revision in effect at the time of bid opening shall apply.

1.5 QUALITY ASSURANCE

A. Qualifications

Grout manufacturer shall have a minimum of 10 years experience in the production and use of the type of grout proposed for the work.

B. Pre-installation Conference

Well in advance of grouting, hold a pre-installation meeting to review the requirements for surface preparation, mixing, placing and curing procedures for each product proposed for use. Parties concerned with grouting shall be notified of the meeting at least 10 days prior to its scheduled date.

C. Services of Manufacturer's Representative

A qualified field technician of the nonshrink grout manufacturer, specifically trained in the installation of the products, shall attend the pre-installation conference and shall be present for the initial installation of each type of nonshrink grout. Additional services shall also be provided, as required, to correct installation problems.

D. Field Testing

All field testing and inspection services required shall be provided by the Contractor. The Contractor shall assist in the sampling of materials and shall provide any ladders, platforms, etc., for access to the work. The methods of testing shall comply in detail with the applicable ASTM Standards.

1.6 DELIVERY, STORAGE AND HANDLING

A. Deliver materials to the jobsite in original, unopened packages, clearly labeled with the manufacturer's name, product identification, batch numbers and printed instructions.

B. Store materials in full compliance with the manufacturer's recommendations. Total storage time from date of manufacture to date of installation shall be limited to 6 months or the manufacturer's recommended storage time, whichever is less.

C. Material which becomes damp or otherwise unacceptable shall be immediately removed from the site and replaced with acceptable material at no additional expense to the Owner.

D. Nonshrink cement-based grouts shall be delivered as preblended, prepackaged mixes requiring only the addition of water.

E. Nonshrink epoxy grouts shall be delivered as premeasured, prepackaged, component systems requiring only blending as directed by the manufacturer.

1.7 DEFINITIONS

A. Nonshrink Grout: A commercially manufactured product that does not shrink in either the plastic or hardened state, is dimensionally stable in the hardened state and bonds to a clean base plate.

PART 2- PRODUCTS

2.1 GENERAL

A. The use of a manufacturer's name and product or catalog number is for the purpose of establishing the standard of quality desired.

B. Like materials shall be the products of one manufacturer or supplier in order to provide standardization of appearance.

2.2 MATERIALS

A. Nonshrink Cementitious Grout

1. Nonshrink cementitious grout shall be Sika Grout 212 by Sika Corp (no substitutions).

B. Nonshrink Epoxy Grout

Nonshrink epoxy-based grout shall be Sikadur 42 Grout-Pak PT by Sika Corp (no substitutions).

C. Water

Potable water, free from injurious amounts of oil, acid, alkali, organic matter, or other deleterious substances.

PART 3 – EXECUTION

3.1 PREPARATION

A. Grout shall be placed over cured concrete which has attained its full design strength unless otherwise approved by the Engineer.

B. Concrete surfaces to receive grout shall be clean and sound; free of ice, frost, dirt, grease, oil, curing compounds, laitance and paints and free of all loose material or foreign matter which may affect the bond or performance of the grout.

C. Roughen concrete surfaces by chipping, sandblasting, or other mechanical means to ensure bond of the grout to the concrete. Remove loose or broken concrete. Irregular voids or projecting coarse aggregate need not be removed if they are sound, free of laitance and firmly embedded into the parent concrete.

1. Air compressors used to clean surfaces in contact with grout shall be the oilless type or equipped with an oil trap in the air line to prevent oil from being blown onto the surface.

D. Remove all loose rust, oil or other deleterious substances from metal embedments or bottom of base plates prior to the installation of the grout.

E. Epoxy-based grout does not require the saturation of the concrete substrate. Surfaces in contact with epoxy grout shall be completely dry before grouting.

F. Construct grout forms or other leak-proof containment as required. Forms shall be lined or coated with release agents recommended by the grout manufacturer. Forms shall be of adequate strength, securely anchored in place and shored to resist the forces imposed by the grout and its placement.

1. Forms for epoxy grout shall be designed to allow the formation of a hydraulic head and shall have chamfer strips built into forms.

G. Level and align the structural or equipment bearing plates in accordance with the structural requirements and the recommendations of the equipment manufacturer.

H. Level and align the structural or equipment bearing plates in accordance with the structural requirements and the recommendations of the equipment manufacturer.

3.2 INSTALLATION - GENERAL

A. Mix, apply and cure products in strict compliance with the manufacturer's recommendations and this Section.

B. Have sufficient manpower and equipment available for rapid and continuous mixing and placing. Keep all necessary tools and materials ready and close at hand.

C. Maintain temperatures of the foundation plate, supporting concrete, and grout between 40 and 90 degrees F during grouting and until grout compressive strength reaches 1000 psi or as recommended by the grout manufacturer, whichever is longer. Take precautions to minimize differential heating or cooling of baseplates and grout during the curing period.

D. Take special precautions for hot weather or cold weather grouting as recommended by the manufacturer when ambient temperatures and/or the temperature of the materials in contact with the grout are outside of the 60 and 90 degrees F range.

E. Install grout in a manner which will preserve the isolation between the elements on either side of the joint where grout is placed in the vicinity of an expansion or control joint.

F. Reflect all existing underlying expansion, control and construction joints through the grout.

3.3 INSTALLATION - NONSHRINK CEMENTITIOUS GROUTS

A. Mix in accordance with manufacturer's recommendations. Do not add cement, sand, pea gravel or admixtures without prior approval by the Engineer.

B. Mixing in a mortar mixer (with moving blades) is required. Hand mixing shall be permitted only with the express permission of the Engineer. Pre-wet the mixer and empty excess water. Add pre-measured amount of water for mixing, followed by the grout. Begin with the minimum amount of water recommended by the manufacturer and then add the minimum additional water required to obtain workability. Do not exceed the manufacturer's maximum recommended water content.

C. Placements greater than 3 inches in depth shall include the addition of clean, washed pea gravel to the grout mix when approved by the manufacturer. Comply with the manufacturer's recommendations for the size and amount of aggregate to be added.

D. Place grout into the designated areas in a manner which will avoid segregation or entrapment of air. Do not vibrate grout to release air or to consolidate the material. Placement should proceed in a manner which will ensure the filling of all spaces and provide full contact between the grout and adjoining surfaces. Provide grout holes as necessary.

E. Place grout rapidly and continuously to avoid cold joints. Do not place cementitious grout in layers. Do not add additional water to the mix (retemper) after initial stiffening.

F. Just before the grout reaches its final set, cut back the grout to the substrate at a 45 degree angle from the lower edge of bearing plate unless otherwise approved by the Engineer. Finish this surface with a wood float (brush) finish.

G. Begin curing immediately after form removal, cutback, and finishing. Keep grout moist and within its recommended placement temperature range for at least 24 hours after placement or longer if recommended by the manufacturer. Saturate the grout surface by use of wet burlap, soaker hoses, ponding or other approved means. Provide sunshades as necessary. If drying winds inhibit the ability of a given curing method to keep grout moist, erect wind breaks until wind is no longer a problem or curing is finished.

3.4 INSTALLATION - NONSHRINK EPOXY GROUTS

A. Mix in accordance with the procedures recommended by the manufacturer. Do not vary the ratio of components or add solvent to change the consistency of the grout mix. Do not overmix. Mix full batches only to maintain proper proportions of resin, hardener and aggregate.

B. Monitor ambient weather conditions and contact the grout manufacturer for special placement procedures to be used for temperatures below 60 or above 90 degrees F.

C. Place grout into the designated areas in a manner which will avoid trapping air. Placement methods shall ensure the filling of all spaces and provide full contact between the grout and adjoining surfaces. Provide grout holes as necessary.

D. Minimize "shoulder" length (extension of grout horizontally beyond base plate). In no case shall the shoulder length of the grout be greater than the grout thickness.

E. Finish grout by puddling to cover all aggregate and provide a smooth finish. Break bubbles and smooth the top surface of the grout in conformity with the manufacturer's recommendations.

F. Epoxy grouts are self curing and do not require the application of water. Maintain the formed grout within its recommended placement temperature range for at least 24 hours after placing, or longer if recommended by the manufacturer.

3.5 SCHEDULE

A. The following list indicates where the particular types of grout are to be used:

1. General purpose nonshrink cementitious grout: Use at all locations where non shrink grout is called for on the plans except for base plates greater in area than 3 feet wide by 3 feet long and except for the setting of anchor rods, anchor bolts or reinforcing steel in concrete.

2. Flowable nonshrink cementitious grout: Use under all base plates greater in area than 3 feet by 3 feet. Use at all locations indicated to receive flowable nonshrink grout by the contract drawings. The Contractor, at his/her option and convenience, may also substitute flowable nonshrink grout for general purpose nonshrink cementitious grout.

3. Nonshrink epoxy grout: Use for all locations specifically indicated to receive epoxy grout.

*** END OF SECTION ***

THIS PAGE INTENTIONALLY LEFT BLANK

SECTION 04220

REINFORCED CONCRETE MASONRY UNIT

PART 1 - GENERAL

1.1 DESCRIPTION

Contractor shall provide all tools, equipment, materials, labor and services for furnishing, placing, finishing and curing of reinforcing concrete masonry units, including reinforcing steel, grout and mortar, to the grades and dimensions shown on the Contract Drawings and as specified herein. Where any permit requirements exceed the requirements of this Section, the permit requirements shall govern.

1.2 SYSTEM

Work of this Section includes the construction of reinforced concrete masonry unit for site improvements specified herein and/or shown on the Contract Drawings.

A. Section 02350 Earthwork – Pipeline and Miscellaneous Structures

B. Section 03300 Cast-in-Place Concrete

C. Section 03600 Grout

1.3 STANDARD SPECIFICATIONS

A. Materials and construction shall conform to the California Building Code (CBC) requirements. The edition that has been adopted by the Local Agency at the time of this Contract shall be used along with the applicable sections of the Standard Specifications for Public Works Construction (latest edition) also known as the “Greenbook” and the Contract Drawings.

In case of conflict between any requirements set forth in the CBC, the “Greenbook” and the Contract Drawings the requirements set forth in the CBC shall govern over the “Greenbook” and the Contract Drawings and the Contract Drawings shall govern over the “Greenbook”.

Materials and construction shall comply with "TMS 402/602-16 Building Code Requirements and Specification for Masonry Structures,” as required and as modified in the California Building Code (CBC).

1.4 SUBMITTALS

A. Contractor shall submit copies of the manufacturer’s product information and installation for each item and accessory.

B. Contractor shall submit Certificates of Compliance, signed by the manufacturer that masonry units are in compliance with the requirements of these specifications and that all masonry units have been cured for a minimum of 28 days prior to delivery to the job site.

C. Contractor shall submit Certificates of Compliance, signed by the manufacturer that the Water Based Clear Water Repellent Sealer is in compliance with the California Air Resources Board (CARB), the Local Air Quality Management District (AQMD) and the requirements of these specifications. Contractor shall also submit the manufacturer's product data sheets and their procedures and instructions for the application of the Sealer.

D. Contractor shall submit Certificates of Compliance, signed by the manufacturer that the Waterproofing is in compliance with the California Air Resources Board (CARB), the Local Air Quality Management District (AQMD) requirements and with the requirements of these specifications. Contractor shall also submit the manufacturer's product data sheets and their procedures and instructions for the application of the Waterproofing.

E. Contractor shall submit Mortar design mix.

F. Contractor shall submit Grout design mix.

G. Contractor shall submit Reinforcing steel certifications and shop drawings.

H. Contractor shall submit additional supporting data upon request of the Engineer.

I. Samples of concrete masonry unit colors with texture ranges as indicated shall be submitted to the Engineer for selection of the color in accordance with the requirements of Section 01340 - Submittals. Full size samples of the blocks selected shall be submitted for final approval by the Engineer after color selection, if requested. If the material indicated is a colored and textured unit, the samples submitted shall be colored and textured units. Samples of mortar colors shall be submitted for color selection by the Engineer.

J. A 4-foot minimum square free-standing sample panel shall be prepared for approval by the Engineer before starting masonry Work and shall remain at the Work site for reference until all masonry Work is completed.

1.5 DELIVERY, STORAGE & HANDLING

A. Immediately upon receipt at the work site, the Contractor shall store all cement and masonry products off the ground under dry, weather-tight, properly ventilated covers.

B. Aggregate storage piles shall afford good drainage, preclude inclusion of foreign matter, and preserve gradation.

1.6 ENVIRONMENTAL REQUIREMENTS

A. When ambient air temperature is 40° F or less, mortar materials shall be heated so that mortar is delivered to the mason's boards at 65°F minimum.

B. When ambient temperature is 90°F or greater, masonry materials shall be protected from sun and wind to prevent excessive evaporation of mix water.

C. Masonry work shall be protected from heat and water while work is in progress and for 48 hours after work is completed.

PART 2 - MATERIALS

2.1 CONCRETE MASONRY UNITS (CMU)

Provide CMU's complying with ASTM C90 and the following:

A. Manufacturer's standard open end units of medium weight.

B. CMUs shall be manufactured from Type II/V cement and shall have a minimum compressive strength of 2,000 psi (average of 3 units).

C. Provide special shapes where required for corners, pilasters, control joints, headers, bond beam and other special conditions. The color and texture of specially shaped blocks shall match that of the adjacent unit, unless otherwise shown on the Contract Drawings.

D. Nominal Dimensions, Texture and Color:

- CMUs block faces shall be as shown on the Contract Documents with face dimensions of 8" x 8" x 16", 12" x 8" x 16", or 8" x 4" x 16", unless otherwise shown on the Contract Drawings.
- Type of masonry units (texture) shall be selected by the City from provided samples.
- Color shall be selected by the City from provided samples.

2.2 REINFORCING STEEL

Provide deformed steel bars complying with ASTM A 615 Grade 60 as described in Section 03300, "Cast-in-Place Concrete".

2.3 MORTAR

A. Mortar shall be made with Portland Cement and shall be Type S in compliance with ASTM C270.

B. Hydrated lime shall be in compliance with ASTM C 207 Type S.

C. Color to match block unless otherwise shown on the Contract Drawings.

D. Mortar shall have a minimum 28 day compressive strength of 1,800 psi.

2.5 GROUT

A. Grout shall be in compliance with ASTM C476 and SSPWC 202-3.2.

B. Portland Cement Type II/V shall be used for grout mix.

C. Site mixed grout shall be coarse grout mix and shall be in compliance with the Standard Specifications for Public Works Construction (SSPWC) also known as the "Greenbook" Section 202-3.2.3 Site-mixed Grout.

D. Ready mixed grout shall be coarse grout mix and shall be in compliance with SSPWC Section 202-3.2.2 (Concrete Class 610-E-2000G) Ready-mixed Grout.

E. Grout shall have a minimum 28-day compressive strength of 2,000 psi.

F. Where grout quantity is less than two (2) cubic yards per placement (each day), grout may be Site-mixed and shall be in compliance with SSPWC Section 202-3.2.2.

G. Where daily project grout quantity is two (2) cubic yards or more per placement (each day), grout shall be Ready-mixed and shall be in compliance with SSPWC Section 202-3.2.3.

2.6 TRANSIT MIXED GROUT CERTIFICATION

A. The manufacturer of the grout shall furnish to the purchaser with each batch of grout, before unloading, at the job-site, a delivery ticket on which is printed, stamped or written information concerning the grout as follows:

1. Name of ready-mix batch plant.
2. Serial number of delivery ticket.
3. Date and truck number.
4. Name of Contractor.
5. Work site name and location.
6. Mix design or designation.
7. Quantity of grout.
8. Time and date of batching (time of first mixing of cement and aggregates).
9. Type and brand of cement.
10. Type, brand and weight of admixtures.
11. Quantity of cement (weight in pounds per cubic yard).
12. Quantity of water (gallons) including moisture in aggregates.

13. Space for water added at job-site (gallons) and name/initials of person authorizing.

B. Grout delivered to the job-site without the above information shall be grounds for rejecting the grout mix.

2.7 WATER

A. Water shall be in compliance with ASTM C476 and SSPWC Section 202-3.3.

2.8 WATER REPELLENT SEALER *(apply to all exposed block)*

A. Water repellent sealer shall be Enviroseal PBT, as manufactured by Hydrozo, water based for split-faced, lightweight and standard CMU or an approved equal. Do not apply directly to block which is to have a stucco coat.

2.9 FLUID APPLIED WATERPROOFING *(apply to all retaining structures, buried block)*

A. Fluid applied waterproofing shall be Sonoshield HLM 5000, as manufactured by Sonneborn. Waterproofing shall be one component moisture-curing, bitumen-modified polyurethane elastomeric material for use on below grade CMUs (non exposed) or an approved equal.

PART 3 - EXECUTION

All concrete block masonry work/operations shall be in conformance with the applicable sections of the CBC and SSPWC Section 303-4.1 except as herein modified.

3.1 PREPARATION

A. Contractor shall make sure all materials are on hand to proceed with work without delay or interruption.

B. Contractor shall inspect work area and make sure it is ready to accept the masonry work. The Contractor shall resolve/correct all deficiencies prior to starting any work.

C. Contractor shall remove laitance, loose aggregate, and anything that prevents mortar from bonding to foundation or other contact surfaces.

3.2 MORTAR

A. All mortar shall be thoroughly mixed in a power-operated batch mixer until batch is homogeneous and a uniform color. Mixer shall be thoroughly cleaned before and after each operation. Mixer shall be free of hardened mortar, water and lumps when dry ingredients are placed inside.

B. Workability or consistency of mortar on the board shall be such that it can be worked with the trowel. Water for tempering shall be available at all times.

C. All mortar which has begun to set or is not used within 1 1/2 hours after initial mixing shall not be used.

3.3 PLACING BLOCK

A. Cut and fit work for all openings around pipes, conduits, outlet boxes and adjoining contiguous work. Provide perfect fit and maintain jointing in exact alignment in both horizontal and vertical directions. All cutting of block shall be by use of carborundum, power operated masonry saws.

B. Construct concrete masonry plumb, true to line, with level courses built to height, thickness, and bond pattern required. Where no specific pattern is required, place masonry in running bond pattern. Use concrete masonry units that are sound, dry, clean, and free from ice and frost when placed.

C. Adjust each unit to final position in wall while mortar is still soft and plastic. Remove any unit disturbed after mortar has stiffened, and relay with fresh mortar.

D. Align vertical cells to be filled with grout to provide continuous unobstructed openings.

E. Solidly fill spaces around built-in items with mortar as each course is placed.

F. Install all anchors, conduit, wall plugs, accessories, and other items to be built in as masonry work progresses.

G. Place hollow units with full mortar embedment in starting courses on footings and solid foundation walls, and where adjacent to cells and cavities to be reinforced or filled with grout or concrete

H. Place hollow units with head joints tightly mortar bedded for a minimum depth from each face equal to the masonry unit face shell thickness.

I. Horizontal and vertical face joints shall be 3/8 inch thick unless otherwise required. Shove vertical mortar joints tight.

J. Tool mortar joints in exposed exterior and interior surfaces to be slightly concave. Tool covered joints flush. Point joints tight in unparged masonry below grade.

K. Remove mortar protrusions extending more than 1/2 inch into cells or cavities to be grouted.

L. In temperatures exceeding 100° F, do not lay out mortar beds ahead of placing of units. Use a very light fog spray, not sufficient to penetrate the masonry, on vertical surface of masonry to aid in mortar curing during first 24 hour after placing units.

M. Grout placement shall comply with TMS 402 and local standards. . Clean outs shall be allowed only on block surfaces that will be concealed in the final construction.

3.4 PLACING REINFORCING STEEL

A. General

Place reinforcing steel as shown on the Contract Drawings, per CBC, and SSPWC Section 303-4.1 and Section 03300 “Cast-in-Place Concrete” and as described herein.

B. Bar Reinforcing:

1. Provide clear distance between horizontal bars in a layer not less than the diameter of the bars, nor 1 inch, except that they may be bundled in pairs.

2. Provide clear distance between vertical bars not less than one and one-half times the bar diameter, nor 1 1/2 inch, except that they may be bundled in pairs.

3. Lay horizontal bars as work progresses.

4. Hold vertical bars in hollow unit masonry in place at 192 bar diameters or 10 feet maximum on center whichever is less. Provide a minimum of two (2) holds for all bars.

3.5 PLACING ANCHORS, TIES AND METAL ACCESSORIES

A. Install required anchors, ties and metal accessories as the masonry construction progresses.

B. Set bolts and inserts vertically in the top of walls, pilasters, beams or columns 3 inch minimum from any face in masonry 7 inch or more in thickness, and at the center line in thinner masonry sections.

C. Adjust shelf angles as required to keep the masonry level and at required elevation. Provide anchorage as detailed in the project documents.

D. Hold all metal accessories to masonry by firmly embedding anchorage into grout or mortar 3 inches minimum.

3.6 GROUTING

A. All grout shall conform to Sections 2.5 and 2.6 of this specification.

All site mixed grout shall be thoroughly mixed in a power-operated batch mixer until batch is homogeneous and a uniform color.

Mixer shall be thoroughly cleaned before and after each operation.

Mixer shall be free of hardened grout, water and lumps when dry ingredients are placed inside.

Slump of all grout shall be 8 to 11 inches.

B. Make sure all reinforcing steel, anchors and other embedments are set in required position and secure against displacement before grouting is started.

C. Freshly mix grout and place in cores and/or collar joints while fluid and before initial set has taken place. Puddle or vibrate grout into place when grout pours are 12 inches or less in height. Grout pours greater than 12 inches in height shall be consolidated by use of a mechanical vibration.

D. Grout beams over openings in one continuous operation.

E. Grout vertical cores per TMS 402. Stop grout pours 1 1/2 inches below a mortar joint, except at top of wall. Where bond beams are used stop grout pour 1/2 inch below top.

F. Solid grout all cells unless otherwise indicated on the plans.

G. Use coarse grout mix.

H. The grouting of any section of wall shall be completed in one day with no interruption greater than one hour.

I. Do not place grout until entire height of masonry to be grouted has attained sufficient strength to resist displacement of masonry units and breaking of mortar bond. Install shores and bracing, if required, before starting grouting operations.

J. Grout shall be placed within Ninety (90) minutes of batching. Grout over ninety (90) in age shall be rejected and removed from job-site.

3.7 TOLERANCES

A. Masonry:

1.	Bed Joint:	Thickness = + 1/8 inch
		Level = + 1/4 inch in 10 ft. and 1/2 inch max.
2.	Head Joint:	Thickness = + 1/8 inch
		Vertical Alignment = + 1/4 inch in 10 ft. and 1/2 inch max.
3.	Wall Alignment:	Vertical = + 1/4 inch in 10 ft. and 1/2 inch max.
		Horizontal = + 1/4 inch in 10 ft. and 1/2 inch max.

B. Reinforcing:

1. Vertical: Variation in spacing from face of masonry = + 1/4 inch.

   Variation in spacing in longitudinal run or masonry = + 2 inches.

2. Horizontal: Variation in spacing perpendicular to the face of masonry = + 1/4 inch.

3.8 FIELD QUALITY CONTROL

A. General

The Owner reserves right to sample and request testing of any or all of the materials delivered to the site as specified herein. Samples shall be provided by the Contractor at no additional cost to the Owner upon request. **Testing of grout shall be at the Contractors expense and shall be conducted for each pour.** All other testing shall be performed at the Owner's expense.

B. Concrete masonry units shall be sampled and tested in accordance with ASTM C140.

C. Mortar proportioning and construction of the field joint shall be continuously inspected.

D. Grout shall be sampled and tested in accordance with ASTM C1019.

E. Bar reinforcing steel shall be sampled and tested in accordance with SSPWC Section 201-2.4 or applicable CBC requirements.

F. Masonry Prisms shall be sampled and tested in accordance with ASTM C1314.

3.9 PROTECTION

A. Step back unfinished work for joining new work. Use toothing only when authorized by Engineer. Before laying new work, remove loose mortar and clean exposed joint.

B. Protect sills, ledges, and offsets from mortar drippings and other damage during construction.

C. Remove misplaced mortar and grout immediately and clean affected areas.

D. Protect face material from staining.

E. Keep masonry units dry. Keep the top of masonry construction covered with a waterproof covering when work is not in progress.

F. Temporarily brace masonry against horizontal loads until cured and permanently braced.

3.10 ADJUSTMENT AND CLEANING

A. Defective joints of masonry surfaces, except weep holes, shall be cut out, filled with mortar, and tooled to match adjacent joints.

B. Maintain masonry work as clean as possible during construction. Clean off excess mortar and do pointing as work progresses.

C. Remove mortar lumps and clean upon completion of masonry work. Commence work at top and work downward to finished floors or finished grade lines.

D. Clean surfaces using clean, fresh water, neutral soap and brushes with stiff fiber bristles. Do not use wire brushes, metal scrapers, acids, abrasives, cleaning compounds or sand blasting.

E. Masonry work damaged by climatic conditions or by any other cause prior to final acceptance of project shall be removed and reconstructed at Contractor's expense.

F. Do not load masonry work until grout and mortar have attained specified 28-day compressive strength.

G. Repair or replace to the satisfaction of the Engineer all blocks found to be cracked, damaged or aesthetically unacceptable at no additional cost.

3.11 WATER REPELLENT SEALER *(apply to all above grade block)*

A. All sealing material shall be delivered to the job-site in the manufacturer's original, unopened, undamaged, containers with identification labels intact.

B. Sealing material shall be stored at job-site in a cool, dry area. Stored material shall be protected so that the sealer temperature remains between 35° F and 100°F.

C. Water repellent sealer shall be applied to all exposed exterior CMUs (buildings and walls). Prior to sealing, CMU surfaces shall be inspected and approved by Construction Manager.

D. Water repellent sealer shall be applied in strict compliance with the manufacturer's product data sheets and instructions.

E. Water repellent sealer application rate shall be per manufactures recommendation.

F. Application shall be by low-pressure, non-atomizing spray starting from the bottom up.

G. CMU surfaces shall be clean and fully cured (28-days) prior to application.

H. Prior to sealer application, Contractor shall protect all landscaping, shrubs and surfaces that are to remain uncoated, with drop cloths and/or masking.

I. Immediately prior to sealer application, Contractor shall treat and remove all alkali and efflorescence with proper neutralizing compounds as recommended by the CMU manufacturer.

J. Immediately prior to sealer application, Contractor shall apply a mist coat to help break up surface tension to ensure maximum penetration of the sealer.

K. Contractor shall apply sealer to saturation by flooding CMU surfaces from the bottom up with a controlled 8 to10 inches material rundown to ensure maximum penetration into the CMUs.

L. Upon completion of the sealer operations, the Contractor shall immediately clean up and properly dispose of all debris remaining on the project site from the sealer application operations.

3.12 FLUID APPLIED WATERPROOFING *(apply to all retaining structures, below grade block)*

A. All waterproofing coating material shall be delivered to the job-site in the manufacturer's original, unopened, undamaged, containers with identification labels intact.

B. Waterproofing coating material shall be stored off ground at job-site in a cool, dry area. Stored material shall be protected so that the sealer temperature remains between 40° F and 80°F.

C. Waterproofing coating material shall be applied to all exterior non-exposed below grade CMUs (buildings and walls).

D. Waterproofing coating material shall be applied in strict compliance with the manufacturer's product data sheets and instructions.

E. Waterproofing coating application rate shall be 25 square feet per gallon (65 wet mils). Contractor shall verify the applied thickness with a Contractor furnished wet mil gauge as the work progresses.

F. Waterproofing coating shall be applied by trowel or roller (Contractor's option).

Contractor shall select and furnish the proper coating material for the application method that the Contractor has chosen to use (HLM 5000 T or HLM 5000 R). Contractor shall submit and obtain the Engineer's advanced approval for the chosen application method and material at the time of the required material submittal (Contractor shall allow a minimum of 60 days for review by the Engineer).

G. Upon completion of the waterproofing operations, the Contractor shall immediately clean up and properly dispose of all debris, remaining on the project site, from the waterproofing application operations.

*** END OF SECTION ***

THIS PAGE INTENTIONALLY LEFT BLANK

SECTION 05120

STRUCTURAL STEEL

PART 1 - GENERAL

1.01 WORK OF THIS SECTION

A. The Contractor shall furnish all labor, equipment, materials, and incidentals necessary for performing all operations of the Work for this Section as shown on the contract drawings and as specified herein.

1.02 RELATED SECTIONS

A. The Work of the following Sections applies to the Work of this Section. Other Sections of the Specifications, not referenced below, shall also apply to the extent required for proper performance of this Work.

1. Section 03600 - Grout
2. Section 05310 – Steel Roof Deck
3. Section 05500 - Miscellaneous Metalwork

1.03 REFERENCE SPECIFICATIONS, CODES AND STANDARDS

A. The Work of this Section shall comply with the current California Building Code (CBC) as adopted by the authority having jurisdiction over the Work.

B. Except as otherwise indicated in this Section, the Contractor shall comply with the 2015 edition of the Standard Specifications for Public Works Construction (SSPWC) together with the latest adopted editions of the Regional and Supplement Amendments.

1.04 DEFINITIONS

A. Structural Steel: Elements of structural-steel frame, as classified by AISC's "Code of Standard Practice for Steel Buildings and Bridges," that support design loads.

1.05 CONTRACTOR SUBMITTALS

Submit in accordance with Sub-Section 1.23.0 of Special Provisions the following:

A. Product Data: For each type of product indicated.

B. Shop Drawings: Show fabrication of structural-steel components.

1. Include details of cuts, connections, splices, camber, holes, and other pertinent data.
2. Include embedment drawings.
3. Indicate welds by standard AWS symbols, distinguishing between shop and field welds, and show size, length, and type of each weld.
4. Indicate type, size, and length of bolts, distinguishing between shop and field bolts. Identify pretensioned and slip-critical high-strength bolted connections.

C. Welding certificates.

D. Qualification Data: For Installer and fabricator.

E. Mill Test Reports: Signed by manufacturers certifying that the following products comply with requirements:

1. Structural steel including chemical and physical properties.
2. Bolts, nuts, and washers including mechanical properties and chemical analysis.
3. Direct-tension indicators.
4. Tension-control, high-strength bolt-nut-washer assemblies.
5. Shear stud connectors.
6. Shop primers.
7. Non-shrink grout.

F. Source quality-control test reports.

G. Samples

1. Submit two samples of Contractor's proposed load indicator bolts or direct tension indicators.

1.06 QUALITY ASSURANCE

A. Installer Qualifications: A qualified installer who participates in the AISC Quality Certification Program and is designated an AISC-Certified Erector, Category CSE.

B. Fabricator Qualifications: A qualified fabricator who participates in the AISC Quality Certification Program and is designated an AISC-Certified Plant, Category STD.

C. Shop-Painting Applicators: Qualified according to SSPC-QP 3, "Standard Procedure for Evaluating Qualifications of Shop Painting Applicators."

D. Welding: Qualify procedures and personnel according to AWS D1.1, "Structural Welding Code-Steel."

E. Comply with applicable provisions of the following specifications and documents:

1. AISC's "Code of Standard Practice for Steel Buildings and Bridges."

2. RCSC's "Specification for Structural Joints Using ASTM A 325 or A 490 Bolts."

F. Preinstallation Conference: Conduct conference at Project site.

1.07 DELIVERY, STORAGE, AND HANDLING

A. Store materials to permit easy access for inspection and identification. Keep steel members off ground and spaced by using pallets, dunnage, or other supports and spacers. Protect steel members and packaged materials from erosion and deterioration.

1. Store fasteners in a protected place. Clean and relubricate bolts and nuts that become dry or rusty before use.
2. Do not store materials on structure in a manner that might cause distortion, damage, or overload to members or supporting structures. Repair or replace damaged materials or structures as directed.
3. Handle material with cranes or derricks as far as practicable. Do not dump steel off cars or trucks nor handle in any other manner likely to cause damage.

1.08 COORDINATION

A. Furnish anchorage items to be embedded in or attached to other construction without delaying the Work. Provide setting diagrams, sheet metal templates, instructions, and directions for installation.

PART 2 - PRODUCTS

2.01 STRUCTURAL-STEEL MATERIALS

A. W-Shapes: ASTM A 992.

B. Channels, Angles: ASTM A 36.

C. Plate and Bar: ASTM A 36 and ASTM A 572, Grade 50.

D. Cold-Formed Hollow Structural Sections (HSS): ASTM A 500, Grade C, structural tubing.

E. Steel Pipe: ASTM A 53, Type E or S, Grade B.

1. Weight Class: as indicated.
2. Finish: Black, except where indicated to be galvanized.

F. Welding Electrodes: Comply with AWS requirements.

2.02 BOLTS, CONNECTORS, AND ANCHORS

A. High-Strength Bolts, Nuts, and Washers: ASTM A 325, Type 1, heavy hex steel structural bolts; ASTM A 563 heavy hex carbon-steel nuts; and ASTM F 436 hardened carbon-steel washers.

1. Finish: Hot-dip zinc coating, ASTM A 153, Class C.
2. Direct-Tension Indicators: ASTM F 959, Type 325 compressible-washer type.

a. Finish: Mechanically deposited zinc coating, ASTM B 695, Class 50, baked epoxy coated.

B. Tension-Control, High-Strength Bolt-Nut-Washer Assemblies: ASTM F 1852, Type 1, heavy hex or round head steel structural bolts with splined ends; ASTM A 563 heavy hex carbon-steel nuts; and ASTM F 436 hardened carbon-steel washers.

1. Finish: Mechanically deposited zinc coating, ASTM B 695, Class 50.

C. Shear Connectors: ASTM A 108, Grades 1015 through 1020, headed-stud type, cold-finished carbon steel; AWS D1.1, Type B.

D. Anchor Rods: ASTM F 1554, Grade 36 unless otherwise indicated.

1. Nuts: ASTM A 563 heavy hex carbon steel.
2. Plate Washers: ASTM A 36 carbon steel.
3. Washers: ASTM F 436 hardened carbon steel.
4. Finish: Hot-dip zinc coating, ASTM A 153, Class C.

2.03 GROUT

A. Cement Grout: Portland cement, ASTM C 150, Type II; and clean, natural sand, ASTM C 404, Size No. 2. Mix at ratio of 1 part cement to 2-1/2 parts sand, by volume, with minimum water required for placement and hydration.

B. Nonmetallic, Shrinkage-Resistant Grout: ASTM C 1107, factory-packaged, nonmetallic aggregate grout, noncorrosive, nonstaining, mixed with water to consistency suitable for application and a 30-minute working time.

2.04 FABRICATION

A. Structural Steel: Fabricate and assemble in shop to greatest extent possible. Fabricate according to AISC's "Code of Standard Practice for Steel Buildings and Bridges" and AISC's "Specification for Structural Steel Buildings" (ANSI/AISC 360-10).

1. Camber structural-steel members where indicated.
2. Identify high-strength structural steel according to ASTM A 6 and maintain markings until structural steel has been erected.

3. Mark and match-mark materials for field assembly.
4. Complete structural-steel assemblies, including welding of units, before starting galvanizing operations.

B. Thermal Cutting: Perform thermal cutting by machine to greatest extent possible.

1. Plane thermally cut edges to be welded to comply with requirements in AWS D1.1.

C. Bolt Holes: Cut, drill, or punch standard bolt holes perpendicular to metal surfaces.

D. Finishing: Accurately finish ends of columns and other members transmitting bearing loads.

E. Shear Connectors: Prepare steel surfaces as recommended by manufacturer of shear connectors. Use automatic end welding of headed-stud shear connectors according to AWS D1.1 and manufacturer's written instructions.

F. Holes: Provide holes required for securing other work to structural steel and for passage of other work through steel framing members.

1. Cut, drill, or punch holes perpendicular to steel surfaces. Do not thermally cut bolt holes or enlarge holes by burning.
2. Base-Plate Holes: Cut, drill, mechanically thermal cut, or punch holes perpendicular to steel surfaces.
3. Weld threaded nuts to framing and other specialty items indicated to receive other work.

2.05 SHOP CONNECTIONS

A. High-Strength Bolts: Shop install high-strength bolts according to RCSC's "Specification for Structural Joints Using ASTM A 325 or A 490 Bolts" for type of bolt and type of joint specified.

1. Joint Type: Pretensioned.

B. Weld Connections: Comply with AWS D1.1 for welding procedure specifications, tolerances, appearance, and quality of welds and for methods used in correcting welding work.

1. Unless otherwise noted, remove backing bars or runoff tabs, back gouge, and grind steel smooth.
2. Assemble and weld built-up sections by methods that will maintain true alignment of axes without exceeding tolerances of AISC's "Code of Standard Practice for Steel Buildings and Bridges" for mill material.
3. Verify that weld sizes, fabrication sequence, and equipment used for exposed structural steel will limit distortions to allowable tolerances.

a. Grind butt welds flush.

b. Grind or fill exposed fillet welds to smooth profile. Dress exposed welds.

2.06 GALVANIZING

A. Hot-Dip Galvanized Finish: Apply zinc coating by the hot-dip process to structural steel according to ASTM A 123.

1. Fill vent holes and grind smooth after galvanizing.

2. Galvanizing Repair Paint: ASTM A780.

2.07 SOURCE QUALITY CONTROL

A. Owner will engage an independent testing and inspecting agency to perform shop tests and inspections and prepare test reports.

1. Provide testing agency with access to places where structural-steel work is being fabricated or produced to perform tests and inspections.

B. Correct deficiencies in Work that test reports and inspections indicate does not comply with the contract documents.

C. Bolted Connections: Shop-bolted connections will be tested and inspected according to RCSC's "Specification for Structural Joints Using ASTM A 325 or A 490 Bolts."

D. Welded Connections: In addition to visual inspection, shop-welded connections will be tested and inspected according to AWS D1.1 and the following inspection procedures, at testing agency's option:

1. Liquid Penetrant Inspection: ASTM E 165.
2. Magnetic Particle Inspection: ASTM E 709; performed on root pass and on finished weld. Cracks or zones of incomplete fusion or penetration will not be accepted.
3. Ultrasonic Inspection: ASTM E 164.
4. Radiographic Inspection: ASTM E 94.

E. In addition to visual inspection, shop-welded shear connectors will be tested and inspected according to requirements in AWS D1.1 for stud welding and as follows:

1. Bend tests will be performed if visual inspections reveal either a less-than-continuous 360-degree flash or welding repairs to any shear connector.
2. Tests will be conducted on additional shear connectors if weld fracture occurs on shear connectors already tested, according to requirements in AWS D1.1.

PART 3 - EXECUTION

3.01 EXAMINATION

A. Verify elevations of concrete- and masonry-bearing surfaces and locations of anchor rods, bearing plates, and other embedments, with steel erector present, for compliance with requirements.

B. Proceed with installation only after unsatisfactory conditions have been corrected.

3.02 PREPARATION

A. Provide temporary shores, guys, braces, and other supports during erection to keep structural steel secure, plumb, and in alignment against temporary construction loads and loads equal in intensity to design loads. Remove temporary supports when permanent structural steel, connections, and bracing are in place, unless otherwise indicated.

1. Do not remove temporary shoring supporting composite deck construction until cast-in-place concrete has attained its design compressive strength.

3.03 ERECTION

A. Set structural steel accurately in locations and to elevations indicated and according to AISC's "Code of Standard Practice for Steel Buildings and Bridges" and "Specification for Structural Steel Buildings" (ANSI/AISC 360-10).

B. Base and Bearing Plates: Clean concrete- and masonry-bearing surfaces of bond-reducing materials, and roughen surfaces prior to setting base and bearing plates. Clean bottom surface of base and bearing plates.

1. Set base and bearing plates for structural members on wedges, shims, or setting nuts as required.
2. Weld plate washers to top of base plate.
3. Snug-tighten or Pretension anchor rods after supported members have been positioned and plumbed. Do not remove wedges or shims but, if protruding, cut off flush with edge of base and bearing plate before packing with grout.
4. Promptly pack grout solidly between bearing surfaces and base and bearing plates so no voids remain. Neatly finish exposed surfaces; protect grout and allow to cure. Comply with manufacturer's written installation instructions for shrinkage-resistant grouts.

C. Maintain erection tolerances of structural steel within AISC's "Code of Standard Practice for Steel Buildings and Bridges."

D. Align and adjust various members forming part of complete frame or structure before permanently fastening. Before assembly, clean bearing surfaces and

other surfaces that will be in permanent contact with members. Perform necessary adjustments to compensate for discrepancies in elevations and alignment.

1. Level and plumb individual members of structure.
2. Make allowances for difference between temperature at time of erection and mean temperature when structure is completed and in service.

E. Splice members only where indicated.

F. Remove erection bolts on welded, exposed structural steel; fill holes with plug welds; and grind smooth at exposed surfaces.

G. Do not use thermal cutting during erection unless approved by Engineer. Finish thermally cut sections within smoothness limits in AWS D1.1.

H. Do not enlarge misaligned holes in members by burning or using drift pins. Ream holes that must be enlarged to admit bolts.

I. Shear Connectors: Prepare steel surfaces as recommended by manufacturer of shear connectors. Use automatic end welding of headed-stud shear connectors according to AWS D1.1 and manufacturer's written instructions.

3.04 FIELD CONNECTIONS

A. High-Strength Bolts: Install high-strength bolts according to RCSC's "Specification for Structural Joints Using ASTM A 325 or A 490 Bolts" for type of bolt and type of joint specified.

1. Joint Type: Pretensioned.

B. Weld Connections: Comply with AWS D1.1 for welding procedure specifications, tolerances, appearance, and quality of welds and for methods used in correcting welding work.

1. Comply with AISC's "Code of Standard Practice for Steel Buildings and Bridges" and "Specification for Structural Steel Buildings" (ANSI/AISC 360-10) for bearing, adequacy of temporary connections and alignment.
2. Remove backing bars or runoff tabs, back gouge, and grind steel smooth unless otherwise indicated.
3. Assemble and weld built-up sections by methods that will maintain true alignment of axes without exceeding tolerances of AISC's "Code of Standard Practice for Steel Buildings and Bridges" for mill material.
4. Verify that weld sizes, fabrication sequence, and equipment used for exposed structural steel will limit distortions to allowable tolerances.

    a. Grind butt welds flush.
    b. Grind or fill exposed fillet welds to smooth profile. Dress exposed welds.

3.05 FIELD QUALITY CONTROL

A. Field Testing

1. Allow the Engineer free access to work. Notify the Engineer in writing 4 working days in advance of high strength bolting and field welding operations, including pre-installation verification of high strength bolt assemblies.

2. Fastener assemblies which include bolts to be pre-tensioned shall be tested on site in a tension calibrator for pre-installation verification in accordance with the AISC Specification for Structural Joints using ASTM A325 Bolts.

3. All high strength bolting will be inspected visually. High strength bolts to be pre-tensioned by the turn-of-nut method shall have the turned portion marked with reference to the steel being connected after the nut has been made snug and prior to final tightening. Retighten rejected bolts of remove and provide new bolts. In cases of disputed bolt installations, the bolts in question shall be checked using a calibrated wrench, at no additional cost to the Agency.

4. Field welding will be inspected visually. Comply with all requests of inspectors to correct deficiencies.

5. The fact that steel work has been accepted at the shop and mill will not prevent its final rejection at the site, before or after erection, if it is found to be defective.

6. Remove rejected steel work from the site within 10 working days after notification of rejection.

B. Testing Agency: Agency will engage a qualified independent testing and inspecting agency to inspect field welds and high-strength bolted connections.

C. Bolted Connections: Shop-bolted connections will be tested and inspected according to RCSC's "Specification for Structural Joints Using ASTM A 325 or A 490 Bolts."

D. Welded Connections: Field welds will be visually inspected according to AWS D1.1.

1. In addition to visual inspection, field welds will be tested according to AWS D1.1 and the following inspection procedures, at testing agency's option:

   a. Liquid Penetrant Inspection: ASTM E 165.
   b. Magnetic Particle Inspection: ASTM E 709; performed on root pass and on finished weld. Cracks or zones of incomplete fusion or penetration will not be accepted.
   c. Ultrasonic Inspection: ASTM E 164.
   d. Radiographic Inspection: ASTM E 94.

E. In addition to visual inspection, test and inspect field-welded shear connectors according to requirements in AWS D1.1 for stud welding and as follows:

1. Perform bend tests if visual inspections reveal either a less-than- continuous 360-degree flash or welding repairs to any shear connector.
2. Conduct tests on additional shear connectors if weld fracture occurs on shear connectors already tested, according to requirements in AWS D1.1.

F. Correct deficiencies in Work that test reports and inspections indicate does not comply with the contract documents.

3.06 REPAIRS AND PROTECTION

A. Repair damaged galvanized coatings on galvanized items with galvanized repair paint according to ASTM A 780 and manufacturer's written instructions.

*** END OF SECTION ***

SECTION 05220

CONCRETE BOLTS

PART 1 - GENERAL

1.01 WORK OF THIS SECTION

A. The Contractor shall provide concrete anchor bolts, inserts, complete, in accordance with the contract documents. Principal items are anchor bolts placed in concrete, adhesive anchors, and drilled anchors.

1.02 RELATED SECTIONS

A. The work of the following sections apply to the work of this section. Other sections, not referenced below, shall apply to the extent required for proper performance of the work.

1. Section 03200 Reinforcement Steel
2. Section 03300 Cast-in-Place Concrete
3. Steel supports hangers, brackets and other miscellaneous items such as bolts accessory to mechanical and electrical installations indicated or detailed on the contract drawings and in Divisions 11, 13, 15 and 16 (where apply).

1.03 REFERENCE, SPECIFICATIONS, CODES AND STANDARDS

A. Except as otherwise indicated in this section of the specifications, the Contractor shall comply with the latest adopted editions of the Standard Specifications for Public Works Construction (SSPWC), together with the latest adopted editions of the Regional Amendments.

B. The latest edition of the California Building Code (CBC).

C. Federal Specifications (Current Edition):

MIL-A-907E	Antiseize Thread Compound, High Temperature

D. ASTM Standards in Building Codes (Current Edition):

ASTM A193	Specification for Alloy-Steel and Stainless Steel Bolting for High Temperature or High Pressure Service and other Special Purpose Applications
ASTM A194	Specification for Carbon and Alloy Steel Nuts for Bolts for High Pressure or High Temperature Service, or Both
ASTM A276	Specification for Stainless Steel Bars and Shapes
ASTM F593	Specification for Stainless Steel Bolts, Hex Cap Screws, and Studs
ASTM F594	Specification for Stainless Steel Nuts

1.04 CONTRACTOR SUBMITTALS

A. Shop Drawings: Shop drawings of all concrete bolts shall be submitted to the Engineer for review in accordance with Sub-Section 1.23.0 of Special Provisions.

B. An ICC Evaluation Service, Inc. report listing the ultimate load capacity in tension and shear for each size and type of adhesive concrete anchor used shall be submitted for review. The Contractor shall submit manufacturer's recommended installation instructions and procedures for all adhesive anchors for review and approval. The Contractor shall follow approved procedures during installation of concrete anchors.

C. No substitution for the indicated adhesive anchors will be considered unless accompanied with ICC Evaluation Services, Inc. report verifying strength and material equivalency, including temperature at which load capacity is reduced to 90 percent of that determined at 75 degrees F.

PART 2 - PRODUCTS

2.01 GENERAL REQUIREMENTS

A. Anchor Bolts: Unless otherwise indicated, anchor bolts shall be fabricated of materials as follows:

1. Stainless steel bolts, nuts, washers	ASTM F 593, Type 316
2. Stainless Steel nuts	ASTM F594, Type 316
3. Plates and washers	ASTM A276

B. Buried or Submerged Bolts: Unless other corrosion-resistant bolts are indicated, all bolts, anchor bolts, nuts and washers which are buried, submerged, or below the top of the wall inside any hydraulic structure shall be Type 316 stainless steel conforming to ASTM A193 for bolts and to ASTM A194 for nuts. All threads on stainless steel bolts shall be protected with an antiseize lubricant suitable for submerged stainless steel bolts, to meet government specification MIL-A-907E.

1. Antiseize lubricant shall be classified as acceptable for potable water use.
2. Antiseize lubricant shall be "PURE WHITE" by Anti-Seize Technology, Franklin Park, IL 60131, AS-470 by Dixon Ticonderoga Company, Lakehurst, NJ, 08733, or approved equal.

C. Bolt Requirements:

1. All bolts and cap screws shall have hexagon heads and nuts shall be Heavy Hexagon Series (where apply).
2. The length of all bolts shall be such that after joints are made up, each bolt shall extend through the entire nut, but in no case, more than 1/2 inch beyond the nut.

D. Epoxy Adhesive Anchors: Grout for epoxy adhesive anchors shall be as specified on the contract drawings. No substitutions will be considered unless accompanied with ICC evaluations Services, Inc., report verifying strength and material equivalency.

PART 3 - EXECUTION

3.01 FABRICATION AND INSTALLATION REQUIREMENTS

A. Fabrication and Installation: Except as otherwise indicated, the fabrication and installation of anchor bolts shall conform to the requirements of the American Institute of Steel Construction “Steel Construction Manual".

B. Install adhesive and drilled anchor bolts in accordance with method specified in the ICC evaluation report for manufacturer product.

3.02 INSPECTION

A. The Agency reserves the right to inspect all materials and workmanship covered in this section. Such inspections will not relieve the Contractor of its responsibility to furnish materials and workmanship in accordance with the specifications. If inspections indicate that the materials or workmanship are defective, the Contractor shall remove and replace the defective work at no additional cost to the Agency.

*** END OF SECTION ***

THIS PAGE INTENTIONALLY LEFT BLANK

SECTION 05500

MISCELLANEOUS METALWORK

PART 1 - GENERAL

1.01 WORK OF THIS SECTION

A. The Contractor shall provide miscellaneous metals and appurtenances, complete, in accordance with the contract documents.

B. Work included in this section. Principal items covered are:

1. Shop/erection drawings and samples.
2. Ladders.
3. Stairs.
4. Metal grating.
5. Welding electrodes.
6. Bolts (not including bolts associated with piping or pipe installation).
7. Shop prime paint.
8. Pipe rails and railings.
9. Pipe and conduit supports and bracing.
10. Embedded steel channel and angle frames.
11. Warning signs.

1.02 RELATED SECTIONS

A. The work of the following sections apply to the work of this section. Other sections, not referenced below, shall also apply to the extent required for proper performance of this work.

1. Section 03200 Reinforcement Steel
2. Section 03300 Cast-in-Place Concrete
3. Section 03314 Strand Wound, Prestressed Concrete Tank
4. Section 05220 Concrete Bolts
5. Steel supports, hangers, brackets and other miscellaneous items such as bolts accessory to mechanical and electrical installations indicated on the contract drawings or covered in Divisions 11, 13, 15 and 16 (where applicable).

1.03 REFERENCE SPECIFICATIONS, CODES AND STANDARDS

A. Except as otherwise indicated in this section of the specifications, the Contractor shall comply with the latest adopted edition of the Standard Specifications for Public

Works Construction (SSPWC), together with the latest adopted editions of the Regional Amendments.

B. The latest edition of the California Building Code (CBC).

C. Except as otherwise indicated, the current editions of the following commercial standards apply to the work of this section:

1. Commercial Standards:

Aluminum Design Manual	Aluminum Association
AISC 360	Specification for Structural Steel Buildings
AISC 303	Code of Standard Practice for Steel Buildings and Bridges
AISC	Steel Design Guide 27 – Structural Stainless Steel
AISI MANUAL	Cold-Formed Steel Design
AWS D1.1	Structural Welding Code – Steel
AWS D1.2	Structural Welding Code – Aluminum
AWS D1.6	Structural Welding Code – Stainless Steel
AWS QC1	AWS Certification of Welding Inspectors
NFPA 101	Life Safety Code

2. ASTM Standards in Building Codes:

ASTM A36	Specification for Structural Steel
ASTM A48	Specification for Gray Iron Castings
ASTM A53	Specification for Pipe, Steel, Black and Hot-Dipped, Zinc-Coated Welded and Seamless
ASTM A123	Specifications for Zinc (Hot-Dip Galvanized) Coatings on Iron and Steel Products
ASTM A153	Specification for Zinc Coating (Hot-Dip) on Iron and Steel Hardware
ASTM A167	Specification for Stainless and Heat-Resisting Chromium-Nickel Steel Plate, Sheet and Strip
ASTM A193	Specification for Alloy-Steel and Stainless Steel Bolting Materials for High-Temperature Service
ASTM A194	Specification for Carbon and Alloy Steel Nuts for Bolts for High Pressure and High-Temperature Service
ASTM A276	Specification for Stainless and Heat-Resisting Steel Bars and Shapes
ASTM A283	Specification for Low and Intermediate Tensile Strength Carbon Steel Plates

ASTM A307	Specification for Carbon Steel Bolts, Studs, and Threaded Rod 60,000 PSI Tensile Strength
ASTM A312	Specification for Seamless, Welded, and Heavily Cold Worked Austenitic Stainless Steel Pipes
ASTM A320	Specification for Alloy Steel Bolting Material for Low-Temperature Service
ASTM A424	Specification for Steel, Sheet for Porcelain Enameling
ASTM A500	Specification for Cold-Formed Welded and Seamless Carbon Steel Structural Tubing in Rounds and Shapes
ASTM A536	Specification for Ductile Iron Castings
ASTM A563	Specification for Carbon and Alloy Steel Nuts
ASTM A569	Specification for Steel, Carbon (0.15 Maximum Percent), Hot Rolled Sheet and Strip Commercial Quality
ASTM A575	Specifications for Steel Bars, Carbon, Merchant Quality, M-Grades
ASTM A786	Specification for Rolled Steel Floor Plates
ASTM B98	Specification for Copper-Silicon Alloy Rod, Bar and Shapes
ASTM B210	Specification for Aluminum and Aluminum-Alloy Drawn Seamless Tubes
ASTM B221	Specification for Aluminum and Aluminum-Alloy Extruded Bars, Rods, Wire, Profiles and Tubes
ASTM B438	Specification for Bronze-Base Powder Metallurgy (PM) Bearings (Oil-Impregnated)

3. Trade Standards:

Specifications for Stainless Steels as published by the Specialty Steel Industry of North America, Washington, DC.

Porcelain Enamel Institute, Inc.

1.04 CONTRACTOR SUBMITTALS

A. Shop Drawings: Shop drawings shall be submitted in accordance with Section 01330.

B. Layout Drawings: Layout drawings for grating shall be submitted showing the direction of span, type and depth of grating, size and shape of grating panels, seat angle details, and details of grating hold down fasteners. Load and deflection tables shall be submitted for each style and depth of grating used.

C. Product List and Product Data Sheets: A product list shall be submitted with product data sheets of intended shop coats.

1.05 QUALITY ASSURANCE

A. Miscellaneous metals shall be fabricated and erected in accordance with the latest edition of the AISC "Specification for Structural Steel Buildings", and "Code of Standard Practice for Steel Buildings and Bridges", except wherever there is a discrepancy between the contract drawings and this specification, the contract drawings shall govern.

B. Aluminum work shall be fabricated and erected in conformance with applicable requirements of the CBC and referenced standards of the Aluminum Association.

C. Continuous Inspections:

1. The Contractor shall perform all welding and high strength bolting of structural steel assemblies under the continuous inspection of a certified Special Inspector approved by the Engineer. Should such fabrication be performed in the shop of a licensed Fabricator approved by the Engineer, only the field welding and high strength bolting of structural steel assemblies will be required to be performed under continuous inspection of the certified Special Inspector.
2. The Contractor shall notify the Engineer at least 24 hours in advance of the needed inspection.
3. The Contractor shall provide copies of inspection reports to the Engineer.

PART 2 - PRODUCTS

2.01 MATERIALS

A. Steel: Steel shall conform to the following requirements:

1. Shapes, Plates, Bars: ASTM A36
2. Pipe, Pipe Columns, Bollards: ASTM A53, Type E or S, Grade B Schedule 40 unless noted otherwise.
3. Tubes: ASTM A500, Grade C

B. Stainless Steel: Unless otherwise designated or approved, stainless steel alloy types shall conform to ASTM A276 and ASTM A312 as follows:

1. Stainless steel plates, pipe and structural shapes: Type 316.
2. Stainless steel bolts, nuts and washers: Type 316L where connecting or bearing on aluminum.

C. Aluminum: Aluminum structural shapes shall be new and conform to applicable Federal Specification for 6061-T6 alloy and temper, unless otherwise noted. Aluminum pipe shall conform to Schedule 40 or greater.

D. Cast Iron: Cast iron shall conform to ASTM A 48, except as otherwise noted.

E. Ductile Iron: Ductile Iron shall conform to ASTM A536, using Grade 60-40-18 or better, except as otherwise noted.

2.02 LADDERS

A. Ladders: Ladders which may be partially or wholly submerged, or which are located inside a hydraulic structure, shall be entirely of Type 316 stainless steel. All other ladders shall be of aluminum, or as otherwise indicated with skid resistant rungs.

B. Pop-Up Extensions: Ladders that do not have an exterior handhold shall be equipped with a pop-up extension. Pop-up extension device shall be manufactured of the same material and finish as the ladder with telescoping tubular section that locks automatically when fully extended. Upward and downward movement shall be controlled by stainless steel spring balancing mechanisms. Units shall be completely assembled with fasteners for securing to ladder rungs in accordance with the manufacturer's instructions.

C. Fall Prevention Systems: The fall prevention system shall be provided for ladders used to ascend heights exceeding 20 feet unless otherwise indicated on the drawings. All necessary components shall be provided, including 2 safety belts for each fall prevention installation to provide a complete and fully operational fall prevention system. A rail extension shall be provided for each installation. At all locations where fall prevention systems are installed, a safety chain with a snap hook shall be permanently attached to the top of the ladder. The chain shall be long enough to allow a person to connect the belt to the chain while standing on the landing adjacent to the ladder. The chain and snap hook shall have a minimum allowable capability of 500 pounds. Safety belts shall fit a waist range from 23 inches to 54 inches. Safety rails and associated accessories shall match the ladder material.

2.03 METAL GRATING

A. General: Metal grating shall be of the design, sizes and types indicated. All grating shall be completely banded at all edges and cutouts using materials and cross section equivalent to the bearing bars. Such banding shall be welded to each cut bearing bar. Where grating is supported on concrete, embedded support angles matching grating material shall be used on all sides, unless indicated otherwise. Such angles shall be mitered and welded at corners. Grating shall conform to the following requirements:

1. All pieces of grating shall be fastened in two locations to each support.
2. Where grating forms the landing at the top of a stairway, the edge of the grating, which forms the top riser, shall have an integral nonslip nosing, width equal to that of the stairway.
3. Where grating depth is not given, grating shall be provided which will be within allowable stress levels, and which shall not exceed a deflection of 1/4 inch or the span divided by 180, whichever is less. For standard duty plank and safety grating, the loading to be used for determining stresses and deflections shall be uniform live load of the adjacent floor or 125 psf, whichever is greater or a concentrated load of 1,000 pounds.

B. Grating Materials: Grating materials shall conform to the following requirements:

1. Grating material shall be aluminum, welded steel, galvanized after fabrications or stainless steel as specified on the contract drawings. Cross bars shall be welded in position.
2. No single piece of grating shall weigh more than 80 pounds, unless indicated otherwise.
3. Cross bars shall be welded into position so that there is no movement allowed of bearing and cross bars.

C. Grating Fastening Devices: For metal gratings, either welded or mechanical attachments shall be used except where otherwise noted.

2.04 IRON CASTINGS

A. General: Iron casting shall be uniform quality, free from blow holes, porosity, hard spots, shrinkage, distortion, or other defects. They shall be smooth and well cleaned by shotblasting.

B. Covers and Grates: Covers and grates shall fit together evenly, so that the cover fits flush with the surrounding surface and so that the cover does not rock or rattle when loading is applied. Round covers and frames shall have machined bearing surfaces.

C. Design Loads: Covers and grates with matching frames shall be designed to support the following loadings:

1. Where located within a structure, the design loading shall match that required for the adjacent floor area, or, if no loading is given, a minimum of 300 pounds per square foot, unless indicated otherwise.
2. Exterior covers and grates shall be designed for AASHTO H20 loading unless indicated otherwise.

D. Cover Details: Unless indicated otherwise, access manway covers shall be two-part street type removable covers. Larger cover shall be for a 48-inch diameter clear opening with 24-inch diameter cover offset from the center as indicated. Raised lettering shall be as indicated.

2.05 WELDING ELECTRODES

A. Steel Electrodes: Welding electrodes shall conform with AWS D1.1, except E7024 rods or electrodes shall be not be used.

B. Aluminum Electrodes: Contingent upon alloys being welded, only inert gas-shielded arc or resistant-welding process with filler alloys shall be used. No process requiring a welding flux shall be used.

C. Stainless Steel Electrodes: Welding of stainless steel with electrodes and techniques shall conform to AWS D1.6.

2.06 BOLTS

A. Bolt Requirements: Bolts shall comply with the following:

1. Nuts shall be capable of developing the full strength of the bolts. Threads shall be Coarse Thread Series conforming to the requirement of the American Standard for Screw Threads. Bolts and cap screws shall have hexagon heads and nuts shall be Heavy Hexagon Series (where applies) .
2. The length of all bolts shall be such that after joints are made up, each bolt shall extend through the entire nut, but in no case more than 1/2 inch beyond the nut.

B. Bolts Buried or Inside Tanks or Channels: Unless otherwise indicated, bolts, anchor bolts nuts and washers which are buried, submerged or below the top of the wall inside any hydraulic structure shall be of Type 316 stainless steel.

2.07 SHOP PRIME PAINT

A. Shop Prime Paint: To ensure compatibility with deferred field-applied paint or coating systems for ferrous metals other than stainless steel, ductile iron, galvanized steel, and cast iron, provide surface preparations and use shop prime paint product and manufacturer as painting, or protective coating system intended for field application. Shop prime shall not be provided on portions of work immediately adjacent to intended field welds, nor portions intended for embedment.

PART 3 - EXECUTION

3.01 FABRICATION AND INSTALLATION REQUIREMENTS

A. Fabrication and Erection: Except as otherwise indicated, the fabrication and erection of structural steel shall conform to the requirements of the AISC 303.

1. The work of this section shall be coordinated with related trades. Particular attention is required for items to be embedded in concrete work. All punching and drillings, indicated or required, shall be provided for the attachment of other work to that of this section.
2. Compliance with Safety Requirements. Dimensions required for the fabrication and installation of handrails, ladders, grating, plate, pipe hangers and etc. which are not shown on the drawings, shall conform to the Division of Occupational Health and Safety, General Industrial Safety Orders, State of California.

B. Protection: The Contractor shall provide and be responsible for protection and repair of adjacent surfaces and areas which may become damaged as a result of work in this section. Work performed hereunder shall be protected until completion and final acceptance of project by the Agency. The Contractor shall repair or replace all damaged or defective work to original specified condition at no additional cost to the Agency.

1. Finished floor surfaces and adjacent work shall be protected from damage. Concrete floors shall not be overloaded. Mobile equipment used in placing steel shall have pneumatic tires. Steel members shall not be placed directly on floors; pads of timber of other material shall be used for cushioning.

2. Where welding is done in proximity to glass or finished surfaces, such surfaces shall be protected from damage due to weld sparks, spatter or tramp metal.

C. Hatches: Install roof hatches in conformance with the manufacturer's recommendations.

D. Ladders: Ladders shall be fabricated of stainless steel (316 interior) or galvanized steel(exterior), with skid resistant rungs, as shown on the drawings. Ladder fabrication shall conform to requirements shown on the drawings and CAL/OSHA (and/or OSHA). Rails shall be extended where indicated. Units shall be secured with stainless steel anchoring devices. Fall prevention systems shall be provided on all ladders used to ascend heights exceeding 20 feet unless otherwise indicated on the drawings.

E. Pipe Rails and Railings: Pipe rails and railing shall be fabricated of stainless steel (316) or aluminum, unless otherwise indicated, completed with stanchions, toe plates, welded and bolted fittings, attachments and expansion/contraction provisions true to size configurations to meet or exceed the requirements of CAL/OSHA and as shown on the contract drawings. The Contractor shall grind and polish welds flush and smooth. Curves, where indicated or necessary, shall be bent on a radius of not less than 5 inches.

1. Safety chains shall be 1/2 inch link chain of same material as the railing with stainless steel harness-type snap to meet or exceed the requirements of CAL/OSHA.
2. Provisions shall be made to drain water from rail systems by drilling weep holes in concealed locations at the lowest possible elevations.

F. Pipe and Conduit Supports and Bracing: Supports and bracing for pipe and conduit shall be fabricated and installed as detailed on the contract drawings and in accordance with the requirements described in the City of Upland Standard Specifications in a fully coordinated manner with the work of other trades. Where shown or indicated, hot-dip galvanizing using materials specified in this section shall be hot-dip galvanized. Unless otherwise indicated, members shall be shop primed with a rust-inhibitive primer.

G. Embedded Channel and Angle Frames: Embedded steel channel and angle frames shall have continuously welded joints. Exposed welds shall be ground flush. Hot-dip galvanizing shall be provided after fabrication.

3.02 WELDING

A. Welding Steel: Welding shall be performed in accordance with the "Structural Welding Code- Steel", AWS, D1.1. Welders shall be qualified by tests in accordance with AWS B3.0.

B. Welding Aluminum: Welding shall be performed in conformance with AWS D1.2.

C. Welding Stainless Steel: Welding shall be performed in conformance with AWS D1.6

3.03 PAINTING

A. Painting: One or more shop coats of paint shall be given on all ferrous metals, except cast-iron, ductile iron, stainless steel and galvanized metals. Before priming, surfaces shall be thoroughly cleaned. Shop coats shall be allowed to dry before materials are loaded for delivery to the job site. After erection, all areas shall be painted where the shop coats have been rubbed off or omitted and all field bolting and welding areas as specified for shop priming.

B. Isolation of Dissimilar Metals: Aluminum members shall be isolated from contact with dissimilar metals, concrete and masonry to provide protection from electrolytic deterioration. The Contractor shall use non-absorptive tape or gaskets, a heavy brush coat of approved zinc chromate primer made with a synthetic resin vehicle or a heavy coat of approved alkali-resistant bituminous paint unless otherwise indicated on the contract drawings.

*** END OF SECTION ***

THIS PAGE INTENTIONALLY LEFT BLANK

SECTION 16000
GENERAL ELECTRICAL REQUIREMENTS

PART 1 - GENERAL

1.01 SUMMARY

A. Section Includes

1. Work and materials necessary for erecting a complete electrical and instrumentation system, tested and ready for continuous use.

B. Related Sections

1. Division 1 General Requirements
2. Division 2 Site Construction
3. Division 3 Concrete

1.02 DEFINITIONS

A. The term “Provide” means “Furnish and Install”.

1.03 SYSTEM DESCRIPTION

A. Design Requirements

1. If any contradictions, contrasts, or inconsistency appears, the most strict criteria noted and the collective requirements in any and all of the project documents shall apply.

1.04 SUBMITTALS

A. Intent

1. Organize work so that a complete electrical, instrumentation, and control system for the facility will be provided and will be supported by accurate shop drawings, record drawings, and O&M manuals.
2. Submit detailed shop drawings and data prepared and organized by the suppliers. Provide quantity of submittal sets in accordance with the requirements of Division 1.
3. Submittals shall be neatly grouped and organized by specification section number, and sub-section. Related information shall be highlighted, and the specific product shall be marked. All submittals shall be complete, and presented in one package. Incomplete submittals will be returned without review. If a portion of the project requires a fast track schedule, that portion only may be submitted earlier under a separate cover letter.

4. Work performed or equipment provided without engineer approved submittals is done at contractor's risk. Cost to re-work or re-supply will be born solely by the contractor.

B. Product Data

1. A complete list of the equipment and materials, including the manufacturer's name, product specification, descriptive data, technical literature, performance charts, catalog cuts, installation instructions, and spare part recommendations for each different item of the equipment specified. The above shall clearly show all the specified requirements as described in the Specifications including but not limited to specific UL and NEMA rating, technical capabilities, test result verifications, and acceptance letters.

2. Submittals not in compliance with the specifications must include the following information:

a. Reason for non-compliance or variance

b. Calculations and drawings for redesign of related components including detail drawings showing internal and assembly details, with installation instructions.

c. Proposed layout showing any modifications or exceptions to related work made necessary by this work, with calculations and drawings showing such modifications or exceptions.

C. Shop Drawings

1. Drawings containing complete wiring and schematic diagrams, control diagrams, and any other details required to demonstrate that the system has been coordinated and will operate as intended. Drawings shall show proposed layout, anchoring, support, and appurtenances of equipment, and equipment relationship to other parts of the work including clearances for maintenance and operations.

D. Utility Coordination

1. Submit copies of service entrance shop drawings to the utility, per utility submittal requirements, prior to submittal to the Engineer. Obtain written approval from the power utility company that the service entrance equipment is acceptable prior to release the order to the supplier for fabrication. Provide a copy of the approval letter from the utility with the submittal.

E. Closeout Submittals

1. Provide "Record Drawings" of the electrical, control, and instrumentation work to include:

a. Step-by-step procedure manuals for the installation, operation start-up, and maintenance of the equipment.

b. Installation, operating, troubleshooting, and maintenance and overhaul instructions in complete detail.

c. Possible breakdowns and repairs, and troubleshooting guides, as well as simplified wiring and control diagrams of the system installed. This shall provide the Owner with comprehensive information on all systems and components to enable operation, service, maintenance and repair.

d. Exploded or other detailed views of all equipment, devices, assemblies, and accessory components shall be included, together with complete parts lists and ordering instructions.

e. Provide an “As Built” set of Plans to Owner. Maintain at all times a marked up set of Plans showing the following information:

f. Actual installed circuit numbers, conduit sizes, cable tray routing, number of conductors, conductor sizes (larger than #12 AWG), and all other deviations from the design Plans.

g. Underground conduit, duct banks, and concealed items dimensioned on the Plans from permanent, visible, building features.

h. Actual motor size, starter size, and overload heater size, along with all other protective equipment for all 480 V and 4160 V motor circuits.

i. Conductor identification and panel schedules.

1.05 QUALITY ASSURANCE

A. Regulatory Requirements

1. Electrical work, including connection to electrical equipment integral with mechanical equipment, shall be performed in accordance with the latest published regulations, codes, and standards, of the following:

a. National Electrical Code (NEC)

b. California Electrical Code (CEC)

c. State and local codes

d. Institute of Electrical and Electronic Engineers (IEEE)

e. American National Standards Institute (ANSI)

f. American Society for Testing and Materials (ASTM)

g. Insulated Cable Engineers Association (ICEA)

h. National Electrical Manufacturers Association (NEMA) Standards

i. Federal Occupational Safety and Health Act (OSHA)

j. National Fire Protection Association (NFPA)

k. National Electrical Testing Association (NETA)

1.06 DELIVERY, STORAGE, AND HANDLING

A. Electrical panels, switchgear, motor control centers, and other electrical equipment, shall be shipped in sealed dust and moisture proof plastic sheet enclosures, and the seal maintained until units are installed. Said units shall be new and free of any dirt, dust, water, grease, rust, damaged parts or components.

1.07 PROJECT/SITE CONDITIONS

A. Verify site conditions before bidding or performing work.

1.08 SCHEDULING

A. Maintain a work schedule showing work to be performed, sequence of work, major milestones, and manpower loading. Coordinate schedule requirements with other trades. Provide adequate staff to perform the work in the time required by the schedule.

1.09 SYSTEM STARTUP

A. After installation and testing of all electrical and instrumentation equipment and systems, energize all equipment and leave ready for continuous operation.

PART 2 - PRODUCTS

2.01 MANUFACTURERS

A. Manufacturers and model numbers shown on Plans or listed in the specifications are intended to establish a minimum standard of quality and acceptability.

2.02 MATERIALS

A. Materials, equipment, and parts comprising any unit, or part thereof, specified or indicated on the Plans, shall be new and unused, of current manufacture, and of highest grade consistent with the state of the art. Damaged materials, equipment, and parts, are not considered to be new and unused, and will not be accepted.

2.03 MANUFACTURED UNITS

A. The fabricator of major components and manufactured units, such as distribution panel boards, switchgear, and motor control centers, shall also be the manufacturer of the major devices therein.

B. Electrical equipment provided with mechanical equipment assemblies shall be in compliance with this specification.

2.04 EQUIPMENT

A. Minimum sizes of equipment, and electrical devices, are indicated but it is not intended to show every offset and fitting, nor every structural or mechanical difficulty that will be encountered during the installation of the work.

B. Electrical equipment shall be capable of operating successfully at full-rated load, without failure, at an ambient air temperature of 60 degrees C, and specifically rated for the altitude indicated on the Plans. Provide air conditioning to meet the manufacturers' operating temperature for electrical equipment not rated for operation at that temperature.

C. When applicable, the material used in the performance of the electrical work shall be listed by the Underwriters' Laboratories, Inc. (UL) for the class of service for which they are intended.

D. Provide nameplates where indicated elsewhere in these specifications or on the Plans. Nameplates shall be black laminate with white letters and fastened to the various devices with round head stainless steel screws. Provide nameplates for each disconnecting means for service, feeder, branch, or equipment conductors, indicating its purpose.

2.05 FABRICATION

A. Shop Assembly

1. Equipment assemblies, such as Service Entrance Sections, Switchgear, Switchboards, Control and Distribution Panels, and other custom fabricated electrical enclosures shall bear a UL label as a complete assembly. The UL label on the individual components making up the assembly will not be considered sufficient to meet the present requirement. Whenever a generic UL label does not apply for

2. the assembly, a serialized UL label shall be affixed to the assembly, and the serial number shall be submitted with the assembly record shop drawings.

3. Custom fabricated electrical control panels, and enclosures, shall bear a UL label affixed by a local UL inspector.

PART 3 - EXECUTION

3.01 EXAMINATION

A. Site Verification of Conditions

1. Verify site conditions before bidding or performing work.

3.02 INSTALLATION

A. Coordinate work with other trades and with certified vendor shop drawing submittals.

B. Provide equipment in accordance with the manufacturers' requirements.

C. Identify each conductor as required by the Contract Documents.

D. Equipment Access:

1. Install equipment so it is readily accessible for operation and maintenance.

a. Equipment shall not be blocked or concealed.

b. Do not install electrical equipment such that it interferes with normal maintenance requirements of other equipment.

E. Equipment shall be installed plumb, square and true with the building construction, and shall be securely fastened.

F. Outdoor wall-mounted equipment, and indoor equipment mounted on earth, or water bearing walls, shall be provided with corrosion-resistant spacers to maintain ¼-inch separation between the equipment and the wall.

G. Arrange for the building in of equipment during structure construction. Where equipment cannot be built-in during construction, arrange for sleeves, box-outs, and other openings, as required to allow installation of equipment after structure construction is complete.

H. Verify that equipment will fit support layouts indicated.

I. Screen or seal all openings into outdoor equipment to prevent the entrance of rodents and insects.

J. Equipment fabricated from aluminum shall not be imbedded in earth or concrete.

K. Provide all necessary anchoring devices and supports.

1. Use supports as detailed on the Plans and as specified.

a. Supports and anchoring devices shall be rated and sized based on dimensions and weights verified from approved equipment submittals.

b. Hardware shall be stainless steel.

c. Do not cut, or weld to, building structural members.

d. Do not mount safety switches and external equipment to other equipment enclosures, unless enclosure mounting surface is properly braced to accept mounting of external equipment.

L. Verify exact rough-in location and dimensions for connection to electrical items furnished by others.

1. Obtain shop drawings from those furnishing the equipment.

a. Proceeding without proper information may require the Contractor to remove and replace work that does not meet the conditions imposed by the equipment supplied.

b. Provide sleeves wherever openings are required through new concrete or masonry members. Place sleeves accurately and coordinate locations with the Engineer.

c. Do not endanger the stability of any structural member by cutting, digging, chasing, or drilling and shall not, at any time, cut or alter the work without the Engineer's written consent.

d. Provide additional reinforcing if required.

e. Use proper tools and methods to cut, core drill, or make other penetrations.

f. Restore walls, ceilings, or floors to their original condition.

M. Provide concrete foundations or pads required for electrical equipment as indicated or specified.

1. Provide a 4-inch concrete housekeeping pad for floor mounted electrical equipment. Pour on top of the finished floor or slab. Refer to section 03200 – Concrete Reinforcement and the Structural Details for additional specifications and details.

N. Do not use equipment or arrangements of equipment that reduce required clearances or exceed the space allocation.

O. Work indicated on the Plans is approximately to scale, but actual dimensions and detailed Plans should be followed as closely as field conditions permit. Field verification of scale dimensions on Plans is governed by field conditions. Installation of systems and equipment is subject to clarification as indicated in reviewed shop drawings and field coordination.

P. Discrepancies indicated on different Plans, between Plans and actual field conditions, or between Plans and Contract Documents shall be promptly brought to the attention of the Engineer for clarification, prior to purchasing and installing equipment.

Q. Adjust the alignment of equipment and conduit to accommodate architectural changes or to avoid work of other trades.

R. Provide parts and pieces necessary to the installation of equipment, in accordance with the best practice of the trade, and in conformance with the requirements of these Contract Documents.

S. Items not specifically mentioned in these Contract Documents, or noted on the Plans, or indicated on reviewed shop drawings, but which are obviously necessary to make a complete working installation, shall be deemed to be included herein.

T. Layout and install electrical work prior to placing floors and walls. Provide sleeves and openings through floors and walls, required for installation of conduits. Sleeves shall be

rigidly supported and suitably packed, or sealed, to prevent ingress of wet concrete. Spacers shall be installed in order to prevent conduit movement. Dimensions indicated for electrical equipment and their installation are restrictive dimensions.

U. Provide inserts and hangers required to support conduits and other electrical equipment. Coordinate inserts and hangers with other trades. Replace inserts, hangers, sleeves, or other mounting hardware which are improperly placed.

V. Perform necessary saw cutting, core drilling, excavating, removal, shoring, backfilling, and other work required for the proper installation of conduits, whether inside, or outside of the buildings and structures. Use core drills to make circular holes.

W. ELECTRICAL UTILITY

1. Coordinate the electrical utility work with the electrical utility company. Note the additional submittal requirements under “SUBMITTALS – Utility Coordination” in Part 1 of this specification. Provide equipment and material required to bring electrical service to the service location in conformance with the electrical utility requirements. Provide the following for the electrical utility company's primary (from utility power line to the utility transformer) and secondary (from utility transformer to the service) electrical lines in accordance with the electrical utility company’s specifications and requirements:

   a. Conduits (verify quantity, sizes, and sum of bends)

   b. Trenching, backfill, and compacting (verify trench size(s), backfill material, and compaction percentage requirements, separation from other utility requirements)

   c. Concrete pad(s) (for pad mounted transformer(s))

   d. Cable protection along the vertical drop at the utility company’s pole (if pole mounted transformer(s))

   e. Other items required by the power utility company’s specifications

X. CORROSION PROTECTION

1. Wherever dissimilar metals, except conduit and conduit fittings, come in contact, the Contractor shall isolate these metals, as required, with neoprene washers, 9 mil polyethylene tape, or gaskets. Where fastening conduit, electro plated, or equivalent fasteners and stainless steel bolts shall be used.

3.03 REPAIR/RESTORATION

A. Repair damage caused by construction or demolition work to restore damaged areas to original condition.

B. Factory finishes damaged during shipping, or construction, shall be restored to original new condition. Rust shall be removed, and bare metal surfaces shall be primed and painted to match the original surrounding finish.

3.04 FIELD QUALITY CONTROL

A. Site Tests

1. The electrical work shall be free from improper grounds and from short circuits. Visually compare the conductor connections with connection diagrams. Perform individual circuit continuity checks using electrical circuit testers. Demonstrate proper operation of the energized electrical and mechanical devices. Correct any wiring deficiencies.

3.05 COORDINATION STUDY

A. A coordination study shall be provided for power distribution system protective devices unless specified elsewhere in the contract documents. Provide the Power System Coordination Study after the electrical equipment submittals have been reviewed and approved. The Coordination Study to be performed using ETAP, SKM or other approved power system analysis software.

B. The final deliverable shall be a certified report summarizing the coordination study.

C. As a minimum, the coordination study for the power distribution system shall include the following:

1. Time-current curves for each protective relay or fuse showing graphically that the settings will provide protection and selectivity within industry standards. Each curve shall be identified, and the protective device settings shall be specified.

2. Time-current curves for each device shall be positioned to provide maximum selectivity to minimize system disturbances during fault clearing. Where selectivity cannot be achieved, the ENGINEER shall be notified as to the cause.

3. Time-current curves and points for cable and equipment damage.

4. Circuit interrupting device operating and interrupting times.

5. Indicate maximum fault values on the graph.

6. Sketch of bus and breaker arrangement.

D. Contractor to field-adjust and set trip settings associated with protective devices per coordination study results.

E. Coordination Study to comply with the provisions and recommendations of IEEE 242-2001, Recommended Practice for Protection and Coordination of Industrial and Commercial Power Systems.

3.06 ADJUSTING

A. Calibrate and set all adjustable electrical equipment including circuit breakers, motor circuit protectors, overload relays. Align photo cells and lights to achieve desired effects.

3.07 CLEANING

A. Relays, starters, circuit breakers, switches, contacts, insulators, mechanisms, and buses shall be free of dust, dirt, oil, moisture, metal shavings, and other debris before testing and energizing equipment. Vacuum and wipe down inside and outside of electrical enclosures and control panels.

B. Interior and exterior surfaces shall be cleaned of oil, grease, dirt, plaster, concrete, etc.; surface scratches shall be repaired to match factory finishes. Panelboard and starter interior shall be vacuum-cleaned. Pullboxes interiors shall be free of all dirt and debris. Cleaning referred to herein describes the condition of equipment at the time of final inspection.

3.08 PROTECTION

A. Once equipment is installed, it shall be protected at all times with plastic sheet covers until the area is free of dirt, dust, paint spray, water, and other trades. Provide heat to eliminate condensation.

3.09 TESTING

A. Motor control equipment shall be wired and tested at the factory. All buses and wiring shall be given a dielectric test, in accordance with the latest NETA, IEEE, and NEMA Standards. Certified test reports shall be submitted to the OWNER's Representative before shipment, for record purposes. Testing shall include ground fault trips, energizing of all automatic and manual control circuits, and operation of starters.

3.10 SPARES

A. Vendor shall supply the following:

1. Six (6) spare fuses of each size less than 30 amperes used in the switchboard;

2. Three (3) spare indicator lamp bezels;

3. One (1) spare starter operating coil.

END OF SECTION

SECTION 16050
BASIC MATERIALS AND METHODS

PART 1 - GENERAL

1.01 DESCRIPTION

A. This section consists of general electrical materials and methods. Electrical materials that are a part of equipment specified under other sections shall meet the requirements of this section, unless part of larger factory-assembled equipment.

1.02 SUBMITTALS

A. Submit manufacturer's literature for raceways and fittings, boxes, wires and cables, wiring devices, nameplates, legend plates, labels, panelboards, and safety switches, service entrance equipment, control panels and any other electrical component utilized in this project.

1.03 QUALITY ASSURANCE

A. Refer to Section 16000.

1.04 SPARE PARTS

A. Provide spare components as indicated on drawings and elsewhere herein.

PART 2 - PRODUCTS

2.01 BASIC MATERIALS

A. Electrical safety switches, distribution and control equipment shall be rated for heavy duty service.

B. Wiring devices shall be specifications grade.

2.02 MISCELLANEOUS METAL AND MOUNTING CHANNELS

A. Metal Framing:

1. Unless otherwise shown, mounting channels shall be cold rolled from mild strip steel, 12-gauge, 1-5/8 inches by 1-5/8 inches, with a galvanized finish by Unistrut, Unistrut P-1000, as manufactured by Unistrut, or equal.

2. Screws, bolts, washers and nuts shall be stainless steel. Parts and brackets for assembly of channels shall be hot dipped galvanized.

B. Miscellaneous Metal: Galvanized steel, unless otherwise shown.

2.03 NAMEPLATES, LEGEND PLATES, AND LABELS

A. Nameplates: Laminated sheet plastic, approximately 1/16 inch-thick, with engraved white uniform block style letters on a black background, with adhesive backing and mounting screw holes. Cadmium plated or other corrosion resistant screws, minimum height of letters, 1/8-inch. Card holders are not acceptable.

B. Legend Plates: Type KN-3 standard legend plates, Square D, or equal.

C. Control Wire Markers: Heat shrink sleeve types, manufactured by W.H. Brady Company, or equal.

PART 3 - EXECUTION

3.01 BASIC MATERIALS

A. The completed installation shall conform to all applicable federal, state, and local code ordinances and regulations. Contractor shall obtain necessary permits and inspections required by the governing authorities. Work shall be done in a neat, workmanlike, finished and safe manner, according to the latest published N.E.C.A. standards of installation, under competent supervision. Install grounding as required by the National Electrical Code.

3.02 MISCELLANEOUS METAL AND MOUNTING CHANNELS

A. Install where electrical equipment is to be surface mounted to walls and where indicated on Drawings. Where two or more devices are to be installed side by side, support on metal framing, bolt together, and brace as required to form a rigid structure.

B. Clean cuts and welds. Coat unpainted surfaces with cold application zinc galvanizing. Coat cuts and welds on painted surfaces with zinc chromate primer and finish to match existing paint.

3.03 NAMEPLATES, LEGEND PLATES, AND LABELS

A. Nameplates: Identify panels, switchgear, regulators, load-break junction boxes, disconnect switches, and component enclosures. Fasten nameplates with stainless steel, self-tapping screws or rivets.

1. Panels: Identify panel number, voltage and amperage of panel bus.

2. Switchgear: Identify equipment, voltage, amperage and phase and number of wires.

3. Safety Switches and Relays: Identify equipment controlled and circuits from which they are fed.

B. Legend Plates: Install on selector switches, pushbuttons, pilot lights, starters, and other components.

C. Control Wire Markers: Install at both ends of each control wire interconnecting between such items as control panels, sensors, and control devices, and each end of control wires within control panels, and other such enclosures. Wiring markers shall correspond to control wire numbers on approved wiring diagrams.

END OF SECTION

THIS PAGE INTENTIONALLY LEFT BLANK

SECTION 16060

ELECTRICAL DEMOLITION

PART 1 - GENERAL

1.01 SCOPE OF WORK

A. Demolition of existing electrical shall be as indicated on the Drawings or as indicated elsewhere herein.

B. Demolition information shown on the Drawings is based on visual field examination and existing record drawings. The Contractor is responsible for verification of all items indicated or not. All items affected that are not indicated on the Drawings shall be brought to the Engineer's attention before demolition for direction.

C. The Contractor shall confine demolition work to the item specifically identified on the drawings. The Contractor shall be liable for any other damage he may inflict to the existing installations.

PART 2 - PRODUCTS

2.01 MATERIALS AND EQUIPMENT

A. Care shall be taken in demolition or removal of items as indicated on drawings as being returned to the Owner. The Contractor shall notify the Owner prior to removing existing equipment.

B. Whether indicated on the drawings or not, the Contractor shall provide patching material to fill voids where demolition has taken place. Patching materials shall match, as nearly as practical, the existing original structure material for each surface being patched.

PART 3 - EXECUTION

3.01 COORDINATION

A. The Contractor shall verify existing field conditions, measurement, circuitry etc. as indicated on Drawings prior to performing any demolition.

B. The Contractor shall verify that abandoned or demolished wiring and electrical equipment serve only abandoned facilities. If demolished or abandoned electrical is necessary for proper operation of facilities to remain in service, the Contractor shall immediately notify the Engineer for direction.

C. Demolition shall not be performed without coordinating with new construction to limit down time and ease of switchover. The Contractor must coordinate with the Engineer and the Owner prior to any demolition.

D. Prior to performing any demolition work, the Contractor shall provide temporary wiring and connections to maintain existing systems in service during construction. Temporary wiring shall conform to the National Electrical Code.

3.02 PERFORMANCE

A. General: The means and methods of performing electrical demolition and removal operations are the sole responsibility of the Contractor. However, equipment used, and methods of demolition and removal will be subject to approval of the Engineer.
   1. Remove exposed abandoned conduit systems, including abandoned conduit systems in false ceilings.
   2. Remove wiring in abandoned conduit systems to source of power supply, where indicated.
   3. In exposed through-structure conduit or foundation locations, cut conduits and foundation below the finished structure surfaces in order to perform adequate surface patching.
   4. Maintain electrical continuity of existing electrical installations which remain active. Modify installations as necessary to maintain continuity and provide adequate access as required by the National Electrical Code.
   5. Extend existing installations using materials and methods compatible with existing electrical installations, and as specified elsewhere herein.
   6. Disconnect and leave in place electrical devices and equipment serving utilization equipment that has been removed or demolished.

B. Cutting: Perform cutting work of existing structure materials by such methods as will prevent extensive damage beyond the immediate area of cutting.

C. Unless otherwise indicated existing, electrical equipment, conduit, wire, etc. indicated for demolition shall be removed and disposed of in a lawful manner, off Site.

D. The Contractor shall move existing electrical equipment required to be returned to the Owner, to locations as directed by the Owner. Care shall be taken to ensure existing electrical equipment being returned to the Owner does not become damaged. The Contractor shall provide a means for storing and or stacking of the returned equipment prior to moving to final location, if necessary.

E. Items Abandoned in Place:
   1. All items to be abandoned in place shall be de-energized.
   2. Connections shown or otherwise indicated as disconnected shall be removed with lugs left in place and with all conduit and cable openings properly plugged and sealed as required by the NEC.
   3. Any abandoned in-place equipment damaged by Contractor shall be repaired and restored to its original condition.

*** END OF SECTION ***

SECTION 16111
CONDUITS

PART 1 - GENERAL

1.01 SCOPE OF WORK

A. Furnish and install conduits as required, and as shown on the Drawings. Materials employed shall be as shown on the Drawings.

1.02 SUBMITTALS

A. Submit product literature including manufacturer part number, model number, material, size, and specifications. Material shall not be installed until the Engineer has reviewed the submittal data.

B. Shop Drawings shall be submitted for review and acceptance showing routing, conduit size, and number and size of wires in each conduit before installation of conduit and any related work.

C. Proposed routing of conduits buried under floor slabs-on-grade.

D. Identify conduit by tag number of equipment served or by circuit schedule number.

E. Proposed routing and details of construction including conduit and rebar embedded in floor slabs, columns, etc. Identify conduit by tag number of equipment served or by circuit schedule number.

F. Proposed location and details of construction for openings in slabs and walls for raceway runs.

G. Refer to Section 16000 for further submittal requirements.

1.03 REFERENCES

A. American National Standards Institute (ANSI): C80.1, Rigid Steel Conduit - Zinc-Coated.

B. National Electric Manufacturers Association (NEMA): RN-1, Polyvinyl-Chloride (PVC) Externally Coated Galvanized Rigid Steel Conduit.

C. Underwriters Laboratories Inc. (UL) :

1. 1, Flexible Metal Conduit.

2. 6, Rigid Metal Conduit.

3. 360, Liquid-Tight Flexible Steel Conduit.

4. 467, Grounding and Bonding Equipment.

5. 514, Nonmetallic Outlet Boxes, Flush-Device Boxes and Covers.

6. 651, Schedule 40 and 80 Rigid PVC Conduit.

7. 870, Wireways, Auxiliary Gutters, and Associated Fittings.

8. 884, Underfloor Raceways and Fittings.

9. 886, Outlet Boxes and Fittings for Use in Hazardous (Classified) Locations.

PART 2 - PRODUCTS

2.01 RACEWAYS

A. Exposed conduit in an unclassified or hazardous area shall be galvanized rigid steel (GRS) unless specifically indicated otherwise on the Drawings. Conduits in corrosive areas (i.e. chemical rooms) shall be PVC coated GRS unless otherwise indicated. Underground and/or concrete encased conduits shall be PVC coated GRS, unless otherwise indicated. All wiring, except as otherwise noted, shall be in conduit. Conduit size shall not be less than the National Electrical Code (NEC) size required for the conductors therein and shall not be smaller than 3/4-inch. No underground conduit shall be less than one inch.

B. Condulet type fittings shall be Crouse-Hinds, Appleton, or equal with wedge nut covers. All condulets located outdoors or in wet locations shall be weathertight.

C. In unclassified areas, flexible conduit shall be grounding type, weatherproof, corrosion resistant, and watertight.

D. Conduit fittings shall comply with the same requirements as the raceway with which they will be used. Fittings for use with rigid steel conduit shall be cast malleable iron metal.

E. Conduit fittings larger than 1-inch, shall be “mogul size.” Covers of fittings shall be closed with gaskets. Surface mounted cast fittings, housing wiring devices in outdoor and damp locations, shall have mounting lugs.

F. Couplings, connectors, and fittings shall be standard types specifically designed and manufactured for the purpose. They shall be installed to provide a firm mechanical assembly and electrical conductivity throughout.

G. Expansion fittings shall be OZ type AX with jumper for exposed locations and type DX at structural expansion joints, Spring City, or equal. Conduits shall have expansion fittings in accordance with NEC.

H. The conduits and fittings shall be supported per NEC requirements as a minimum.

I. Insulated bushings shall be an approved molded plastic or malleable iron with insulating ring

J. Insulated grounding bushings shall be an approved malleable iron with insulating ring and with ground lug.

K. Approved Erickson couplings shall be used at all points of union between ends of rigid conduits which cannot be coupled; running threads and threadless couplings shall not be used.

L. All rigid steel sweeps and conduits shall be full weight, mild steel, hot-dip galvanized and bichromate-coated inside and outside after galvanizing.

M. All steel conduit installed in direct contact with earth, encased in concrete (or reinforced concrete), and in concrete slabs on grade shall be corrosion protected using PVC coated rigid steel.

N. Corrosion-protected conduit shall be left exposed until inspected and approved by the ENGINEER

O. Approved liquid-tight fittings are described in the District's Approved Materials List

P. Hubs, for threaded attachment of steel conduit to enclosures, are described in the District's Approved Materials List.

2.02 GALVANIZED RIGID STEEL (GRS)

A. Conduit and couplings shall be hot-dipped galvanized with zinc coated threads and outer coating of zinc bichromate, in accordance with ANSI C80.1 standards, as manufactured by Jones & Laughlin Steel Corporation, Allied Tube & Conduit Corporation, Triangle PWC, or equal.

B. Steel conduit shall not be buried in earth without concrete encasement and additional corrosion protection. A half-lapped rapping of 20 mil PVC based corrosion protection tape shall be used.

2.03 PVC COATED GALVANIZED RIGID STEEL (PVC-GRS)

A. PVC coated GRS conduit shall be installed where shown on the Drawings or elsewhere specified above and shall conform to Federal Specification WW-C-581d, NEMA RN-1, ANSI C80.1 standards, and to Underwriter's Laboratories specifications. All underground conduit, concrete encased conduit, conduit installed corrosive areas shall be PVC coated GRS, unless specifically noted otherwise.

B. The zinc surface of the conduit shall remain intact and undisturbed on both the inside and the outside of the conduit throughout the preparation and application processing. A Polyvinyl Chloride (PVC) coating shall be bonded to the galvanized outer surface of the conduit. The bond between the PVC coating and the conduit surface shall be greater than the tensile strength of the plastic. The thickness of the PVC coating shall be a minimum of 0.040-inch (40 mil).

C. A loose PVC jacketed coupling shall be furnished with each length of conduit. A PVC coating shall be bonded to the outer surface of the coupling and a PVC sleeve equal to the outside diameter of the uncoated conduit shall extend beyond both ends of the coupling approximately one pipe diameter or 1-1/2 inches, whichever is smaller. The wall thickness of the coating on the coupling and the sleeve shall be a minimum of 0.040-inch (40 mil).

D. A PVC coating shall be bonded to the inner and outer surface of all conduit bodies and fittings and a PVC sleeve shall extend from all hubs. The wall thickness of the coating on conduit bodies and fittings and the sleeve walls shall be identical to those on couplings in length and thickness. The covers on all conduit bodies shall be coated on both sides and shall be designed to be completely interchangeable. The inside of conduit bodies shall remain undisturbed in the processing.

E. Type 304 stainless steel screws shall be furnished and used to attach the cover to the conduit body. All coated material shall be installed and patched according to the manufacturer's recommended installation and patching instructions.

F. Conduit straps shall be PVC coated or stainless steel.

G. PVC coated conduit and fittings shall be as manufactured by Kor Kap Corporation, Occidental Coating Company, Rob-Roy, or equal.

H. PVC coated flexible conduits shall be liquid and vaportight and manufactured in accordance with UL 360 standards.

2.04 RIGID NONMETALLIC - PVC

A. Where specifically indicated on the Drawings, or elsewhere specified, conduit may be high density Schedule 40, 90 degrees C, heavy-duty PVC. The conduit shall be manufactured from virgin polyvinyl chloride compound which meets ASTM D1784, NEMA TC-2, ANSI C33.91, and UL 651 standards. Smoke emissions shall be limited to less than 6 grams per 100 grams of material tested.

B. Where conduit concrete encasement is indicated on the Drawings, conduit supports shall be installed at five foot intervals. PVC conduit shall be manufactured by Carlon, Triangle Conduit & Cable, or equal.

2.05 LIQUIDTIGHT FLEXIBLE METAL CONDUIT

A. Liquidtight flexible metal conduit shall be liquid and vaportight, oil and ultraviolet ray resistant and manufactured in accordance with UL 360 standards. Liquidtight flexible metal conduit shall be formed of a continuous, spiral wound, galvanized steel core with an extruded PVC jacket. The PVC jacket shall be rated for high ambient heat applications, 90 degrees Celsius.

B. For corrosive locations, liquidtight flexible metal conduit shall be formed of a continuous, spiral wound, aluminum core with an extruded PVC jacket. The PVC jacket shall be impervious to corrosive liquids and vapors.

C. An external bonding conductor shall be required for flexible conduit connections containing circuits rated at 60 amps or greater and for sizes 1 1/2 " or larger. Flexible conduit and connectors for 1 1/4" and smaller shall be listed for grounding.

D. Connectors for liquidtight flexible conduit shall be galvanized, furnished with a sealing ring and locknut, and suitable for wet locations.

PART 3 - EXECUTION

3.01 INSTALLATION

A. Conduit runs are schematic only, and shall be modified as required to suit field conditions, subject to review and acceptance by the Engineer.

B. Conduit shall run continuously between outlets and shall be provided with junction boxes where connections are made. Couplings, connectors, and fittings shall be acceptable types designed and manufactured for the purpose, and shall provide a firm mechanical assembly, and electrical conductivity throughout.

C. Conduit runs shall be straight and true. Elbows, offsets, and bends shall be uniform and symmetrical and shall only be accomplished with tools designed for the purpose intended. Changes in direction shall be made with long radius bends, or with fittings of the condulet type.

D. Conduit runs in buildings and structures shall be exposed except as specifically noted, or accepted by the Engineer.

E. Conduit runs shall not interfere with the proper and safe operation of equipment, and shall not block or interfere with ingress or egress, including equipment removal hatches.

F. Exposed conduits shall be securely fastened with clamps, or straps, intended for conduit use. Conduits shall be supported by two-hole straps where concealed and one-hole cast clamps elsewhere at intervals specified by the NEC. All exposed conduit shall be run on the walls and ceiling only and shall be perpendicular or parallel to the planes of the walls or ceiling. No diagonal runs will be permitted. Flexible conduit shall be used only for short lengths required to facilitate connections between rigid conduit to motors from junction boxes, or control equipment.

G. Conduit runs on water-bearing walls shall be supported one inch away from the wall on an accepted channel. When channel galvanizing, or other coating, is cut or otherwise damaged, it shall be field coated to original condition. No conduit shall be run in water-bearing walls, unless specifically designated otherwise.

H. Conduit shall be thoroughly reamed to remove burrs. IMC or GRS shall be reamed during the threading process, and Rigid Nonmetallic PVC shall be reamed before applying fittings. A zinc rich cold galvanizing shall be used to restore corrosion protection on field cut threads. Bushings and lock nuts or hubs shall be used at conduit termination's. The total number of bends in any run between pull points shall not exceed 180 degrees unless specified otherwise, or through mutual agreement; otherwise, a suitable pullbox shall be provided (Conduit access fittings shall not be used). Junction boxes and pull boxes shall be installed at points acceptable to the Engineer. Conduit ends shall be plugged to prevent the entrance of moisture or debris during construction. All spare conduits not terminated in pullboxes shall be plugged or adequately capped and shall contain a suitable pull rope.

I. Joints shall be set up tight. Hangers and fastenings shall be secure, and of a type appropriate in design, and dimensions, for the particular application.

J. Conduit runs shall be electrically and mechanically completed and be cleaned and internally sized (obstruction tested) so that no foreign objects, or obstructions remain in the conduit prior to pulling in conductors.

K. After installation of complete conduit runs 2 inches and larger, conduits shall be snaked with a conduit cleaner equipped with a cylindrical mandrel of a diameter not less than 85 percent of the nominal diameter of the conduit. Conduits through which the mandrel will not pass shall not be used.

L. Expansion fittings shall be installed across all expansion joints and at other locations where necessary to compensate for thermal expansion and contraction.

M. Provide trenching, backfill, and compaction for conduits installed underground.

N. Unless approved in advance by the Engineer, all conduits which transition from underground to aboveground will utilize galvanized rigid steel conduit for the bend from horizontal to vertical and for the extension above the ground. Factory 90 degree GRS bends shall be used. GRS bends and conduits shall be half lapped with 20 mil PVC tape in non-corrosive areas and shall be PVC coated rigid steel in corrosive areas. Tape wrapping shall extend a minimum 6 inches above top of slab or above finished grade.

O. Conduit shall be terminated with flush couplings at exposed concrete surfaces. Conduit stubbed up for floor-standing equipment shall be placed in strict accordance with approved shop drawings

P. Metallic raceway installed below-grade or in wet locations and in concrete shall be made up with an approved conductive waterproof compound applied to the threaded joints.

Q. Flexible liquid-tight conduit shall be used for the connection of equipment such as motors, transformers, and valves subtract to vibration or movement during normal operation or servicing. Flexible conduit may be used in lengths as required for the connection of recessed lighting fixtures; otherwise the maximum length of flexible conduit shall be 36-inches. Flex conduits shall be by a manufacturer, as shown in the District's Approved Materials List.

R. Liquid tight flexible metallic conduit 1-1/2 inch and larger shall be provided with grounding style bushings and shall have an external ground wire sized and installed in accordance with the NEC.

END OF SECTION

SECTION 16123
600 VOLT CLASS CABLE

PART 1 - GENERAL

1.01 SCOPE OF WORK

A. This section covers the furnishing and installation of 600 Volt Class cables and conductors, terminations and splicing, and pulling lubricants.

1.02 SUBMITTALS

A. Products shall be submitted in accordance with Section 16000, and elsewhere in the Contract Documents, prior to installation.

1.03 REFERENCES

A. Insulated Cable Engineers Association/National Electrical Manufacturers Association (ICEA/NEMA):

1. S-68-516/WC 8, ethylene-propylene rubber-insulated wire and cable for the transmission and distribution of electrical energy.

2. S-61-402/WC 5, thermoplastic-insulated wire and cable for the transmission and distribution of electrical energy.

3. S-66-524/WC 7, cross-linked thermosetting-polyethylene-insulated wire and cable for transmission and distribution of electrical energy.

4. S-76-474 neutral-supported power cable assemblies with weather-resistant extruded insulation, 600 Volts

B. Underwriters Laboratory, Inc.

1. 44, rubber insulated wires and cables.

2. 83, thermoplastic-insulated wires and cables.

3. 486A, wire connectors and soldering lugs for use with copper conductors.

4. 486B, wire connectors for use with aluminum conductors.

5. 510, insulating tape.

C. National Electric Code

1. California Electric Code.

PART 2 - PRODUCTS

2.01 ACCEPTED MANUFACTURERS

A. Conductors and Multi Conductor Cables (MCC), subject to compliance with Contract Documents, only manufacturers on the District's Approved Material List are acceptable:

2.02 CONDUCTORS

A. All wire colors, sizes, and insulation shall meet the requirements of the RCWD Technical Provisions - Division 6 and Division 18, included in Appendix A of section 16161.

B. All conductors, including ground conductors, shall be copper. The insulation shall bear the manufacturer's trademark, type and voltage rating, conductor size, and be rated for a minimum of 90 degrees C.

C. Wire sizes shall be American Wire Gauge (AWG) sizes with Class B stranded construction. Wires sized #2 and smaller shall be factory color coded with a separate color for each phase and neutral, which shall be used consistently throughout the system. Larger cables shall be coded by the use of colored tape. Conductors sized #4 and larger shall be XHHW-2, rated for 90 degrees C. All circuit conductors, #6 or smaller shall be "THHN-THWN-2" stranded copper. All other conductors shall be "XHHW-2" stranded copper.

D. Individual or multiple conductor cables for power, control, and alarm circuits of 480 volts or less shall be insulated for not less than 600 volts and shall have insulation type as indicated on the Drawings and/or these specifications. "THHN/THWN-2" shall conform to ICEA S-61-402/NEMA WC 5 and UL 83 and "XHHW-2" shall conform to ICEA S-66-524/NEMA WC 7 and UL 44. Where wire size is not indicated, they shall be of the size required by the NEC, except that no power wires external to panels and motor control centers shall be less than #12, unless specifically noted on the Drawings. Panel control wiring shall not be less than #14, unless specifically noted on the Drawings.

E. Overhead service-type multiple conductor cables for power circuits of 480 volts or less shall be insulated for not less than 600 volts and shall have insulation type as indicated on the Drawings and/or these specifications. "PE" black thermoplastic polyethylene, "HDPE" high density black thermoplastic polyethylene and "XLPE" low density black thermoplastic polyethylene shall conform to ICEA S-76-474. Wires shall be new and shall be hard drawn copper with not less than 97 percent conductivity. Multiple conductor cables shall consist of one, two or three phase insulated conductor (Second conductor 1 ridge, third conductor 2 ridges for phase ID) twisted around a bare neutral "messenger" conductor. Where wire size is not indicated, they shall be of the size required by the NEC, except that no power wires external to panels and motor control centers shall be less than #12, unless specifically noted on the Drawings.

F. All control wiring internal to a control panel shall be stranded, coated copper machine tool grade UL, Type MTW and not be less than #16, unless specifically

noted on the Drawings. Conductors #14 and larger shall have 3/64-inch thick insulation. Wire shall be rated at 600volts at 60 degree C in wet locations.

G. Motor feeder conductors shall have type “RHW-USE” insulation, 600-volt. All other wire shall be 600-volt, type “THHN-THWN-2”. All wire shall be stranded, not solid.

H. All wiring shall be as indicated on the Drawings. Wires shall be new and shall be soft drawn copper with not less than 97 percent conductivity. The wire and cable shall have size, grade of insulation, voltage, and manufacturer's name permanently marked on the outer covering at not more than 2-foot intervals. All wires shall conform to the latest Standards of the ASTM, and ICEA, and shall be tested for their full length by these Standards. Insulation thickness shall be not less than that specified by the National Electrical Code.

I. Power conductors for lighting and receptacles only may utilize “THNN” solid conductors.

2.03 TERMINATIONS AND SPLICES

A. Cable shall be rated 600 volts. Other parts of cable systems such as splices and terminations shall be rated at not less than 600 volts. Splicing shall join conductors mechanically and electrically to provide a complete circuit prior to installation of insulation.

B. Splices in wires No. 10 AWG and smaller shall be made with an insulated, solderless, pressure type connector, Type I, Class 1, Grade B, Style G, or Type II, Class 1 of FS W-S-610 and conforming to the applicable requirements of UL 486A.

C. Splices in wires No. 8 AWG and larger shall be made with non-insulated, solderless, pressure type connector, Type II, Class 2 of FS W-S-610, conforming to the applicable requirements of UL 486A and UL 486B. They shall then be covered with an insulation and jacket material equivalent to the conductor insulation and jacket.

D. Insulated conductor splices below grade or in wet locations shall be sealed type conforming to ANSI C119.1 or shall be waterproofed by a sealant-filled, thick wall, heat shrinkable, thermosetting tubing or by pouring a thermosetting resin into a mold that surrounds the joined conductors.

E. Bare conductor splices in wet locations or below grade shall be of the exothermic type.

F. Control conductors shall be spliced or terminated only at the locations indicated on the drawings and only on terminal strips or terminal lugs of vendor furnished equipment. For the purposed of this port of the specification, “control conductors” are defined as conductors operating at 120-volts or less in circuits that indicate equipment status or that control the electric energy delivered to a power-consuming device.

G. All 120/240-volt and 480-volt branch circuit conductors may be spliced in suitable fittings at locations approved by the ENGINEER. Motor feeder conductors shall be spliced only at motor terminal boxes and motor starter terminal lugs.

H. 600-volt branch circuit conductors, #8 and larger shall be spliced or terminated with approved compression connectors. These splices shall be insulated with two (2) layers of Scotch tape or equivalent by Plymouth, or equal. Conductors smaller than #8 may be spliced with approved pre-insulated springs connectors. Conductors of these types may be terminated on termination lugs or screws normally furnished with vendor-furnished equipment.

I. Control conductors shall be terminated under terminal screws with approved pre-insulated fork tongue lugs.

J. Control devices, such as solenoid operated valves, that are normally supplied with conductor pigtails, shall be terminated, as described for control conductors.

K. Splices in 600-volt wire and cable which are not pre-insulated shall be taped with two (2) layers, each layer half-lapped, of Scotch No. 33 tape, or equal.

2.04 PULLING LUBRICANT

A. All cables shall be properly coated with UL-approved pulling compounds containing no mineral oil such as ClearGluide, Aqua Gel, Polywater, or equal before being pulled into conduits so as to prevent mechanical damage to the cables during installation. “Yellow 77” is not acceptable.

B. Other lubricants to be substituted must be accompanied by a statement from the cable manufacturer as to its acceptable use with the cable being installed.

2.05 IDENTIFICATION

A. All wire colors, sizes, and insulation shall meet the requirements of the RCWD Technical Provisions - Division 18, included in Appendix A of section 16161.

B. All conductors shall be numbered with "tube sleeve" type tags with heat impressed letters and numbers.

C. Color code all wiring as follows:

1. Lighting and power wiring:

CONDUCTOR	**120/208 VAC**	**480VAC**	**24V DC**	**120 VAC Control/ Power**
Phase 1	Black	Brown	Blue	Red
Phase 2	Red	Orange	(-) Blue w/ white stripe	
Phase 3	Blue	Yellow		
Neutrals	White	White or Gray		White

2. Color code ends of feeder phase conductors only.

PART 3 - EXECUTION

3.01 INSTALLATION

A. Conductors shall not be pulled into the raceway until:

1. Raceway system has been inspected and approved by the OWNER's representative;

2. Plastering and concrete have been completed in affected areas;

3. Raceway system has been freed of moisture and debris.

B. Install all cables complete with proper terminations at both ends. Check and correct for proper phase sequence and proper motor rotation. Check for proper control connection. All electrically common wires shall have the identical wire tag number at all points and ends.

C. The pulling tension and side-wall pressures, as recommended by the cable manufacturer, shall not be exceeded.

D. When pulling by mechanical means, use a dynamometer. Cut off section subject to mechanical means of gripping and pulling.

E. Conductors #1 and smaller shall be hand-pulled; larger conductors may be pulled using power winches.

F. Wire in panels, cabinets, and gutters shall be neatly grouped, using nylon tie straps and fanned out to terminals..

G. As far as practical, all circuits shall be continuous from origin to termination without splices in intermediate pull boxes. Sufficient slack shall be left at the termination to make proper connections. In no case shall a splice be pulled into the conduit. Conductor splicing shall not be permitted without the Engineer's approval.

H. Install all cables in conduit.

I. Each feeder and branch circuit shall be installed in its own individual conduit unless combining feeder and branch circuits is permitted as defined in the following:

1. As specifically indicated on the Drawings.

2. For lighting, multiple branch circuits may be installed in a conduit as allowed by the NEC and with the wire ampacity derated in accordance with the requirements of the NEC. Conduit fill shall not exceed the limits established by the NEC.

3. When field conditions dictate and written permission is obtained from the Engineer.

J. Feeder and branch circuits shall be isolated from each other and from all instrumentation and control circuits.

K. Control circuits shall be isolated from all other feeder, branch and instrumentation circuits, except as noted below.

1. 12 V DC, 24 V DC and 48 V DC control circuits may be combined in common conduit.

2. 125 V DC control circuits shall be isolated from all other DC and AC control circuits.

3. 120 V AC control circuits shall be isolated from all DC control circuits.

L. Make splices only at pull or junction boxes.

1. Crimp or indented-type connectors are not allowed, except for control circuits landed on terminal strips.

3.02 TESTING

A. In accordance with Specification 16920 – ELECTRICAL ACCEPTANCE TESTING

B. Cable assembly and testing shall comply with applicable requirements of IPCEA Publication No. S-66-524, S-61-402, S-18-81, and other relevant IPCEA publications. Factory test results shall be submitted similar to shop drawings, prior to shipment of cable. Testing shall include a field testing of insulation resistance and a DC high potential test; such testing shall be accomplished by a test organization sponsored by any of the cable manufacturers stipulated in the District's Approved Material List.

END OF SECTION

SECTION 16124
INSTRUMENTATION CLASS CABLE

PART 1 - GENERAL

1.01 SCOPE OF WORK

A. This section covers cable use for process signal and controls.

1.02 SUBMITTALS

A. Products shall be submitted in accordance with Section 16000, and elsewhere in the Contract Documents, prior to installation.

1.03 REFERENCES

A. Insulated Cable Engineers Association/National Electrical Manufacturers Association (ICEA/NEMA):

1. S-68-516/WC 8, ethylene-propylene rubber-insulated wire and cable for the transmission and distribution of electrical energy.

2. S-61-402/WC 5, thermoplastic-insulated wire and cable for the transmission and distribution of electrical energy.

3. S-66-524/WC 7, cross-linked thermosetting-polyethylene-insulated wire and cable for transmission and distribution of electrical energy.

4. S-76-474 neutral-supported power cable assemblies with weather-resistant extruded insulation, 600 Volts

B. Underwriters Laboratory, Inc.

1. 44, rubber insulated wires and cables.

2. 83, thermoplastic-insulated wires and cables.

3. 486A, wire connectors and soldering lugs for use with copper conductors.

4. 486B, wire connectors for use with aluminum conductors.

5. 510, insulating tape.

C. National Electric Code

1. California Electric Code.

PART 2 - PRODUCTS

2.01 ACCEPTABLE MANUFACTURERS

A. Subject to compliance with Contract Documents, the instrumentation cable shall be as manufactured by Belden, Okonite, or equal.

2.02 INSTRUMENTATION CABLE

A. Instrument cable shall be Type TC, and have the number of individually shielded twisted pairs indicated on the Drawings and shall be insulated for not less than 600 volts. Unless otherwise indicated, conductor size shall be No. 18 AWG minimum. Shielded, grounded instrumentation cable shall be used for all analog signals.

B. The jacket shall be flame retardant with 90 degrees C temperature rating. The cable shield shall be a minimum of 2.3 mil aluminum or copper tape overlapped to provide 100 percent coverage and a tinned copper drain wire.

C. The conductors shall be bare soft annealed copper, Class B, 7 strand minimum concentric lay with 15 mils nominal thickness, nylon jacket, 4 mil nominal thickness, 90 degrees C temperature rating. One conductor within each pair shall be numerically identified.

D. Pairs shall be assembled with a nominal 2-inch lay and shall then be group shielded with a minimum of 1.3 mil aluminum or copper tape overlapped to provide 100 percent coverage. All group shields shall be completely isolated from each other.

PART 3 - EXECUTION

3.01 INSTALLATION

A. Feeder and branch circuits shall be isolated from each other, and from instrumentation and control circuits. Instrumentation cables shall be installed in separate raceways from other cables and wiring. This includes portions running through manholes. Instrumentation cable shall be continuous between instruments or between field devices and instrument enclosures. There shall be no intermediate splices or terminal boards, unless otherwise shown on the Drawings.

B. Maintain electrical continuity of the shield when splicing twisted shielded pair conductors. Drain wires shall be terminated inside enclosures at grounded terminal blocks. Only one end of each instrument loop cable drain wire shall be grounded. Ground drain wire of shielded conductors at one end only.

C. Terminate instrumentation and control wiring, including spare wires, at control panels and motor control centers on terminal boards mounted inside the equipment.

1. Contractor shall supply terminal boards as required.

2. Do not field wire directly to devices.

END OF SECTION

SECTION 16130
OUTLET, PULL, AND JUNCTION BOXES

PART 1 - GENERAL

1.01 SUMMARY

A. Section Includes:

1. Outlet, pull and junction boxes.

B. Related Sections include but are not necessarily limited to:

1. Division 1 - General Requirements.

2. Section 16000 - Electrical: Basic Requirements.

3. Section 16111 - Conduits.

4. Section 16170 - Grounding.

1.02 QUALITY ASSURANCE

A. Referenced Standards:

1. Refer to Section 16000.

1.03 SUBMITTALS

A. Shop Drawings:

1. Refer to the Contract Documents and Section 16000.

1.04 DELIVERY, STORAGE, AND HANDLING

A. See Section 16000.

PART 2 - PRODUCTS

2.01 ACCEPTABLE MANUFACTURERS

A. Subject to compliance with the Contract Documents, the following manufacturers are acceptable:

1. Galvanized steel boxes:

a. Appleton Electric Co.

b. Steel City.

c. Raco.

2. Sheet metal boxes for non-classified areas:

a. Hoffman Engineering Co.

3. Corrosion-resistant boxes:

a. Hoffman Engineering Co.

b. Crouse-Hinds.

4. Raintight and watertight boxes:

a. Appleton Electric Co.

b. Crouse-Hinds.

5. Terminal boxes:

a. Hoffman Engineering Co.

6. Boxes in earth:

a. Carlon Electric Products.

7. Exposed switch and receptacle boxes:

a. Appleton Electric Co.

b. Crouse-Hinds.

c. Killark.

B. Submit requests for substitution in accordance with Specification Section 01330.

2.02 MATERIALS

A. Pull and Junction Boxes for Offices and other Dry Architecturally Finished Areas:

1. Material: 14 GA, galvanized steel.

2. Concentric knockouts on all four sides.

3. Flat cover fastened with screws.

4. NEMA 1 classification.

5. UL listed.

B. Pull and Junction Boxes for General Use Unclassified Areas Suitable for NEMA 12 Enclosures:

1. Material: 14 GA galvanized steel with seams continuously welded, ground smooth and no knockouts.

2. Zinc rich coating on all seams.

3. Stainless steel captivated cover screws threaded into sealed wells.

4. Flat door with oil resistant gasket.

5. NEMA 12 classification.

6. UL listed.

C. Pull and Junction Boxes for Wet Areas:

1. Material: 14 GA steel with polyester powder coating inside and out over phosphatized surfaces.

2. Seams continuously welded, ground smooth, no knockouts.

3. Stainless steel clamps on four sides.

4. Flat cover with oil resistant gasket.

5. NEMA 4 classification.

6. Type FS

7. UL listed.

D. Large Pull and Junction Boxes (100 CU IN and larger):

1. Located in offices and other dry architecturally finished areas where EMT is utilized:

a. NEMA 1 gasketed without knockouts.

2. Located in general use areas:

a. NEMA 12 construction:

1) Welded steel.

2) Furnished with gray enamel inside and out over phosphatized surfaces.

3. Located in wet and corrosive areas:

a. NEMA 4X with stainless steel screws.

b. Type 304 L welded stainless steel:

4. Constructed of 14 GA steel with seams continuously welded, ground smooth, no knockouts.

5. Rolled lip around all sides.

6. Rigid handles for covers larger than 9 SF or heavier than 25 LBS.

7. Split covers when heavier than 25 LBS.

E. Terminal Boxes:

1. Galvanized 16 GA steel box provided with plain blank screw cover, subpanel, and terminal points.

2. Refer to Drawing for dimensions and number of terminals.

F. Outlet Boxes:

1. Use: Installation of wiring devices.

2. Boxes for exposed wiring:

a. Cadmium plated, cast, ferrous metal, with threaded hubs.

3. Boxes for concealed wiring:

a. Code gage, hot-dip galvanized steel.

b. Include bar hangers for metal stud partitions.

c. Provide barriers between switches in boxes with 277 V switches on opposite phases.

d. Use extension and plaster rings where required.

e. Provide grounding screw.

PART 3 - EXECUTION

3.01 INSTALLATION

A. Use locknut and bushing for boxes in non-classified areas.

B. Use cast metal boxes with threaded conduit hubs in hazardous areas.

C. Use Type FS and FD boxes in wet areas and where exposed rigid steel conduit is required.

D. Fill unused punched-out, tapped, or threaded hub openings with insert plugs.

E. Use outlet boxes sized to accommodate quantity of conductors enclosed.

F. Use boxes sized to accommodate conduit tying into box.

G. Install pull boxes or junction boxes in conduit runs where indicated or required to facilitate pulling of wires or making connections.

1. Make covers of boxes accessible.

H. Install pull boxes or junction boxes rated for the area classification.

I. Install rigid conduit squarely into boxes which do not have hubs or are drilled and tapped.

1. Install with locknut on the outside and bushing on inside.

J. Install conduit into boxes with hubs, or that are tapped, using thread lubricant.

K. Do not use back-to-back boxes on this Project.

L. Support outlet boxes for incandescent fixtures and other ceiling-mounted devices in lay-in acoustical tile ceilings by bar hangers anchored to ceiling construction members which do not interfere with tile removal.

END OF SECTION

THIS PAGE INTENTIONALLY LEFT BLANK

SECTION 16170
GROUNDING

PART 1 - GENERAL

1.01 SCOPE OF WORK

A. A ground grid system consisting of the indicated configuration of copper wires, and ground rods, or concrete encased grounding electrodes ("UFERs") shall be provided to minimize station potential gradient irregularities and drain leakage and fault currents to earth.

B. Whether indicated on the Drawings or not, neutral conductors, cable shields, metallic conduits, cable terminations, junction boxes, poles, surge arresters, and other noncurrent-carrying metallic parts of equipment shall be grounded.

1.02 SUBMITTALS

A. Products shall be submitted in accordance with Section 16000, and elsewhere in the Contract Documents, prior to installation.

1.03 REFERENCES

A. California Electrical Code (CEC) Article 250.

B. National Electrical Code (NEC) Article 250.

PART 2 - PRODUCTS

2.01 GENERAL REQUIREMENTS

A. All raceways and conduits shall have a ground wire. Ground continuity throughout the facility shall be maintained by installing an electrically continuous grounding conductor.

B. Metallic raceway shall be installed with double lock nuts or hubs at enclosures.

C. All raceway containing DC conductors operating more than 50 volts to ground and any AC conductors shall contain a copper grounding conductor either bare, or green if insulated; such conductor shall be bonded to terminal and intermediate metallic enclosures.

D. Metal equipment platforms which support any electrical equipment shall be bonded to the switchgear ground bus; this grounding requirement is in addition to the raceway grounding requirement.

E. Grounding cable shall be copper and sized in accordance with Code requirements, when not sized on the Drawings.

F. Insulated grounding bushings shall be employed for all grounding connections to steel conduits in motor control equipment and elsewhere where conduits do not terminate at a hub or a sheet metal enclosure.

G. Where insulated bushings are required, they shall be installed in addition to double lock-nuts.

2.02 GROUND RODS

A. Ground rods shall be copper-clad steel conforming to UL 467, 3/4 inch in diameter, sectional type, joined by threaded copper alloy couplings. Locations shall be shown on the drawings; length of rods forming an individual ground array shall be equal in length and of a length as required to obtain a maximum ground resistance of 5 ohms. Top of ground rod shall be fitted with a coupling and steel driving stud. Rods and fittings shall be Copperweld, Blackburn, Weaver, or equal..

2.03 CONNECTIONS

A. Connections above grade shall be made with bolted solderless pressure type connectors, and those below grade shall be made by an exothermic-welding process. Tools and dies shall be as recommended by the manufacturer. An embossing die code or other standard method shall provide visible indication that a connector has been adequately compressed on the ground wire. Connectors shall be of copper alloy and shall be made up wrench-tight.

2.04 GROUNDING ELECTRODE CONDUCTOR

A. Service entrance ground wires shall be sized in accordance with NEC Table 250.66, unless otherwise indicated on the Drawings. After being located to provide maximum physical protection, exposed ground wires shall be securely attached to structural supports at not more than 2-foot intervals with suitable fasteners. Bends greater than 45 degrees in ground wires are not permitted. Routing of ground conductors through concrete should be avoided, except where specifically called for in these Documents. When concrete penetration is necessary, nonmetallic conduit shall be cast flush with the points of concrete entrance and exit, so as to provide an opening for the ground wire. The opening shall be sealed with a suitable compound after installation of the ground wire.

2.05 EQUIPMENT GROUNDING CONDUCTOR

A. Neutral conductors shall be grounded where indicated. Equipment grounding conductors shall be sized in accordance with NEC Table 250.122, unless otherwise indicated. Ground wires shall be protected by conduit, where such wires run exposed above grade in nonfence-enclosed areas, or are run through concrete construction. Where concrete penetration is necessary, nonmetallic conduit shall be cast flush with the points of concrete entrance and exit, so as to provide an opening for the ground wire. The opening shall be sealed with a suitable compound after installation of the ground wire. Bends greater than 45 degrees in ground wire connections to the ground rods, or counterpoises are not permitted.

2.06 EQUIPMENT GROUNDING

A. Equipment frames of motor housings, metallic tanks, metallic equipment enclosures, metal splicing boxes, chain-link fencing, and other metallic noncurrent-carrying metal items, shall be grounded. Connections to earth shall be made in the same

manner as required for system grounding. Equipment or devices operating at less than 750 volts may be connected to secondary neutral grounding electrodes.

2.07 SURGE ARRESTER GROUNDING

A. Surge arresters shall be grounded. Resistance to ground for intermediate-class arresters shall be not more than 10 ohms and for distribution-class arresters shall be not more than 25 ohms. Ground wire connections shall be not less than No. 4 AWG for distribution arresters and No. 1/0 AWG for intermediate arresters. Connections to earth shall be made in the same manner as required for neutral conductors. Surge arrester grounds may use the same ground wires provided for equipment operating at more than 750 volts. Surge arrester and secondary neutral grounds shall be separate from and independent of each other but both grounds shall be bonded together below grade at the ground rods or may utilize a common counterpoise.

2.08 LIGHTING POLE GROUNDING

A. Base of lighting poles shall be connected to an adjacent ground rod as indicated on Drawings. A ground connection from poles back to neutral ground points shall also be provided utilizing equipment grounding conductor.

2.09 METALLIC STRUCTURES

A. Metallic structures and buildings shall be grounded per NEC.

2.10 GROUNDING RINGS

A. When required, grounding rings shall be installed using bare copper cable with ground rods at least 25 feet intervals using thermoweld connecting means as indicated on Drawings in accordance with NEC requirements.

PART 3 - EXECUTION

3.01 INSTALLATION

A. It is the intent of these Contract Documents that all device and equipment grounds shall be run as a separate conductor in the conduit from the equipment to the distribution panels or system ground. Wireways and enclosures shall be properly bonded and grounded, and ground conductors shall be run for all circuits.

B. Equipment cases and devices shall be grounded. Ground rods shall be driven, and concrete encased conduits installed, before a building, or structure is built, and ground conductors brought through the concrete to accessible points for grounding equipment. These systems shall be installed at each structure, where transformers, switchboards, panelboards, and MCCs are installed.

C. Duct banks shall contain a concrete encased system bare copper ground conductor. The system ground conductors shall run continuously in duct banks, through handholes and other raceway boxes. The system ground shall be connected to the structure grounding systems to provide a continuous grounding system. Each

metallic raceway, panel, switchboard, and other metallic devices associated with the electrical and control systems shall be bonded to this grounding system.

D. Ground rod shall be installed not less than 6 inches below grade. In counterpoise systems, tops of ground rods shall be approximately at elevations of counterpoises. Where the specified ground resistance cannot be met with the indicated number of ground rods, additional ground rods, longer ground rods, or deep-driven sectional rods shall be installed and connected until the specified resistance is obtained, except that not more than three additional ground rods shall be required at any one installation. Ground rods shall be spaced as evenly as possible at least 6 feet apart and connected below grade. Equipment, neutral, and surge arrester ground wires shall be connected to the ground grid as indicated.

E. A resistance of not greater than 25 ohms shall be provided, unless otherwise specified. Ground resistances shall be measured as herein described. Resistances of systems requiring separate ground rods, rather than a counterpoise, shall be measured separately before bonding below grade. The combined ground resistance of separate systems bonded together below grade may be used to meet the specified ground resistance, but the minimum number of rods indicated must still be provided.

3.02 TESTS

A. Test the grounding and bonding system in accordance with Specification 16920 – ELECTRICAL ACCEPTANCE TESTING.

B. No part of the electrical system shall be energized until all station grounding system components have been tested and demonstrated to comply with the requirements specified, and until associated test reports have been submitted and approved.

3.03 TEST RESULTS

A. Perform the above tests and submit a certified test report prior to energizing the equipment.

END OF SECTION

SECTION 16195
ELECTRICAL IDENTIFICATION

PART 1 - GENERAL

1.01 SCOPE OF WORK

A. Electrical identification work specified in this section covers the following:

1. Buried cable warnings
2. Electrical power, control and communication conductors
3. Operational instructions and warnings
4. Danger signs
5. Equipment/system identification signs

1.02 SUBMITTALS

A. Submittals to the engineer shall include the following:

1. Manufacturers data on electrical identification materials and products
2. Samples of each color, lettering style and other graphic representation required for each identification material or system

1.03 MANUFACTURERS

A. Subject to compliance with requirements, manufacturers offering electrical identification products maybe incorporated in the work include, but not limited to, the following:

1. Brady, W.H. Co.
2. Ideal Industries, Inc.
3. Panduit Corp.
4. or, equal

1.04 QUALITY COMPLIANCE

A. Comply with applicable requirements of UL Std. 969, "Marking and Labeling Systems", pertaining to electrical identification systems.

B. Comply with applicable requirements of NEMA Std. No's WC-1 and WC-2 pertaining to identification of power and control conductors.

PART 2 - PRODUCTS

2.01 GENERAL

A. Except as otherwise indicated, provide manufacturer's standard products of categories and types required for each application. Where more than single type is specified for an application, selection is Installer's option, but provide single selection for each application.

2.02 CONDUIT MARKERS

A. Conduit tags shall be 1-1/2-inch diameter, round, aluminum tags, laser engraved or standard engraving with the conduit number. Punched or stamped lettering is not allowed. Font shall be 1/4-inch Arial or Helvetica. The conduit tags shall be manufactured by Brady, Catalog No. 49900 or equal.

B. Each tag shall be attached with nylon-coated 48-mil stainless steel wire and fasteners, as manufactured by Brady, Catalog No. 38091, and brass wire clamps, double ferrule design, as manufactured by Brady Catalog No. 38090 to secure the stainless steel wire or equal.

C. Unless otherwise indicated or required by governing regulations, provide white markers with black letters.

2.03 CABLE AND CONDUCTOR WIRE MARKERS

A. Cable and conductor wire markers shall be self laminating vinyl on white background, printed using a Brady TLS2200 printer, Seton printer, or equal. Handwritten wire markers are not acceptable.

2.04 SELF-ADHESIVE PLASTIC SIGNS

A. Provide manufacturer's standard, self-adhesive or pressure-sensitive, pre-printed, flexible vinyl signs for operational instructions or warnings; of sizes suitable for application areas and adequate for visibility, with proper wording for each application, e.g., 208V, EXHAUST FAN, RECTIFIER.

B. Unless otherwise indicated or required by governing regulations, provide white signs with black lettering.

2.05 LETTERING AND GRAPHICS

A. Coordinate names, abbreviations and other designations used in electrical identification work, with corresponding designations shown, specified or scheduled. Provide numbers, lettering and wording as indicated or, if not otherwise indicated, as recommended by manufacturers or as required for proper identification and operation/maintenance of electrical systems and equipment. Comply with ANSI A13.1 pertaining to minimum sizes for letters and numbers.

PART 3 - EXECUTION

3.01 INSTALLATION

A. Completed electrical installation shall be provided with adequate identification to facilitate the proper control of circuits and equipment and to reduce maintenance effort.

B. Install electrical identification products as indicated, in accordance with manufacturer's written instructions, and requirements of NEC.

C. Where identification is to be applied to surfaces that require finish, install identification after completion of painting.

D. Comply with governing regulations and requests of governing authorities for identification of electrical work.

E. The method of identification shall be durable, smudge and fade resistant, imprinted heat shrink tubing.

F. Multi-conductor cable shall be assigned a number which shall be attached to the cable at intermediate pull boxes and at stub-up locations beneath free-standing equipment. It is expected that the cable number will form part of the individual wire number. All individual conductors (including conductors part of multi-conductor cables) shall all be identified at pull points as described.

3.02 CONDUIT IDENTIFICATION

A. Where electrical conduit is exposed in spaces with exposed mechanical piping that is identified by a color-coded method, apply color-coded identification on electrical conduit in manner similar to piping identification. Except as otherwise indicated, use white as coded color for conduit.

3.03 CABLE/CONDUCTOR IDENTIFICATION

A. Apply cable/conductor identification, including voltage, phase and feeder number, on each cable/conductor in each box/enclosure/cabinet where wires of more than one circuit or communication/signal system are present, except where another form of identification (such as color-coded conductors) is provided. Match identification with marking system used in panelboards, shop drawings, contract documents, and similar previously established identification for project's electrical work.

B. Each control wire and cable shall have a unique identification number that is assigned to all conductors having common terminals and shall be shown on all shop drawings. These numbers shall appear within 3-inches of conductor terminals. Control wires and cables shall be defined as any conductor used for alarm, signal, switch or relay contacts, or relay coils.

3.04 EQUIPMENT/SYSTEM IDENTIFICATION

A. Install engraved plastic-laminate sign on each major unit of electrical equipment in building; including central or master unit of each electrical system including

communication-control-signal systems, unless unit is specified with its own self-explanatory identification or signal system. Except as otherwise indicated, provide single line of text, 1/2" high lettering on 1-1/2" high sign (2" high where 2 lines are required), white lettering in black field. Provide text matching terminology and numbering of the contract documents and shop drawings. Provide signs for each unit of the following categories of electrical work:

1. Panelboards, electrical cabinets and enclosures.

2. Access panel/doors to electrical facilities.

3. Major electrical switchgear.

B. Install signs at locations indicated or, where not otherwise indicated, at location for best convenience of viewing without interference with operation and maintenance of equipment. Secure to substrate with brass or stainless steel screws, except use adhesive where screws should not or cannot penetrate the substrate.

3.05 CIRCUIT IDENTIFICATION

A. The 3-phase wires shall be identified at the switchgear, panelboards and motor control centers as Phases A, B, and C.
   1. At 277/480V, Phase A shall be brown, Phase B shall be orange, and Phase C shall be yellow. The neutral shall be natural gray.
   2. At 120/240V, Phase A shall be black, Phase B shall be red, and Phase C shall be blue. The neutral shall be white.

B. Branch circuit switch conductors shall be yellow.

C. Insulated ground wire shall be green, and white for neutral.

D. Color coding tape shall be used where color insulation is not available. Color coding and phasing shall be consistent throughout the site, with bus bars at panelboards, and the motor control center shall be connected by Phase A-B-C, top to bottom, or left to right facing connecting lugs.

E. Motor Control Center (MCC) and Field Conductors
   1. General purpose AC control conductors shall be red.
   2. General purpose DC control conductors shall be blue
   3. All spare conductors shall be terminated on terminal screws and shall be identified with a unique number as well as with destination.
   4. Nameplates shall be provided for panelboard, panel, starter, switches, pushbutton stations, etc. In addition to the nameplates shown on the Drawings, control devices shall be equipped with standard collar type legend plates, as required
   5. Control devices within enclosures shall be identified in accordance with the Drawings; identification shall be on the mounting plate and shall be similar to above.
   6. Terminal strips shall be identified by imprinted labels, attached under the terminal strip.

F. In addition to color coding all conductors, each conductor shall be identified in each pull box, manhole, panelboard, cable tray, or termination with circuit identification markers. This identification is applicable to all power, control, alarm, and instrumentation conductors and these markings shall be recorded on the Record Documents. Markers shall be slip-on PVC sleeve type as manufactured by Brady, Seton, or equal.

G. Markers for other cabling shall be B-292 vinyl as manufactured by Brady, Seton, or equal.

H. Exposed medium voltage conduits shall be labeled at 50-foot intervals with 1-inch letters stating the voltage - example - “12,470 volts”. Labels shall be vinyl plastic as manufactured by Brady, Seton, or equal.

3.06 AUTOMATIC EQUIPMENT WARNING SIGNS

A. Permanent warning signs shall be mounted at all mechanical equipment that may be started automatically or from remote locations. Signs shall be in accordance with OSHA regulations and shall be suitable for exterior use. The warning signs shall be fastened with round head brass screws or bolts, located and mounted in a manner acceptable to the Engineer.

B. Warning signs shall be 7 inches high by 10 inches wide, colored yellow and black, on not less than 18 gauge vitreous enameling stock. Sign shall read:

CAUTION
THIS EQUIPMENT STARTS
AUTOMATICALLY
BY REMOTE CONTROL

3.07 CONDUCTOR FASTENERS

A. Glue-on type conductor fasteners shall not be used in any panels, panelboards, switchboards, switchgear, motor control centers, or other enclosures containing electrical devices and/or conductors.

END OF SECTION

THIS PAGE INTENTIONALLY LEFT BLANK

SECTION 16420
SERVICE ENTRANCE SECTION

PART 1 - GENERAL

1.01 SCOPE OF WORK

A. This section covers the service entrance section and related service equipment.

1.02 SUBMITTALS

A. Products shall be submitted in accordance with Section 16000, and elsewhere in the Contract Documents, prior to installation.

B. The contractor shall submit shop drawings, catalog cuts, single line diagrams, component layout drawings and equipment elevation. Shop drawings must indicate all ratings, bus bracing, phasing, and utility requirements.

C. Catalog cuts must be submitted for the service entrance section and components within. Each catalog cut must be properly identified with catalog number and indexed for easy reference.

D. Single line diagrams must be complete with circuit numbers to match the Drawings. Components must be sized and shown in a bill of materials.

E. A wiring diagram must be submitted to show connection and control of devices such as ground fault protection, phase protection relays, and other components. Wiring diagram must include component numbers, matching the bill of materials.

F. Service entrance section must be approved for connection by the serving utility company prior to Engineer's review.

G. The SES must be UL listed as a complete assembly suitable for Service Entrance Duty.

1.03 QUALIFICATIONS

A. The manufacturer of the assembly shall be the manufacturer of the major components within the assembly.

B. The manufacturer of this equipment shall have produced similar electrical equipment for a minimum period of five (5) years. When requested by the Engineer, an acceptable list of installations with similar equipment shall be provided demonstrating compliance with this requirement.

C. Provide Seismic tested equipment as follows:

D. The manufacturer may certify the equipment based on a detailed computer analysis of the entire assembly structure and its components. Guidelines for the installation consistent with these requirements shall be provided by the switchgear manufacturer and be based upon testing of representative equipment. The equipment manufacturer

shall document the requirements necessary for proper seismic mounting of the equipment.

E. The following minimum mounting and installation guidelines shall be met, unless specifically modified by the above referenced standards.

a. The Contractor shall provide equipment anchorage details, coordinated with the equipment mounting provision, prepared and stamped by a licensed civil engineer in the state. Mounting recommendations shall be provided by the manufacturer based upon approved shake table tests used to verify the seismic design of the equipment.

b. The equipment manufacturer shall certify that the equipment can withstand, that is, function following the seismic event, including both vertical and lateral required response spectra as specified in above codes.

c. The equipment manufacturer shall document the requirements necessary for proper seismic mounting of the equipment. Seismic qualification shall be considered achieved when the capability of the equipment, meets or exceeds the specified response spectra.

1.04 REGULATORY REQUIREMENTS

A. The low-voltage metering switchboard shall be UL labeled.

1.05 DELIVERY, STORAGE AND HANDLING

A. Equipment shall be handled and stored in accordance with manufacturer's instructions. One (1) copy of these instructions shall be included with the equipment at time of shipment.

1.06 OPERATION AND MAINTENANCE MANUALS

A. Equipment operation and maintenance manuals shall be provided with each assembly shipped and shall include instruction leaflets, instruction bulletins and renewal parts lists where applicable, for the complete assembly and each major component.

PART 2 - PRODUCTS

2.01 MANUFACTURERS

A. Eaton / Cutler-Hammer or equal.

B. The listing of specific manufacturers above does not imply acceptance of their products that do not meet the specified ratings, features and functions. Manufacturers listed above are not relieved from meeting these specifications in their entirety. Products in compliance with the specification and manufactured by others not named will be considered only if pre-approved by the Engineer ten (10) days prior to bid date.

2.02 RATINGS

A. The assembly shall be rated to withstand mechanical forces exerted during short-circuit conditions when connected directly to a power source having an available fault current of 65,000 amperes symmetrical at rated voltage or as indicated on drawings.

2.03 CONSTRUCTION

A. The entire assembly shall be front accessible and shall consist of main lugs or main device as shown on the plans.

B. All metering shall be in accordance with all local utility requirements.

C. Tenant disconnects shall be molded case breakers as shown on the plans.

D. The meter sockets shall be ring-type with test/bypass/disconnect block rated 200 amperes continuous as shown on the plans. The meter sockets and associated branch protective devices shall be completely pre-wired and shipped ready for installation of the meters. Meter sockets shall include covers with sealing provisions.

E. Feeder devices 150-ampere frame through 1200-ampere frame shall be panel-mounted-type construction. Devices over 1200-ampere frame or main devices shall be individually mounted when required.

2.04 BUS

A. All bus bars shall be silver-plated copper. Main horizontal bus bars shall be mounted with all three phases arranged in the same vertical plane. Bus sizing shall be based on NEMA standard temperature rise criteria of 65 degrees C over a 40 degrees C ambient (outside the enclosure).

B. Provide a full capacity neutral bus where a neutral bus is indicated on the drawings.

C. A copper ground bus (minimum 1/4 x 2 inch), shall be furnished firmly secured to each vertical section structure, and shall extend the entire length of the switchboard.

D. All hardware used on conductors shall be high-tensile strength and zinc-plated. All bus joints shall be provided with conical spring-type washers.

2.05 WIRING/TERMINATION

A. Small wiring, necessary fuse blocks and terminal blocks within the switchboard shall be furnished as required. Control components mounted within the assembly, such as fuse blocks, relays, pushbuttons, switches, etc., shall be suitably marked for identification corresponding to appropriate designations on manufacturer's wiring diagrams.

B. Mechanical-type terminals shall be provided for all line and load terminations suitable for copper or aluminum cable rated for 75 degrees C of the size as indicated on the drawings.

C. Lugs shall be provided in the incoming line section for connection of the main grounding conductor. Additional lugs for connection of other grounding conductors shall be provided as indicated on the drawings.

D. All control wire shall be type SIS, bundled and secured with nylon ties. Insulated locking spade terminals shall be provided for all control connections, except where saddle-type terminals are provided integral to a device. All current transformer secondary leads shall first be connected to conveniently accessible short-circuit terminal blocks before connecting to any other device. All groups of control wires leaving the switchboard shall be provided with terminal blocks with suitable numbering strips. Provide wire markers at each end of all control wiring.

2.06 ENCLOSURES

A. NEMA 1 Enclosure

B. Outdoor NEMA 3R Enclosure.

1. Outdoor enclosure shall be non-walk-in and meet applicable NEMA 3R requirements of UL.
2. Enclosure shall have flat roof.
3. Doors shall have provisions for padlocking.
4. Ventilating openings shall be provided.

2.07 NAMEPLATES

A. Engraved nameplates, mounted on the face of the assembly, shall be furnished for all main and feeder circuits as indicated on the drawings. Nameplates shall be laminated plastic, black characters on white background. Characters shall be 3/16-inch high, minimum. Nameplates shall give item designation and circuit number as well as frame ampere size and appropriate trip rating. Furnish master nameplate giving switchboard designation, voltage ampere rating, short-circuit rating, manufacturer's name, general order number, and item number.

2.08 FINISH

A. All exterior and interior steel surfaces of the switchboard shall be properly cleaned and provided with a rust-inhibiting phosphatized coating. Color and finish of the switchboard shall be ANSI 61 light gray.

2.09 EXECUTION

2.10 FACTORY TESTING

A. The following standard factory tests shall be performed on the equipment provided under this section. All tests shall be in accordance with the latest version of ANSI and NEMA standards.

B. The switchboard shall be completely assembled, wired, adjusted, and tested at the factory. After assembly, the complete switchboard will be tested for operation under simulated service conditions to assure the accuracy of the wiring and the functioning of all equipment. The main circuits shall be given a dielectric test of 2200 volts for one (1) minute between live parts and ground and between opposite polarities. The wiring and control circuits shall be given a dielectric test of 1500 volts for one (1) minute between live parts and ground.

C. The manufacturer shall provide three (3) certified copies of factory test reports.

2.11 MANUFACTURER'S CERTIFICATION

A. A certified test report of all standard production tests shall be available to the Engineer upon request.

2.12 INSTALLATION

A. The Contractors shall install all equipment per the manufacturer's recommendations and the contract drawings.

B. The assembly shall be provided with adequate lifting means and shall be capable of being moved into installation position and bolted directly to the floor without the use of floor sills providing the floor is level to 1/8 inch per 3-foot distance in any direction. All necessary hardware to secure the assembly in place shall be provided by the Contractor.

2.13 TESTING

A. Test in accordance with Specification 16920 – ELECTRICAL ACCEPTANCE TESTING.

End of Section

THIS PAGE INTENTIONALLY LEFT BLANK

SECTION 16461
LOW-VOLTAGE TRANSFORMERS

PART 1 - GENERAL

1.01 REFERENCES

A. The following is a list of standards which may be referenced in this section:

1. Code of Federal Regulations (CFR): 10 CFR Part 431, DOE 2016 efficiency.

2. Institute of Electrical and Electronics Engineers (IEEE): C57.96, Guide for Loading Dry Type Transformers.

3. National Electrical Contractor's Association (NECA): 409, Recommended Practice for Installing and Maintaining Dry-Type Transformers.

4. National Electrical Manufacturers Association (NEMA):

   a. 250, Enclosures for Electrical Equipment (1000 Volts Maximum).

   b. ST 20, Dry-Type Transformers for General Applications.

5. National Fire Protection Association (NFPA): 70, National Electrical Code (NEC).

6. Underwriters Laboratories, Inc. (UL):

   a. 486E, Standard for Equipment Wiring Terminals for use with Aluminum and/or Copper Conductors.

   b. 489, Standard for Molded-Case Circuit Breakers, Molded-Case Switches, and Circuit Breaker Enclosures.

   c. 1561, Standard for Dry-Type, General Purpose, and Power Transformers.

1.02 SUBMITTALS

A. Action Submittals:

1. Descriptive information.

2. Dimensions and weight.

3. Transformer nameplate data, including efficiency.

4. Schematic and connection diagrams.

5. Anchorage and bracing drawings and cut sheets, as required by Section 05550 – ANCHORAGE IN CONCRETE AND MASONRY.

B. Informational Submittals:

1. Anchorage and bracing calculations as required by Section 05550 – ANCHORAGE IN CONCRETE AND MASONRY.

2. Test Report: Sound test certification for dry type power transformers (0 volt to 600 volt, primary).

3. Component and attachment testing seismic certificate of compliance as required by Section 16920 – ELECTRICAL ACCEPTANCE TESTING.

PART 2 - PRODUCTS

2.01 GENERAL

A. UL 1561, NEMA ST 20, unless otherwise indicated.

B. Dry-type, self-cooled, two-winding, with copper windings.

C. Units larger than 5 kVA suitable for use with 75 degrees C wire at full NFPA 70, 75 degrees C ampacity.

D. Efficiency: Meet or exceed DOE 2016 efficiency requirements. Transformers 15 kVA and larger shall comply with Title 20 and Title 24.

E. Maximum Sound Level per NEMA ST 20:

1. 40 decibels for 0 kVA to 9 kVA.

2. 45 decibels for 10 kVA to 50 kVA.

3. 50 decibels for 51 kVA to 150 kVA.

4. 55 decibels for 151 kVA to 300 kVA.

5. 60 decibels for 301 kVA to 500 kVA.

F. Overload capability: Short-term overload per IEEE C57.96.

G. Wall Bracket: For single-phase units, 15 kVA to 37-1/2 kVA, and for three-phase units, 15 kVA to 30 kVA.

H. Vibration Isolators:

1. Rated for transformer's weight.

2. Isolation Efficiency: 99 percent, at fundamental frequency of sound emitted by transformer.

3. Less Than 30 kVA: Isolate entire unit from structure with external vibration isolators.

4. 30 kVA and Above: Isolate core and coil assembly from transformer enclosure with integral vibration isolator.

I. Manufacturers:

1. Square D Co.
2. Eaton/Cutler-Hammer.
3. Or approved equal.

2.02 GENERAL PURPOSE TRANSFORMER

A. Insulation Class and Temperature Rise: Manufacturer's standard.

B. Core and Coil:

1. Encapsulated for single-phase units 1/2 kVA to 25 kVA and for three-phase units 3 kVA to 15 kVA.
2. Thermosetting varnish impregnated for single-phase units 37.5 kVA and above, and for three-phase units 30 kVA and above.

C. Enclosure:

1. Single-Phase, 3 kVA to 25 kVA: NEMA 250, Type 3R, nonventilated.

2. Single-Phase, 37-1/2 kVA and Above: NEMA 250, Type 2, ventilated.

3. Three-Phase, 3 kVA to 15 kVA: NEMA 250, Type 3R, nonventilated.

4. Three-Phase, 30 kVA and Above: NEMA 250, Type 2, ventilated.

5. Outdoor Locations: NEMA 250, Type 3R.

6. Corrosive Locations: NEMA 250, Type 3R stainless steel.

D. Voltage Taps:

1. Single-Phase, 3 kVA to 10 kVA: Two 5 percent, full capacity, below normal voltage rating.
2. Single-Phase, 15 kVA and Above: Four 2-1/2 percent, full capacity; two above and two below normal voltage rating.
3. Three-Phase, 3 kVA to 15 kVA: Two 5 percent, full capacity below normal voltage rating.
4. Three-Phase, 30 kVA and Above: Four 2-1/2 percent, full capacity; two above and two below normal voltage rating.

E. Impedance: 2.5 percent minimum on units 75 kVA and larger.

PART 3 - EXECUTION

3.01 INSTALLATION

A. Install in accordance with NECA and manufacturer's instructions.

B. Load external vibration isolator such that no direct transformer unit metal is in direct contact with mounting surface.

C. Provide moisture-proof, flexible conduit for electrical connections.

D. Connect voltage taps to achieve (approximately) rated output voltage under normal plant load conditions.

E. Provide wall brackets for single-phase units, 15 kVA to 167-1/2 kVA, and three-phase units, 15 kVA to 30 kVA.

END OF SECTION

SECTION 16470
PANELBOARDS

PART 1 - GENERAL

1.01 SECTION INCLUDES

A. Panelboards furnished in accordance with the Plans and this specification.

1. Service entrance rated main distribution panelboards.

2. Distribution panelboards.

3. Lighting and appliance branch circuit panelboards.

4. Electronic Power Metering on panelboards per Section 2.05, when specified.

1.02 RELATED SECTIONS

A. Section 16000 – General Electrical Requirements

B. Section 16195 - Electrical Identification

1.03 CODES, STANDARDS, AND REGULATORY REQUIREMENTS

A. All parts, materials, assembly, installation, testing and commissioning shall meet the requirements of the latest edition of the following Codes and Standards, and Regulatory agencies. In case of the conflict between the codes' requirement, the most stringent shall apply.

1. Underwriters' Laboratories:
   a. Panelboards: UL 67
   b. Enclosures for Electrical Equipment: UL 50
   c. Molded Case Circuit breakers and Circuit Breaker Enclosures: UL489

2. FS W-C-375 - Circuit Breakers, Molded Case, Branch Circuit and Service.

3. FS W-P-115 - Power Distribution Panel.

4. NEMA AB 1 - Molded Case Circuit Breakers.

5. NEMA PB 1 - Panelboards.

6. NEMA PB 1.1 - Instructions for Safe Installation, Operation and Maintenance of Panelboards Rated 600 Volts or Less.

7. NEMA PB 1.2 - Application Guide for Ground-fault Protective Devices for Equipment.

8. California Electrical Code.

9. NFPA 70 - National Electrical Code

10. UBC - Uniform Building Code.

11. NETA - International Electrical Testing Association.

1.04 SUBMITTALS

A. Shop drawings for equipment and component devices.

B. Include outline and support point dimensions, voltage, main bus ampacity, integrated short circuit ampere rating, circuit breaker arrangement, sizes and numbering system.

C. Include information on all the accessories, locking hardware, shunt trip, under-voltage release mechanism, typical thermal magnetic curves for each size and type.

1.05 SPARE PARTS

A. Keys: Furnish two door keys for each panelboard.

PART 2 - PRODUCTS

2.01 MANUFACTURERS

A. General Electric

B. Square D

C. Cutler-Hammer

D. Approved Equal

2.02 BUS AND HARDWARE

A. Panelboards shall be completely factory assembled and equipped with the type, size and number of branch circuit breakers, arranged and numbered as shown on the Plans. Panelboards shall be fully rated. Series rated panelboards are not acceptable.

B. All multi-pole breakers shall be common trip. Branch circuits shall be arranged using double row construction. Bus sequence shall be ABC top to bottom, left to right for both top and bottom fed panels. Provisions or space for future breakers shall be located at the bottom of the panel and be fully bussed, complete with all necessary mounting hardware. Use at least 100 ampere breaker-connecting bus straps and mounting hardware.

C. Where SPARE is indicated on the panel schedule(s), the specified circuit breaker and at least 100 ampere branch-circuit busing and mounting hardware shall be installed.

D. Where SPACE is indicated on the panel schedule(s), 100 ampere branch-circuit busing and mounting hardware shall be installed, ready for future installation of circuit breakers, furnished by others. At least 20% spare pole spaces, grouped in

multiples of three, shall be provided in each panelboard, for future installation by the Owner. Provide single pole filler plates in the spaces, as required.

E. A nameplate shall be provided, and located near the top of the front trim on the exterior surface, listing panel type and ratings, as required by UL. Each circuit shall be permanently numbered to agree with the panel schedule, using plastic or metal buttons mounted adjacent to the breaker and secured by rivets or grommets with an engraved or depressed number. Adhesive numbering tape, painted numbers, or use of more than one number per breaker is not acceptable.

F. Main vertical bus bars shall be copper and silver or tin plated per UL requirements. Bus bars shall be supported by glass-filled polyester-type insulators. All bolts, used to connect current-carrying parts together, shall be accessible for tightening from the front of the panel. Bus bars shall be factory drilled and tapped with spacing arranged to permit breaker interchange, from the front, while the panel is energized.

G. Neutral bus shall be copper and insulated from the cabinet and all other parts. It shall be rigidly mounted in the panel and shall be provided with a solderless cable connector for each circuit breaker and each space in the panelboard and the main connecting lug(s).

H. A 1/4-inch (8mm) thick copper equipment ground bus, of sufficient width and length, shall be solidly bolted and grounded to the enclosure at the bottom and shall leave clear space for the bottom cable entries. The bus shall be drilled and tapped for 1/4" (8mm) - #20 machine screws in number to agree with branch circuits and spaces. A solderless connector, for No. 2 to No. 4/0 cable size, shall be bolted to the ground bus.

I. Copper bus bars shall be of sufficient size to provide a current density of not more than 1000 amperes per square inch of cross section, and not more than 200 amperes per square inch at bolted connections.

J. Minimum Short Circuit Rating for Bus Bracing: The bus shall be braced for the minimum symmetrical short circuit rating of the panel, as shown on the panel schedule.

K. Provide main bus pressure connectors (main lugs) and separately supported sub-feed pressure connectors (lug landings) where noted. Provide additional bottom raceway space to accommodate pressure connectors and lug landings. In no instance shall the gutter space be less than required by NFPA-70.

L. Provide Transient Voltage Surge Suppression where required on Plans.

M. Where required on Plans, provide re-installed locking devices for locking each circuit breaker in the OPEN position, by means of a padlock. Locking devices shall not be removable from the front of the panel with the trim in place. Attachment of the locking device to the panel with adhesives is not acceptable.

2.03 CIRCUIT BREAKERS

A. Molded Case Circuit Breakers: NEMA AB 1; provide bolt-on type circuit breakers with integral thermal and instantaneous magnetic trip in each pole and common trip handle for all poles. Provide circuit breakers, UL listed as Type HACR, for air conditioning equipment branch circuits. Provide circuit breakers, UL listed as Type SWD, for lighting circuits. Provide UL Class A ground fault interrupter circuit breakers where shown on Plans.

B. Instantaneous magnetic trips shall be accessible and adjustable from the front of the breaker on frame sizes above 100 amperes.

C. All breakers shall be rigidly mounted, separately removable and independent of trim plates for their support. Breakers shall be bolt on type.

D. The minimum width of one pole shall be 1-3/8 inches. The breaker shall be "E" frame minimum.

E. The minimum symmetrical interrupting rating for molded-case circuit breakers shall be as specified on the panel schedule(s). Series rated breakers are not acceptable.

2.04 CABINETS (BOXES)

A. All details of construction and methods of assembly shall meet the requirements of the "Enclosures for Electrical Equipment" of the Underwriters' Laboratories. The panel box shall be of sufficient height to enclose the specified main and branch circuit breakers, buses, metering equipment and wire gutter. The panelboard enclosure shall be fabricated from code-gauge galvanized or galvanized-annealed steel without knockouts and with full front flange. The panel front shall be as shown on the plans and fabricated from cold rolled steel. Surface mounted panel boxes shall be finished with an ANSI-61 light grey baked enamel. There shall be no screws projecting into the wiring raceways. The panelboard enclosure type shall be coordinated with the environment and location shown on the plans. Unless noted otherwise on the panel schedule, provide the following:

1. Corrosive Environments: NEMA 4X

2. Outdoors: NEMA 3R

3. Indoors: NEMA 12

B. The front trim shall have full-length hinged outer door designed to expose the wiring raceways and breakers, when open. Another, inner hinged door shall expose breakers only, when open, making this a door-in-door construction. Both doors shall open to the right.

C. Both doors shall be provided with concealed butt or piano hinges. A suitable latch, which can be operated without tools, shall be provided to properly hold the inner door closed. For doors 30 inches (765mm) high or less, a flush-type latch is satisfactory. For doors more than 30 inches (765) high, a vault-type handle shall be provided with a three-point latch that holds the door closed at the top and bottom.

The outer door shall be secured with at least four (4) captured oval head machine screws.

D. A sturdy metal frame, with a clear plastic cover, for an 8-1/2 inch x 11 inch panel schedule, shall be attached inside of the panel door with the RTV adhesive.

E. Panel trim and doors, and surface mounted cabinets shall be thoroughly cleaned, given a rust-inhibiting treatment, and finished with an ANSI-61 light grey baked enamel.

F. All panelboards shall bear the Underwriters' Laboratories label.

2.05 EXCEPTIONS

A. The bidders shall list all the exceptions taken from the specification with their quote. If no exceptions are listed with the bid, it is understood that the bidder shall meet all the requirements of this specification and applicable Codes and Standards.

PART 3 - EXECUTION

3.01 INSTALLATION

A. Install panelboards plumb and flush with wall finishes, in conformance with NEMA PB 1.1. Where surface mounted, provide suitable supports and rack all branch circuit conduits. Where mounted on concrete wall, install with ½" (15mm) steel spacers behind the panel. All mounting attachments and connections shall be designed in conformance with the minimum lateral seismic force of 0.5g per the most current adopted version of the UBC.

B. Height: Install top of trim 78 inches above finished floor, unless otherwise noted on drawings.

C. Provide filler plates for unused spaces in panelboards.

D. Provide typed or neatly hand printed 8-1/2x11-inch circuit directory for each panelboard, in the format as shown on the drawings. Revise directory to reflect circuiting changes required to balance phase loads.

3.02 QUALITY CONTROL

A. Owner reserves the right to witness any of the following tests conducted by the contractor and shall be notified in advance of these tests. Test in accordance with Specification 16920 – ELECTRICAL ACCEPTANCE TESTING.

B. Measure steady state load currents at each panelboard feeder. Should the difference at any panelboard between phases exceed 20 percent, rearrange circuits in the panelboard to balance the phase loads within 20 percent. Maintain proper phasing for multi-wire branch circuits.

3.03 FINAL SUBMITTALS

A. After completion of the installation, wiring and testing, submit the following information within two weeks of the equipment acceptance.

1. As-Built Panel Schedules.

2. Copy of the certified test report described in Section 3.02.

END OF SECTION

SECTION 16474

MOTOR CONTROL CENTERS

PART 1 - GENERAL

1.1 DESCRIPTION

A. Scope: Contractor shall provide all labor, materials, equipment and incidentals as shown, specified and required to furnish and install Motor Control Center.

B. Coordination: Obtain motor nameplate data on equipment being furnished for properly sizing circuit breakers, starters and overloads.

C. Obtain service information from SCE prior to submission of shop drawings

1.2 QUALITY ASSURANCE

A. Reference Standards: Comply with applicable provisions and recommendations of the following except where otherwise shown or specified:

1. UL Standard #845 – Electric Motor Control Centers

2. NEMA ICS2-322 – AC General Purpose Motor Control Centers

3. National Electrical Code

1.3 SUBMITTALS

A. Shop Drawings: Submit for approval the following:

1. Manufacturer's technical information for motor control centers proposed for use.

2. Outline and summary sheets with schedules of equipment in each unit.

3. Unit control schematic and elementary wiring diagrams showing numbered terminal points and interconnections to other units. Complex schematics shall be drawn to JIC Standards.

4. Prepare and submit seismic design calculations for sizing and spacing of anchor bolts. Calculations shall be signed and sealed by a registered structural engineer in the State of California.

PART 2 - PRODUCTS

2.1 MATERIALS

A. General: Motor control center lineup shall be provided as shown on the Drawings.

1. Service: The Motor Control Center (MCC) shall operate from a 480 volt, 3-phase, 3 wire, 60 hertz system with provisions for terminating and bonding of utility and generator neutrals in accordance with the NEC.

2. Wiring: NEMA Class II, Type B.

3. Enclosure: NEMA 12 with gasketed door.

4. Ambient: Equipment shall be rated for a 40°C ambient.

B. Construction:

1. Totally enclosed structure, dead front, consisting of nominal 20- inch deep, width as indicated on drawings, and 90-inch high vertical sections bolted together to form a unit assembly.

2. Removable lifting angles for each shipping section.

3. Two removable floor sills for mounting.

4. Horizontal wireways top and bottom, isolated from horizontal bus and readily accessible.

5. Isolated vertical wireways with cable supports, accessible through hinged doors, for each controller section.

6. All metal non-conducting parts electrically continuous.

C. Bus System:

1. Rating: Bus bracing 65kA. Bus current capacities as indicated on the Drawings.

2. All bus bars tin plated copper rated UL heat rise standards.

3. Bus bar connections easily accessible with simple tools.

4. Main Horizontal Bus: Continuous edge mounted, insulated and isolated from wireways and working areas.

5. Vertical Bus: Continuous, insulated, and isolated by a glass polyester barrier.

6. Grounding Bus: Full length mounted across the bottom, drilled and with compression type lugs of appropriate capacity as required, copper.

D. Unit Compartments:

1. Individual front door for each unit compartment with engraved nameplate identifying equipment. Nameplates to be 1 inch by 3 inches minimum, secured to unit door with two screws.

2. Starter and feeder-unit doors interlocked mechanically with the unit disconnect device to prevent unintentional opening of the door while energized and unintentional application of power while door is open, with provisions for releasing the interlock for intentional access and application of power.

3. Padlocking arrangement permitting locking the disconnect device in the OFF position with at least three padlocks with the door closed or open.

4. Overload Relays: Three melting alloy or thermal bimetallic type, manually reset from outside the enclosure by means of an insulated button with normally open auxiliary contact for remote alarm purposes and separate heater elements sized for the full load amperes and service factor of the actual motors furnished.

5. Motor horsepowers shown are preliminary. Circuit breaker trips and starter overload heaters to be coordinated with the actual equipment installed.

6. Auxiliary contacts, relays, timers as required for specified control functions and those shown on the Drawings. Auxiliary contacts shall be field convertible. See Section 16923.

7. All starter devices, including spare contacts wired to numbered terminal blocks, which shall be pull-out type for all starters.

8. Control devices shall be 600 volt heavy duty, NEMA A600 unless otherwise noted. Relays shall have convertible contacts. Pilot devices shall be heavy duty oil tight, dust tight, water tight; 30mm; and LED. All pilot devices shall be furnished with and engraved legend plate. Indicating lights shall be push-to-test.

9. Feeder Circuit Breakers: Thermal magnetic type, interrupting capacity of 65,000A minimum.

10. Motor Starter Circuit Breakers: Magnetic trip only motor circuit protectors, interrupting capacity of 65,000A minimum.

11. Each starter shall be provided with one extra N.O. and one extra N.C. auxiliary contact in addition to the seal-in contact and those required by the control diagrams.

12. Provide the following diagrams and tables on the inside of the door for each compartment:

a. Elementary wiring diagram

b. Table of overload heater sizes with the correct heater highlighted

c. Table of the motor circuit protector settings with the correct setting highlighted

13. The incoming breaker shall have ammeter and voltmeter and switches or provide Metering Module in accordance with Section 16290. Power monitor is located in switchboard (MSB)

14. Lights, switches, push buttons, indicators, and other panel devices shall be as specified in Section 16923.

E. Transient Voltage Suppression Devices

1. Surge Protection Device Description: IEEE C62.41-compliant, integrally mounted, bolt-on, solid-state, parallel-connected, modular (with field-replaceable modules) type, with sine-wave tracking suppression and filtering modules, UL 1449, second edition, short-circuit current rating matching or exceeding the MCC short-circuit rating, and with the following features and accessories.

a. Fuses, rated at 200-kA interrupting capacity.

b. Fabrication using bolted compression lugs for internal wiring.

c. Integral disconnect switch.

d. Redundant suppression circuits.

e. Redundant replaceable modules.

f. Arrangement with wire connections to phase buses, neutral bus, and ground bus.

g. LED indicator lights for power and protection status.

h. Audible alarm, with silencing switch, to indicate when protection has failed.

i. Form-C contacts rated at 5 A and 250-V ac, one NO and one NC, for remote monitoring of system operation. Contacts shall reverse position on failure of any surge diversion module or on opening of any current-limiting device. Coordinate with building power monitoring and control system.

j. Six-digit, transient-event counter set to totalize transient surges.

2. Peak Single-Impulse Surge Current Rating: 120 kA per mode/240 kA per phase.

3. Withstand Capabilities: 12,000 IEEE C62.41, Category C3 (10 kA), 8-by-20-mic.sec. surges with less than 5 percent change in clamping voltage.

4. Protection modes and UL 1449 SVR for grounded wye circuits with 480Y/277-V, three-phase, four-wire circuits shall be as follows:

   a. Line to Neutral: 800 V for 480Y/277.

   b. Line to Ground: 800 V for 480Y/277.

   c. Neutral to Ground: 800 V for 480Y/277.

5. Protection modes and UL 1449 SVR for 480-V, three-phase, three-wire, delta circuits shall be as follows:

   a. Line to Line: 2000 V for 480 V.

   b. Line to Ground: 1500 V for 480 V.

F. Spare Parts:

1. Provide the following spare parts for the motor control center lineup:

   a. Two fuses of each size and type used

   b. One auxiliary control relay with at least two normally open and two normally closed contacts

   c. One control transformer of each size used

   d. Twelve indicating lamps

   e. Two contactors of each size furnished

   f. Two overload relays of each size furnished

2. Package spare parts in suitable containers bearing labels clearly indicating the contents and equipment with which they are to be used. Deliver spare parts at the same time as the motor control centers.

G. Product and Manufacturer:

1. Schneider/Square D.

PART 3 - EXECUTION

3.1 INSTALLATION

A. Install at locations shown on the Drawings. Install support channels in concrete per manufacturer's recommendations.

B. For installations against masonry walls, provide an insulation board, 1/4 inch minimum thickness aluminum sheathed, between motor control center and wall for corrosion protection. Trim board neatly within outline of unit.

C. Provide no openings in top or side of units not required for conduit.

D. Cable circuits together within enclosures and identify with durable tag secured to cabling twine.

E. Set motor circuit protectors at lowest setting which permits motor starting without nuisance tipping.

F. Field test all motor control center components.

G. Verify that wiring diagrams on inside of door of each compartment reflects the "as-built" circuitry and that the correct overload heater size and motor circuit protector setting are noted.

H. Install and test in conformance with the National Electrical Code.

I. Torque cable connectors to bus bars in accordance with manufacture's requirements. Factory torque connections shall be checked in the field by the Contractor with a torque wrench.

J. Touch-up marred surfaces to match original finish.

K. Adjust circuit breaker and time delay settings to values determined in the coordination study.

3.2 MANUFACTURER'S SERVICES

A factory trained representative shall be provided for installation supervision, startup and test services, and operation and maintenance personnel training services.

*** END OF SECTION ***

SECTION 16476
LOW VOLTAGE CIRCUIT BREAKERS

PART 1 - GENERAL

1.01 SCOPE OF WORK

A. The Contractor shall furnish and install, low voltage circuit breakers, as indicated on the Drawings and specified herein.

1.02 SUBMITTALS

A. Products shall be submitted in accordance with Section 16000, and elsewhere in the Contract Documents, prior to installation.

1.03 QUALITY ASSURANCE

A. The breaker manufacturer's facilities shall be ISO 9001 certified.

PART 2 - PRODUCTS

2.01 GENERAL

A. Circuit breakers shall be as manufactured by Square D, Cutler-Hammer, Allen-Bradley, or equal.

B. Circuit breaker frame, trip, short circuit, and interruption ratings shall be as indicated on the Drawings, except that they shall be coordinated with the ratings of the equipment actually furnished, and shall be modified where necessary to suit the equipment. Circuit breakers to be used in motor control centers shall be as indicated on the Drawings. Where no indication of type is given on the Drawings circuit breakers protecting motors shall be motor circuit protectors, and other circuit breakers shall be molded case type.

C. Circuit breaker for mounting in motor control centers, or for separate mounting shall be of the air-break type, quick-make and quick-break, 600 volt, with number of poles as indicated on the Drawings.

D. Each pole of the circuit breaker shall provide inverse time delay, and instantaneous circuit protection.

E. The breakers shall be operated by a handle, and shall have a switching mechanism that is mechanically trip free from the handle, so that the contacts cannot be held closed against short circuits, and abnormal currents. Tripping due to overload, or short circuit shall be clearly indicated by the handle automatically assuming a position between the manual ON and OFF positions. Latch surfaces shall be ground and polished. Poles shall be constructed so that they open, close, and trip simultaneously.

F. Breakers must be completely enclosed in a molded case. Non-interchangeable trip breakers shall have their covers sealed; interchangeable trip breakers shall have the trip unit sealed to prevent tampering. Ampere ratings shall be clearly visible.

Contacts shall be non-welding silver alloy. Arc extinction must be accomplished by means of arc chutes. The minimum interrupting ratings of the circuit breakers shall be at least equal to the available short circuit current at the line terminals.

G. Circuit breakers shall conform to the applicable requirements of NEMA Standards Publication No. AB1.

H. Molded case circuit breakers shall be ambient temperature compensating that provides inverse time delay overload and instantaneous short circuit protection by means of a thermalmagnetic element. Compensation shall be accomplished by a secondary bi-metal that will allow the breaker to carry rated current between 25 degrees C and 50 degrees C with tripping characteristics that are approximately the same throughout this temperature range.

I. On breakers with interchangeable, thermal, adjustable magnetic trip, the accessibility and position of the adjustment knob shall not be changed from those on the standard breaker.

J. Unless mounted in a switchboard, or panelboard, circuit breakers shall be housed in a NEMA rated enclosure as described elsewhere in these specifications.

K. Provide circuit breakers with shunt trip mechanisms where shown on the Drawings.

PART 3 - EXECUTION

3.01 INSTALLATION

A. Circuit breakers shall be installed as indicated on the Drawings and per manufacturer's instructions.

END OF SECTION

SECTION 16495

AUTOMATIC TRANSFER SWITCH

PART 1 - GENERAL

1.01 SCOPE OF WORK

A. Automatic transfer switch shall be furnished and installed, as indicated on the Drawings, with full load current rating as indicated on the Drawings. The switch shall be capable of switching all classes of load, and shall be rated for continuous duty when installed in a non-ventilated enclosure. Withstand current rating shall be as indicated on the Drawings.

1.02 SUBMITTALS

A. Contractor shall submit shop drawings, manufacturer's data sheets, and a complete wiring diagram detailing all connections to the electrical system in accordance with Section 16000, and other requirements of the Contract Documents.

PART 2 - PRODUCTS

2.01 AUTOMATIC TRANSFER SWITCH

A. The automatic transfer switch shall be of the time delay neutral, open transition, break-before-make type. The automatic transfer switch shall have the following capabilities:
   1. Adjustable time delay for generator start
   2. Adjustable time delay transfer to generator
   3. Adjustable time delay in “off” position
   4. Adjustable time delay re-transfer to normal power
   5. Adjustable time delay for generator stop
   6. The switches shall be capable of transferring successfully in either direction with 70 percent of rated voltage applied to the terminals.

B. The normal and standby contacts shall be positively interlocked mechanically and electrically to prevent simultaneous closing. Main contacts shall be mechanically locked in position in both the normal and standby positions without the use of hooks, latches, or magnets, and shall be silver alloy protected by arcing contacts, with magnetic blowouts on each pole. Parallel main contacts are not acceptable.

C. The transfer switch shall be equipped with a manual operator that is designed to prevent injury to personnel if the electrical operator should become energized during manual transfer.

D. The transfer switch, complete with all accessories, shall be listed by UL under Standard UL-1008.

E. The transfer switch shall be compatible with the standby generator, and shall be supplied with the generator.

F. The transfer switch operation shall be selectable by the Operator. In the Manual mode, the Operator shall be able to transfer the load to the generator using a selector, toggle, or pushbutton switch. In the Automatic mode, the internal logic shall sense loss or presence of utility power, and transfer the load to or from the generator.

2.02 ACCESSORIES

A. The transfer switch shall be equipped with the following:
1. Nominal 0.5 to 5 second time delay to override momentary normal source outages and delay all transfer and generator starting signals.
2. An adjustable time delay with a minimum of 5 minutes for controlled timing of transfer of loads to standby power source to allow for adequate motor shutdown.
3. Field adjustable 0 to 31 minutes time delay to retransfer to normal source with 5 minute unloaded running time of standby plant. A switch shall be provided to bypass this feature with transfer to normal source made manually. Time delay shall be nullified if standby power fails and normal power is available.
4. Differential protection on 3 phases. Dropout and pickup.
5. Test switch.
6. Auxiliary contacts which close in normal position. Two sets of Form C contacts shall be provided.
7. Auxiliary contacts which close in standby position. Two sets of Form C contacts shall be provided.
8. Pilot lights: indicating normal and standby switch position.
9. Manual and automatic selector switch.
10. Manual and automatic pilot lights with push-to-test.

PART 3 - EXECUTION

3.01 INSTALLATION

A. Transfer switch shall be installed, in accordance with the manufacturer's recommendations.

3.02 INSTALLATION TESTING

A. When conducting temperature rise tests in accordance with UL-1008, the manufacturer shall include post-endurance temperature rise tests to verify the ability of the switches to carry full rated current after completing the overload and endurance tests.

B. On completion of the installation, start-up shall be performed by a factory-trained service representative in the presence of the Owner and the Engineer.

*** END OF SECTION ***

SECTION 16920

ELECTRICAL ACCEPTANCE TESTING

PART 1 - GENERAL

1.01 SUMMARY

A. Section Includes

1. Requirements for electrical acceptance testing of electrical equipment and materials.

2. It is the intent of the tests described herein to assure that all electrical equipment is operational and within industry and manufacturer's tolerances and is installed in accordance with design specifications.

3. Acceptance testing performed by equipment vendors at the point of manufacturer must conform to all requirements of this specification. Testing performed at the point of manufacture which conforms to generally accepted industry practices is also acceptable so long as adequate test result documentation is provided.

B. Scope

1. The CONTRACTOR shall furnish the labor and equipment to perform the testing described herein; testing shall be accomplished in the presence of the OWNER's representative. All of the Acceptance Tests are required to be performed whether they are described in this Section or other applicable Sections. At a minimum, the following electrical systems are to be tested:

    a. Feeders

    b. Transfer Switches, Manual and Automatic

    c. Grounding and Bonding System

    d. Lighting Fixtures and associated controls

    e. Other systems as listed under Part 3 of this specification

2. The project will be subject to continual inspection during construction, but particular attention will be placed on wire terminators, identification, setting of overload devices, cleanup, and record drawings.

C. Related Documents

1. Drawings and general provisions of the contract, including General and Supplementary Conditions and other Division 1 Specification sections, apply to the work of this section.

2. All work performed under this Section of the work is subject to all requirements contained under Section 16000 “General Electrical Requirements”.

3. All Division 16 specifications for electrical equipment provided for this project that requires electrical acceptance testing.

1.02 REFERENCES

A. NETA ATS – Acceptance Testing Specifications, 2013 Edition

B. California Electrical Code, 2017 Edition

C. NFPA 70 – National Electrical Code, 2017 Edition

D. Incorporated by reference all Codes, Standards, and Specifications referred to in the “APPLICABLE REFERENCES” section of NETA ATS-2013.

1.03 DEFINITIONS

A. NETA InterNational Electrical Testing Association Inc.

B. CEC California Electrical Code

C. NEC National Electrical Code

1.04 SYSTEM DESCRIPTION

A. Conditions

1. Provide all items, articles, materials, operations or methods listed, mentioned or scheduled on drawings and/or herein including all labor, materials, equipment and incidentals necessary and required for Electrical Acceptance Testing.

2. Following established procedures, equipment shall be energized after certification by the testing organization that the installation is satisfactory.

3. Correct or replace any current-carrying circuit, electrical equipment, or system which is defective or grounded and correct all other troubles encountered by these tests. All defects, whether through faulty workmanship or materials furnished, shall be corrected under this Section at the Contractors expense.

1.05 SUBMITTALS

A. Test Report Forms

1. All test reports shall be submitted using NETA or approved similar format and, where appropriate, test forms. Reports shall be legible using permanent ink. Pencil is not acceptable.

2. Provide for engineers review and approval a copy of each test form to be used on the project. No testing shall be started prior to approval of all test forms.

3. All test reports shall include the following information:

    a. Summary/Description of the Project

    b. Description of equipment tested.

    c. Description of the tests.

    d. Test data and analysis of the data indicating whether the equipment passed or failed the test.

4. All test data records shall include the following minimum requirements:

    a. Equipment identification including tag numbers.

    b. Humidity, temperature, and other conditions that may affect the results of the tests and/or calibrations.

    c. Date of inspections, tests, maintenance, and/or calibrations.

    d. Identification of the testing technician and their employer.

    e. Indication of inspections, tests, maintenance, and/or calibrations to be performed and recorded.

    f. Indication of expected results when calibrations are to be performed.

    g. Indication of “as-found” and “as-left” results, as applicable.

    h. Sufficient spaces to allow all results and comments to be indicated..

B. Closeout Submittals

1. Provide one copy each to engineer and owner of all testing reports organized as follows:

    a. Bind report in 3-ring binder(s).

    b. Identify project name, description, testing organizations name, and submittal date on front face and back cover of binder.

    c. Provide all test reports, organized by equipment tag number.

    d. Separate different equipment numbers with colored or numbered tabs.

    e. Provide an index/table of contents.

PART 2 - PRODUCTS

2.01 MATERIALS

A. Any materials provided as part of the testing shall be new, unused, and in manufacturer's original packing.

2.02 TEST INSTRUMENT CALIBRATION

A. Contractor performing the testing shall have a calibration program which assures that all applicable test instruments are maintained within rated accuracy for each test instrument calibrated.

B. Contractor performing the testing shall maintain up-to-date instrument calibration instructions and procedures for each test instrument calibrated.

C. It is preferred that instrument calibration accuracy be directly traceable to the national Institute of Standards and Technology (NIST).

D. Instruments shall be calibrated in accordance with the following frequency schedule:

1. Field instruments: Analog, 12 months maximum. Digital, 12 months maximum

2. Laboratory instruments: 12 months maximum

3. Leased specialty equipment: 12 months maximum.

E. Dated calibration labels shall be visible on all test equipment.

F. Records, which show date and results of instruments calibrated or tested, must be kept up to date.

G. Calibrating standard shall be better accuracy than that of the instrument tested.

PART 3 - EXECUTION

3.01 QUALIFICATIONS

A. It is preferred that the testing organization shall be an independent, third party entity which can function as an unbiased testing authority, professionally independent of the manufacturers, suppliers, and installers of equipment or systems being evaluated. When such testing organization is used, it must meet the following requirements:

1. The testing organization shall be regularly engaged in the testing of electrical equipment, devices, installations, and systems.

2. The testing organization shall use technicians who are regularly employed for testing purposes.

3. The testing organization shall be a member of NETA or be able to prove qualifications equal to or better than required for membership in NETA.

4. Submit appropriate documentation demonstrating that the testing organization meets the requirements listed above.

5. Technicians performing these electrical tests and inspections shall be trained and experienced concerning the apparatus and systems being evaluated. These individuals shall be capable of conducting the tests in a safe manner and with complete knowledge of the hazards involved. They must evaluate the test data and make a judgment on the serviceability of the specific equipment.

6. Technicians shall be certified in accordance with ANSI/NETA ETT-2000, "Standard for Certification of Electrical Testing Personnel". Each on-site crew leader shall hold a current certification, Level III or higher, in electrical testing.

B. Contractor may perform the electrical acceptance testing under the following conditions:

1. Contractor's personnel performing the testing and their testing equipment meets all other requirements of this specification.

2. Written approval is received from engineer after review of testing personnel qualifications. At a minimum, contractor's testing personnel must have specific instruction on the testing instruments, accessories, and tests being performed and must be able to evaluate the test results.

3.02 NOTIFICATION

A. Notify engineer and construction manager at least 2 days prior to testing so that they may be present during testing.

3.03 SAFETY AND PRECAUTIONS

A. Safety practices shall include, but are not limited to, the following requirements:

1. Occupational Safety and Health Act OSHA

2. Accident Prevention Manual for Industrial Operations, National Safety Council, Chapter 4

3. Applicable State and Local safety operating procedures

4. NETA Safety/Accident Prevention Program

5. National Fire Protection Association –NFPA 70E

6. ANSI Z244.1 American National Standards for Personnel Protection

B. All tests shall be performed with apparatus de-energized except where otherwise specifically specified.

C. The testing firm shall have a designated safety representative on the project to supervise operations with respect to safety.

3.04 EQUIPMENT TESTING REQUIREMENTS

A. The intent of this specification is not to duplicate testing performed at the point of manufacture or to impose additional burden on the contractor which does not benefit the project. The intent is to verify that electrical equipment has been securely fastened down, supported, and installed in accordance with the manufacturer's requirements. The intent is also to verify that all electrical connections are correctly torqued, properly aligned, properly insulated, and properly supported and that equipment is clean and ready for operation.

B. Except as noted below or as approved by engineer, test the following equipment and assemblies in full accordance with NETA-ATS 2003.

C. Cables, Low-Voltage, 600 Volt Maximum

1. Perform tests only on cables size #4 AWG and larger.

D. Circuit Breakers, Air, Insulated-Case, Molded-Case

1. Perform visual and mechanical inspections in accordance with NETA for all circuit breakers.

2. Perform electrical tests only on circuit breakers rated 100 amps or higher provided in power distribution and lighting/receptacle panelboards.

3. No testing is required for circuit breakers provided as part of any of the following:

    a. A UL listed control panel.

    b. UL listed factory supplied motor control centers.

    c. Stand-alone combination motor starters.

E. Grounding Systems

F. Rotating Machinery, AC Motors and Generators

1. Motors provided as part of valve actuators do not require testing.

2. Perform visual and mechanical inspections on all motors.

3. Perform rotation tests on all motors.

4. Perform electrical tests only on motors 50 horsepower and larger

5. Constant speed motor pump system, including automatic start-up and shut-down.

6. Remote and local controls of all motors and solenoids. Prior to testing of completed systems, or subsystems, the CONTRACTOR shall adjust soft starts and variable frequency drives.

7. Adjustment of valve limit switches shall be accomplished under the supervision of a representative of the valve manufacturer.

G. Surge Arresters, Low-Voltage Surge Protection Devices

H. Ground fault tripping shall be tested by using a separate calibrated source of ground current.

I. Prior to the final or “green tag” electrical inspection, the CONTRACTOR shall remove all junction box, conduit, switchgear inspection plates, and motor termination box covers. After inspection and approval by the OWNER’s representative the CONTRACTOR shall replace all covers and plates.

J. During the final or “green tag” electrical inspection, the representatives for the CONTRACTOR and/or electrical SUB-CONTRACTOR shall be present and shall make available all working drawings..

3.05 CONSTRUCTION

A. Interface with Other Work

1. Coordinate all testing activities with other disciplines. Retest any equipment disturbed or damaged in any manner after initial testing.

3.06 CLOSEOUT REPORT

A. Provide comprehensive bound test report in accordance with Part 1 of this specification.

*** END OF SECTION ***

THIS PAGE INTENTIONALLY LEFT BLANK

APPENDIX A
CHECKLIST OF LABOR LAW REQUIREMENTS

THIS PAGE INTENTIONALLY LEFT BLANK

CHECKLIST OF LABOR LAW REQUIREMENTS
TO REVIEW AT JOB CONFERENCE MEETINGS

Name (print) _____Date _____

Company _____Project _____

The Federal and State labor law requirements applicable to the contract are composed of, but not limited to, the following:

1. Payment of Prevailing Wage Rates

The contractor to whom the contract is awarded and its subcontractors hired for the public works project are required to pay not less than the specified general prevailing wage rates to all workers employed in the execution of the contract. The contractor is responsible for ascertaining and complying with all current general prevailing wage rates for crafts and any rate changes that occur during the life of the contract. Information on all prevailing wage rates and all rate changes are to be posted at the job site for all workers to view.

2. Apprentices

It is the duty of the contractor and subcontractors to employ registered apprentices on the public works project under Labor Code Section 1777.5.

3. Penalties

There are penalties required for contractor's/subcontractor's failure to pay prevailing wages and for failure to employ apprentices, including forfeitures and debarment under Labor Code Sections 1775; 1776; 1777.1; 1777.7 and 1813.

4. Certified Payroll Reports

Under Labor Code Section 1776, contractors and subcontractors are required to keep accurate payroll records showing the name, address, social security number and work classification of each employee and owner performing work; also the straight time and overtime hours worked each day and each week, the fringe benefits, and, the actual per diem wage paid to each owner, journey person, apprentice worker or other employee hired in connection with the public works project. Employee payroll records shall be certified and shall be made available for inspection at all reasonable hours at the principal office of the contractor/subcontractor, or shall be furnished to any employee, or his/her authorized representative on request, pursuant to Labor Code Section 1776. Each contractor and subcontractor shall submit its weekly certified payroll reports to the LCR from the agency no less than weekly or within ten days of request. In the event that there has been no work performed during a given week, the certified payroll report shall be annotated: "No work" for that week. Under Labor Code Section 1776(h) there are penalties required for contractor's/ subcontractor's failure to maintain and submit copies of certified payroll records on request. **For projects bidding after April 1, all contractors will need to upload their certified payroll to the Department of Labor Standards Enforcement website. Effective Jan. 1, 2016, ALL projects will require contractors to upload all certified payroll. This requirement is in addition to the request for payrolls by the City of Redlands;

5. Nondiscrimination in Employment

There exist prohibitions against employment discrimination under Labor Code Sections 1735 and 1777.6, the Government Code, the Public Contracts Code, and Title VII of the Civil Rights Act of 1964.

6. Kickbacks Prohibited

Contractors and subcontractors are prohibited from recapturing wages illegally or extracting "kickbacks" from employee wages under Labor Code Section 1778.

7. Acceptance of Fees Prohibited

There exists a prohibition against contractor/subcontractor acceptance of fees for registering any person for public work under Labor Code Section 1779; or for filling work orders on public works contracts pursuant to Labor Code Section 1780.

8. Listing of Subcontractors

All prime contractors are required to list properly all subcontractors hired to perform work on the public works projects covering more than one-half of one percent, pursuant to Government Code 4100 et seq.

9. Properly Licensed and Registered

Contractors are required to be licensed properly and to require that all subcontractors be properly licensed. Penalties are required for employing workers while unlicensed under Labor Code Section 1021 and under the California Contractor License Law found at Business and Professions Code Section 7000 et seq. Contractors and subcontractors are also required to be registered with the Division of Labor Standards Enforcement to work on public works projects in California. Requirements for registration and penalties for not being registered are found in Labor Code 1773.3.

10. Unfair Competition Prohibited

Contractors and subcontractors are prohibited from engaging in unfair competition as specified under Business and Professions Code Sections 17200 to 17208.

11. Workers Compensation Insurance

Labor Code 1861 requires contractors and subcontractors be insured properly for workers compensation.

12. OSHA

Contractors and subcontractors are required to abide by the Occupational, Safety and Health laws and regulations that apply to the particular construction project.

13. Undocumented Workers

Contractors and subcontractors are prohibited by the Federal government against hiring undocumented workers, and must secure proof of eligibility/citizenship from all workers.

14. Itemized Wage Statements

Contractors and subcontractors must provide itemized wage statements to employees per Labor Code 226.

In accordance with Federal and State laws and with the awarding agency contract documents, the undersigned prime contractor wishes to assure the City of Redlands that it intends to comply with the above-referenced labor law requirements, fully understanding that failure to comply with the above requirements may subject it to penalties as provided above.

Contractor	**City of Redlands**
_____	_____
Name Printed	Name Printed
_____	_____
Signature	Signature
_____	_____
Title	Title
_____	_____
Date	Date

IMPORTANT NOTICE

New Requirements for Contractors Working on California Public Works / Prevailing Wage Projects

Significant changes in prevailing wage law have recently been made that affect all contractors working on Public Works Projects within California. Please note the following important information:

CONTRACTOR REGISTRATION REQUIREMENT

By April 1, 2015, all contractors must be registered with the Division of Labor Standards Enforcement (DLSE) to work on public works projects in California.

WHO must register?
All contractors and subcontractors working on public works projects in California must be registered. This includes prime contractors, subcontractors and sole owner/operators- everyone performing labor on a public works project.

WHEN is registration required?
Contractors must be registered with the DLSE to bid on all public works projects that bid after March 1, 2015. All contractors working on public works projects must be registered by April 1, 2015. Registration is valid until June 30 of each year and may be renewed annually. Registrations are currently being accepted.

WHERE do I register?
Registration is done online at:
https://efiling.dir.ca.gov/PWCR/ActionServlet?action=displayPWCRegistrationForm

HOW MUCH is the fee?
Contractor registration fee is currently set at $300 but may increase each year. This fee shall be paid during the initial registration and each annual renewal.

DO I qualify for registration?
Contractors will need to meet minimum qualification standards to be registered. These include:

- Be properly licensed with the Contractors State License Board for your trade.
- Provide evidence of workers compensation insurance (if applicable).
- Be in good standing (Have no outstanding liabilities for wages, damages, penalties due to an employee or the State, may not be under State or Federal debarment).

WHAT happens if I don't register?
Unregistered contractors working on or bidding for public works projects will be subject to an immediate $2,000 fine and the $300 registration fee to continue working on the project. Unregistered contractors may be removed from the project by the Awarding Agency. Contractors found working on public works projects without being registered also risk not being approved for registration by DLSE.

ELECTRONIC CERTIFIED PAYROLL REPORTING REQUIREMENTS

Prevailing wage law has been changed to require contractors to submit certified payrolls electronically to the DLSE.

WHO is required to submit certified payrolls?
All contractors, subcontractors and sole owner/operators will be required to submit certified payrolls electronically to the DLSE.

WHEN do I need to submit certified payrolls electronically?
If your project is awarded after April 1, 2015, electronic payroll submission is required immediately. Otherwise, electronic payroll submission will be required for all projects awarded on or after January 1, 2016.

WHERE do I submit my certified payrolls?
For now, certified payrolls can be submitted by contractors to the DLSE at: https://apps.dir.ca.gov/ecpr/DAS/AltLogin This website address will change when the DLSE implements their online electronic database system which still has not been developed. Alliant will notify contractors when this system is available.

DO I still need to submit hard copy certified payrolls?
The City of Redlands will still require hard copy submission of certified payroll reports per your contract. The requirement to submit certified payrolls electronically to the DLSE does not replace the requirement for contractors to submit payrolls to the City of Redlands.

Contact the City of Redlands regarding any questions you may have regarding the new requirements for contractor registration or online submission of certified payroll: (909) 798-7698.

PUBLIC WORKS CONTRACT AWARD INFORMATION (DAS-140)

This is not a request for dispatch of apprentices.

Contract award information must be sent to your Apprenticeship Committee if you are approved to train. If you are not approved to train, you must send the information (which may be this form) to ALL applicable Apprenticeship Committees in your craft or trade in the area of the site of the public work. Go to: **http://www.dir.ca.gov/das/PublicWorksForms.htm** for information about programs in your area and trade. The information shall be provided to the applicable apprenticeship committee within ten (10) days of the date of the execution of the prime contract or subcontract, but in no event later than the first day in which the contractor has workers employed upon the public work.

Do not send this form to the Division of Apprenticeship Standards.

NAME OF YOUR COMPANY	CONTRACTORS STATE LICENSE NO.
MAILING ADDRESS-NUMBER & STREET, CITY, ZIP CODE	AREA CODE & TELEPHONE NO.
NAME AND ADDRESS OF PUBLIC WORKS PROJECT	DATE YOUR CONTRACT WAS EXECUTED
	DATE OF EXPECTED/ACTUAL START OF PROJECT
NAME & ADDRESS OF PUBLIC AGENCY AWARDING CONTRACT	ESTIMATED NUMBER OF JOURNEYMAN HOURS
	OCCUPATION OF APPRENTICE
THIS FORM IS BEING SENT TO: (NAME AND ADDRESS OF APPRENTICESHIP PROGRAM(S)	ESTIMATED NUMBER OF APPRENTICE HOURS
	APPROXIMATE/ACTUAL DATES TO BE EMPLOYED

This is not a request for dispatch of apprentices.

Contractors must make a separate request for actual dispatch, in accordance with Section 230.1(a) California Code of Regulations

Check One of the Boxes Below

1. ☐ We are already approved to train apprentices by the _____ Apprenticeship Committee. We will employ and train under their standards. (Enter name of Committee)

2. ☐ We will comply with the standards of _____ Apprenticeship Committee for the duration of this job only. (Enter name of Committee)

3. ☐ We will employ and train apprentices in accordance with the California Apprenticeship Council regulations, including § 230.1 (c) which requires that apprentices employed on public projects can only be assigned to perform work of the craft or trade to which the apprentice is registered and that the apprentices must at all times work with or under the direct supervision of journeyman/men.

_____
Signature Date

_____
Typed Name

_____
Title

DAS-140 FORM - PUBLIC WORKS CONTRACT AWARD INFORMATION

(Title 8, California Code of Regulations, Section 230)
(California Labor Code, Section 1777.5 (e))

SUBMIT CONTRACT AWARD INFORMATION

Prior to commencing work on a contract for Public Works **every** Contractor shall provide contract award information to the apprenticeship committee for each applicable apprenticeable craft or trade in the area of the site of the public works project that has approved the contractor to train apprentices. Contractors who are not already approved to train by an apprenticeship program sponsor shall provide contract award information to **all** of the applicable apprenticeship committees whose geographic area of operation includes the area of the public works project. This contract award information shall be in writing on a DAS Form 140, Public Works Contract Award Information or a letter which includes the following information:

(1) Contractor's name, address, telephone number and state license number;
(2) The full name and address of the public work awarding agency;
(3) The exact location of the public work site;
(4) Date of the contract award;
(5) Expected start date of the work;
(6) Estimated journeyman hours;
(7) Occupation of Apprentice;
(8) Approximate number of apprentices to be employed; and
(9) Approximate dates apprentices will be employed.

This information shall be provided to the applicable apprenticeship committee within ten (10) days of the date of the execution of the prime contract or subcontract, but in no event later than the first day in which the contractor has workers employed upon the public work.
Failure to provide contract award information, which is known by the awarded contractor, shall be deemed to be a continuing violation for the duration of the contract, ending when a Notice of Completion is filed by the Awarding Body, for the purpose of determining the accrual of penalties under Labor Code Section 1777.7.

THE TOP SECTION OF THE FORM COMPLETELY FILLED OUT will provide the information required pursuant to California Labor Code Section 1777.5 and California Code of Regulations Section 230.1.

LOWER SECTION OF THE FORM Check an appropriate box (#1, 2 or 3) for your status.

In addition to the "ORIGINAL(S)" mailed to all applicable Apprenticeship Committees, a copy of this information shall also be submitted to the City of Redlands.

NOTE: The filing of a DAS 140 is not a request for the dispatch of registered apprentices

CONTRACTOR FRINGE BENEFIT STATEMENT

Project Name:	**Project Location:**	**Today's Date:**
Contractor / Subcontractor Name:	**Business Address:**	

In order that the proper Fringe Benefit rates can be verified when checking payrolls on the above contract, the hourly rates for fringe benefits, subsistence and/or travel allowance payment made for employees by the employer on the various classes of work are tabulated below. **Please Include Apprentice Rates.**

Classification:		**Effective Date:**	**Subsistence or Travel Pay:** $_____
EMPLOYER PAID FRINGE BENEFITS	**Health & Welfare** $_____ hr	**Paid To:** **Name of Plan/Fund/Program:** **Address:**	_____ _____
	Pension $_____ hr	**Paid To:** **Name of Plan/Fund/Program:** **Address:**	_____ _____
	Vacation/Holiday $_____ hr	**Paid To:** **Name of Plan/Fund/Program:** **Address:**	_____ _____
	Training $_____ hr	**Paid To:** **Name of Plan/Fund/Program:** **Address:**	_____ _____
	Other $_____ hr	**Paid To:** **Name of Plan/Fund/Program:** **Address:**	_____ _____

Classification:		**Effective Date:**	**Subsistence or Travel Pay:** $_____
EMPLOYER PAID FRINGE BENEFITS	**Health & Welfare** $_____ hr	**Paid To:** **Name of Plan/Fund/Program:** **Address:**	_____ _____
	Pension $_____ hr	**Paid To:** **Name of Plan/Fund/Program:** **Address:**	_____ _____
	Vacation/Holiday $_____ hr	**Paid To:** **Name of Plan/Fund/Program:** **Address:**	_____ _____
	Training $_____ hr	**Paid To:** **Name of Plan/Fund/Program:** **Address:**	_____ _____
	Other $_____ hr	**Paid To:** **Name of Plan/Fund/Program:** **Address:**	_____ _____

Supplemental statements must be submitted during the progress of the work should there be an increase or change in rates. Use additional sheets as necessary. (Attach a copy of your most recent premium transmittal (including copy of check submitted) into each of the above plans/funds/programs or a letter from the above plans/funds/programs reflecting current payment status).

I certify under penalty of perjury that fringe benefits are paid to the approved plans, funds or programs as listed above.

Print Name and Title	**Signature and Date (Wet Signature Required)**

Redlands Regular Meeting of 03-03-2026

California
Department of
Industrial Relations

PUBLIC WORKS PAYROLL REPORTING FORM

NAME OF CONTRACTOR:
OR SUBCONTRACTOR:

CONTRACTOR'S LICENSE NO.:
SPECIALITY LICENSE NO.:

ADDRESS:

PAYROLL NO.:

FOR WEEK ENDING:

SELF-INSURED CERTIFICATE NO.:
WORKERS' COMPENSATION POLICY NO.:

PROJECT OR CONTRACT NO.:
PROJECT AND LOCATION:

(1) NAME, ADDRESS AND SOCIAL SECURITY NUMBER OF EMPLOYEE	(2) NO. OF WITH-HOLDING EXEMPTIONS	(3) WORK CLASSIFICATION	(4) DAY	M	T	W	TH	F	S	S	(5) TOTAL HOURS	(6) HOURLY RATE OF PAY	(7) GROSS AMOUNT EARNED		(8) DEDUCTIONS, CONTRIBUTIONS AND PAYMENTS							(9) NET WGS PAID FOR WEEK	(9) CHECK NO.
				DATE																			
				HOURS WORKED EACH DAY																			
			S										THIS PROJECT	ALL PROJECTS	FED. TAX	FICA (SOC. SEC.)	STATE TAX	SDI	VAC/ HOLIDAY	HEALTH & WELF.	PENSION		
			O												TRAING.	FUND ADMIN	DUES	TRAV/ SUBS.	SAVINGS	OTHER*	TOTAL DEDUC-TIONS		
			S										THIS PROJECT	ALL PROJECTS	FED. TAX	FICA (SOC. SEC.)	STATE TAX	SDI	VAC/ HOLIDAY	HEALTH & WELF.	PENSION		
			O												TRAING.	FUND ADMIN	DUES	TRAV/ SUBS.	SAVINGS	OTHER*	TOTAL DEDUC-TIONS		
			S										THIS PROJECT	ALL PROJECTS	FED. TAX	FICA (SOC. SEC.)	STATE TAX	SDI	VAC/ HOLIDAY	HEALTH & WELF.	PENSION		
			O												TRAING.	FUND ADMIN	DUES	TRAV/ SUBS.	SAVINGS	OTHER*	TOTAL DEDUC-TIONS		
			S										THIS PROJECT	ALL PROJECTS	FED. TAX	FICA (SOC. SEC.)	STATE TAX	SDI	VAC/ HOLIDAY	HEALTH & WELF.	PENSION		
			O												TRAING.	FUND ADMIN	DUES	TRAV/ SUBS.	SAVINGS	OTHER*	TOTAL DEDUC-TIONS		

S = STRAIGHT TIME
O = OVERTIME
SDI = STATE DISABILITY INSURANCE

*OTHER – Any other deductions, contributions and/or payments whether or not included or required by prevailing wage determinations must be separately listed. Use extra sheet(s) if necessary

CERTIFICATION **MUST** be completed
(See reverse side)

622 of 1455

Statement of Compliance

Date:_____

I _____, the undersigned, am the _____ with the authority to act for and on
(Print Name) (Position in Business)
behalf of _____ certify under penalty of perjury that the records commencing on _____ and ending on _____ submitted herein and consisting of ____ pages are the originals, full and corrected documents, which depict the payroll record(s) of actual disbursements by way of cash, check, or whatever form to the individual or individuals names,

(1) That this employer has complied with the requirements of the California Labor Code Sections. 1771, 1811, and 1815 for all performed on this public works project, and that the classifications set forth therein for each trade rate conform with the work Performed.
(2) That any apprentices employed in the above period are duly registered to a bona fide apprenticeship program registered with the State of California's Division of Apprenticeship Standards.

PAYROLL/OTHER DEDUCTIONS

1. I herein certify the *full* and complete Prevailing Wages were paid as currently published and posted by the Director of Industrial Relations, State of California and only deductions as authorized under the laws of the State *of* California or the laws of United States of America have been made from these sums.
2. All other deductions are clearly listed for each employee on an attachment as required by the Director of Industrial Relations, State of California.

OPTIONAL BENEFIT PLANS

I herein certify that all employee deductions for benefit plans are authorized and the employee(s) are signed up for the plan(s) and are receiving the benefit(s) of the plan(s) listed.

☐ WHERE FRINGE BENEFITS ARE PAID TO APPROVED PLANS, FUNDS, OR PROGRAMS
In addition to the basic hourly wage rates paid to each laborer or mechanic listed in the above payroll, payment of fringe benefits as listed in the contract have or will be made to the appropriate programs for the benefit of such employees, except as noted below.

☐ WHERE FRINGE BENEFITS ARE PAID IN CASH
Each laborer or mechanic listed in the above payroll has been paid as indicated on the payroll, an amount not less the sum of the applicable basic hourly rate plus the amount of the required fringe benefits as listed in the determination for the craft, except as noted below,

Exception(s)

Craft	Explanation
Craft	Explanation
Craft	Explanation

Remarks

I herein certify under the penalty of perjury all of the above is true and correct as submitted.

Name **Signature**

Date **Payroll #**

CONTRACTOR INFORMATION SHEET

Job Name: _____ Category: _____

Prime Contractor: _____

Subcontractor: _____ License#: _____

Address: _____

Phone #: _____ Payroll Report Contact: _____

Email Address: _____

Fax #: _____ Contract Amount: _____

Estimated Start Date: _____ Estimated End Date: _____

ANTICIPATED TRADES/CLASSIFICATIONS:

_____ _____

_____ _____

_____ _____

SUB-CONTRACTORS (if applicable)

Name: License #: Phone/ Fax #: Contact:

_____

_____

_____

2N

APPENDIX B
CITY OF REDLANDS
CONSTRUCTION WORKDAY CALENDAR

THIS PAGE INTENTIONALLY LEFT BLANK

CITY OF REDLANDS

MUNICIPAL UTILITIES AND ENGINEERING DEPARTMENT

2026

APPENDIX B

CONSTRUCTION WORKDAY CALENDAR

JANUARY

S	M	T	W	T	F	S
				1 1	2 2	3 3
4 4	5 5	6 6	7 7	8 8	9 9	10 10
11 11	12 12	13 13	14 14	15 15	16 16	17 17
18 18	19 19	20 20	21 21	22 22	23 23	24 24
25 25	26 26	27 27	28 28	29 29	30 30	31 31

FEBRUARY

S	M	T	W	T	F	S
1 32	2 33	3 34	4 35	5 36	6 37	7 38
8 39	9 40	10 41	11 42	12 43	13 44	14 45
15 46	16 47	17 48	18 49	19 50	20 51	21 52
22 53	23 54	24 55	25 56	26 57	27 58	28 59

MARCH

S	M	T	W	T	F	S
1 60	2 61	3 62	4 63	5 64	6 65	7 66
8 67	9 68	10 69	11 70	12 71	13 72	14 73
15 74	16 75	17 76	18 77	19 78	20 79	21 80
22 81	23 82	24 83	25 84	26 85	27 86	28 87
29 88	30 89	31 90				

APRIL

S	M	T	W	T	F	S
			1 91	2 92	3 93	4 94
5 95	6 96	7 97	8 98	9 99	10 100	11 101
12 102	13 103	14 104	15 105	16 106	17 107	18 108
19 109	20 110	21 111	22 112	23 113	24 114	25 115
26 116	27 117	28 118	29 119	30 120		

MAY

S	M	T	W	T	F	S
					1 121	2 122
3 123	4 124	5 125	6 126	7 127	8 128	9 129
10 130	11 131	12 132	13 133	14 134	15 135	16 136
17 137	18 138	19 139	20 140	21 141	22 142	23 143
24 144	25 145	26 146	27 147	28 148	29 149	30 150
31 151						

JUNE

S	M	T	W	T	F	S
	1 152	2 153	3 154	4 155	5 156	6 157
7 158	8 159	9 160	10 161	11 162	12 163	13 164
14 165	15 166	16 167	17 168	18 169	19 170	20 171
21 172	22 173	23 174	24 175	25 176	26 177	27 178
28 179	29 180	30 181				

JULY

S	M	T	W	T	F	S
			1 182	2 183	3 184	4 185
5 186	6 187	7 188	8 189	9 190	10 191	11 192
12 193	13 194	14 195	15 196	16 197	17 198	18 199
19 200	20 201	21 202	22 203	23 204	24 205	25 206
26 207	27 208	28 209	29 210	30 211	31 212	

AUGUST

S	M	T	W	T	F	S
						1 213
2 214	3 215	4 216	5 217	6 218	7 219	8 220
9 221	10 222	11 223	12 224	13 225	14 226	15 227
16 228	17 229	18 230	19 231	20 232	21 233	22 234
23 235	24 236	25 237	26 238	27 239	28 240	29 241
30 242	31 243					

SEPTEMBER

S	M	T	W	T	F	S
		1 244	2 245	3 246	4 247	5 248
6 249	7 250	8 251	9 252	10 253	11 254	12 255
13 256	14 257	15 258	16 259	17 260	18 261	19 262
20 263	21 264	22 265	23 266	24 267	25 268	26 269
27 270	28 271	29 272	30 273			

OCTOBER

S	M	T	W	T	F	S
				1 274	2 275	3 276
4 277	5 278	6 279	7 280	8 281	9 282	10 283
11 284	12 285	13 286	14 287	15 288	16 289	17 290
18 291	19 292	20 293	21 294	22 295	23 296	24 297
25 298	26 299	27 300	28 301	29 302	30 303	31 304

NOVEMBER

S	M	T	W	T	F	S
1 305	2 306	3 307	4 308	5 309	6 310	7 311
8 312	9 313	10 314	11 315	12 316	13 317	14 318
15 319	16 320	17 321	18 322	19 323	20 324	21 325
22 326	23 327	24 328	25 329	26 330	27 331	28 332
29 333	30 334					

DECEMBER

S	M	T	W	T	F	S
		1 335	2 336	3 337	4 338	5 339
6 340	7 341	8 342	9 343	10 344	11 345	12 346
13 347	14 348	15 349	16 350	17 351	18 352	19 353
20 354	21 355	22 356	23 357	24 358	25 359	26 360
27 361	28 362	29 363	30 364	31 365		

THIS PAGE INTENTIONALLY LEFT BLANK

APPENDIX C
CITY OF REDLANDS
STANDARD PLAN AMENDMENTS

THIS PAGE INTENTIONALLY LEFT BLANK

STANDARD PLAN AMENDMENTS

The following changes shall be made to the Standard Plans for Public Works Construction:

101-2 ABOVE-GROUND UTILITIES LOCATION IN PARKWAY

Add the following note:

7. Stop sign and Street Name sign posts shall be set 750 mm (2-1/2 feet) behind curb face and 600 mm (2 feet) from BCR/ECR, being a minimum 1,200 mm (4 feet) in advance of the crosswalk line nearest the approaching traffic, unless otherwise approved by the Engineer.
8. If a street light standard is located within the BCR/ECR area described in Note 7, 'Stop' and 'Street Name' signs shall be mounted to the street light standard.
9. Sign post anchor system shall be installed in concrete, unless otherwise approved by the Engineer.

110-2 DRIVEWAY APPROACHES

Amend note 1 as follows:

"... shall be 150 mm (6 inch) thick PCC."

Add the following notes:

6. Commercial driveway approach shall be Type A, unless otherwise approved by the Engineer. Width (W) shall be 3.6 m (12 feet) minimum to 10.7 m (35 feet) maximum.
7. Residential driveway approach shall be Type B, unless otherwise approved by the Engineer. Width (W) shall be 3.6 m (12 feet) minimum to 6.1 m (20 feet) maximum.
8. Alley approach shall be Type C, unless otherwise approved by the Engineer. Width (W) shall be 6.1 m (20 feet).

111-5 CURB RAMP

Amend note 1 as follows:

"... be class 330-C-23 (560-C-3250) conforming to ..."

112-2 CURB AND SIDEWALK JOINTS

Amend the first sentence of note 2 as follows:

"... walks and 3,000 mm (10 feet) in gutters ..."

Add the following notes:

4. Expansion joints shall be placed at the top of all driveway “x”s.
5. Expansion joints shall be spaced at maximum 18.3 m (60 foot) intervals.
6. Sidewalk shall be minimum 100 mm (4 inches) thick.
7. All concrete shall be class 330-C-23 (560-C-3250).

120-2 CURB AND GUTTER - BARRIER

Add the following note:
7. "W" shall be measured from flow line to gutter lip.

Amend note on details A2-6(150) and A2-(8)200) as follows:
Delete - Slope 8.3%
Replace with - Slope 6.25%

121-2 CURB AND GUTTER - MOUNTABLE

Add the following note:
7. "W" shall be measured from flow line to gutter lip.

Amend note on detail B2-6(150) as follows:
Delete - Slope 8.3%
Replace with - Slope 6.25%

122-2 CROSS AND LONGITUDINAL GUTTERS

Add the following notes:
7. 150 mm (6 inch) crushed aggregate base compacted to 95 percent shall be placed under all cross gutter and spandrel areas.
8. Section D-D dimension may be increased to 3,000 mm (10 feet) at the direction of the Engineer.

123-2 CROSS GUTTER AT T INTERSECTIONS

Add the following notes:
5. 150 mm (6 inch) crushed aggregate base compacted to 95 percent shall be placed under all cross gutter and spandrel areas.
6. Section A-A dimension may be increased to 3,000 mm (10 feet) at the direction of the Engineer.

130-2 ALLEY INTERSECTION

Amend note 2 as follows:
Delete - 520-C-2500 (310-C-17)
Replace with - 560-C-3250 (330-C-23)

Add the following notes:
4. Standard alley section shall be as shown on City Detail Drawing No. 118-0.
5. Runoff water shall not be allowed to cross sidewalks or alley approaches. Drains shall be installed as shown on Standard Plan 150-3, Case II Inlet.

133-3 ASPHALT CONCRETE PAVEMENT REPLACEMENT

Delete - Case I - WITHOUT BASE in its entirety.

Delete - Case II - T + 1" (25 mm) MIN
Replace with - T+1" (25 mm) or 3" (75 mm), whichever is greater.
Add the following notes:

4. Minimum trench width shall be not less than 300 mm (12 inches).
5. Backfill lateral utility trenches, full depth, with crushed aggregate base or sand.
6. A 3,600 mm (12 foot) wide overlay may be required by the Engineer when:
   a. Existing pavement is uneven.
   b. Existing pavement is damaged by Contractor's operations. Length of overlay shall be determined by the Engineer.

300-3 CURB OPENING CATCH BASIN

Amend note 4 as follows:
Delete - H = Noted on the plans
Replace with - H = 50 mm (2 inches)

301-3 CURB OPENING CATCH BASIN WITH GRATING(S) AND DEBRIS SKIMMER

Amend note 4 as follows:
Delete - H = Noted on the plans
Replace with - H = 50 mm (2 inches)

302-3 CURB OPENING CATCH BASIN WITH GRATING(S)

Amend note 5 as follows:
Delete - H = Noted on the project plans
Replace with - H = 50 mm (2 inches)

303-3 CURBSIDE GRATING CATCH BASIN

Amend note 5 as follows:
Delete - H = Noted on the plans
Replace with - H = 50 mm (2 inches)

307-3 CURB OPENING CATCH BASIN WITH MANHOLE IN STREET

Amend note 5 as follows:
Delete - H = Noted on the plans
Replace with - H = 50 mm (2 inches)

313-3 LOCAL DEPRESSIONS AT CATCH BASINS

Amend note 5 as follows:
Delete - H, H1, H2 and H3 shall be as noted on the plans
Replace with - H, Hl, H2 and H3 shall be 50 mm (2 inches).

314-3 MODIFICATIONS FOR SIDE OPENING CATCH BASIN

Add the following note:
9. H = 50 mm (2 inches).

324-2 MANHOLE SHAFT WITH ECCENTRIC REDUCER

Amend Collar notes on sheet 1 as follows:
Delete - Class C mortar
Replace with - Class B concrete, plant mixed, 150 mm (6 inch) thick by 300 mm (12 inch) wide, as shown in Detail Drawing No.325-0.

Delete - R = 50 mm (2 in.) shown for the collar in both vertical sections.

326-1 MANHOLE SHAFT 900 mm (36") WITHOUT REDUCER

Amend Collar note on sheet 1 as follows:
Delete - Class C mortar
Replace with - Class B concrete, plant mixed, 150 mm (6 inch) thick by 300 mm (12 inch) wide, as shown in Detail Drawing No.325-0.

518-3 TREE STAKING

Amend Single Staking note 1 as follows:
"... chromated copper arsenate."

Amend Single Staking note 2 as follows:
"... shall be a minimum 2.5 m (8 feet); however, it ..."

Amend Double Staking note 1 as follows:
"... chromated copper arsenate."

Amend Double Staking note 3 as follows:
"Height of stakes shall be a minimum 2.5 m (8 feet); however, they shall not be ..."

520-4 TREE PLANTING

Amend note 3 as follows:
"Amend backfill mix with fertilizer tablets per specifications. Leave ..."\

Delete note 4 in its entirety and replace with:
"Perforated pipes are not required for street trees."
Amend note 5 as follows:
"... high berm a minimum 760 mm (30 inch) diameter around backfill ..."

Add the following sentence to note 8:
"All stakes shall be placed outside of rootball."

Amend note 9 as follows:
"... to stakes with two 50 mm (2 inch) “Cinch Tree Ties” per stake, or approved equal."

Add the following notes:
12. Tree spacing shall be 12 m (40 feet) minimum, and 15 m (50 feet) maximum.
13. Tree planting shall be a minimum 10 m (30 feet) from the BCR on the approach leg to an intersection; a minimum 3 m (10 feet) from the ECR on the departure leg to an intersection.
14. Tree planting shall be a minimum 3 m (10 feet) from the edge of a driveway approach.
15. Tree planting shall be a minimum 5 m (15 feet) from street light standards and power poles.
16. Tree planting shall be a minimum 3 m (10 feet) from fire hydrants.
17. Tree planting shall be a minimum 3 m (10 feet) from house walks and utility meters.
18. Tree planting shall be centered in the parkway between curb and sidewalk.
19. Where there is no sidewalk, tree planting shall be centered between curb & right-of-way line.

Add the following City Detail Drawings to the Standard Plans for Public Works Construction:

102-0 FIRE HYDRANT PAVEMENT MARKER LOCATIONS
117-0 CENTRALIZED MAILBOX CONCRETE ACCESS PAD
118-0 STANDARD ALLEY SECTION
119-0 MEANDERING SIDEWALK
129-0 SPLIT-FACE ROCK CURBING
148-0 STANDARD TRANSITION INTO A SUB-STANDARD SECTION
149-0 STANDARD TERMINUS FOR EXTENDABLE STREET
159-0 CURB OUTLET BOX
325-0 MANHOLE AT GRADE DETAIL
459-1 LIGHTING STANDARD
491-1 REFLECTORIZED STREET NAME SIGN, MAST ARM
492-1 REFLECTORIZED STREET NAME SIGN, 1-A POLE

THIS PAGE INTENTIONALLY LEFT BLANK

TWO LANE STREET

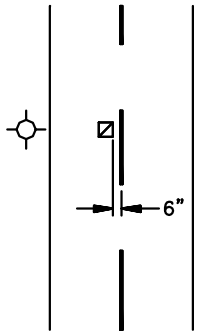

MULTI–LANE STREET

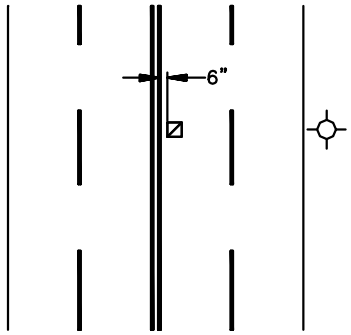

TWO LANE STREET
AT INTERSECTION

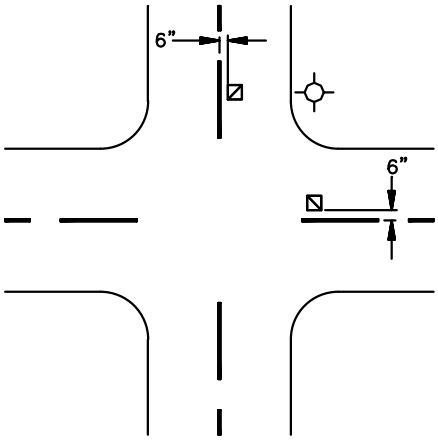

FOUR LANE STREET
WITH TURN LANE
AT INTERSECTION

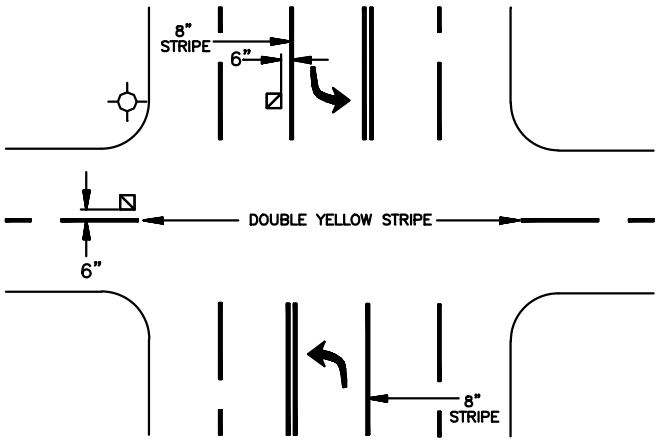

MULTI–LANE STREET
WITH TURN LANE

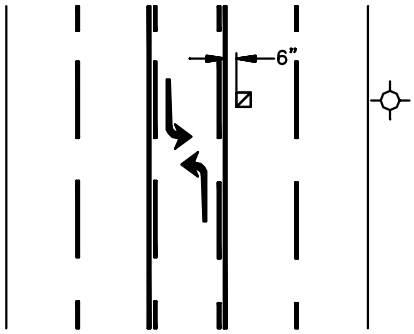

LEGEND

FIRE HYDRANT BLUE PAVEMENT MARKER

NOT TO SCALE

CITY OF REDLANDS MUNICIPAL UTILITIES AND ENGINEERING DEPARTMENT

FIRE HYDRANT PAVEMENT MARKER LOCATIONS

STD. DWG. NUMBER

102-0

APPROVED: _____ DATE: 02/20/2020

Goutam K. Dobey, Engineering Manager RCE 75646

REV. | BY | DATE

SHEET 1 OF 1

THIS PAGE INTENTIONALLY LEFT BLANK

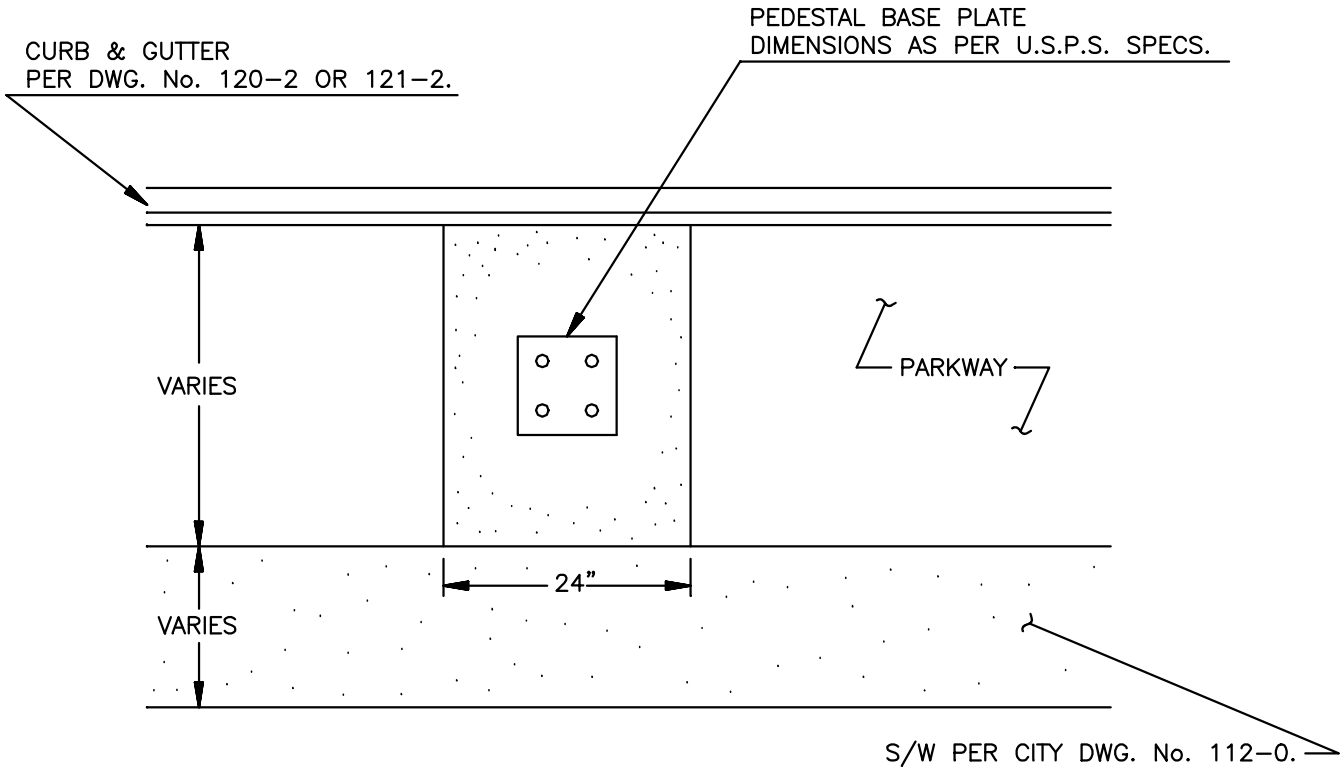

NOTES:

1. CONSTRUCT 24" WIDE BY 4" DEEP CONCRETE ACCESS PAD TO SURROUND U.S.P.S. PEDESTAL.
2. PEDESTAL TO BE INSTALLED AS PER U.S.P.S. SPECS.
3. PAD TO EXTEND COMPLETELY FROM SIDEWALK TO CURB.
4. SLOPE OF PAD TO MATCH THAT OF SIDEWALK.

CITY OF REDLANDS MUNICIPAL UTILITIES AND ENGINEERING DEPARTMENT

REV.	BY	DATE

CENTRALIZED MAILBOX CONCRETE ACCESS PAD

STD. DWG. NUMBER **117-0**

APPROVED: Dobey DATE: 02/20/2020

Goutam K. Dobey, Engineering Manager RCE 75646

SHEET 1 OF 1

THIS PAGE INTENTIONALLY LEFT BLANK

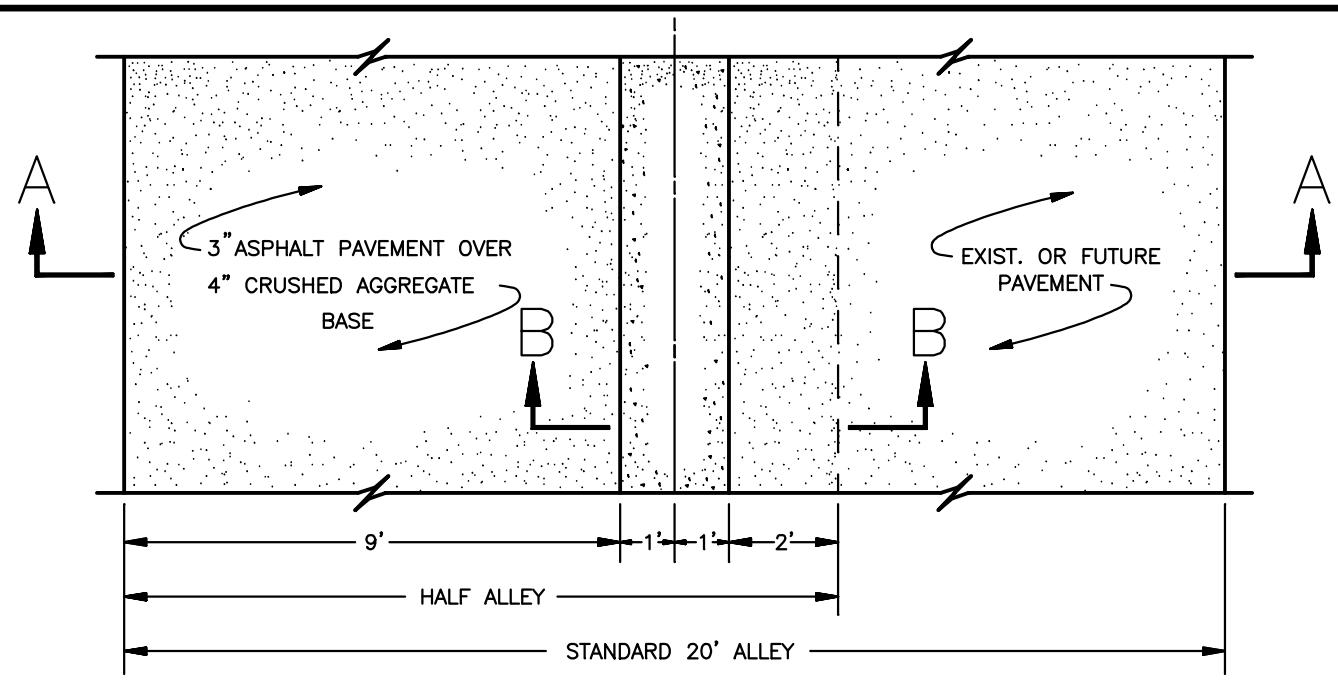

PLAN VIEW

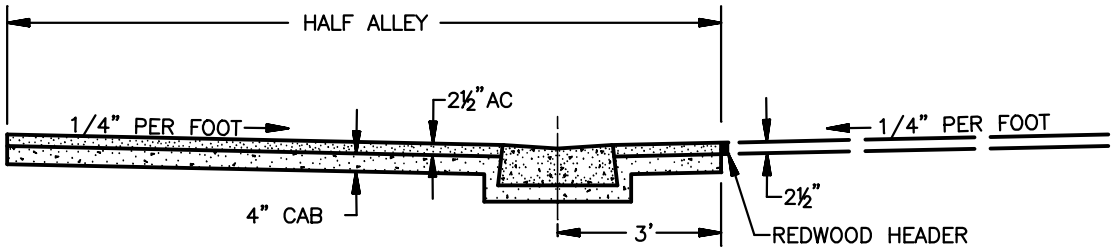

SECTION A–A

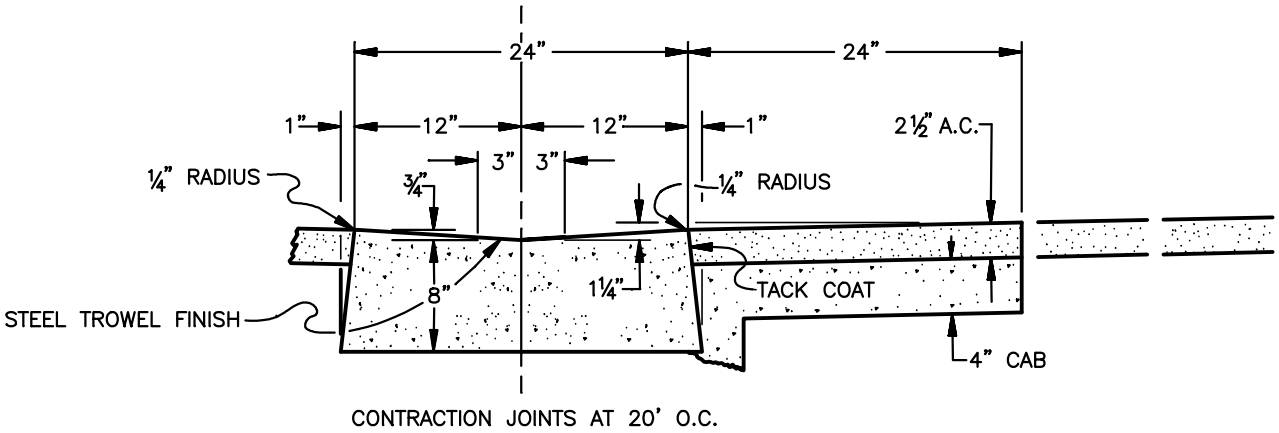

SECTION B–B

CITY OF REDLANDS MUNICIPAL UTILITIES AND ENGINEERING DEPARTMENT

STANDARD ALLEY SECTION

STD. DWG. NUMBER

118-0

APPROVED: Gautam K. Dobey, Engineering Manager RCE 75646

DATE: 02/20/2020

REV. BY DATE

SHEET 1 OF 1

THIS PAGE INTENTIONALLY LEFT BLANK

NOTES:

1. RADII FOR SIDEWALK SHALL BE BETWEEN 200' AND 600' AND SHALL BE STAGGERED.
2. MAXIMUM SIDEWALK SLOPE SHALL NOT EXCEED 10% ON STREETS WITH GRADES LESS THAN 10%.
3. MAXIMUM SIDEWALK SLOPE SHALL NOT EXCEED MAXIMUM STREET GRADE ON STREETS WITH GRADES GREATER THAN 10%.
4. SIDEWALK EASEMENT SHALL BE REQUIRED FOR ANY SIDEWALK EXTENDING BEYOND RIGHT-OF-WAY LINE.
5. BUS STOPS SHALL BE A MINIMUM OF 50' IN LENGTH.
6. SIDEWALK SHALL BE A MINIMUM OF 6' IN WIDTH WHEN ADJACENT TO CURB.
7. SIDEWALK SHALL BE A MINIMUM OF 3' AWAY FROM CURB FACE EXCEPT AT CURB RETURNS AND BUS STOPS.

CITY OF REDLANDS MUNICIPAL UTILITIES AND ENGINEERING DEPARTMENT

MEANDERING SIDEWALK

STD. DWG. NUMBER

119-0

APPROVED: Goutam K. Dobey, Engineering Manager RCE 75646

DATE: 02/20/2020

REV. | BY | DATE

SHEET 1 OF 2

THIS PAGE INTENTIONALLY LEFT BLANK

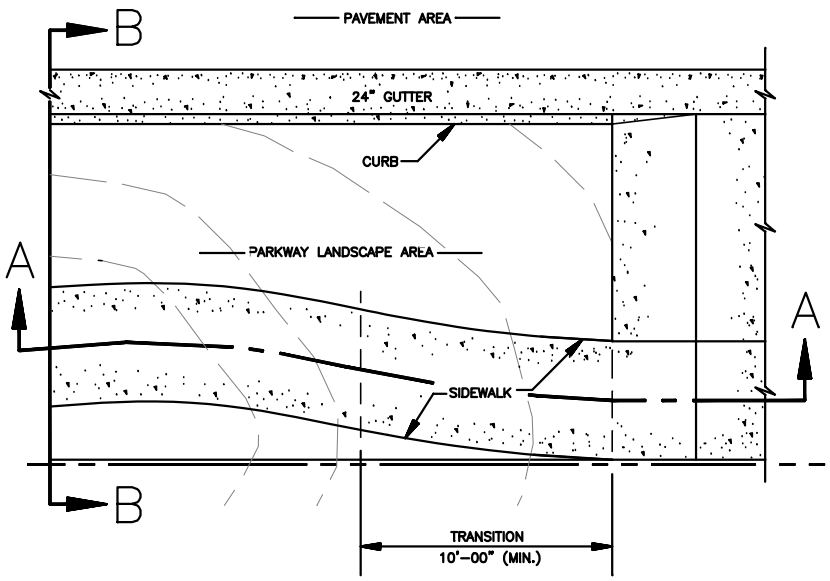

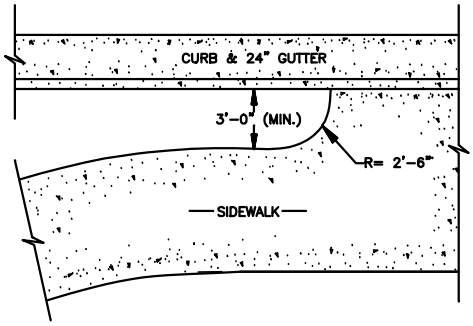

DETAIL A

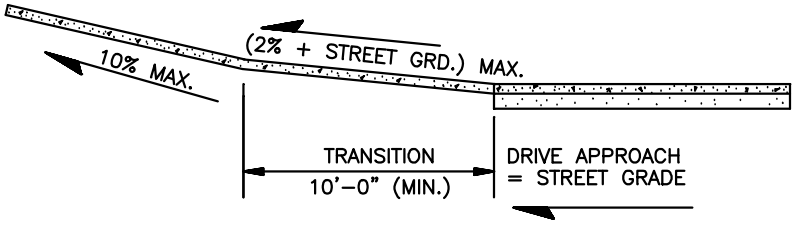

SIDEWALK SECTION A–A

DESIGN NOTES

1. THE SLOPE DIFFERENTIAL BETWEEN THE STREET GRADE AND SIDEWALK TRANSITION SHALL NOT EXCEED 2%.
2. SIDEWALK ADJACENT TO CURBS SHOULD ONLY TAKE PLACE AT STREET INTER–SECTIONS AND DESIGNATED BUS STOPS.
3. ANY SIDEWALK CONSTRUCTED ADJA–CENT TO CURB SHALL BE A MINIMUM OF 6 FEET IN WIDTH.
4. ANY SIDEWALK CONSTRUCTED WITHIN 3 FEET OF CURB FACE SHALL JOIN TO BACK OF CURB.
5. SIDEWALK GRADE BREAKS OF GREATER THAN 3% REQUIRE A MINIMUM 40 FOOT VERTICAL CURVE DESIGN. ALL GRADE BREAKS FROM 0.25% TO 2.99% REQUIRE A MINIMUM 10 FOOT VERTICAL CURVE.

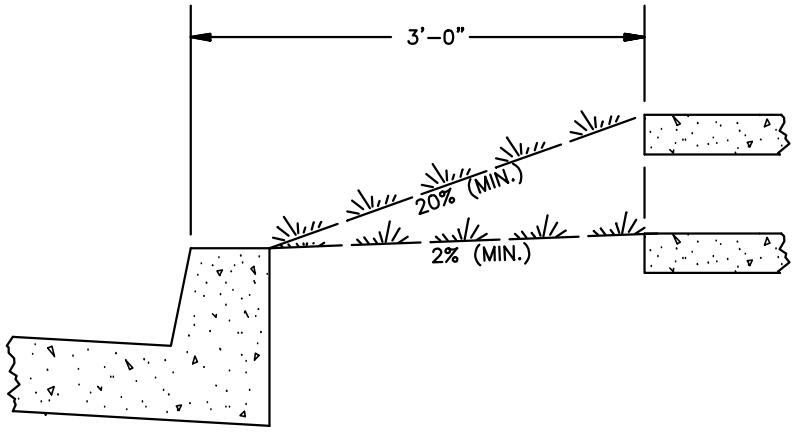

PARKWAY SECTION B–B

CITY OF REDLANDS MUNICIPAL UTILITIES AND ENGINEERING DEPARTMENT

MEANDERING SIDEWALK

STD. DWG. NUMBER **119-0**

APPROVED: Goutam K. Dobey, Engineering Manager RCE 75646

DATE: 02/20/2020

REV. | BY | DATE

SHEET 2 OF 2

THIS PAGE INTENTIONALLY LEFT BLANK

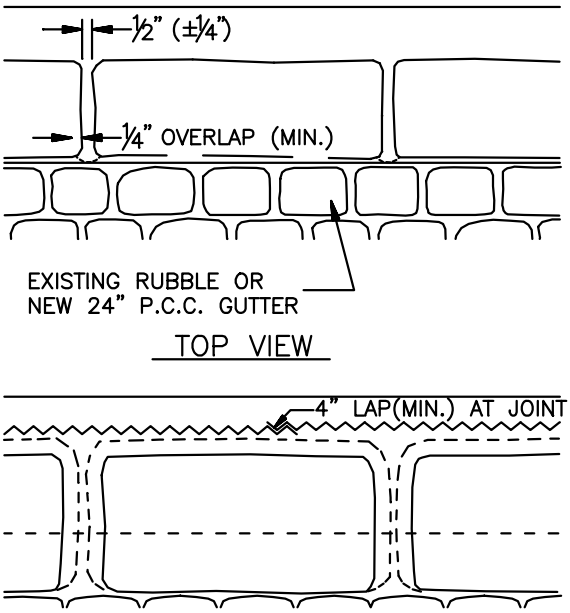

FRONT VIEW

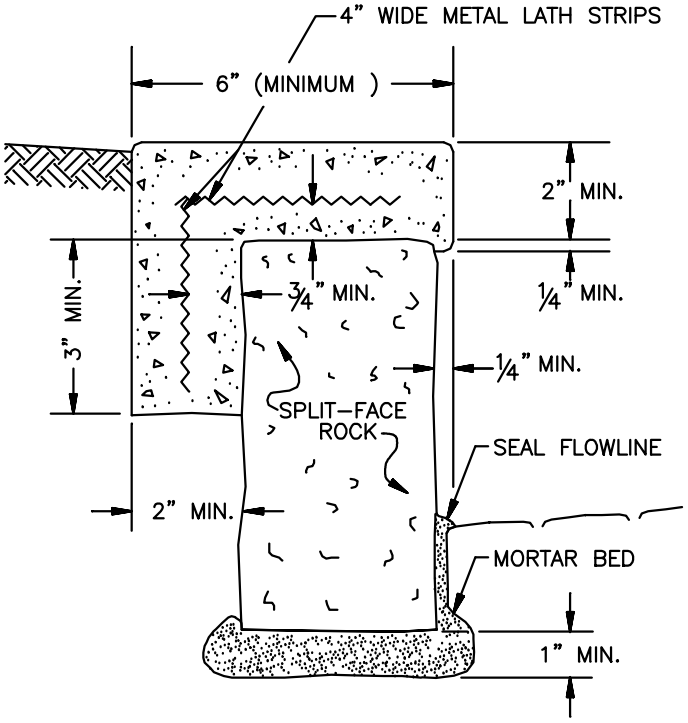

CROSS SECTION OF ROCK CURB

SPECIFICATIONS

1. Description – This work shall consist of placing split–faced rock in cement mortar beds and placing of mortar caps at locations as shown on the plans or as directed by the Engineer and as specified in these specifications and the special provisions.
2. Rock – Rock for use in split–face rock curbs shall be existing split–face rock or new rock as may be required. Rock shall be clean, hard, durable and free from seams and other imperfections. Rock shall be of uniform shape and size. Any new rock used shall be approved by the Engineer prior to use.
3. Mortar – Mortar for bedding and finishing of split–face rock curb shall be class "C" mortar consisting of one part by volume of portland cement to two parts by volume of clean, fine aggregate. Hydrated lime, to the extent of 10% by volume of the cement may be added to the mortar. Hydrated lime shall be treated as an addition and not as replacing any cement. Mortar may be mixed in either a mixing machine or by hand. If mixed by hand, the fine aggregate, cement and lime shall be mixed dry until the mixture assumes uniform color. Water shall then be added at sufficient quantities to produce a mixture workable for the intended use. Mortar shall be used within one hour after water has been added and shall not be retempered.
4. Placing – Rocks shall be thoroughly wetted before placing and shall be laid in full mortar beds in courses approximately horizontal and vertical in both longitudinal and transverse directions as herein defined. Rocks will not be considered to be properly bedded until mortar exudes from the underside of the bedded rock. Mortar caps shall contain 4 inch wide "Strip–Ex" steel lath and shall be placed to the dimensions shown above. Grades for the top of the cap shall comply as follows: When a 10 foot straight edge is placed on top of the finished cap, the surface shall not vary from the edge of the straight edge more than 1/8 inch, except at changes in grade. Grades and changes in grade shall conform to the City of Redlands Standard Specifications. The alignment of the curb shall be set at a uniform perpendicular distance from the centerline of the street as shown on the plans or as defined by the Engineer. No voids in any part of the curb shall be permitted. Dimensions and tolerances for placing of rock shall be as shown above.

CITY OF REDLANDS MUNICIPAL UTILITIES AND ENGINEERING DEPARTMENT

SPLIT-FACE ROCK CURBING

STD. DWG. NUMBER **129-0**

APPROVED: Goutam K. Dobey, Engineering Manager RCE 75646

DATE: 02/20/2020

REV. | BY | DATE

SHEET 1 OF 1

THIS PAGE INTENTIONALLY LEFT BLANK

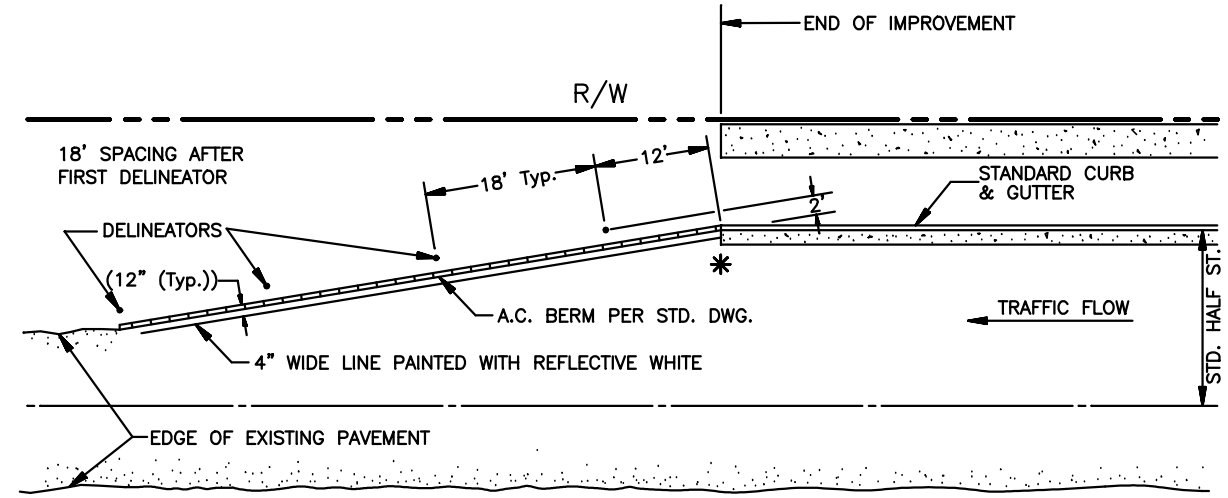

* TRANSITION LENGTH SHALL BE COMPUTED USING THE FORMULA $L=WS^2/60$, WHERE L= LENGTH IN FEET, W= WIDTH OF TRANSITION IN FEET, & S= SPEED IN M.P.H. , WHEN S ≤ 40 M.P.H.

* WHEN S > 40 M.P.H., THE FORMULA L= WS SHALL BE USED.

PLAN VIEW

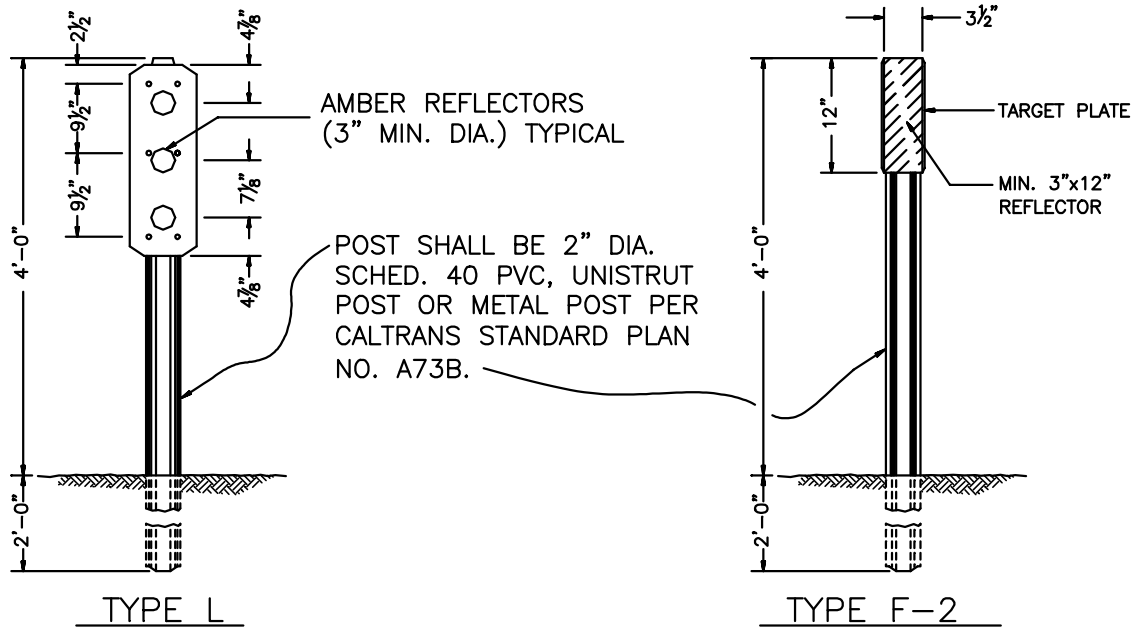

DELINEATOR

CITY OF REDLANDS MUNICIPAL UTILITIES AND ENGINEERING DEPARTMENT

STANDARD TRANSITION INTO A SUB-STANDARD SECTION

STD. DWG. NUMBER **148-0**

APPROVED: Dobey DATE: 02/20/2020

Goutam K. Dobey, Engineering Manager RCE 75646

REV. | BY | DATE

SHEET 1 OF 1

THIS PAGE INTENTIONALLY LEFT BLANK

ADVANCE WARNING SIGNS SHALL BE PLACED AS SPECIFIED BY ENGINEER. TYPE, NUMBER AND LOCATION TO BE DETERMINED DURING DESIGN.

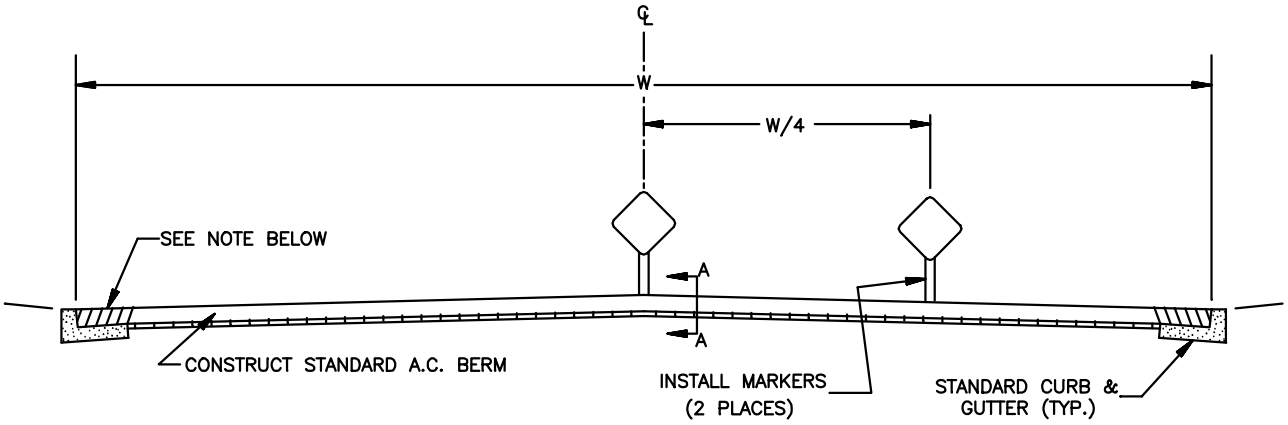

STANDARD STREET SECTION AT P/L

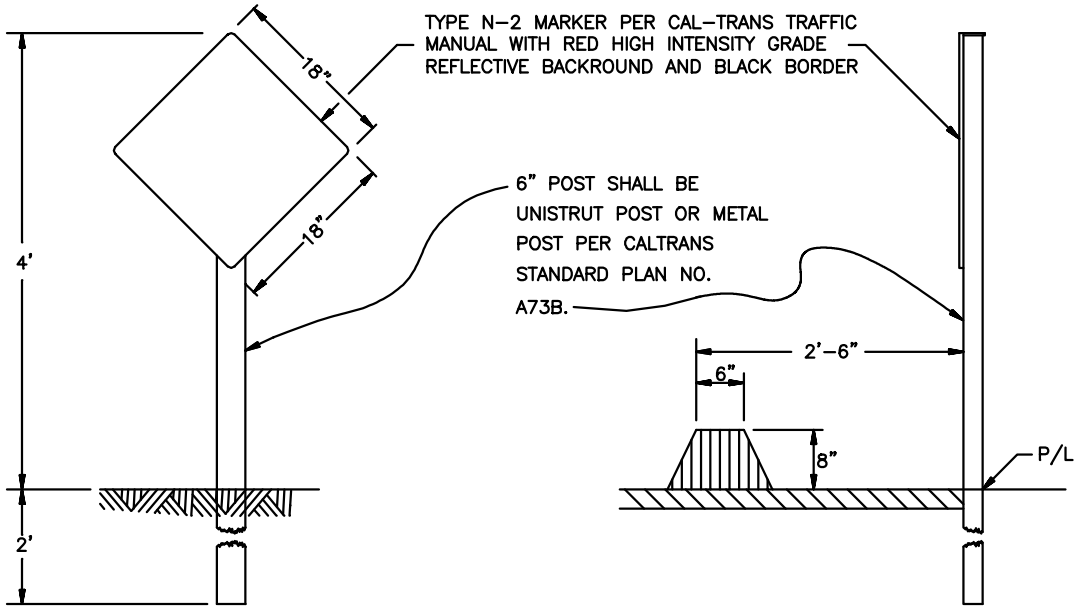

MARKER

SECTION A-A
NO SCALE

NOTE: IF NECESSARY, DEPRESS BERM IN GUTTER AREA TO ALLOW DRAINAGE.

CITY OF REDLANDS MUNICIPAL UTILITIES AND ENGINEERING DEPARTMENT

STANDARD TERMINUS FOR EXTENDABLE STREET

STD. DWG. NUMBER **149-0**

APPROVED: Dobey DATE: 02/20/2020

Goutam K. Dobey, Engineering Manager RCE 75646

REV.	BY	DATE

SHEET 1 OF 1

THIS PAGE INTENTIONALLY LEFT BLANK

PLAN VIEW

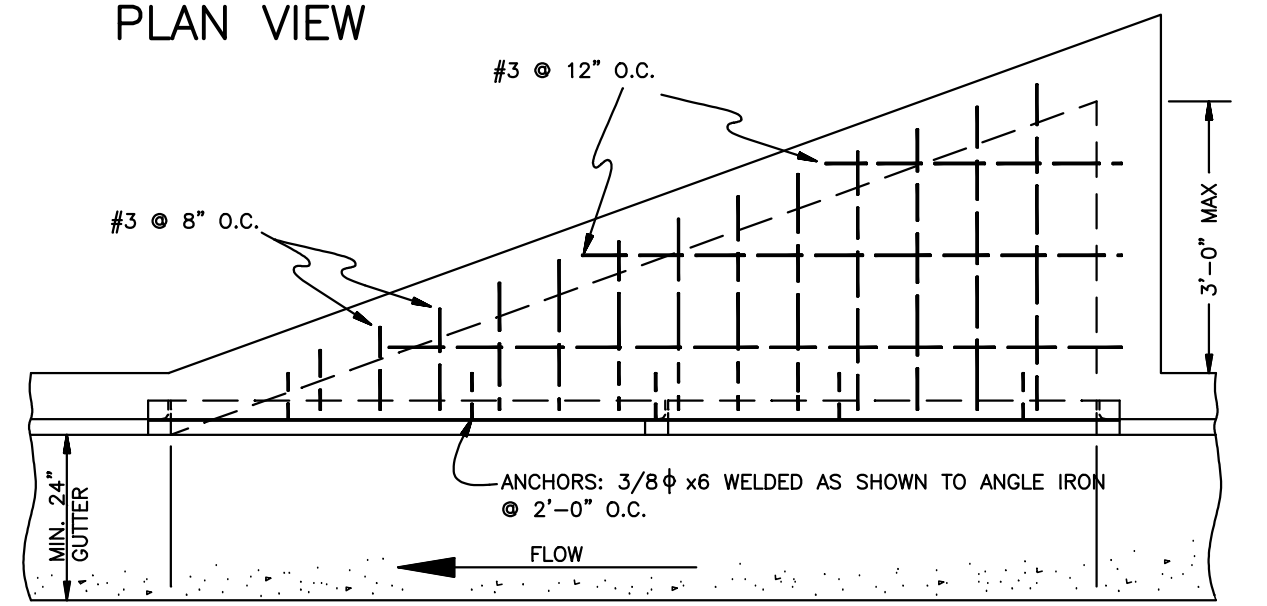

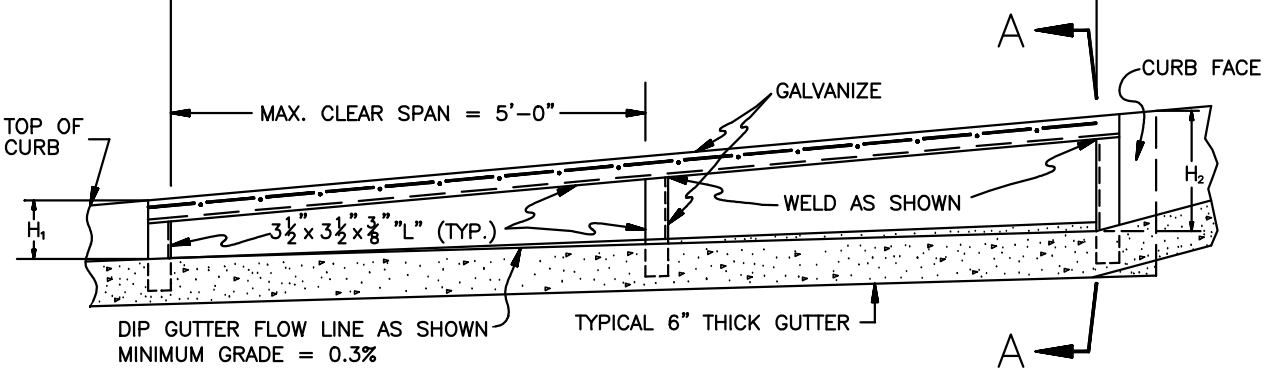

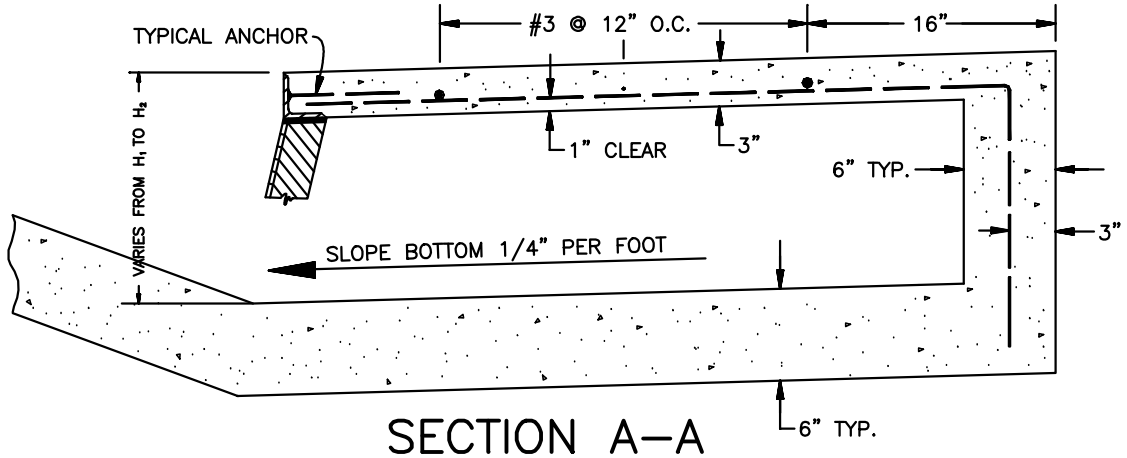

SECTION A–A

NOTE: DIMENSIONS H_1 AND H_2 ARE "AS SHOWN ON PLANS"
CLASS "A" CONCRETE SHALL BE USED.

CITY OF REDLANDS MUNICIPAL UTILITIES AND ENGINEERING DEPARTMENT

CURB OUTLET BOX

STD. DWG. NUMBER
159-0

APPROVED: Gautam K. Dobey, Engineering Manager RCE 75646

DATE: 02/20/2020

REV. | BY | DATE

SHEET 1 OF 1

THIS PAGE INTENTIONALLY LEFT BLANK

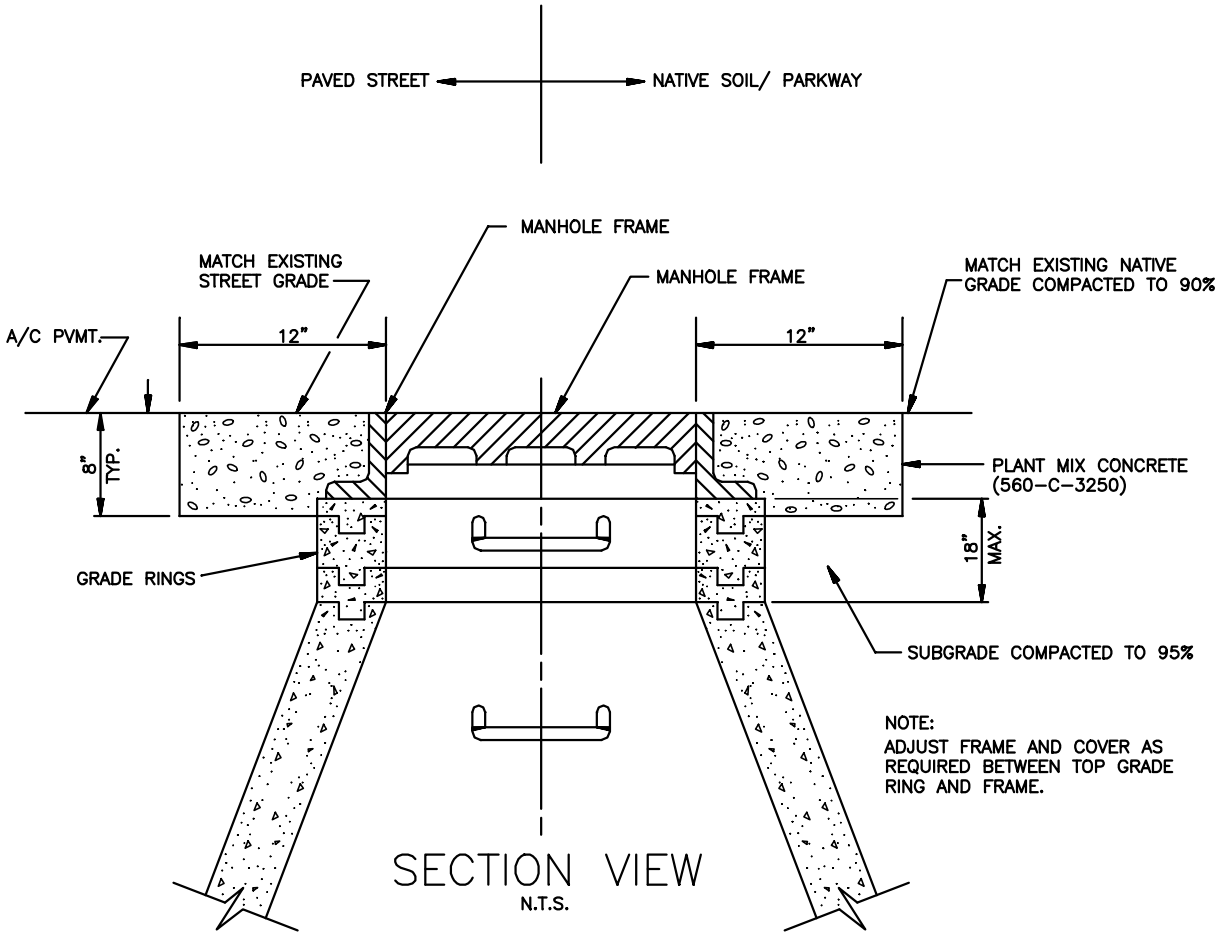

SECTION VIEW
N.T.S.

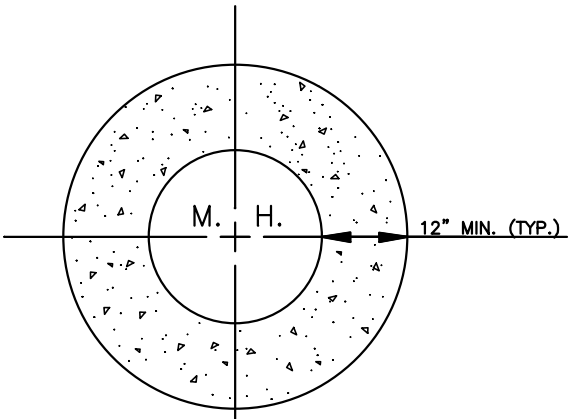

TOP VIEW
N.T.S.

CITY OF REDLANDS MUNICIPAL UTILITIES AND ENGINEERING DEPARTMENT

MANHOLE AT GRADE DETAIL

STD. DWG. NUMBER
325-0

APPROVED: Gautam K. Dobey, Engineering Manager RCE 75646

DATE: 02/20/2020

REV. | BY | DATE

SHEET 1 OF 1

THIS PAGE INTENTIONALLY LEFT BLANK

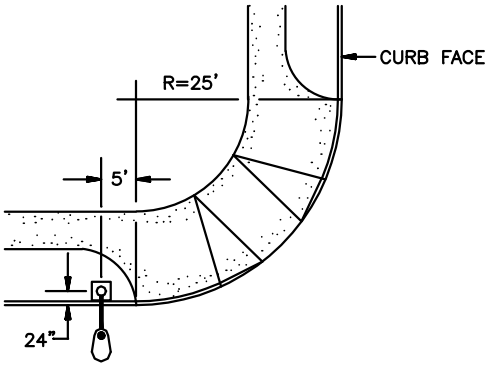

TYPICAL INTERSECTION

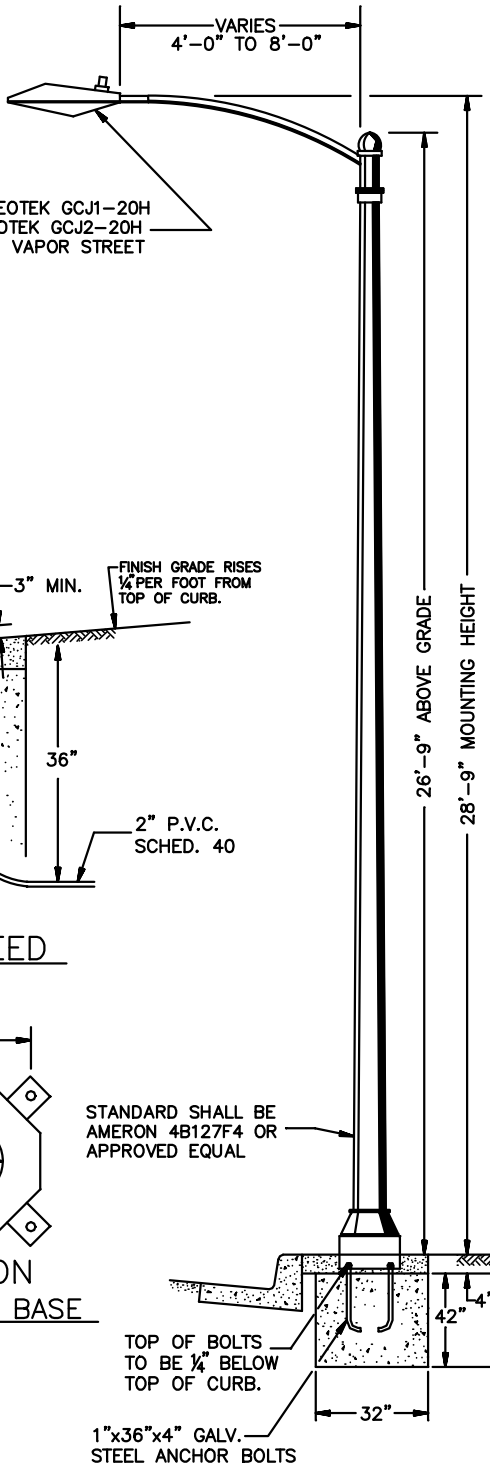

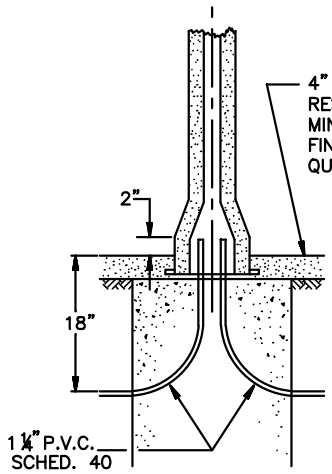

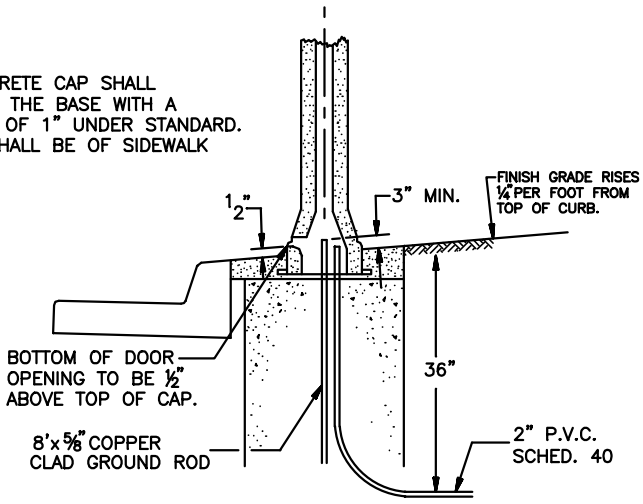

CONDUIT FEED
REAR VIEW

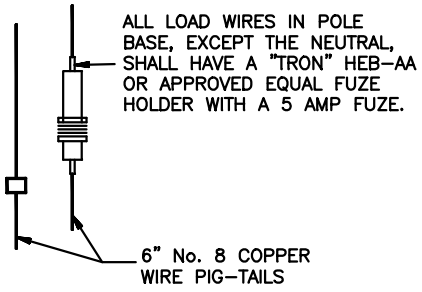

C.I.C. FEED
SIDE VIEW

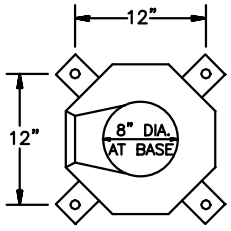

SECTION THROUGH BASE

NOTES:

1. USE 560-C-3250 CONCRETE FOR BASE AND CAP.
2. ALL CONDUCTORS SHALL BE T.H.W.N.
3. ALL CONDUCTORS IN CONDUIT FEED SYSTEM SHALL BE A MINIMUM OF #8 COPPER.
4. ALL CONDUCTORS IN THE STANDARD SHALL BE A MINIMUM #10 COPPER.
5. ALL CONDUITS SHALL BE P.V.C. AS PROVIDED BY THE CURRENT N.E.C. OR S.C.E. STANDARDS.
6. ROUND FOUNDATIONS, WHEN USED, SHALL HAVE A 32" DIAMETER AND DEPTH OF 60".
7. FEED TYPE SHALL BE DETERMINED BY S.C.E.
8. MINIMUM CONDUIT COVER SHALL BE 24" WHEN PASSING UNDER ANY ROADWAY.

CITY OF REDLANDS MUNICIPAL UTILITIES AND ENGINEERING DEPARTMENT

LIGHTING STANDARD

STD. DWG. NUMBER **459-1**

REV.	BY	DATE
A	GD	12/1/20

APPROVED: Goutam K. Dobey, Engineering Manager RCE 75646

DATE: 02/20/2020

SHEET 1 OF 1

THIS PAGE INTENTIONALLY LEFT BLANK

Orange Graphic

Citrus Ave

City of Redlands

Street Name Sign Graphic

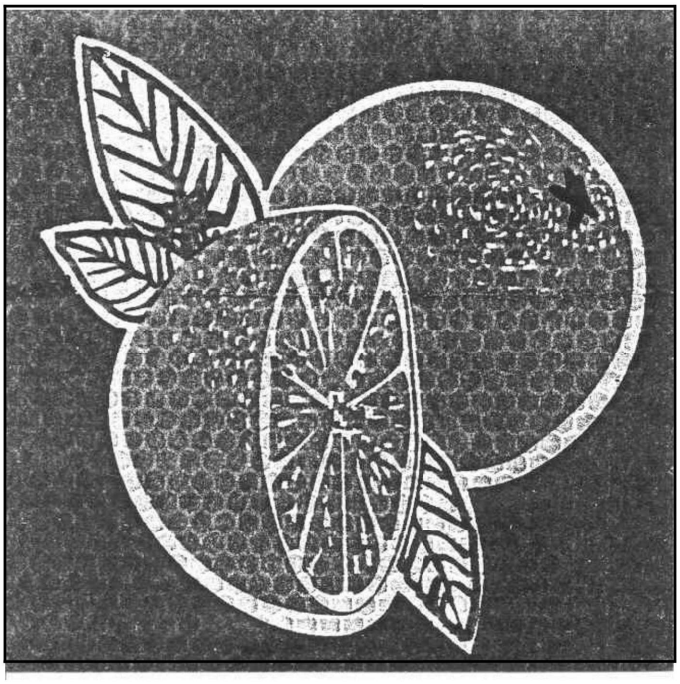

Orange Graphic

Sign shall be 457 mm (18 in.) high by a minimum of 1,220 mm (48 in.) wide by 5 mm (3/16 in.) thick. Length of sign shall be determined by length of street name. In no case shall length cause the sign to be less than 305 mm (12 in.) from any signal head, vertical pole or other object mounted on the traffic signal.

Edge of sign shall be 1,070 mm (42 in.) from the pole, unless otherwise shown on the plans or directed by the Engineer.

Sign legends shall be white letters on blue background.

Lettering style shall be 'FHWA D Series' for all words. Punctuation marks shall not be used.

'Street Name' letter sizes shall be 200 mm (8 in.) for upper case and 150 mm (6 in.) for lower case.

'City of Redlands' letter sizes shall be 90 mm (3½ in.) for upper case and 65 mm (2½ in.) for lower case.

The orange graphic shall be 305 mm (12 in.) by 305 mm (12 in.).

Orange graphic colors shall be: blue for leaf veins on a white background; orange for skin and heart of oranges on white background; and blue for the star located in the upper right quadrant of the whole orange. The white background shall extend 10 mm (d in.) beyond leaf and orange edges.

Sheeting shall be 3M Scotchlite Reflective Sheeting, Diamond Grade Visual Impact Performance (VIP 3990), or approved equal.

For additional requirements regarding size, color, manufacturing and mounting, refer to Section 700 and Section 701 of the Standard Specifications.

CITY OF REDLANDS MUNICIPAL UTILITIES AND ENGINEERING DEPARTMENT

REV.	BY	DATE

REFLECTORIZED STREET NAME SIZE

FOR TRAFFIC SIGNAL MAST ARMS

STD. DWG. NUMBER

491-1

APPROVED: _____ DATE: 02/20/2020

Goutam K. Dobey, Engineering Manager RCE 75646

SHEET 1 OF 1

THIS PAGE INTENTIONALLY LEFT BLANK

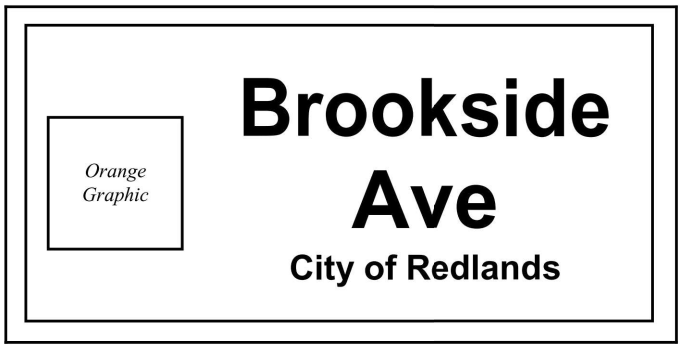

Street Name Sign Graphic

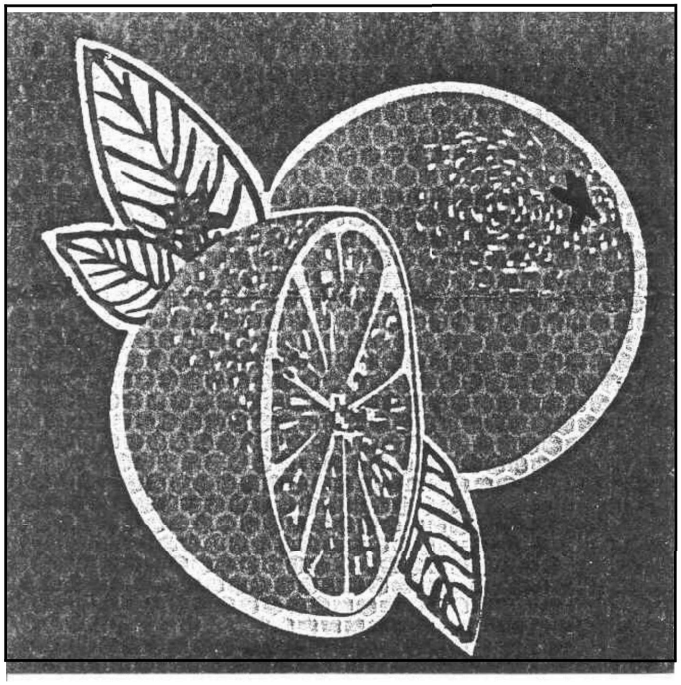

Orange Graphic

Height and width dimensions of sign shall be as necessary for street name. It is intended that this sign be as close to square as possible. Contractor shall submit a scale drawing to the City for approval before manufacture of the sign. Sign shall be 5 mm (3/16 in.) thick. Length of sign shall be determined by length of street name. In no case shall sign be less than 305 mm (12 in.) from any signal head or other object mounted on the traffic signal pole.

Sign legends shall be white letters on blue background.

Lettering style shall be 'FHWA D Series' for all words. Punctuation marks shall not be used.

'Street Name' letter sizes shall be 200 mm (8 in.) for upper case and 150 mm (6 in.) for lower case.

'City of Redlands' letter sizes shall be 90 mm (3½ in.) for upper case and 65 mm (2½ in.) for lower case.

The orange graphic shall be 305 mm (12 in.) by 305 mm (12 in.).

Orange graphic colors shall be: blue for leaf veins on a white background; orange for skin and heart of oranges on white background; and blue for the star located in the upper right quadrant of the whole orange. The white background shall extend 10 mm (D in.) beyond leaf and orange edges.

Sheeting shall be 3M Scotchlite Reflective Sheeting, Diamond Grade Visual Impact Performance (VIP 3990), or approved equal.

For additional requirements regarding size, color, manufacturing and mounting, refer to Section 700 and Section 701 of the Standard Specifications.

CITY OF REDLANDS MUNICIPAL UTILITIES AND ENGINEERING DEPARTMENT

REFLECTORIZED STREET NAME SIZE

FOR TRAFFIC SIGNAL 1-A POLES

STD. DWG. NUMBER **492-1**

APPROVED: Goutam K. Dobey, Engineering Manager RCE 75646

DATE: 02/20/2020

REV. | BY | DATE

SHEET 1 OF 1

THIS PAGE INTENTIONALLY LEFT BLANK

APPENDIX D
CITY OF REDLANDS
STANDARD SPECIFICATIONS

THIS PAGE INTENTIONALLY LEFT BLANK

Water Systems Standard Specifications

https://www.cityofredlands.org/post/design-and-construction-guidelines

Sanitary Sewer Systems Standard Specifications

https://www.cityofredlands.org/post/design-and-construction-guidelines

General Permit Conditions and Trench Specifications

https://www.cityofredlands.org/post/design-and-construction-guidelines

THIS PAGE INTENTIONALLY LEFT BLANK

APPENDIX E
CITY OF REDLANDS
PERMITS

THIS PAGE INTENTIONALLY LEFT BLANK

BUILDING PERMIT APPLICATION

35 Cajon Street
Suite 20
Redlands, California 92373
(909)798-7536 FAX **(909)798-8715**
www.cityofredlands.org/

FOR OFFICE USE ONLY	Plan Check Fees Paid YES NO	Permit #	Bin
Notes			
Routed to: ☐ Building & Safety ☐ Planning ☐ Fire ☐ MUED ☐ Quality of Life			

(Please Print Clearly)

PROPERTY/WORK DESCRIPTION

Is this application the result of a Code Violation? ☐ YES ☐ NO

Street Address:

Suite/Unit #: City: Zip:

Business Name (if applicable):

Occupancy: Construction Type: Zoning:

Valuation of Project:

Work Description:

PROPERTY OWNER

Is this permit being pulled as Owner/Builder? ☐ YES (PROPERTY OWNER'S PACKAGE) ☐ NO

Owner Name:

Mailing Address: City: State: Zip:

Phone: Fax: Email:

CONTRACTOR/ARCHITECT/ENGINEER

City Business License#: Expires:

Company Name: License #: Class: Expires:

Mailing Address: City: State: Zip:

Email: Contact Person: Phone:

APPLICANT (PRIMARY CONTACT)

All communication from our office regarding your permit will be made to this person.

Primary Contact Name: City Business License#: Expires:

Firm: License #:

Address: City: State: Zip:

Phone: Fax: Email:

I Represent: ☐ Owner ☐ Contractor Authorized Agent: **Y N** **(Please provide a NOTARIZED Authorized Agent Form)**

Applicant Signature Date of Application

City of Redlands

Building & Safety Division
35 Cajon St., Suite 20
Redlands, Ca 92373
Phone (909) 798-7536
www.cityofredlands.org

MINIMUM PLAN CHECK SUBMITTAL CHECKLIST

Front counter staff will review this checklist prior to plan check submittal to ensure completeness.

Residential: New Addition/Alteration (Circle one) **Commercial:** New/Addition T.I. (Circle one)

	Documents	Check If Provided	Filled by Staff		
			Required	Provided	
Plans	Completed building permit application form	☐	☐	☐ Yes	☐ No
	Detailed Scope of Work on cover sheet	☐	☐	☐ Yes	☐ No
	Project Data (Type of Const., Occupancy Group, sq.ft., structure height, fire sprinklers, etc.)	☐	☐	☐ Yes	☐ No
	Plot Plan/Site Plan (including property setback dimensions, location of septic system, etc.)	☐	☐	☐ Yes	☐ No
	Floor Plans (existing and proposed)	☐	☐	☐ Yes	☐ No
	Cross Sections/details	☐	☐	☐ Yes	☐ No
	Elevations	☐	☐	☐ Yes	☐ No
	Roof Plan	☐	☐	☐ Yes	☐ No
	Energy Forms (including Energy and Zero Net Energy)	☐	☐	☐ Yes	☐ No
	Foundation Plan	☐	☐	☐ Yes	☐ No
	Structural Framing Plans	☐	☐	☐ Yes	☐ No
	Structural Details	☐	☐	☐ Yes	☐ No
	Mechanical/ Electrical/ Plumbing plan	☐	☐	☐ Yes	☐ No

To be completed by Applicant

I understand that an incomplete plan check submittal may result in delay of project approval

Applicant Name (Print) _____ Contact Phone No. _____

Signature_____ Date _____

Rev. 7/14/2020

APPENDIX F
CITY OF REDLANDS
CONTRACTOR SAFETY PROGRAM

THIS PAGE INTENTIONALLY LEFT BLANK



CONTRACTOR SAFETY PROGRAM

Rev. July 2024

TABLE OF CONTENTS

I. POLICY 3

II. AUTHORITY 3

III. SCOPE 3

IV. DEFINITIONS 3

V. RESPONSIBILITIES 4

RISK MANAGEMENT 4
PROJECT MANAGER (CITY) 5
INSPECTOR (CITY) 5
EMPLOYEES (CITY) 5
CONTRACTOR 5
PROJECT SAFETY OFFICIAL 6

VI. PROGRAM 6

SAFETY PREQUALIFICATION QUESTIONNAIRE 6
APPEAL PROCESS 7
CONSTRUCTION PROJECTS (TIER I AND TIER II) 8
INSPECTIONS 9
TRAINING/DOCUMENTATION 9
NON-COMPLIANCE 9
CITY PERSONNEL 9

VII. RECORDKEEPING 10

VIII. ADDITIONAL REFERENCES 10

ACKNOWLEDGMENT OF RECEIPT (A) 11
SAFETY PREQUALIFICATION QUESTIONNAIRE (B) 12
NOTICE OF NONCOMPLIANCE (C) 13
JOB HAZARD ANALYSIS (D) 14
INCIDENT INVESTIGATION FORM (E) 15

I. Policy

The purpose of this Contractor Safety Program ("CSP") is to ensure, as best as reasonably possible, the protection and safety of all persons and property during construction activities undertaken by private contractors on behalf of the City of Redlands ("City"). The City has a comprehensive and structured approach in outsourcing services performed on City facilities by third-party persons and entities ("Contractor(s)"). The first phase of this comprehensive approach includes actively screening Contractors based on safety records, safety performance, and safety compliance. After the qualified Contractor is awarded a contract, the Contractor must then ensure compliance with all local, state, federal and Cal/OSHA regulations applicable to the contracted scope of work, and requirements set forth within this CSP. The Contractor, its agents, and personnel must adhere to the policies and procedures set forth by this CSP and all applicable laws and regulations.

II. Authority

California Code of Regulations, Title 8, Section 336.10 "Determination of Citable Employer"
California Code of Regulations, Title 8
"Greenbook" Standard Specifications for Public Works Construction
Redlands Municipal Code
California Building Code

III. Scope

This CSP applies to all Contractors who provide or render construction or improvement services for City-owned property and facilities.

The Contractor services covered under this CSP include, but are not limited to, the following:

A. New construction;
B. Remodeling;
C. Facility maintenance or repair;
D. Equipment installation or maintenance; and
E. Services (i.e. janitorial, fleet operations, landscaping, etc.)

Consultants/ Professional service providers are exempt from having to submit a Safety Prequalification Questionnaire ("SPQ"), prior to the beginning of work, but they are expected to be compliant with industry best practices with regards to maintaining a safe work environment for their employees and others.

IV. Definitions

A. **Contract –** any written agreement between the City of Redlands and a Contractor, to perform a specified scope of work on City facilities. With respect to this policy, a contract includes, but is not limited to: awarded purchase orders, bids, and/ or project contracts.
B. **Construction Work –** construction, alteration, and/or repair, including painting and decorating.
C. **Contractor –** a person or entity (including all personnel) awarded a contract to perform work on City property or facilities.
D. **D.A.R.T Rate –** Injuries and illnesses severe enough to warrant: Days Away, Restrictions and Transfers. The DART rate is calculated using the following formula: Number of OSHA Recordable injuries and illnesses that resulted in Days Away x 200,000/divided by total hours worked by all employees during the year covered.

E. **Designated Work Area –** an area where it is necessary to restrict or limit entry or access of nonessential personnel or the public. Examples include work areas involving remediation abatement, demolition, excavation, and overheadlifting.
F. **Facilities –** any building or property owned by the City of Redlands.
G. **Hazard –** source or situation with a potential for harm in terms of injury or health, damage to property, damage to workplace environment, or a combination ofthese.
H. **Job Hazard Analysis ("JHA") –** a technique that focuses on job tasks as a way to identify hazards before they occur. It focuses on the relationship between the worker, the task, the tools, and the work environment. The objective is to eliminate the risk or to utilize control measures to reduce the risk.
I. **North American Industry Classification System ("NAICS") –** is the standard used by Federal statistical agencies in classifying business establishments for the purpose of collecting, analyzing, and publishing statistical data related to the U.S. business economy.
J. **Non-compliance –** any deviation from standards, practices, processes, procedures, regulations etc. that could either directly or indirectly lead to injury or illness, property damage, damage to the workplace environment, or any combination of these criteria.
K. **Notice of non-compliance –** form provided to the Contractor by the City alerting the contractor of non-compliance with City specifications, Cal/OSHA regulations, or any other generally accepted safe work practice.
L. **Non-compliant hazardous work condition –** any hazard that is considered to be non-compliant with State or Federal safety and health regulations, City specifications, or any inconsistency with generally accepted work practices.
M. **Personnel –** all Contractor employees, contractors, sub-contractors and agents providedaccess to City property or facilities.
N. **Recordable Incident** – any injury or illness resulting in death, days away from work, restricted work or transfer to another job, medical treatment beyond first aid, or loss of consciousness per OSHA Section 1904.7(a).
O. **Safety Tailgate –** informal safety meeting generally conducted at the job site prior to the commencement of a job or work shift.
P. **Services –** any and all, labor, duties, functions and activities required to be performed by the Contractor under the contract and any subsequent addenda.

V. Responsibilities

RISK MANAGEMENT

A. Update, maintain, and administer this CSP;
B. Maintain centralized records of training, site visit data, written programs, tailgate meetings, permits, and all other necessary contractor related documentation;
C. Provide technical assistance to Engineering personnel;
D. Attend Pre-construction meetings and progress meetings as needed;
E. Provide assistance on safety inspections as needed;
F. Review safety submittals;
G. Provide guidance on pre-qualification determination; and
H. Provide training to affected city personnel with responsibilities under thisprogram.

PROJECT MANAGER (CITY)

The Project Manager has the authority to delegate any or all portions of this CSP to subordinates, but the Project Manager will be held accountable for their compliance. The Project Manager shall contact Risk Management, as necessary, for assistance in relation to this CSP.

A. Ensure safety hazards are addressed in a timely manner;
B. Communicate safety concerns during pre-construction meetings and progress meetings;
C. Inform impacted employees of construction activities scheduled in their work area;
D. Enforce pre-qualification procedures in bidding process; and
E. Ensure this CSP is properly executed.

INSPECTOR (CITY)

The City of Redlands construction inspector is not a safety professional and will only provide "Notice of Non-Compliance" for obvious and serious non-compliant conditions.

A. To the best of their abilities, inspect work sites for safety hazards;
B. Communicate safety concerns to Contractor;
C. Provide Contractor with "Notice of Non-Compliance" when serious conditions occur or repeat violations;
D. Collect documentation needed for construction worksites;
E. Submit documentation to Risk Management for recordkeeping;
F. Maintain photo documentation of safety hazards;
G. Never enter situations that can harm or endanger himself/herself;
H. Never use personal protective equipment (PPE) or enter situations, which they are not trained for;
I. Contact Emergency Medical Services (911) and Risk Management in case of emergency; and
J. Attend and communicate safety concerns in progress meetings.

EMPLOYEES (CITY)

A. Immediately notify the Project Manager, inspector, or Risk Management of any safety related concerns at a Contractor job site; and
B. Contact Emergency Medical Services (911) and Risk Management in case of emergency.

CONTRACTOR

Where relevant and applicable, the Contractor's responsibilities shall include:

A. Compliance with requirements and responsibilities detailed within the Contractor Safety Program;
B. Ensure all local regulatory requirements are met and all necessary permits are obtained before conducting work on behalf of the City;
C. Designate a Project Safety Official by name who shall always be available to abate safety hazards;
D. Ensure all personnel have the appropriate qualifications and training to perform the contracted work (Copies of current training documentation and certifications must be on file with the City);
E. Inform City Project Manager or inspector of any job site safety hazards or concerns;
F. Inform City Project Manager if any suspected asbestos-containing material is located;
G. Conduct and submit Job Hazard Analysis (JHA) before work and as required by change of tasks;
H. Conduct and submit Safety Tailgates on a bi-weekly basis;
I. Provide all required PPE necessary to conduct work safely and in accordance with required local regulations;
J. The safety of all individuals who enter work site;
K. Spill cleanup;
L. Immediately report any incidents, accidents, near misses, unsafe conditions, or unsafe acts involving any jobsite personnel;

M. Arrange for the proper storage and removal of waste generated prior to the completion of job, and provide confirmation that the materials have been removed or disposed of in a manner compliant with all applicable environmental regulations;
N. Removing all equipment used during work activities and ensuring proper housekeeping of designated work area at the end of each workday and upon completion of the job;
O. Contact Emergency Services (911) and Project Manager in the event of an emergency; and
P. For the actions of their subcontractors, as they may pertain to this CSP, including their adherence to its contents and review of this document.

PROJECT SAFETY OFFICIAL (CONTRACTOR)

A. Shall always be at the work site;
B. Must be thoroughly familiar with the Contractor's Injury and Illness Prevention Program (IIPP) and Code of Safe Practices;
C. Shall always be available to abate any potential safety hazards; and
D. Shall have the authority and responsibility to shut down an unsafe operation, if necessary.

VI. Program

SAFETY PREQUALIFICATION PROCESS

A. The safety prequalification process is intended to:
   - Provide the City with knowledge of past and current safety performance of Contractors working on City construction projects;
   - Improve Contractor compliance with City safety rules, including safe work practices required by applicable regulations and laws; and
   - Improve safety during Contractor activities.
B. A copy of the SPQ shall be provided to each person or entity bidding on a project, as part of the bidding process.
C. The completed questionnaire shall be returned and reviewed prior to awarding contract work, with supporting information provided as indicated by responses on the questionnaire.
D. The SPQ shall be submitted to 35 Cajon St., Suite 4
   Redlands Ca, 92373
   Attention: Project Name-Contractor Name-SPQ
E. The following criteria and information relating to the Contractor will be reviewed prior to awarding contract:
   - Contractor License;
   - Incident Rates;
   - OSHA Citations;
   - Safety Policies;
   - Safety Programs and Procedures;
   - Compliance History on City Projects; and
   - Certification Statement.
F. Contractor must qualify in each section to be approved for the award of a contract.
G. If a Contractor fails to pass prequalification procedure, the City has the right to disqualify the Contractor's proposal.

H. All costs associated with compliance with City of Redlands prequalification requirements shall be at the sole expense of the Contractor.

I. If a Contractor provides information that is later determined to be false, or improperly withholds information, the Contractor will be immediately disqualified.

J. Any questions or information relating to filing this questionnaire may be answered by reaching:
   - Engineering: (909) 798-7698; or
   - Risk Management: (909) 798-7514

DISQUALIFICATION APPEAL PROCESS

This provision is established pursuant to Public Contract Code section 20101(d) which requires every public agency that requires prospective bidders to prequalify pursuant to the law to establish "a process that will allow prospective bidders to dispute their proposed prequalification rating prior to selection of an alternate bidder." If the City intends to disqualify a bidder based upon the bidder's safety record, the City will notify the bidder in writing and provide the bidder with any supporting evidence that has been received from others or adduced because of an investigation by the City. The notice of intention shall be sent by certified mail with return receipt requested or by overnight mail via a delivery service that provides online tracking which identifies the date of the prospective bidder's receipt of the notice, and shall include notice that the bidder has the right to, and may request a hearing to rebut any evidence used as a basis for disqualification and to present evidence to the City as to why the prospective bidder should be found qualified. Requests for a hearing must be made by written request to the City within ten calendar days of the date of the prospective bidder's receipt of the City's notice of intention. If the bidder does not request a hearing within the time allowed, the City's determination shall stand unchallenged and become final.

Within seven calendar days of receiving the bidder's request for a hearing, the City shall notify the bidder in writing of the date, time and place of the hearing. The hearing shall be held no sooner than ten (10) calendar days and no later than fifteen (15) calendar days after the notice is given. The notice shall inform the bidder of its right to present testimony and documents in support of its position.

The hearing shall be conducted before the Redlands City Manager, which may be continued from time to time as reasonably determined by the City Manager but shall not exceed forty five (45) days. At the conclusion of the hearing, and after considering all testimony and documentation presented, the City Manager shall issue a written decision no later than five calendar days following the hearing. The City Manager's decision shall be final and is not subject to further appeal to the City.

The bidder shall not be entitled to bid on any contracts with the City until it has met the safety pre-qualification standards. If the City Manager approves an appeal, the contractor will have been deemed to meet the qualification standards and it will be valid for one year. The bidder shall have the right to withdraw its application for prequalification or its appeal at any time before the City Manager's decision becomes final. Such withdrawal will not preclude the bidder from re-applying for prequalification.

CONSTRUCTION PROJECTS

A. After a contract is awarded, the Contractor shall maintain, throughout the duration of the project, safety measures as necessary to protect the public and workers within, or in the vicinity of, the designated work zone. This includes an evaluation of the work to be performed and the hazards likely to be encountered. Contractors are expected to follow, at a minimum, all pertinent laws, rules, and regulations for the location in which they will be working. Where applicable, Contractor Safety Programs will meet or exceed City programs/ procedures and are subject to review and approval by the City prior to contract execution.

B. Job Hazard Analysis ("JHA")
    1. Prior to a notice to proceed a JHA must be completed utilizing the City's form, or equivalent, to assess the hazards present in the designated work area. Any information requested on the City's form, but not stated on the equivalent form utilized, shall be provided separately with the original submission.
    2. All members of the construction unit must sign the JHA to acknowledge hazard abatement procedures.
    3. JHA must be kept at job site accessible to all impacted personnel.
    4. Failure to follow JHA procedures may lead to termination of the contract.
C. Personal Protective Equipment ("PPE")
    1. All required PPE must be always worn during work activities.
    2. All mandatory PPE must be highlighted in the JHA.
    3. The Contractor shall provide PPE.
    4. Failure to follow PPE guidelines may lead to termination of the contract.
D. Safety Tailgates
    1. Safety Tailgate Meetings must be held on a biweekly basis for all construction projects.
    2. The first meeting shall take place on Day 1, Week 1 and every other week thereafter.
    3. Tailgates shall be signed by all personnel and submitted to Construction Inspector for recordkeeping.
    4. Tailgate topics should be specific to the scope of work of the project.
E. Injury Reporting
    1. Contractors shall immediately report injuries or accidents to the Project Manager (regardless of severity). Additionally, contractors are responsible for and must also conduct accident investigations of any injuries that occur on site and provide results to the Project Manager.
    2. Use the City Incident Investigation Form (Attachment E), or equivalent, to meet this requirement.
F. Spill Prevention
    1. The Contractor is responsible for any spill within the confines of the project and those outside of the construction limits caused by the Contractor's defective equipment, containers, or personnel.
    2. Secondary spill containment systems shall be used to prevent contamination of the environment.
G. Construction in Occupied Buildings
    1. When building occupants are present during construction projects additional safeguards must be implemented to eliminate exposures and complaints. Dust/ particulates from demolition, sanding and other construction activities must be controlled by adequate ventilation, or containment and negative air ventilation systems based upon the specific type of activity and particle. Similar controls must be utilized for odorous activities including, but not limited to, carpet adhesive, painting, welding, and coatings.
    2. The Contractor shall ensure that the HVAC system is protected to prevent contamination. If an HVAC system is unprotected and contaminated by any construction/demolition materials, the Contractor shall be held responsible for the cost of cleaning the system and any subsequent repairs therein.
    3. Negative air ventilation systems shall have appropriate filtration and be exhausted outside of the building.

INSPECTIONS

A. Follow-up inspections will be executed to enforce compliance with safety and health requirements.
B. Follow-up inspections will be conducted as part of routine site inspections by construction inspector and Risk Management employees.

C. The SPQ aims to provide the City with knowledge of Contractor safety history and safety practices. This minimizes the need for an increased frequency of inspections. In addition, the City will take the following guidelines into consideration when determining the frequency of inspections.
    1. Scale of project;
    2. The frequency with which the number and types of hazards change as the work progresses;
    3. More frequent inspections will be implemented in the beginning of the project; and
    4. When the Contractor has never worked for the City.

TRAINING/DOCUMENTATION

A. The contractor will ensure that all personnel are trained for the scope of work they are assigned, as well as the equipment they will be utilizing.
B. Documentation shall be on file with the City prior to project start.
C. Personnel missing training documentation shall not be permitted to work on awarded City projects.
D. Training requirements are mandated by Federal and State Regulations. This may include, but is not limited to, the programs listed in the SPQ.

NON-COMPLIANCE

A. Contractor compliance issues shall be documented on the "Notice of Non-Compliance" form. A copy of this form shall be provided to the Contractor for completion.
B. Upon receipt of the completed "Notice of Non-Compliance" form, the Project Manager and Risk Management will evaluate, based on the incident, and identify, as appropriate, any additional corrective and/or preventive actions for completion.
C. If immediate correction is not feasible, the project will be temporarily stopped until the issue is adequately resolved.
D. City staff with authority to stop work are:
    1. Construction Inspector;
    2. City Project Manager;
    3. City Manager; and
    4. Risk Management staff.
E. Any violation or deviation from safety rules, procedures, or regulations, based on evaluation, may be subject to all disciplinary actions listed as follows:
    1. Verbal warning
    2. Written warning-Notice of Non-Compliance (work may not continue until approved corrections are implemented);
    3. Dismissal of non-complying personnel; and/or
    4. Termination of Contract.

The City of Redlands maintains the right to terminate any contract for the violation of safety issues without liability to the City.

CITY PERSONNEL

A. All affected City employees will be informed in advance of any construction related work or other contract work which has the potential for impacting their workplace. Notifications will be made to all affected employees via e-mail or written memo by the Project Manager or designee. Notifications must include the following information:
    1. Start and end dates of the work to be completed;
    2. Work areas to be affected;

3. Description of work to be completed;
4. Name and phone number of Project Manager;
5. Name and phone number of Construction Inspector; and
6. Name and phone number of Risk Management.

B. Employees should be instructed to notify the Project Manager regarding logistical issues or other concerns. Safety and Health concerns should be directed to either the Project Manager, Inspector, or Safety Specialist.

VII. Recordkeeping

The City's Human Resources / Risk Management Department will maintain all records prepared in association with this CSP, with copies also place on file with the office of the City Clerk.

VIII. Additional References

https://www.dir.ca.gov/title8/336_10.html

City of Redlands
Acknowledgment of Receipt Statement

I acknowledge by signing this document, that I have received and reviewed the City of Redlands' Contractor Safety Program and understand that it contains valuable information on the City's policies and procedures regarding employee safety as it pertains to Contractor activities. Furthermore, I acknowledge that failure to comply with any of these procedures may lead to termination of the contract with the City.

Contractor Signature	Contractor Title:
Contractor Name (Print)	Date Signed

If you have any questions regarding this document, please contact the Risk Management Division at (909) 798-7514.

CITY OF REDLANDS
SAFETY PREQUALIFICATION QUESTIONNAIRE

Omitting or reporting false information on this questionnaire may result in disqualification of bid. The City of Redlands reserves the right to conduct random or for-cause audits of information stated in this questionnaire. If deemed necessary, additional documentation may be requested by the City to verify responses on this questionnaire.

SECTION 1 – GENERAL INFORMATION

Company Name:	
Contractor License #:	Expiration Date:
Address:	
City:	State: Zip Code:
Name of Person Submitting Application:	
Title:	Telephone #:
Email Address:	
Identify the highest-ranking Safety/Health Professional in your Company:	
Name:	
Title:	Telephone #:

SECTION 2 – INCIDENT RATES & WORKER'S COMPENSATION INFORMATION

INCIDENT RATES Provide your actual injury and illness data below:	Provide the NAICS Code Number that best represents your Firm:_____ Provide any additional numbers here:_____

(Provide three full years of data)	Last Calendar	2 Years Ago	3 Years Ago
Number of hours worked by all employees:			
Total Recordable Incident Rate*:			
D.A.R.T. Rate*:			
Total Number of Fatalities:			

Incident Rate = [(Total Recordable Cases X 200,000 hours)/ Number of hours worked by all employees]

D.A.R.T. Rate = [(Total Number of entries for Days Away, Restricted and Job Transfer X 200,000 hours)/ Number of hours worked by all employees]

If your latest incident rates and D.A.R.T. rates are greater than 100% of the industry average for all your NAICS code Numbers Listed, your bid may be disqualified.

The industry average can be found at www.bls.gov

WORKERS' COMPENSATION INFORMATION

1. Provide your Workers' Compensation Experience Modification Rate (EMR) Data:

	Policy Year	EMR
Current EMR*		
1 Year Ago:		
2 Years Ago:		
3 Years Ago:		

* If your current EMR is greater than 1.25, initialing here certifies that you will provide a competent, full- time person or representative responsible for safety for all City projects:_____

* Initialing here certifies that your firm does not have an EMR:_____
(Submit a copy of your firm's Loss Run Reports for the last three years if your firm does not have an EMR.)

Name of your firm's Workers' Compensation carrier:

Phone Number of Workers' Compensation carrier

2. Is your firm self-insured for Workers' Compensation claims?	Yes ❒	No ❒
If yes, please attach a copy of the latest Annual Report to the State of California Department of Industrial Relations and/or State of California Certificate of Self-Insurance.)		

SECTION 3– CITATION HISTORY

1. Has your firm received any regulatory citations in the last threeyears?	Yes ❒	No ❒
If yes, please answer the question below.		

2. Were any of the confirmed (Closed) citations classified as Serious, Willful, Repeat, or Failure to abate?	Yes ❒	No ❒
3. If yes, please explain:		
4. Have you abated all the citations issued to you in the last three years	Yes ❒	No ❒
If no, please explain abatement action plan:		

SECTION 4 – SAFETY POLICIES

	Questions (Please check YES or NO)	YES	NO*
1.	Does your company provide and adhere to a written Illness Prevention Program (IIPP) (CCR Title 8 §3203(a))? If yes, a copy of the program will be required on-hand at the job site throughout the duration of the contract. Please attach a copy to your bid proposal.	☐	☐
2.	Does your company provide and conduct Tailgate Meetings or equivalent with employees at least every 10 working days? (CCR Title 8 §1509(e))	☐	☐
3.	Does your company have a policy for disciplinary action for unsafe behavior ensuring employee compliance with safe and healthy work practices? (CCR Title 8 §3203(a)(2))	☐	☐
4.	Does your company provide and abide by a written Code of Safe Practices that relates to your firm's operations. (CCR Title 8 §1509(b)) If yes, a copy of the Code of Safe Practices will be required on-hand at the job site throughout the duration of the contract. Please attach a copy with your bid proposal.	☐	☐
5.	Does your company perform JHAs? (CCR Title 8 §1511(b)	☐	☐
6.	Does your company provide training and retraining programs for ensuring employee compliance with safe and healthy work practices? (CCR Title 8 §3203 (a)(2), (a)(7)	☐	☐
7.	Does your company provide training and retraining programs for ensuring employee compliance	☐	☐

*Please provide reason(s) for NO answer in the box below or on a separate sheet of paper.

Failure to provide the above-referenced documents will result in the contractor's bid being disqualified.

SECTION 5 – SAFETY PROGRAMS AND PROCEDURES

PLEASE ANSWER ALL QUESTIONS BY CHECKING YES OR NO, AND ATTACHING APPROPRIATE DOCUMENTS THAT MAY APPLY OR AS REQUESTED.

		YES	NO
1.	**Is Confined Space work anticipated in the scope of the work awarded? (If no, please proceed to Question 2)**	☐	☐
	If yes, please attach the following:	Attached?	
	Copy of written Confined Space Entry Procedure	☐	☐
	List of personnel authorized on jobsite to work in confined space(s)	☐	☐
	List of personnel authorized on jobsite to serve as Rescue Team	☐	☐
	Verification of personnel training (copies of certs, cards, etc.)	☐	☐
2.	**Is work requiring Lockout/Tagout protocols anticipated in the scope of the work awarded? (If no, please proceed to Question 3)**	☐	☐
	If yes, please attach the following:	Attached?	
	Copy of written Lockout/Tagout (LOTO) Procedure	☐	☐
	List of personnel authorized on jobsite to perform LOTO	☐	☐
	Verification of personnel training (copies of certs, cards, etc.)	☐	☐
3.	**Is work requiring a personal lift anticipated in the scope of the work awarded? (If no, please proceed to Question 4)**	☐	☐
	If yes, please attach the following:	Attached?	
	List of personnel authorized on jobsite to use lifts	☐	☐
	Verification of personnel training (copies of certs, cards, etc.)	☐	☐
4.	**Is work requiring a forklift anticipated in the scope of the work awarded? (If no, please proceed to Question 5)**	☐	☐
	If yes, please attach the following:	Attached?	
	List of personnel authorized on jobsite to use a forklift	☐	☐
	Verification of personnel training (copies of certs, cards, etc.)	☐	☐
5.	**Is work requiring a crane anticipated in the scope of the work awarded? (If no, please proceed to Question 6)**	☐	☐
	If yes, please attach the following:	Attached?	
	Copy of written Crane Program	☐	☐
	Copy of all expected Crane operators' Certifications	☐	☐
	List of personnel designated as Competent under Crane program	☐	☐
	Verification of personnel training (copies of certs, cards, etc.)	☐	☐

NOTE: If awarded bid, more documentation may be required

6.	**Is Hot Work (as defined by OSHA) anticipated in the scope of the work awarded? (If no, please proceed to Question 7)**	☐	☐
	If yes, please attach the following:	Attached?	
	Copy of written Hot Work Procedure	☐	☐
	List of personnel authorized on jobsite to perform Hot Work	☐	☐
	Verification of personnel training (copies of certs, cards, etc.)	☐	☐

7.	**Is Trenching/ Excavation work anticipated in the scope of the work awarded? (If no, proceed to Question 8)**	☐	☐
	Is a plan in place for the disposal of all material that cannot be returned to the trench/ excavation?	☐	☐
	Are appropriate materials for barricading or securing work area at jobsite?	☐	☐
	Has a permit from the Department of Industrial Relations for excavations deeper than 5 feet been obtained?	☐	☐
	If yes, please attach the following:	Attached?	
	Copy of written Trenching/ Excavation Procedure	☐	☐
	Copy of Permit if trench is to exceed depth of 5 feet	☐	☐
	List of personnel designated as Competent under Trenching/ Excavation Program	☐	☐
	Verification of personnel training (copies of certs, cards, etc.)	☐	☐

NOTE: If awarded bid, more documentation may be required

8.	**Is electrical work anticipated in the scope of the work awarded? (If no, proceed to Question 9)**	☐	☐
	If yes, please attach the following:	Attached?	
	Copy of written Electrical Safety Program	☐	☐
	List of personnel designated as Competent under Electrical Safety Program	☐	☐
	Verification of personnel training (copies of certs, cards, etc.)	☐	☐

9.	**Is work that may have an arc flash potential anticipated in the scope of the work awarded? (If no, proceed to Question 10)**	☐	☐
	Are all materials required to safely perform arc flash present?	☐	☐
	If yes, please attach the following:	Attached?	
	Copy of Arc Flash Procedure	☐	☐
	List of personnel designated as Competent under Arc Flash Program	☐	☐
	Verification of personnel training (copies of certs, cards, etc.)	☐	☐

10.	**Is work involving chemicals anticipated in the scope of the work awarded? (If no, proceed to Question 11)?**	☐	☐
	If yes, please attach the following:	Attached?	
	Copy of written Hearing Conservation Program	☐	☐
	List of personnel working in high noise areas	☐	☐
	Verification of personnel training (copies of certs, cards, etc.)	☐	☐

11.	**Is work involving chemicals anticipated in the scope of the work awarded? (If no, proceed to Question 12)?**	☐	☐
	* Copies of SDS for Chemicals used must be kept at jobsite		
	Please attach the following:	Attached?	
	Copy of written Hazard Communication Program	☐	☐
	List of personnel performing work with chemicals	☐	☐
	Verification of personnel training (copies of certs, cards, etc.)	☐	☐
	List trade names of all hazardous materials which you will be using on site:		

12.	**Is work on or adjacent to public roadways anticipated in the scope of the work awarded? (If no, proceed to Question 13)**	☐	☐
	Do you have the appropriate provisions (signs, devices, barricades/)	☐	☐
	Please attach the following:	Attached?	
	Please provide a list of personnel working in traffic areas.	☐	☐
	Verification of personnel training (copies of certs, cards, etc.)	☐	☐

NOTE: If awarded bid, more documentation may be required

13.	**Is it anticipated in the scope of the work awarded that exposure to asbestos is possible? (If no, proceed to Question 14)**	☐	☐
	Please attach the following:	Attached?	
	Copy of written procedure(s)	☐	☐
	List of personnel working with potential exposure to asbestos	☐	☐
	Verification of personnel training (copies of certs, cards, etc.)	☐	☐

14.	**Is it anticipated in the scope of the work awarded that exposure to silica is possible? (i.e. sandblasting, concrete demolition, concrete saw cutting, surface grinding, etc.) (If no, proceed to Question 15)**	☐	☐
	Please attach the following:	Attached?	
	Copy of Silica Control Plan	☐	☐
	List of personnel working with potential exposure to silica	☐	☐
	Verification of personnel training (copies of certs, cards, etc.)	☐	☐

15.	**Is work at heights anticipated in the scope of the work awarded? (If no, proceed to Question 16)**	☐	☐
	Please attach the following:	Attached?	
	Copy of written Fall Protection Program	☐	☐
	List of personnel designated as Competent under Fall Protection Program	☐	☐
	Verification of personnel training (copies of certs, cards, etc.)	☐	☐

16.	**Is work requiring the use of respirators anticipated in the scope of the work awarded? (If no, proceed to Question 17)**	☐	☐
	Please attach the following:	Attached?	
	Copy of written Respiratory Protection Program	☐	☐
	List of personnel using respirators	☐	☐
	Verification of personnel training (copies of certs, cards, etc.)	☐	☐

17.	**If the scope of work to be performed is not adequately represented by questions (1-16), please list any additional Health & Safety concerns below.**

SECTION 6 – COMPLIANCE HISTORY ON CITY PROJECTS

In addition to the previous sections, Contractors that have previously been awarded work by the City, will be equally evaluated on their compliance history in relation to City projects.

SECTION 7 – CERTIFICATION STATEMENT

I Certify under penalty of perjury that:

a. the information contained herein is true and correct to the best of my knowledge, and

b. no attempt has been made to give false or misleading information or to withhold any information.

Signature of Authorized Representative:	Title of Authorized Representative
Printed Name of Authorized Representative	Date Signed:

NOTICE OF NON-COMPLIANCE

Project: _____

Contractor: _____

Notice of Non-Compliance was issued to Contractor's representative, _____,
Name

on _____ at _____.

The following unsafe behaviors were observed at the Contractor's job site:

_____
_____
_____
_____
_____
_____
_____

If the unsafe condition is not immediately corrected, the City of Redlands may take disciplinary action in accordance with the Contractor Safety Program guidelines.

_ _

To be completed by Contractor

Corrective action plan to abate hazards:

_____
_____
_____
_____
_____
_____

Unsafe Condition Resolved: Date: _____ Time: _____

Remarks:

_____
_____
_____
_____
_____
_____

Job Hazard Analysis

Project:			
Company:	Project Safety Official:	Project Manager (City):	
Scope of Work:		Location:	Date:

Tasks	Potential Safety Risks/Hazards	Safety Controls/Mitigate	Required PPE
			☐ Hard Hat ☐ Safety Vest ☐ Safety Glasses/Goggles ☐ Safety Boots ☐ Respirator ☐ Safety Gloves ☐ Face Shield ☐ Fall Protection ☐ Other: _____ _____ _____ _____

Signatures of Employees On-Site this JHA is applicable to:

Employee Signature:	**Print Name:**	**Date:**

INCIDENT INVESTIGATION FORM

Date of Incident:	Time of Incident:	Date Reported:
Lead Investigator:	Contact Information:	
Contractor:	Employee Name:	
Witness 1 Name:	Telephone:	
Witness 2 Name:	Telephone:	
Incident Site/ Location		
Incident Summary:		
Near Miss Yes No	Incident Severity: Minor Significant Major Critical	
Root Cause(s):		
Corrective Actions:		

APPENDIX G
Geotechnical Report

THIS PAGE INTENTIONALLY LEFT BLANK

REPORT OF GEOTECHNICAL INVESTIGATION
CONDITION, SEISMIC AND STRUCTURAL ASSESSMENT OF POTABLE WATER STORAGE RESERVOIRS, PUMP STATIONS, AND TRANSMISSION MAINS
CITY OF REDLANDS, CALIFORNIA

Prepared for

RICHARD BRADY & ASSOCIATES
2655 Camino Del Rio North, Suite 100,
San Diego, California 92108

Prepared by

GROUP DELTA CONSULTANTS, INC.
9245 Activity Road, Suite 103
San Diego, California 92126

Project No. SD691
August 18, 2021

GROUP DELTA

August 18, 2021

Richard Brady & Associates
2655 Camino Del Rio North, Suite 100
San Diego, California 92108

Attention: Mr. Richard Brady, P.E.

SUBJECT: **REPORT OF GEOTECHNICAL INVESTIGATION**
Condition, Seismic and Structural Assessment of Potable Water Storage Reservoirs, Pump Stations, and Transmission Mains
City of Redlands, California

Dear Mr. Brady,

Group Delta Consultants (Group Delta) is submitting this geotechnical investigation report in support of the condition, seismic and structural evaluation that is being performed at sixteen reservoir and pump station sites within the City of Redlands. Group Delta prepared this report per the referenced proposal (Group Delta, 2021).

We appreciate this opportunity to be of continued professional service. Please contact us with questions or comments, or if you need anything else.

GROUP DELTA CONSULTANTS

Kristen Chang, P.E. 70959
Associate Engineer

REGISTERED PROFESSIONAL ENGINEER
KRISTEN E. CHANG
C 70959
EXP. 06/30/23
CIVIL
STATE OF CALIFORNIA

Charles Robin (Rob) Stroop, G.E. 2298
Associate Geotechnical Engineer

REGISTERED PROFESSIONAL ENGINEER
CHARLES ROBIN STROOP
GE2298
Exp.03/31/22
GEOTECHNICAL
STATE OF CALIFORNIA

Distribution: Mr. Richard Brady (rbrady@rbrady.net)

TABLE OF CONTENTS

1.0 INTRODUCTION 1
1.1 Purpose and Scope of Services 1
2.0 BACKGROUND 2
2.1 General Description 2
2.2 Description of Reservoirs and Sites 2
2.2.1 Agate Reservoir 2
2.2.2 Arroyo Reservoir 3
2.2.3 Country Club 1 & 2 Reservoirs 3
2.2.4 Crafton Hill Reservoir 4
2.2.5 Dearborn Reservoir and Booster Pump Station 4
2.2.6 Fifth Avenue Reservoir and Booster Pump Station 4
2.2.7 Highland Reservoir and Booster Pump Station 4
2.2.8 Margarita Reservoir 5
2.2.9 Mill Creek 1 & 2 Reservoirs 5
2.2.10 Sand Canyon Reservoir and Booster Pump Station 6
2.2.11 Smiley Reservoir 6
2.2.12 South Reservoir and Booster Pump Station 6
2.2.13 Sunset Reservoir 7
2.2.14 Texas Grove Reservoir 7
2.2.15 Texas Street Reservoir and Booster Pump Station 7
2.2.16 Ward Way Reservoir and Booster Pump Station 8
3.0 FIELD AND LABORATORY INVESTIGATION 8
3.1 Current Field Investigation 8
3.2 Laboratory Testing 8
3.2.1 Soil Classification 9
3.2.2 Expansive Soils 9
3.2.3 Reactive Soils 9
4.0 GEOLOGY AND SUBSURFACE CONDITIONS 9
4.1 Geologic Setting 9
4.2 Groundwater 10

4.3 Agate Reservoir 10
4.4 Arroyo Reservoir 10
4.5 Country Club 1 & 2 Reservoirs 11
4.6 Crafton Hills Reservoir 11
4.7 Dearborn Reservoir 11
4.8 Fifth Avenue Reservoir 12
4.9 Highland Avenue Reservoir 12
4.10 Margarita Reservoir 12
4.11 Mill Creek 1 & 2 Reservoirs 13
4.12 Sand Canyon Reservoir 13
4.13 Smiley Reservoir 13
4.14 South Reservoir 13
4.15 Sunset Reservoir 14
4.16 Texas Grove Reservoir 14
4.17 Texas Street Reservoir 14
4.18 Ward Way Reservoir 14
5.0 SEISMICITY 15
5.1 Seismic Setting 15
5.2 Historic Seismicity 16
6.0 GEOLOGIC AND SEISMIC HAZARDS 17
6.1 Strong Ground Motion 18
6.2 Earthquake Surface Fault-Rupture Hazard 18
6.3 Liquefaction 19
6.4 Seismic Compaction 20
6.5 Landslides and Slope Instability 21
6.6 Tsunamis and Seiches 22
6.7 Flood 22
7.0 GEOTECHNICAL RECOMMENDATIONS 23
7.1 Seismic Design Parameters 23
7.2 Existing Foundations 24

7.3 Earth Retaining Pressures 25

8.0 LIMITATIONS 26

9.0 REFERENCES 26

TABLES

Table 1 – Geologic and Seismic Hazards

FIGURES

Figure 1 – Site Location Map
Figure 2A through 2P – Exploration Location Maps
Figure 3 – Regional Geological Map
Figure 4 – Regional Fault Map
Figure 5A – 2014 National Seismic Hazard Map Fault Sources
Figure 5B – Provisional 2023 National Seismic Hazard Map Fault Sources
Figure 6 – Historic Seismicity
Figure 7 – Surface Fault Rupture Fault Zones
Figure 8A – County Fault Zone, Fifth Avenue Reservoir
Figure 8B – Reservoir Canyon Fault, Fifth Avenue Reservoir
Figure 9 – Liquefaction & Landslides Zones
Figure 10 – March 2011 Satellite Photograph, Sunset Reservoir
Figure 11 – Flood Hazards

APPENDICES

Appendix A – Field Exploration
Appendix B – Geophysical Report (SubSurface Surveys, 2021)
Appendix C – Laboratory Testing
Appendix D – Site-Specific Seismic Hazard Evaluation

1.0 INTRODUCTION

This report presents the results of a geotechnical investigation by Group Delta Consultants (Group Delta) to support the seismic and structural evaluation of eighteen potable water reservoir and pump station at sixteen different sites within the City of Redlands (Figure 1). We prepared this report per the referenced proposal (Group Delta, 2021). This report presents our findings, conclusions, and recommendations for the seismic and structural evaluation of all sixteen sites.

1.1 Purpose and Scope of Services

The purposes of our investigation were to characterize the site geologic conditions and seismicity, provide a screening level geologic and seismic hazards assessment, and provide recommendations for the structural and seismic evaluation of the tanks. Group Delta developed the recommendations from reviewing the available as-built plans provided by the City of Redlands, research and review of publicly available geologic information for the sites, recent subsurface investigation and geophysical surveys, laboratory testing, and geologic and geotechnical engineering interpretation and analyses. In summary, we provided the following scope of services:

- Review of available background information, including as-built plans, geologic maps, fault maps, hazard maps, and topographic and aerial photographs.
- A geologic site reconnaissance and field investigation consisting of nine (9) Cone Penetration Tests (CPTs) at seven selected reservoir sites (see Table A-1 in Appendix A). In addition, a hand-auger boring was performed at each site until refusal at a shallow depth was encountered to collect the soil samples for further testing and to assist with near-surface soil characterization. Figures 2A through 2P shows the approximate CPT and hand-auger boring locations at each site. Appendix A provides CPT log records and hand-auger boring logs.
- Acquisition and analysis of geophysical lines to evaluate the seismic velocities of the subsurface soils at select sites. Appendix B provides the geophysical survey report prepared by Subsurface Surveys & Associates, Inc.
- Geotechnical laboratory testing of bulk soil samples collected from hand-auger borings. Laboratory tests included sieve analysis, moisture content, Atterberg Limits, and corrosion (pH, resistivity, soluble sulfate and chloride). Appendix C provides the geotechnical laboratory test results.
- Engineering analysis and interpretation of the field and laboratory data to develop site-specific seismic design parameters and recommendations for the structural and seismic evaluation of the tanks.
- Preparation of this report with our findings, conclusions, and recommendations.

2.0 BACKGROUND

2.1 General Description

The various reservoirs that make up the City of Redlands potable water storage facilities consist of above-grade circular steel or concrete, or below-grade rectangular concrete reservoirs. They were predominantly constructed in the 1960's and 1970's, but some were constructed as early as 1924, or as recently as 2005. The following table lists the eighteen reservoirs and seven pump stations that were evaluated as part of this project.

Reservoir	Booster Pump Station	Date of Construction	Material	Capacity (MG)
Agate	-	1968	Steel	3
Arroyo	-	1965	Steel	0.5
Country Club 1	-	1924	Concrete	1
Country Club 2	-	1969	Concrete	2
Crafton Hills	-	1970	Steel	1
Dearborn	Yes	1972	Concrete	10.6
Fifth Avenue	Yes	1974	Concrete	5
Highland	Yes	1976	Concrete	10
Margarita	-	1964	Concrete	2.4
Mill Creek 1	-	2005	Steel	
Mill Creek 2	-	2005	Steel	
Sand Canyon	Yes	1973	Concrete	3.5
Smiley	-	1964	Steel	3
South	Yes	1964	Steel	2
Sunset	-	1967	Steel	3
Texas Grove	-	2005	Concrete	3.9
Texas Street	Yes	1956	Steel	1
Ward Way	Yes	1958	Steel	2

The sites are located throughout the City of Redlands as shown in Figure 1. A description of the sites and existing improvements are provided in the following sections.

2.2 Description of Reservoirs and Sites

2.2.1 Agate Reservoir

The Agate reservoir is located on a triangular lot in the northern portion of Mentone, south of the confluence of Mill Creek and the Santa Ana River, as shown in Figure 1 and Figure 2A. The site is

bounded by Agate Avenue on the east, San Bernardino Avenue on the north, and residential properties on the south and west.

Record drawings from the City of Redlands (City of Redlands, 1967a, 1967b) indicate that the site grades originally sloped down to the northwest, dropping in elevation about ten feet across the property. To accommodate the site grading and excavation for the construction of the tank, a retaining wall was built along the southeast property line. Within the footprint of the tank, the grades were cut by up to five feet. The record drawings (City of Redlands, 1967b) indicate that the tank is supported by a 1-foot-thick ringwall embedded 1.5 feet below grade.

2.2.2 Arroyo Reservoir

The Arroyo reservoir is located southwest of I-10 in the Smiley Heights neighborhood of Redlands, at the top of the hillside (Figures 1 and 2B). The lot is a small lot at the end of a cul-de-sac on Arroyo Crest in a residential neighborhood and is hidden from view of the street by trees, shrubs and other vegetation. Access to the tank is by a shared driveway with the neighboring property. The tank is located only about 20 feet away from the top of the hillside that descends into San Timoteo Canyon below. A gravel perimeter access path surrounds the tank.

Constructed in 1965, Arroyo reservoir is the smallest of the City of Redlands potable water storage reservoirs. It is a steel tank supported by a ringwall foundation that is approximately 1 foot wide and embedded about 1 foot below the adjacent ground surface, based on the construction plans (City of Redlands, 1965). Grading plans were not available for review at this time.

2.2.3 Country Club 1 & 2 Reservoirs

Country Club reservoirs 1 and 2 are in the South Redlands neighborhood, south of I-10 and adjacent to Country Club Drive as shown in Figure 1 and Figure 2C. The reservoirs are two large partially buried concrete tanks with capacities of 1 MG and 2 MG, respectively. Country Club 1 was originally built in 1924; however according to plans by Black & Veatch (2010), the tank was replaced in 2010. Country Club 2 is the larger of the two tanks and was built in 1969. The two tanks are accessed by a narrow roadway, and both tanks are encircled by paved asphalt access roads.

Based on a review of the plans by Black and Veatch (2010), reservoir 1 was replaced with a steel liner tank. Concrete was backfilled in a 6-inch space between the new steel liner and the existing concrete ring walls, and an 8-inch-thick sand layer was placed below the steel base plate above the existing concrete slab.

Review of the grading plans for construction of Country Club 2 indicates the reservoirs were built in a hillside area with the highest elevation at the eastern side of the site that gently sloped down to the west, north and south sides. To build the Country Club 2 tank, the site was cut from a couple of feet at the south to about 20 feet at the east. The tank was then backfilled by about 10 to 18 feet to create a perimeter roadway around the tank, with a 2H:1V (horizontal to vertical ratio) slope at the south side of the property to accommodate the road. The perimeter wall foundation for Country Club 2 is about 3 feet wide and 1 foot thick and transitions to a 6-inch-thick slab. Roof columns are supported by 4-foot square, 1-foot-thick footings (James M. Montgomery, 1969).

2.2.4 Crafton Hill Reservoir

The Crafton Hills reservoir is located east of Redlands in Yucaipa, at the top of a hillside within the Crafton Hills as shown in Figure 1 and Figure 2D. Slopes descend in all directions from the property on which the reservoir is sited. The reservoir is a 1 MG steel tank built in 1970. No grading or foundation plans were available for review at this time.

2.2.5 Dearborn Reservoir and Booster Pump Station

Dearborn reservoir is located near the eastern edge of Redlands where it borders Mentone, northeast of I-10, as shown in Figure 1 and Figure 2E. The site is within an alluvial valley with relatively level grades across the site. The reservoir is a buried rectangular concrete reservoir with a 10.6 MG capacity. Based on a review of available plans (James M. Montgomery, 1971), the existing grade was partially excavated for the construction of the reservoir, then backfilled around the perimeter. The backfill forms a level grade around the perimeter just below the top of the roof that descends at variable distances from the reservoir walls with 2H:1V (horizontal to vertical ratio) slopes that vary in height from about few feet up to about 18 feet.

The reservoir has a perimeter wall footing and column footings that tie into the floor slab. Interior column footings are typically 6-foot square, and the perimeter footing is about 4.25-feet wide by about 1.25 feet deep. Dearborn reservoir was rehabilitated in 2013 (Dudek & Associates, 2013), and at that time many of the interior column footings were retrofitted as well as the concrete wall and footing.

2.2.6 Fifth Avenue Reservoir and Booster Pump Station

The Fifth Avenue reservoir is located in the southeastern portion of Redlands, near the base of Crafton Hills as shown in Figure 1 and Figure 2F. The rectangular property is surrounded by large residential lots and orchards and is accessed by a long dirt road off Crafton Avenue. The site slopes gently to the northwest. The reservoir is a buried concrete reservoir, with a narrow, paved perimeter road surrounding the tank. Dirt slopes descend from the roadway on the west and north and ascend to the east and south. Concrete swales are located at the tops of the slopes for erosion control, as the lot is primarily dirt with little vegetation or landscaping. Some signs of erosion are still visible in the dirt and on the paved areas.

Record drawings for the pump station building were available (City of Redlands, 1969). The 32-foot by 40-foot pump station building is supported by an 8-inch by 12-inch footing, and a 6-inch slab. No record drawings for the reservoir were available for review.

2.2.7 Highland Reservoir and Booster Pump Station

The Highland reservoir is located in Ford Park, just west of I-10 in Redlands, as shown in Figure 1 and Figure 2G. The reservoir is a buried rectangular concrete reservoir with a 10 MG capacity, with tennis courts on top of the roof. A pump station, office building, and maintenance shed are present

near the reservoir, adjacent to the park in a gated enclosure. Other improvements include parking lots and paved driveways.

Based on a review of the available drawings (James M. Montgomery, 1974), the existing grades were excavated about 20 to 25 feet below grade to accommodate the reservoir construction, and then backfilled around the perimeter after construction of the tank was completed. The current reservoir at Highland was built in 1976 as a replacement reservoir when an older one was demolished. Available drawings indicate that the pump station was built in the early 1960's.

2.2.8 Margarita Reservoir

The Margarita reservoir is located in a hillside lot in South Redlands, southwest of I-10 as shown in Figure 1 and Figure 2H. The property is located between Sunset Drive on the north, Marilyn Lane on the south, and Margarita Drive on the east, on a shallow east-west oriented ridge. A residential property is located directly west of the site. The reservoir is a buried rectangular concrete reservoir with a 2.4 MG capacity, built in 1964. The site elevations are highest at the east, and generally slope down to the west, north and south.

Soil boring records from 1961 were included in the record plans (Engineering Science, 1962c). The soils are described as compact clayey sand and silty sand in the near surface, and dense to very dense sand and gravel at depths of about 5 feet to 15 feet across the site. Based on a review of the excavation plan (Engineering Science, 1962b), grading for the reservoir was performed by using temporary 1H:1V cut slopes, a few feet high at the southwest but up to about 20 feet at the east. Compacted fill was backfilled around the reservoir with 2H:1H permanent slopes, with a block wall at the west property line. A 10-foot-wide asphalt walkway is present around the perimeter of the reservoir for access.

Record drawings also indicate that the perimeter wall footing is about 14-inches thick and 2-feet wide which transitions to a 6-inch-thick floor slab. Roof columns are supported by 8-foot-square, 1.5-feet deep interior footings.

2.2.9 Mill Creek 1 & 2 Reservoirs

The Mill Creek reservoirs are located in the northeast side of Mentone, south of Mill Creek and Highway 38 as shown in Figure 1 and Figure 2I. The two steel tanks are built in a hillside, with cut slopes behind them to accommodate a level pad for tank construction. A narrow, paved perimeter road wraps around both tanks. A graded fill slope to the north of the tanks was built to accommodate the access roadway that descends to highway 38 below.

No record drawings were available for review at this time. However, we understand that the site was originally improved with steel tanks, which were replaced in 2005 with the current reservoirs.

2.2.10 Sand Canyon Reservoir and Booster Pump Station

The Sand Canyon reservoir is located in the Crafton Hills in Yucaipa, just north of Campus Drive and east of Crafton Hills College as shown in Figure 1 and Figure 2J. A tall cut slope ascends to the east of the tank. A dirt perimeter road surrounds the tank and is supported by a graded fill slope at the west. A dirt access road is graded at the northwest, that connects to the paved road and buildings at the west side of the site.

Based on a review of satellite photographs and visual observations, the site was developed by cutting into a rock slope to create a level pad. Record drawings from 1973 (City of Redlands, 1973) indicate that the footing is 12-inches wide and a minimum of 24-inches below the lowest grade.

2.2.11 Smiley Reservoir

The Smiley reservoir is a 3 MG steel reservoir located in the Smiley Heights neighborhood of Redlands, just south of Smiley Heights Drive, in the hillside above San Timoteo canyon as shown in Figure 1 and Figure 2K. The tank is surrounded by a 15-foot-wide perimeter road, paved with concrete on the north but only covered in gravel at the south. Immediately beyond the perimeter roadway, ascending slopes surround the site, which are heavily vegetated with trees and other plants.

Based on a review of the original grading plans (City of Redlands, 1964a), the site was developed in an old drainage canyon on the northern side of the hillsides above San Timoteo Canyon. The site was cut into the hillside on the south side, creating a 1½H:1V slope that ascends from the perimeter road to the top of the hillside above San Timoteo Canyon with a maximum height of about 50 feet. The drainage canyon on the north side of the tank was filled in to create the roadway in front of the reservoir. The reservoir pad was cut down entirely within the native formational soils. Record drawings (City of Redlands, 1964b) indicate the ring wall foundation is about 1-foot wide and 1.5-feet below grade. Site improvements, including reservoir recoating, have been performed over the years (City of Redlands, 2009, 2011).

2.2.12 South Reservoir and Booster Pump Station

The South reservoir is located in the Redlands hills area, south of I-10 and between Patricia Drive and E. Sunset Drive, as shown in Figure 1 and Figure 2L. The site is accessed by a winding, paved access road that descends the slopes to the level pad where the tank and pump station are located. Retaining walls are present along the access road at the west, and behind the pump station to the south. Slopes ascend to the east to the adjacent residential properties. Heavy vegetation surrounds the site. The 2 MG steel reservoir and pump station were constructed in 1964.

Based on a review of the grading plan (City of Redlands, 1963), the original site would have been in a small canyon or natural drainage area. To accommodate the level grade for the tank and pump station, the grades were cut down with slopes on the east, south and west sides of the tanks. Based on the available sections and plans, the bulk of the pad for the pump station and reservoir would have been cut, from a couple of feet to about 15 feet from original grades. A retaining wall was

built along the west to support the access roadway. In 2009, new retaining walls were installed on the eastern side of the property (City of Redlands, 2009). Signs of erosion from the slopes above the wall at the eastern side of the site were observed during our site visit, with some minor dirt visible in the roadway.

2.2.13 Sunset Reservoir

Sunset reservoir is located near the southern boundary of the City of Redlands at the top of a hillside, off Helen Court, as shown in Figure 1 and Figure 2M. Slopes descend in all directions from the property on which the reservoir is sited. The reservoir is a 2-million-gallon (MG) steel tank built in 1967. Based on a review of the original grading plan from 1967 (City of Redlands, 1967c), the grades originally sloped to the north requiring a fill wedge to be placed to raise the grade at the north end to accommodate the tank placement. It is not clear the extent of any remedial grading or cut/fill transition grading, if any, was performed prior to fill placement and tank construction. Based on a review of the grading plan, up to about 12 feet of fill was placed on the north side of the site. The perimeter ring wall foundations are 1-foot in width and embedded 2-feet deep based on the plan.

2.2.14 Texas Grove Reservoir

The Texas Grove reservoir is located in the northwest portion of Redlands, south of the Santa Ana River, and just east of the 210 freeway. Orange groves surround the property to the north, east and west, as shown in Figure 2N. The site is accessed from a long driveway off Texas Street to the west. The site is generally flat, with a perimeter paved road.

The tank is a 3.9 MG steel reservoir that was built in 2005. Record drawings from Dudek & Associates (2004) indicate that remedial grading was performed at the site prior to construction of the reservoir. Below the reservoir, 5 feet of soil was removed and recompacted below foundations. For the roads and other improvements, the upper 3 feet of soil was removed and recompacted. Based on these plans, the ring wall foundation is 5 feet wide and 3.5 feet high, but the depth of embedment below the adjacent grade varies. Measurements in the field of the exposed portion of the foundation indicate that the embedment is about 1.5- to 2-feet deep.

2.2.15 Texas Street Reservoir and Booster Pump Station

The Texas Street reservoir located in the northwest portion of Redlands, just east of the 210 freeway, as shown in Figure 1 and Figure 2O. Built in 1956, the 1-MG steel tank is one of the oldest reservoirs in the City of Redlands. The site is accessed from a driveway off of Pennsylvania Avenue, just west of Texas Street. In addition to the tank, the site is improved with the pump station, filtration tanks, and a few other ancillary structures. The site is generally flat and is paved with asphalt.

No record drawings of the original reservoir construction were available for review at this time. However, there were drawings from the City of Redlands (2011) indicating that some improvements, including recoating, were performed in 2011.

2.2.16 Ward Way Reservoir and Booster Pump Station

The Ward Way reservoir is located in the northeast part of Mentone, south of Highway 38 and Mill Creek, as shown in Figures 1 and 2P. The site is bounded by Orange Lane to the west, Fairview Lane to the east, and residential properties to the north and south. The site is generally flat and has a narrow, paved perimeter road around the tank. Much of the remainder of the site is covered by gravel. A small pump station building is located on the north side.

The 2 MG steel tank was built in 1958. No record drawings of the original reservoir construction and details were available for review at this time.

3.0 FIELD AND LABORATORY INVESTIGATION

3.1 Current Field Investigation

The field investigation included geologic reconnaissance and subsurface exploration consisting of cone penetration tests (CPTs) and hand auger borings. Nine CPTs (including seismic CPTs) were advanced to a maximum depth ranging from about 2 to 100 feet below surrounding grades. Shallow refusal was encountered at two sites due to the presence of large cobbles and gravels. Shear wave velocity measurements were obtained in seven of the CPTs. Seismic velocity measurements were obtained with depth at 5-foot intervals. Fifteen hand auger borings were advanced from 1 to 5 feet below surrounding grades. The hand auger borings were backfilled with soil cuttings, and the surface was restored to near the pre-existing condition. The approximate locations of the explorations are shown on the Exploration Location Plans for each site, Figures 2A through 2P. The CPT data and the logs of the hand auger explorations are provided in Appendix A.

In addition, to further characterize the subsurface conditions at some of the sites (where seismic velocity measurements could not be obtained and/or CPTs had shallow refusal), surface geophysical surveys were performed. Seismic velocity measurements were obtained using a digital seismograph in the field. Seismic refraction compressional wave velocity (p-wave) measurements were recorded at select locations to produce 2-D cross sections for stratigraphic analysis, and shear wave velocity measurements (s-wave) were recorded using the Multiple Analysis of Surface Waves (MASW) method to determine the shear wave velocity profile with depth and to obtain the site-specific average shear wave velocity in the upper 30 meters ($V_{S,30}$). The approximate location of the seismic refraction lines is shown on the Exploration Location Plans, Figures 2A through 2P. The detailed report is provided in Appendix B.

3.2 Laboratory Testing

Disturbed bulk samples were collected at from the hand auger borings for laboratory testing and analysis. The geotechnical testing program included sieve analyses and Atterberg limits to aid in soil

classification using the ASTM Unified Soil Classification System (USCS). Index tests were also conducted to help evaluate the expansion potential and soil corrosivity, which are discussed in the following sections. The laboratory test results are summarized below. Appendix C provides the geotechnical laboratory test results.

3.2.1 Soil Classification

Laboratory testing to aid in soil classification was performed including particle size analyses and Atterberg Limits. All collected samples were classified as non-plastic silty sand, silty sand with gravel, and poorly-graded sand with silt (SM, SP-SM). Appendix C presents the results of these tests.

3.2.2 Expansive Soils

In general, the soils encountered in the borings consisted of non-plastic silts and sands, which typically have a Very Low to Low Expansion Index (EI). Laboratory tests and our previous experience suggests that these materials typically have a low to very low expansion potential (EI<50), based on commonly accepted criteria. The Expansion Index test results are presented in Appendix C.

3.2.3 Reactive Soils

A suite of corrosion tests was performed on bulk soil samples obtained from the near-surface soils. Appendix C provides the results of this testing (Figure C-3). To assess the sulfate exposure of concrete in contact with the site soils, samples were tested for water-soluble sulfate content. All tests but one suggest the on-site soils have a negligible potential for sulfate attack based on commonly accepted criteria. At Crafton Hills, a sulfate content of 0.17% was reported, which is considered severely corrosive to concrete.

The pH, resistivity and chloride contents of the soils were determined on selected samples to evaluate the reactivity of the site soils with buried metals. Results of the pH, resistivity, and chloride contents at Crafton Hills indicate the soils are corrosive to metals. At all other sites, the pH and chloride contents do not indicate the potential for corrosion; however, the soil resistivity suggests that most soils may be mildly to moderately corrosive to buried metals. A Corrosion Consultant should be contacted for specific recommendations if future improvements are planned.

4.0 GEOLOGY AND SUBSURFACE CONDITIONS

4.1 Geologic Setting

Regionally, the City of Redlands is located in a seismically active area along the boundary of the Peninsular Ranges geomorphic province of and the Transverse Ranges geomorphic province of Southern California. The Peninsular Ranges are characterized by a series of northwest trending mountain ranges separated by valleys, with a coastal plain of subdued landforms. The Transverse Ranges are characterized by east-west trending mountains and a complex zone of reverse, oblique, and strike-slip faulting along a series of west and northeast trending active faults

Cyclic Quaternary sea level rise and fall has resulted in episodic deeply eroded canyons and subsequent infill, with modern fan deposition at the base of the mountains.

Two of California's most highly active fault zones, the San Andreas fault zone and the San Jacinto fault zone, flank the City of Redlands. The regional geology in the vicinity of Redlands, Mentone, and Yucaipa are depicted on Figure 3, Regional Geologic Map. The City of Redlands lies within the Santa Anna River valley which is underlain by deep accumulations of Quaternary alluvial sediments derived from the locally uplifted mountains. Younger alluvial deposits tend to be found in areas near river channels or drainages, while older alluvial/colluvial deposits are found in flat valley areas or along base of hillsides where they mantle the underlying formational material. In the hillside areas of south Redlands, the geology consists of Pleistocene- and Pliocene-aged San Timoteo formation (QTstu) and Mesozoic age granitoid rocks. The geologic materials encountered at each site are described in detail below.

4.2 Groundwater

No groundwater was encountered in our geotechnical investigation at any of the sites. Regionally, groundwater is very deep (generally 70 feet or deeper below grade) in most of the City of Redlands. However, rainfall, irrigation practices or site drainage may produce seepage or locally perched groundwater conditions at any site.

4.3 Agate Reservoir

The site is underlain by young axial-valley deposits, Unit 3 (Qya3) and shallow fill from previous grading activities. The axial valley deposits are described as middle Holocene, "slightly to moderately consolidated silt, sand, and gravel" (Matti et al., 2003b). Existing fill is likely derived from the alluvial deposits.

Based on our explorations at the site (CPT-2, CPT-2A, HA-2) and the observations of the surface soils exposed, the near-surface soils consist of dark grayish brown sand and silty sand that contains gravels, cobbles, and boulders. Two CPTs were attempted, but refusal was encountered on cobbles between about 2.5 and 3 feet below the ground surface.

The geophysical line (Line 12, Appendix B) conducted at the site indicates that the alluvial deposits are generally stiff and dense, with shear wave velocity values that exceed 1,200 feet per second (ft/s), and gradually increase with depth. Based on the seismic velocity measurements obtained, the alluvial deposits have a site-specific $V_{S,30}$ of 1,556 ft/s (474 meters per second [m/s]).

4.4 Arroyo Reservoir

The site is underlain by very old axial-valley deposits, Unit 3 (Qvoa3) that mantle the underlying San Timoteo formation (QTstu). These very old axial-valley deposits are described as "moderately to well consolidated silt, sand, and gravel" (Matti et al, 2003a). Based on our hand auger exploration (HA-14), the soils consist of yellowish-brown silty sand with trace amounts of gravel. Some local fill

may be present as part of the original site grading; however, it is not distinguished from the axial-valley deposits at the site.

The geophysical survey (Line 9, Appendix B) conducted at the site indicates the near-surface soils are relatively weathered in the upper 5 to 10 feet. The shear wave velocities vary from approximately 900 to 1,000 ft/s, but do not increase much with depth. The seismic refraction survey indicates that the weathering may be deeper closer to the top of the slopes (on either side of the tank). Based on the seismic velocity measurements obtained, the site-specific $V_{S,30}$ is 1,013 ft/s (309 m/s).

4.5 Country Club 1 & 2 Reservoirs

The Country Club site is underlain by very old axial-valley deposits, Unit 3 (Qvoa3), which have been locally excavated and replaced with compacted fill as part of the site development. Based on our hand auger exploration (HA-12), the fill soils consist of grayish brown silty sand.

The geophysical survey conducted at the site (Line 5, Appendix B) indicates the near surface fill soils range in depth from about 3 to 6 feet. Below the fill, the native axial-valley deposits are present, with shear wave velocities ranging from about 850 ft/s to over 1,600 ft/s. The soils become dense and less weathered below a depth of about 12 feet below grade. Based on the seismic velocity measurements obtained, the site-specific $V_{S,30}$ is 1,339 ft/s (408 m/s).

4.6 Crafton Hills Reservoir

The Crafton Hills site is underlain by foliated granitoid rock (Mzfg) (Matti et al, 2003b). Based on our hand auger exploration (HA-9), the near-surface soils consist of brown, poorly-graded sand with silt and gravel. Refusal on hard rock was encountered at a depth of 1 foot.

The geophysical survey conducted at the site (Line 2, Appendix B) indicates that the underlying granitoid rock may be slightly weathered in the upper 10 to 15 feet, with shear wave velocity values between about 1,300 ft/s and 1,400 ft/s. Below a depth of 18 feet, the shear wave velocities increase to range from approximately 1,650 ft/s to 2,500 ft/s. Based on the seismic velocity measurements obtained, the site-specific $V_{S,30}$ is 1,978 ft/s (603 m/s).

4.7 Dearborn Reservoir

The site is mapped within alluvial soils that may consist of a mix of Holocene-aged very young wash deposits (Qvyw) and young axial-valley deposits (Qya3), or Pleistocene-aged very old axial-valley deposits (Qvoa3). Three CPT soundings were performed at the site (SCPT-6, SCPT-6A, and SCPT-7), with refusals encountered at depths from about 6 to 11 feet below the existing grades. The CPT penetration resistance correlations indicate that the near surface soils consist of silty sand and sand. Based on our hand auger samples, the soils consist of dark grayish brown silty sand, with trace amounts of gravel, which is consistent with the CPT findings. Review of available maps in the City of Redlands indicates that the site is located near an old river, the Zanja River, which is currently a concrete-lined channel south of the site. This suggests that larger gravels and cobbles

likely underlie the near-surface sandy soils at the site, and due to the repeated shallow refusals, may be laterally continuous.

Since shallow CPT refusals were encountered, a geophysical survey (Line 8, Appendix B) was also performed across the site. Shear wave velocities indicate the soils are generally stiff and dense, with a relatively uniform value around 1,200 ft/s in the upper 35 feet. Below 35 feet, the shear wave velocities increase with depth to a maximum of nearly 1,800 ft/s. Based on the seismic velocity measurements obtained, the resulting average $V_{S,30}$ is 1,380 ft/s (421 m/s).

4.8 Fifth Avenue Reservoir

The Fifth Avenue site is mapped within very old axial-valley deposits, Unit 3 (Qvoa3). Based on our hand auger boring (HA-10), the soils consist of yellowish-brown silty sand with trace amounts of gravel. The geophysical survey conducted at the site (Line 3, Appendix B) indicates that the upper 3 to 8 feet at the site are more disturbed and/or less dense (likely fill). Below 10 feet, the shear wave velocities increase with depth, indicating the soils increase in stiffness and become denser, with shear wave velocities ranging from about 900 ft/s to about 1,400 ft/s. Based on the seismic velocity measurements obtained, the resulting average $V_{S,30}$ is 1,156 ft/s (352 m/s).

4.9 Highland Avenue Reservoir

The Highland Avenue site is mapped as a combination of very young wash deposits (Qvyw) and very old axial-valley deposits, Unit 3 (Qvoa3). The wash deposits are described as “very slightly consolidated sand and gravel deposits in active washes” (Matti et al, 2003a). Based on the hand auger boring (HA-7), the near-surface soils consist of brown silty sand with trace amounts of gravel. At the site, two CPT soundings were performed (SCPT-8 and SCPT-9), one near the pump station with a maximum depth of 65 feet below grade, and one near the reservoir with a maximum depth of 20 feet below grade. Based on CPT penetration resistance correlations, the near surface soils are generally silty sand and sandy silt, with minor amounts of clay. Subsurface conditions were found to be similar in both CPTs. At a depth of about 15 to 20 feet below grade, the soil becomes predominantly sand and silty sand, with increased penetration resistances and shear wave velocity measurements, indicating stiffer and denser soils. Based on the seismic velocity measurements obtained, the resulting average $V_{S,30}$ is 1,295 ft/s (395 m/s).

4.10 Margarita Reservoir

The Margarita Reservoir site is underlain by very old axial-valley deposits (Qvoa3). Existing boring records describe the soils as compact clayey sand and silty sand, underlain by dense to very dense sand and gravel at depths of about 5 feet to 15 feet across the site.

The geophysical survey conducted at the site (Line 6, Appendix B) indicates that the underlying soils become denser below a depth of about 12 feet, with shear wave velocities from about 1,150 ft/s to nearly 1,350 ft/s. Below 50 feet, the shear wave velocities jump up (1,488 to 1,768 ft/s), suggesting

an increase in stiffness and potentially a geologic contact. Based on the seismic velocity measurements obtained, the resulting average $V_{S,30}$ is 1,403 ft/s (427 m/s).

4.11 Mill Creek 1 & 2 Reservoirs

The Mill Creek site is underlain by Pleistocene-aged old alluvial fan deposits, Unit 2 (Qof2). These deposits are described as "moderately to well consolidated silt, sand and gravel" (Matti et al, 2003b). Based on the hand auger boring (HA-15), the soils encountered consist of silty sand with gravel.

The geophysical survey conducted at the site (Line 10, Appendix B) indicates that the upper 10 to 12 feet has lower shear wave velocities (about 650 to 750 ft/s) and may consist of fill. Below that depth, the soils begin to increase in stiffness, and may be medium dense to dense, with shear wave velocities ranging from nearly 900 ft/s to 1,290 ft/s. Based on the seismic velocity measurements obtained, the resulting average $V_{S,30}$ is 1,106 ft/s (337 m/s).

4.12 Sand Canyon Reservoir

The Sand Canyon site is underlain by foliated granitoid rock (Mzfg) (Matti et al, 2003b). Based on our hand auger exploration (HA-8), the near-surface soils consist of yellowish-brown, sand with gravel. Refusal on hard rock was encountered at a depth of 1 foot.

The geophysical survey conducted at the site (Line 1, Appendix B) indicates that the upper 20 to 25 feet have shear wave velocities more consistent with soil (likely fill) and/or weathered rock, since they range from about 950 ft/s to 1,170 ft/s. Below 25 feet, the shear wave velocity values increase from about 1,350 ft/s to about 2,350 ft/s, indicating the rock is becoming less weathered with depth. Based on the seismic velocity measurements obtained, the resulting average $V_{S,30}$ is 1,540 ft/s (469 m/s).

4.13 Smiley Reservoir

The Smiley Reservoir site is underlain by very old axial-valley deposits (Qvoa3) and may at depth be underlain by the San Timoteo Formation (QTstu). Based on the hand auger boring (HA-13), the near-surface soils consist of dark yellowish-brown silty sand with gravel.

The geophysical survey conducted at the site (Line 7, Appendix B) indicates that the upper 10 feet may be slightly weathered, with shear wave velocities below 1,200 ft/s. Below a depth of about 10 to 15 feet, the soils become stiffer and denser with increasing shear wave velocities that range between about 1,200 ft/s and 1,400 ft/s. Based on the seismic velocity measurements obtained, the resulting average $V_{S,30}$ is 1,377 ft/s (420 m/s).

4.14 South Reservoir

The South reservoir site is mapped near the boundary of very young wash deposits (Qvyw) and very old axial-valley deposits, Unit 3 (Qvoa3). Based on the hand auger boring (HA-4), the near surface soils consist of reddish-brown silty sand with gravel. One CPT sounding (SCPT-4) was performed to

the north of the tank to a maximum depth of about 61 feet below grade. CPT penetration resistance correlations indicate the site is underlain primarily by sand and silty sand to the depths explored. The upper 10 to 15 feet had lower tip resistances and sleeve friction, but below 15 feet the soils become much denser and stiffer (potentially indicating a geologic transition to an older formation). Based on the seismic velocity measurements obtained, the resulting average $V_{S,30}$ is 1,615 ft/s (492 m/s).

4.15 Sunset Reservoir

The Sunset site is mapped as being underlain by Pleistocene-aged San Timoteo beds of Frick (QTstu) (Matti et al, 2003a). Based on the hand auger boring (HA-11) the near-surface soils consist of brown silty sand.
A geophysical survey was performed at the site (Line 4, Appendix B) and found the subsurface soils to be highly weathered, particularly in the upper 10 feet, with shear wave velocities ranging from 700 to 750 ft/s. Between a depth of 10 and 50 feet, the shear wave velocities increase slightly with depth from about 800 ft/s to about 1,200 ft/s. Based on the seismic velocity measurements obtained, the resulting average $V_{S,30}$ is 1,080 ft/s (329 m/s).

4.16 Texas Grove Reservoir

The Texas Grove site is mapped as Holocene-aged Young Axial Valley deposits, Unit 3 (Qya3), which are described as “slightly to moderately consolidated silt, sand and gravel deposits” (Matti et al, 2003a). Based on the hand auger boring (HA-5), the soils encountered consist of grayish brown silty sand. One CPT sounding (SCPT-5) was performed south of the tank to a maximum depth of 100 feet below grade. CPT penetration resistance correlations indicate that the site is underlain by medium dense to dense sand to the depths explored. Based on the seismic velocity measurements obtained, the resulting average $V_{S,30}$ is 1,039 ft/s (317 m/s).

4.17 Texas Street Reservoir

The Texas Street site is mapped as Holocene-aged Young Axial Valley deposits, Unit 3 (Qya3). Based on the hand auger boring (HA-3), the soils encountered consist of dark grayish brown poorly-graded sand with silt. One CPT sounding (SCPT-3) was performed west of the tank to a maximum depth of about 85 feet below grade. CPT penetration resistance correlations indicate that the upper 5 to 10 feet consists of loose to medium dense sand and sandy silt. Below a depth of about 10 feet, the site is underlain by primarily by medium dense to dense sand with some interbedded layers of sandy silt to the depths explored. Based on the seismic velocity measurements obtained, the resulting average $V_{S,30}$ is 1,114 ft/s (340 m/s).

4.18 Ward Way Reservoir

The Ward Way site is mapped as Holocene-aged Young Axial Valley deposits, Unit 3 (Qya3). Based on our explorations at the site (CPT-1, CPT-1A, CPT-1B, and HA-1) and the observations of the surface soils exposed, the near-surface soils consist of dark brown silty sand that contains gravels,

cobbles, and boulders. Three CPTs were attempted, but refusal was encountered on cobbles and boulders between about 0.5 and 3 feet below the ground surface.

The geophysical line conducted at the site (Line 11, Appendix B) indicates that the alluvial deposits are generally stiff and dense, with shear wave velocity values that exceed 1,200 ft/s and increase slightly with depth. Based on the seismic velocity measurements obtained, the resulting average $V_{S,30}$ is 1,416 ft/s (432 m/s).

5.0 SEISMICITY

5.1 Seismic Setting

The City of Redlands is located in an area with very high seismic activity. There are numerous faults in the site vicinity, including two of the most active faults in California, the San Andreas fault zone and the San Jacinto fault zone. These two fault zones consist of multiple fault segments and branches that have the potential for larger earthquakes when they rupture in combination. Nearby faults are described in more detail below. A regional fault map is shown in Figure 4.

San Andreas Fault Zone

The San Andreas fault zone is a right-lateral strike slip fault system that extends a total length of 315 miles (1,200 kilometers [km]) through California. This fault system forms the boundary between the Pacific Plate and the North American Plate. The Southern San Andreas section of the fault system extends from Parkfield down to its termination at the Salton Sea, with a length of 550 km. The Southern San Andreas section is estimated to be capable of producing earthquakes with a maximum magnitude (M_W) of 8.2. In the area of Redlands and Yucaipa, the structure of the San Andreas fault becomes very complex where it has interacted with other faults over the millennia, resulting in fractured segments and discontinuous branches. Recurrence intervals between ground-rupturing earthquakes vary on the San Andreas fault system depending on location. Near Redlands this interval is estimated to be 175 to 200 years (USGS, 2017).

San Jacinto Fault Zone

The San Jacinto fault zone is a right-lateral strike slip fault with a total length of about 210 km, extending from San Bernardino down to Superstition Mountain. At the northern end of the fault, it connects with the San Andreas fault zone. It is estimated to be capable of producing earthquakes with a maximum magnitude (M_W) of 7.8 when all of the segments rupture in combination from San Bernardino to Superstition Mountain. The San Jacinto fault has a typical recurrence interval for ground-rupturing earthquakes of 100 to 300 years.

Crafton Hills Fault Zone

The Crafton Hills fault zone is between the San Andreas and the San Jacinto fault zones. It is an extensional fault zone comprising a series of normal oblique faults that have developed from movement of the two adjacent major faults. This fault system consists of a number of segments of smaller faults that are each about 10 km in length or less. Some segments of the Crafton Hills fault

system have been considered active faults, while others have been (until recently) considered only "potentially active" due to limited available information.

Caltrans has previously considered the Crafton Hills fault as active, with a maximum magnitude (M_W) of 6.4. Currently, the USGS National Seismic Hazard Map (NSHM) program has not included this fault zone in their latest adopted seismic source model (2014) that is included in ASCE 7-16, as shown in Figure 5A. However, review of the available provisional fault map for the 2023 NSHM suggests that in the next edition, the USGS will be adopting two new faults into the seismic source model (Figure 5B) to represent the faulting in the Crafton Hills: the Reservoir Canyon fault and the Crafton Hills fault. This next edition will ultimately be incorporated into subsequent building code editions in the following years.

5.2 Historic Seismicity

Given the proximity of the sites to the San Jacinto and San Andreas fault systems, there have been a number of moderate to large earthquakes that have occurred close to the City of Redlands. A historical earthquake search was performed using the Advanced National Seismic System (ANSS) Comprehensive Earthquake Catalog (ComCat) (USGS, 2021). This search included earthquakes with magnitudes 5.0+ with epicentral distances of 150 km of the center of the project sites in Redlands (approximately at the location of Dearborn Reservoir). Results are summarized below.

Time Period (1700 to August 2021)	321 years
Maximum Magnitude	7.5
Number of Events Exceeding Magnitude 5.0 Within 150 km	125

The earthquakes with epicenters closest to the City of Redlands water facilities are the 1923 magnitude 6.0 Greater Los Angeles Area earthquake south of Redlands, the 1880 magnitude 5.9 earthquake near Yucaipa, and the 1858 magnitude 6.0 earthquake near San Bernardino, northwest of Redlands. The epicenters of these three earthquakes are shown in Figure 6.

The following table lists historic earthquakes within 150 km of Redlands earthquakes with magnitudes greater than 6.5. Where information is known for an earthquake based on strong ground motion recording stations and/or sensed and observed data near Redlands, the approximate horizontal Peak Ground Acceleration (PGA) and the Modified Mercalli Intensity (MMI) is listed as well.

Earthquake	Fault(s)	M_W	Date	Distance of Epicenter from Redlands (km)[1]	MMI [2]	PGA (g) [2]
Wrightwood	San Andreas	7.5	12/8/1812	57.8	-	-
Landers, CA	Johnson Valley, Landers, Homestead Valley, Emerson, Camp Rock	7.3	6/28/1992	67.2	VI	0.14g
Hector Mine, CA	Lavic Lake, Bullion	7.1	10/16/1999	101.0	V	0.05g
Southern California	San Jacinto	6.8	4/21/1918	36.9	V - VI	-
Southern California	San Jacinto	6.8	12/25/1899	31.8	-	-
Northeastern San Diego County	San Jacinto or Elsinore	6.8	2/9/1890	79.9	-	-
Northridge, CA	Northridge	6.7	1/17/1994	129.5	IV - V	0.05 - 0.08g
San Fernando	San Fernando	6.6	2/9/1971	119.5	V	0.06g
Borrego Mountain	Coyote Creek (San Jacinto fault zone branch)	6.6	4/8/1968	137.4	V - VI	0.05 – 0.1g

Notes: (1) Dearborn Reservoir used as central site for approximate distance measurements
(2) Estimated values obtained from the USGS ShakeMaps

Although not included in the table above since the distance to the epicenter is greater than 150 km, the last large rupture of the Southern San Andreas (the 1857 Fort Tejon Earthquake) also would have generated strong ground shaking in the City of Redlands. The rupture occurred on January 9, 1857, with an estimated magnitude of 7.9. The epicenter is estimated to be just south of Parkfield, about 340 km from Redlands. However, the total rupture length is an estimated 360 km between Parkfield and Wrightwood, resulting in significant ground motions throughout Central and Southern California. Maximum surface fault rupture was about 9 meters (30 feet) north of Fort Tejon, and shaking was estimated to last between 1 to 3 minutes depending on the location near the fault.

According to historical records from the nearby San Bernardino Mission, walls cracked in most houses, agitated water in the streams produced waves several feet high, and people were disoriented and dizzy during the shaking and rolling ground. Note that MMI is developed from these types of experiences and observations. In addition, six aftershocks were felt within the week following the main shock.

6.0 GEOLOGIC AND SEISMIC HAZARDS

This section discusses the potential geologic and seismic hazards at the sixteen City of Redlands reservoir sites based on our site visits, subsurface explorations, geophysical surveys, and review of the San Bernardino County Countywide Policy Plans (2020) and other available geotechnical and

geologic maps and data. The primary geologic hazard at all sites is the potential for strong ground motion due to nearby earthquakes. Other geologic hazards include earthquake surface fault rupture, liquefaction, landslide and slope instability, and flooding. Table 1 summarizes our opinion of the potential for each geologic hazard to occur at the reservoir sites. Note that a detailed analytical evaluation of these hazards is outside the scope of our evaluation; this is a screening-level assessment of the potential geologic and seismic hazards at each site. Each of the geologic and seismic hazards is described below.

6.1 Strong Ground Motion

The primary geologic hazard at the site is the potential for strong ground motion from nearby or distant, large magnitude earthquakes during the expected continued life span of these reservoirs and facilities. Numerous faults are located in close proximity to the site, which are sources of strong ground motion, as shown in Figures 4, 5A, and 5B. Both the nearby San Andreas fault zone and San Jacinto fault zone are active sources of faulting, along with the Crafton Hills fault zone and the San Gorgonio Pass fault to the southeast. Active faults near the sites, along with their site-to-source rupture distances, maximum magnitudes, and rupture mechanism are presented in Appendix D.

This hazard is managed through the seismic and structural evaluation and design in accordance with ASCE 7-16, and the 2019 California Building Code. Seismic parameters and ground motion recommendations are provided in the *Recommendations* section of this report (Section 7.1).

6.2 Earthquake Surface Fault-Rupture Hazard

Surface rupture is the result of movement on an active fault reaching the ground surface. The State of California defines active faults as “Holocene-active faults” that have ruptured in the last approximately 11,700 years. As shown on Figure 7, none of the reservoir and pump station sites or the two transmission mains are located within a State of California Alquist-Priolo Earthquake Fault Zone. Alquist-Priolo (A-P) Earthquake Fault Zones require a special study for new structures, which is a site-specific surface fault rupture investigation. The requirements for this special study are governed by the California Public Resources Code (CPRC), Division 2, Chapter 7.5. However, San Bernardino County also has adopted County Fault Zones in addition to the A-P Earthquake Fault Zones.

The site of the Fifth Avenue reservoir and pump station is located within a County Fault Zone for the Reservoir Canyon fault, which was adopted in the Countywide Policy Map in October 2020. As shown in Figure 8A, the edge of the County Fault Zone passes through the middle of the Fifth Avenue property. The Reservoir Canyon fault is a normal fault that is part of the Crafton Hills fault zone. The fault trace is mapped about 400 feet away from the closest location to the Fifth Avenue reservoir (Figure 8B). Therefore, there may be potential for surface rupture, or associated off-fault deformations at the site from movement of the Reservoir Canyon fault reaching the ground surface at the Fifth Avenue site.

The County of San Bernardino Development Code, Chapter 82.15.040 (b) requires that a structure used for critical facilities (such as a reservoir) be located 150 feet or farther from any active earthquake fault trace. Additionally, the San Bernardino County-Wide Plan (County of San Bernardino, 2020) for mitigation of natural environmental hazards states in Policy HZ-6:

"We require new critical and essential facilities to be located outside of hazard areas, whenever feasible."

Per Table S-2 of the County of San Bernardino General Plan, Land Use Compatibility Chart in Fault Hazard Zones, essential land uses are "restricted" in fault hazard zones, which is defined as:

"Restricted unless alternative sites are not available or feasible and it is demonstrated through a site investigation that, although mitigation may be difficult, hazards will be adequately mitigated."

However, the restricted use and requirements for earthquake fault zones have generally applied to new structures or for any existing structures where the alterations/additions to the structure are greater than 50 percent of the value of the structure. Since the Fifth Avenue reservoir was constructed in 1974, it may be exempt from meeting the requirements for special studies within a fault zone under the condition that any improvements are less than 50 percent of the value.

Note that future major rehabilitation to the Fifth Avenue reservoir, or new structures or improvements will likely require a site-specific surface fault rupture investigation performed in accordance with California Geological Survey (CGS) Note 49, *Guidelines for Evaluating the Hazard of Surface Fault Rupture*.

6.3 Liquefaction

Liquefaction is the sudden loss of soil shear strength within saturated, loose to medium dense, sands and non-plastic silts. Liquefaction is caused by the build-up of pore water pressure during strong ground motion from an earthquake. Secondary effects of liquefaction are sand boils, settlement and instabilities within sloping ground that occur as lateral spreading, seismic deformation and flow sliding. For liquefaction to occur, three conditions must simultaneously exist: loose to medium dense granular soils, saturation of the soils by groundwater (typically upper 50 feet), and strong earthquake ground motion.

Review of available groundwater wells and boring records (USGS,2021b; Conestoga-Rovers Associates, 2011-2014) in Redlands indicates that groundwater is very deep (generally about 70 feet deep or greater and in some areas over 200 feet below the ground surface), therefore the potential for liquefaction should be very low in the City of Redlands.

Liquefaction Hazard Zones mapped by the County of San Bernardino are presented in Figure 9. Among all sixteen reservoir sites, only the Ward Way reservoir is mapped in a high liquefaction potential zone. This site is discussed separately below.

Ward Way Reservoir and Pump Station

The site is underlain by sand, gravels, and cobbles, and shallow refusal was encountered within our CPT explorations. Shear wave velocity measurements at Ward Way range from about 1,200 ft/s to nearly 1,500 ft/s. These values are relatively high for alluvial soils, suggesting the soils are competent and contain more gravel and cobbles. These soils should be less susceptible to liquefaction.

Review of groundwater levels in the Santa Ana River and Mill Creek to the northwest of the site (USGS, 2021b; EMI, 2013) indicates that while groundwater is generally deep, some transient shallow groundwater levels may reach 10 to 20 feet below the ground surface within a few miles of Ward Way.

Considering the subsurface conditions and high shear wave velocities, the liquefaction potential at the Ward Way Tank site should be low.

6.4 Seismic Compaction

Seismic compaction is the densification of loose to medium dense granular soils that are above groundwater. The compaction is caused by strong ground motion from an earthquake. Subsurface conditions interpreted below most of the reservoir foundations were generally competent older alluvial deposits or formation that should not be susceptible to seismic compaction. However, at some of the sites, there are near surface dry sandy and silty soils may experience some seismic compaction. These are discussed separately below.

Texas Street Reservoir and Pump Station

Some loose to medium dense sand and silty sands were interpreted in the upper 10 to 15 feet in SCPT-3 at the Texas street reservoir and pump station. There is the potential for some dry sand settlement below the foundations in that zone. Both the reservoir and the pump station structure are supported on shallow foundations that may be subject to adverse differential settlement within the dry sand.

Highland Avenue Reservoir and Pump Station

The Highland Avenue site has some looser near-surface soils that based on the geology maps are likely younger wash deposits. The reservoir is embedded 20 to 25 feet below grade and is supported by supported by underlying denser soils, and therefore and should not be susceptible to seismic compaction. However, the pump station building is supported on shallower foundations that may be subject to adverse differential settlement within the dry sand.

South Reservoir and Pump Station

Some loose sand and silty sand were present in the upper 10 to 15 feet in SCPT-4, which is located to the north of the existing tank. Although the pad for the reservoir and pump station is predominantly in cut, a minor amount of fill may have been placed at the north end of the site for road access. Furthermore, the mapped geology indicates there may be young wash deposits near the surface.

With over 10 feet of cut in the footprint of the pump station, the potential for adverse differential settlement in dry sand below the pump station building is anticipated to be low. However, the potential for adverse differential settlement under earthquake shaking below the tank foundation will depend on the extent in which grading activities for development removed any loose soil below the tank.

Sunset Reservoir

The Sunset reservoir was constructed on a cut/fill hillside transition with cut on the south side and up to about 12 feet of new fill placed on the north side of the site. Deformations in hillside structures on cut and fill were observed during the 1994 Northridge earthquake (Stewart et al, 2002). Depending on the level of remedial grading and fill compaction and placement, the site may be susceptible to differential settlement and downslope movement associated with seismic compaction of the fill.

6.5 Landslides and Slope Instability

Landslides are large scale or regional movements of soil and rock, typically down a hillside or mountain. Slope instability may be more local or specific to a site and its development (such as walls, graded slopes, cut/fill transitions, etc.).

Landslide Hazard Zones mapped by the County of San Bernardino, as well as locations of Mapped Existing Landslides, are shown in Figure 9. As shown in the figure, many of the reservoir and pump station sites are located in the valley areas with level ground, where there is no risk of landslides and slope failures, including Highland, Texas Street, Texas Grove, Agate, Ward Way, Dearborn, and Fifth Avenue. Other tanks fall within zones labeled “low to moderate” or “moderate to high” susceptibility, depending on the steepness of the slopes and underlying geology.

No evidence of ancient landslides, slope failures, or mapped existing landslides were identified during our literature review at or near any of the sites. In our opinion, the potential for large scale slope failures and landslides may be relatively low at most sites, but there may be a potential for slope instabilities at a few. These are discussed further below.

South Reservoir and Pump Station

There may be potential for erosion failures and continued “nuisance” level slope management in the cut slopes on the south, east and west sides. Based on a review of the as-built plans, the original site would have been in a small canyon or natural drainage area. To accommodate the level grade for the tank and pump station, the grades were cut down with slopes on the east, south and west sides of the tanks. A retaining wall was built along the west to support the access roadway. In 2009, new retaining walls were installed on the eastern side of the property. Signs of erosion from the slopes above the wall at the eastern side of the site were observed during our site visit, with some minor dirt visible in the roadway.

Sunset Reservoir

The site for the Sunset reservoir is at the top of a hillside, mapped as “moderate to high” landslide susceptibility in the Countywide Landslide Hazard Map (Figure 8). The site is underlain by highly

weathered sedimentary formational soils, as observed by our field investigation and shear wave velocity measurements. Historical satellite images from March 2011 indicate that the slopes are susceptible to erosion and surficial failures, as evidenced by numerous erosion scars (Figure 10). In addition, the site was graded as a cut/fill transition lot with thicker fill on the north side, and the amount of remedial grading is unknown. Based on these conditions, the Sunset reservoir site may be more vulnerable to slope instabilities.

6.6 Tsunamis and Seiches

Due to the distance from the coast, and site elevations more than 1,000 feet above sea level, tsunami risks and seiche risks at the sites are considered negligible.

6.7 Flood

Review of Flood Hazards mapped by the county (Figure 11) indicates that only Dearborn Tank is located within the FEMA 100-Year flood zone. The flood hazard at Dearborn Tank is considered moderate, and low at all other sites.

7.0 GEOTECHNICAL RECOMMENDATIONS

For structural and seismic evaluation of the existing reservoirs and pump stations, the recommendations in the following sections may be used.

7.1 Seismic Design Parameters

Site-specific seismic hazard analyses were performed for each of the sixteen reservoir sites to develop seismic design parameters and site-specific Acceleration Response Spectra (ARS) for each site. These were performed in accordance with the 2019 California Building Code and ASCE 7-16 and included recent updates as appropriate (such as inclusion of the Crafton Hills fault zones faults). Details of the analyses are presented in Appendix D along with the results.

The table below summarizes the Site Class in accordance with Chapter 20 of ASCE 7-16 and site-specific seismic design parameters from these analyses for each reservoir site. Site-specific ARS curves and tabulated values are included in Appendix D.

Reservoir	$V_{S,30}$ (ft/s)	Site Class (ASCE 7-16)	S_{MS}	S_{M1}	S_{DS}	S_{D1}
Agate	474	C	2.598	1.386	1.732	0.924
Arroyo	309	D	2.377	2.105	1.585	1.403
Country Club 1 & 2	408	C	2.048	1.480	1.365	0.987
Crafton Hills	603	C	2.214	1.038	1.476	0.692
Dearborn	421	C	2.279	1.400	1.520	0.933
Fifth Avenue	352	D	2.142	1.600	1.428	1.067
Highland	395	C	2.237	1.420	1.491	0.947
Margarita	427	C	2.087	1.460	1.391	0.973
Mill Creek 1 & 2	337	D	2.609	1.928	1.739	1.286
Sand Canyon	469	C	2.263	1.177	1.509	0.785
Smiley	420	C	2.483	1.612	1.655	1.075
South	492	C	2.385	1.001	1.590	0.667
Sunset	329	D	2.068	1.560	1.379	1.040
Texas Grove	317	D	2.261	2.062	1.507	1.374
Texas Street	340	D	2.198	1.921	1.466	1.281
Ward Way	432	C	2.564	1.572	1.710	1.048

7.2 Existing Foundations

For evaluation of existing shallow foundations, the allowable bearing capacities listed in the following table may be used for each site. The allowable bearing pressure may be increased by one-third for wind or seismic loading.

Lateral loads against the structure may be resisted by friction between the bottoms of the footings and underlying soil, and limited passive pressures where foundations have sufficient embedment to capture passive resistance. The allowable coefficient of friction is listed in the following table. Allowable passive pressures, for the applicable sites, are provided in Section 7.3.

Reservoir	Allowable Bearing Pressure (psf)	Allowable Coefficient of Friction
Agate	2,000	0.3
Arroyo	2,000	0.25
Country Club 1 & 2	4,000	0.35
Crafton Hills	4,000	0.35
Dearborn	4,000 / 2,000 (1)	0.35
Fifth Avenue	3,000 / 1,500 (1)	0.3 / 0.25 (1)
Highland	4,000 / 1,500 (1)	0.35 / 0.25 (1)
Margarita	4,000	0.35
Mill Creek 1 & 2	2,000	0.25
Sand Canyon	4,000	0.35
Smiley	2,500	0.3
South	2,000	0.25
Sunset	2,000	0.25
Texas Grove	4,000	0.35
Texas Street	2,000	0.25
Ward Way	2,000	0.30

Notes: (1) Reservoir foundation / pump station foundations

7.3 Earth Retaining Pressures

For evaluation of the lateral earth pressures at the buried concrete reservoirs, the following parameters may be used.

Reservoir	Total Soil Unit Weight (pcf)	At-Rest Equivalent Fluid Pressure (pcf) [1]	Passive Earth Pressure (pcf)	Seismic Earth Pressure Increment (pcf) [2]
Country Club	120	55	350	7
Dearborn	120	55	350	9
Fifth Avenue	120	60	300	11
Highland	120	55	350	7
Margarita	120	55	350	7

Notes: (1) Restrained wall earth pressures, level backfill
(2) Seismic earth pressure increment should be applied as a triangular distribution with resultant force at H/3 from the bottom of the wall.

8.0 LIMITATIONS

This report was prepared to support the structural and seismic evaluation of the existing reservoir. For design of new facilities at these sites, additional geotechnical services may be necessary to support design recommendations. This report was prepared using the degree of care and skill ordinarily exercised, under similar circumstances, by reputable geotechnical consultants practicing in similar localities. No warranty, express or implied, is made as to the conclusions and professional opinions included in this report.

The findings of this report are valid as of the present date. However, changes in the condition of a property can occur with the passage of time, whether due to natural processes or the work of humans on this or adjacent properties. In addition, changes in applicable or appropriate standards of practice may occur from legislation or the broadening of knowledge. Accordingly, the findings of this report may be invalidated wholly or partially by changes outside our control. Therefore, this report is subject to review and should not be relied upon after a period of three years.

9.0 REFERENCES

American Society of Civil Engineers (ASCE). (2016). Minimum Design Loads for Buildings and Other Structures, ASCE 7-16.

Black and Veatch (2010). *Replacement of Country Club Reservoir No. 1, Project No. 1-0972, Sheets 1 through 16*, prepared for the City of Redlands, Municipal Utilities and Engineering Department.

California Building Standards Commission (CBSC), (2019). *2019 California Building Code (CBC)*, California Code of Regulations, Title 24, Part 2, Volumes 1 and 2, dated: July 1.

California Geological Survey (CGS) (2002). *Guidelines for Evaluating the Hazard of Surface Fault Rupture*, Note 49.

City of Redlands (1964). *Grading Plan, Smiley Heights Reservoir*, City of Redlands Department of Public Works, Drawing D-40065.

City of Redlands (1965). *Construction Plans for Arroyo Reservoir @ Elev. 1750*, City of Redlands Department of Public Works, drawing D-40071.

City of Redlands (1967a). *Grading Plan, Agate St. Reservoir Site*, City of Redlands Department of Public Works, drawing D-40094.

City of Redlands (1967b). *Retaining and Ringwall Plan, Agate St. Reservoir Site*, City of Redlands Department of Public Works, drawing D-40095.

City of Redlands (1967c). *Ring Wall and Grading Plan, Sunset Drive Reservoir*, City of Redlands Department of Public Works, drawing D-40089.

City of Redlands (1967d). *Dearborn Reservoir Grading Plan*, City of Redlands Department of Public Works, drawing D-40088.

City of Redlands (1969). *32' x 40' Steel Rigid Frame Building, 5th Ave. Pumping Plant*, City of Redlands Department of Public Works, drawing D-40103-A.

City of Redlands (2011). *Reservoir Recoating & Improvements Project, Texas Street Reservoir, Project No. 71225*, City of Redlands Municipal Utilities and Engineering Department, drawing D-40191.

Dudek & Associates (2004). *1350 Zone Reservoir*, City of Redlands Municipal Utilities Department, drawing D-40178.

Dudek & Associates (2013). *Dearborn Reservoir Rehabilitation, Project No. 71207, October 2013*, prepared for the City of Redlands.

Engineering Science, Inc. (1962a). *Margarita Reservoir Plot Plan*, Sheet 1 of 12, prepared for the City of Redlands, drawing D-40042.

Engineering Science, Inc. (1962b). *Margarita Reservoir Excavation Plan*, Sheet 2 of 12, prepared for the City of Redlands, drawing D-40043.

Engineering Science, Inc. (1962c). *Margarita Reservoir Soil Logs & Subdrainage Plan*, Sheet 3 of 12, prepared for the City of Redlands, drawing D-40044.

Earth Mechanics, Inc. (2013). *Structure Foundation and Geotechnical Report, Garnet Street Bridge Over Mill Creek (Replace), Bridge No. 54C-0420, San Bernardino County, California*, dated November 20, 2013.

Group Delta Consultants (2021). *Scope and Fee Estimate for Geotechnical and HAZMAT Services, Condition, Seismic and Structural Assessment of Portable Water Storage Reservoirs, Pump Stations and Transmission Mains, City of Redlands, California,* Proposal No. SD21-001, initially Dated January 12, 2021, revised on April 9, 2021.

James M. Montgomery Consulting Engineers, Inc. (1969). *Construction of 2.0-MG Country Club Reservoir, Sheets 1 through 5*, prepared for the City of Redlands Department of Public Works, Drawing D-10123.

James M. Montgomery Consulting Engineers, Inc. (1971). *Construction of 10.6 MG Dearborn Reservoir, Vicinity Map, Grading and Paving Plan*, prepared for the City of Redlands Department of Public Works.

James M. Montgomery Consulting Engineers, Inc. (1974). *Proposed Site Development, Highland Avenue Reservoir*, prepared for the City of Redlands Department of Public Works.

Matti, J.C., Morton, D.M., Cox, B.F. and Kendrick, K.J. (2003a). *Geologic map and digital database of the Redlands 7.5'' quadrangle, San Bernardino and Riverside counties, California*, v. 1.0: U.S. Geological Survey Open-File Map OF 03-302, map scale 1:24,000.

Matti, J.C., Morton, D.M., Cox, B.F., Carson, S.E., and Yetter, T.J. (2003b). *Geologic map and digital database of the Yucaipa 7.5'' quadrangle, San Bernardino and Riverside counties, California*, v.1.0: U.S. Geological Survey Open-File Map OF 03-301, map scale 1:24,000.

San Bernardino County (2020). Countywide Policy Plan, Hazards Element Maps, https://www.arcgis.com/apps/webappviewer/index.html?id=d88e2db7ee5649478d70e95c56b0d62d, accessed on May 14, 2021.

Tetra Tech (2020). *2020 Groundwater Monitoring Program Crafton-Redlands Plume San Bernardino County, California*, dated September 2020.

United States Geological Survey (USGS) (2017). *Back to the Future on the San Andreas Fault*, https://www.usgs.gov/natural-hazards/earthquake-hazards/science/back-future-san-andreas-fault?qt-science_center_objects=0#qt-science_center_objects, accessed on June 11, 2021.

United States Geological Survey (USGS) (2021). National Water Dashboard, https://dashboard.waterdata.usgs.gov/app/nwd/

TABLES

Table 1. Geologic and Seismic Hazards

Site	Hazard					
	Strong Ground Motion	Earthquake Surface Fault-Rupture Hazard	Liquefaction	Seismic Compaction	Landslides and Slope Instability	Flood
Agate Reservoir	***High***	Low	Low	Low	Low	Low
Arroyo Reservior	***High***	Low	Low	Low	***Moderate to High*** (3)	Low
Country Club 1 & 2 Reservoirs	***High***	Low	Low	Low	Low	Low
Crafton Hills Reservoirs	***High***	Low	Low	Low	Low	Low
Dearborn Reservoirs & Pump Station	***High***	Low	Low	Low	Low	***Moderate*** (2)
Fifth Avenue Reservoir & Pump Station	***High***	***Moderate to High*** (1)	Low	Low	Low	Low
Highland Avenue & Pump Station	***High***	Low	Low	***Moderate to High*** (4)	Low	Low
Margarita Reservoir	***High***	Low	Low	Low	Low	Low
Mill Creek 1 & 2 Reservoirs	***High***	Low	Low	Low	Low	Low
Sand Canyon Reservoir & Pump Station	***High***	Low	Low	Low	Low	Low
Smiley Reservoir	***High***	Low	Low	Low	***Moderate to High*** (3)	Low
South Reservoir & Pump Station	***High***	Low	Low	***Low to Moderate*** (4)	***Low to Moderate*** (3)	Low
Sunset Reservoir	***High***	Low	Low	***Moderate to High (4)***	***Moderate to High*** (3)	Low
Texas Grove	***High***	Low	Low	Low	Low	Low
Texas Street & BPS	***High***	Low	Low	***Moderate to High (4)***	Low	Low
Ward Way & BPS	***High***	Low	Low	Low	Low	Low

Notes: (1) Fifth Avenue located in a County Fault Zone

(2) Dearborn located in a 100-year flood zone

(3) Susceptibility based on County mapping

(3) Shallow foundations may be susceptible to adverse differential settlement in dry sands, see Section 6.4 for additional details

FIGURES

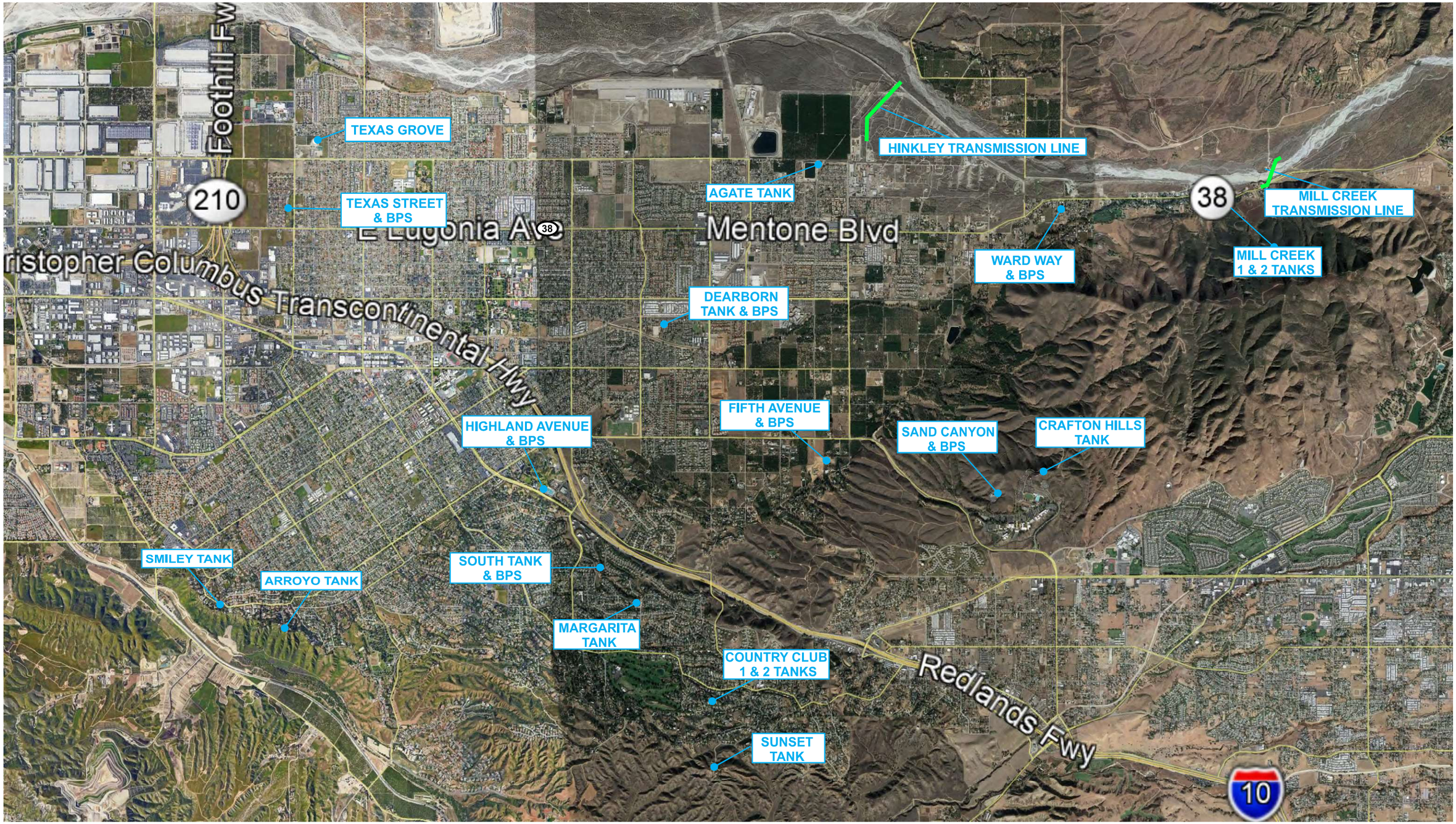

APPROXIMATE SCALE IN MILES

0 1 2

N

PROJECT NAME	FIGURE NAME	GROUP DELTA
CITY OF REDLANDS CONDITION, SEISMIC AND STRUCTURAL EVALUATION OF WATER FACILITIES	SITE LOCATION MAP	PROJECT NUMBER: SD691 / FIGURE NUMBER: 1

REFERENCE: Google Earth (2021).



CPT Location

Hand Auger Location

Multichannel Analysis of Surface Waves (MASW) Test Location

N

No Scale

PROJECT NAME	FIGURE NAME	GROUP DELTA	
CITY OF REDLANDS CONDITION, SEISMIC AND STRUCTURAL EVALUATION OF WATER FACILITIES	EXPLORATION LOCATION MAP AGATE RESERVOIR	PROJECT NUMBER	FIGURE NUMBER
		SD691	2A

REFERENCE: Google Earth (2021).

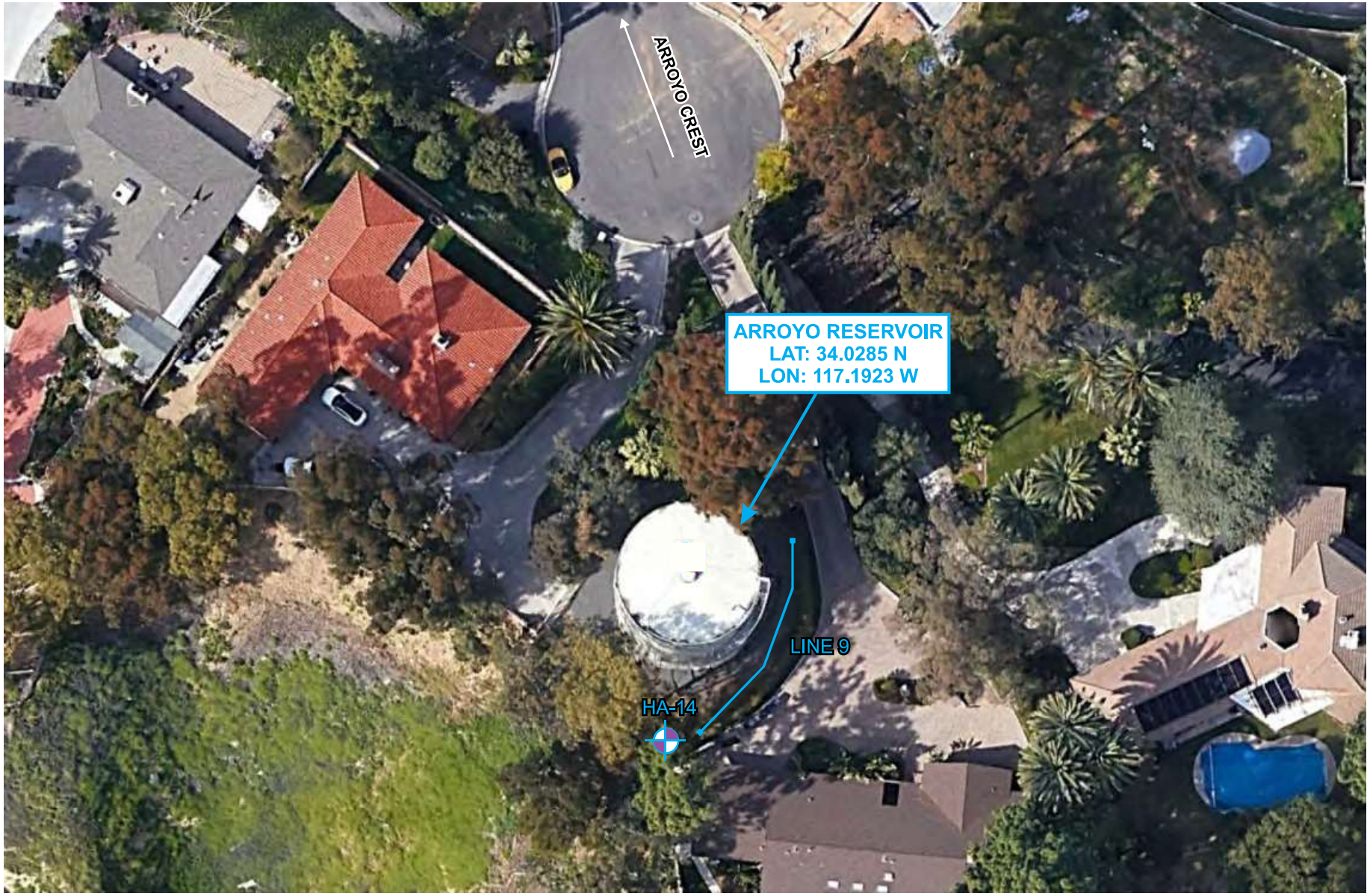

CPT Location

Hand Auger Location

Multichannel Analysis of Surface Waves (MASW) Test Location

N

No Scale

PROJECT NAME	FIGURE NAME	GROUP DELTA	
CITY OF REDLANDS CONDITION, SEISMIC AND STRUCTURAL EVALUATION OF WATER FACILITIES	EXPLORATION LOCATION MAP ARROYO RESERVOIR	PROJECT NUMBER	FIGURE NUMBER
		SD691	2B

REFERENCE: Google Earth (2021).

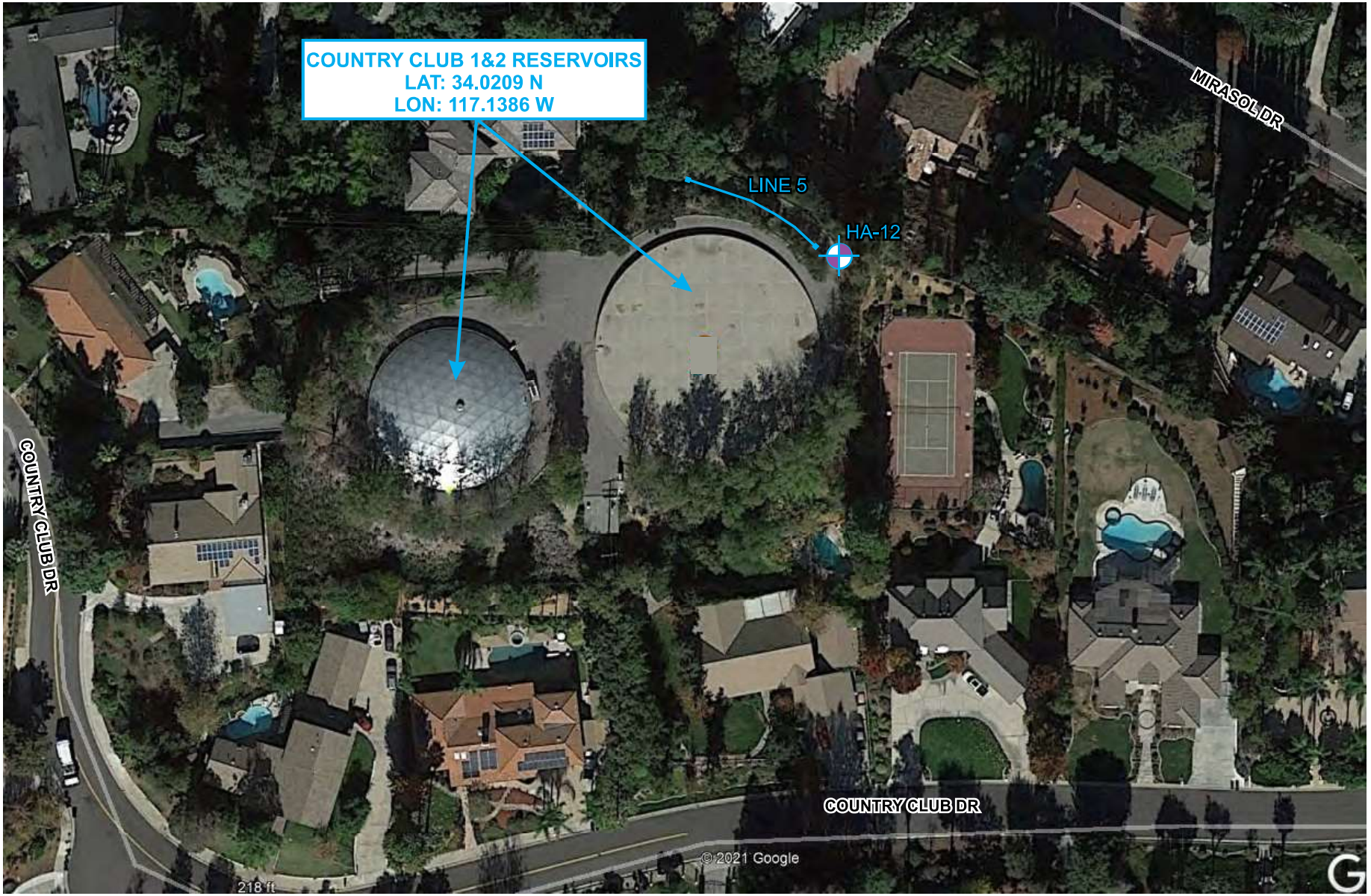

CPT Location

Hand Auger Location

Multichannel Analysis of Surface Waves (MASW) Test Location

N

No Scale

PROJECT NAME	FIGURE NAME	GROUP DELTA	
CITY OF REDLANDS CONDITION, SEISMIC AND STRUCTURAL EVALUATION OF WATER FACILITIES	EXPLORATION LOCATION MAP COUNTRY CLUB 1&2 RESERVOIRS	PROJECT NUMBER SD691	FIGURE NUMBER 2C

REFERENCE: Google Earth (2021).



CPT Location

Hand Auger Location

Multichannel Analysis of Surface Waves (MASW) Test Location

N

No Scale

PROJECT NAME	FIGURE NAME	GROUP DELTA	
CITY OF REDLANDS CONDITION, SEISMIC AND STRUCTURAL EVALUATION OF WATER FACILITIES	EXPLORATION LOCATION MAP CRAFTON RESERVOIR	PROJECT NUMBER	FIGURE NUMBER
		SD691	2D

REFERENCE: Google Earth (2021).

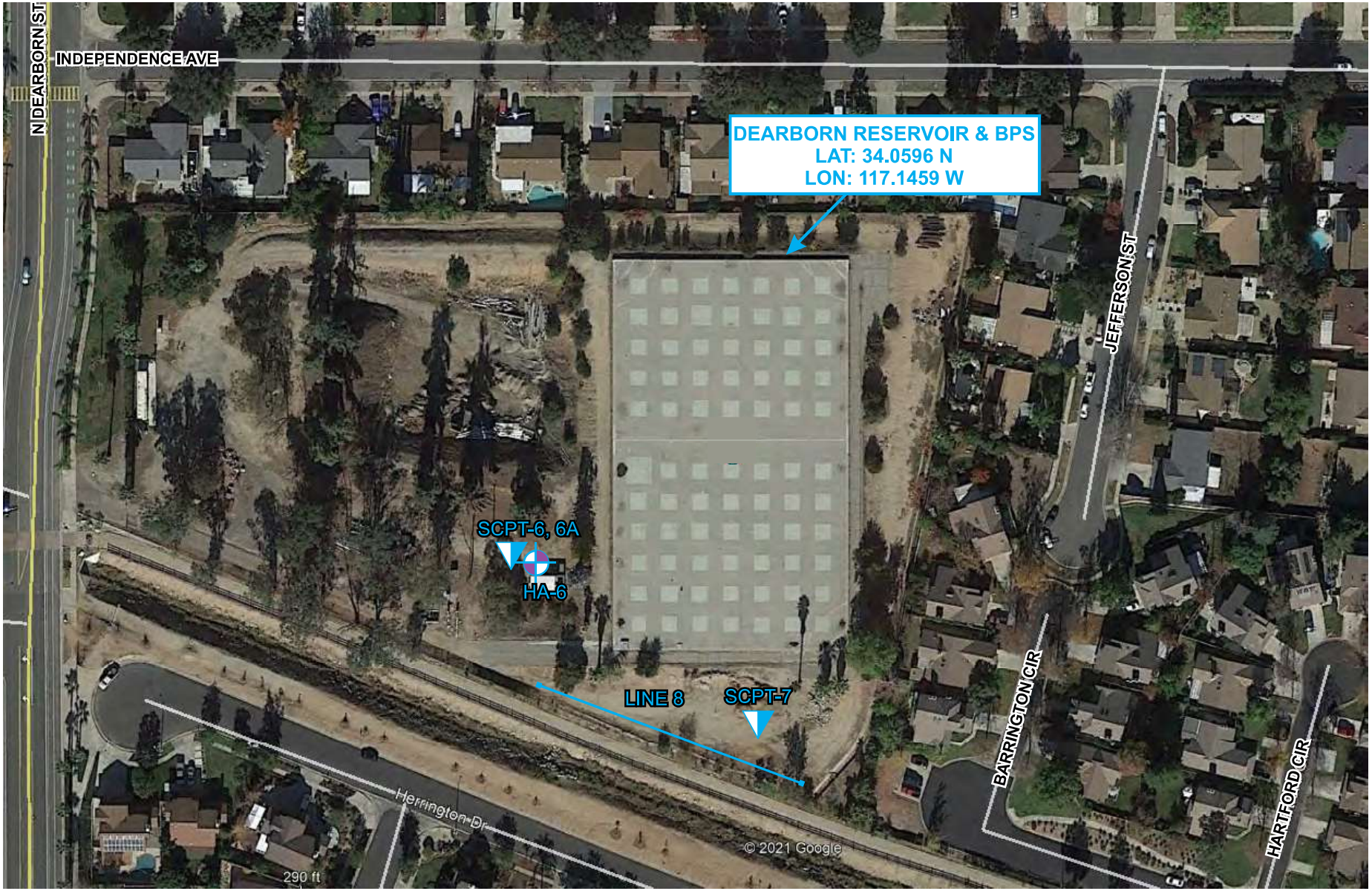

CPT Location

Hand Auger Location

Multichannel Analysis of Surface Waves (MASW) Test Location

N

No Scale

PROJECT NAME	FIGURE NAME	GROUP DELTA
CITY OF REDLANDS CONDITION, SEISMIC AND STRUCTURAL EVALUATION OF WATER FACILITIES	EXPLORATION LOCATION MAP DEARBORN RESERVOIR & BPS	PROJECT NUMBER: SD691 / FIGURE NUMBER: 2E

REFERENCE: Google Earth (2021).



CPT Location

Hand Auger Location

Multichannel Analysis of Surface Waves (MASW) Test Location

N

No Scale

PROJECT NAME	FIGURE NAME	GROUP DELTA	
CITY OF REDLANDS CONDITION, SEISMIC AND STRUCTURAL EVALUATION OF WATER FACILITIES	EXPLORATION LOCATION MAP FIFTH AVENUE RESERVOIR & BPS	PROJECT NUMBER SD691	FIGURE NUMBER 2F

REFERENCE: Google Earth (2021).



CPT Location

Hand Auger Location

Multichannel Analysis of Surface Waves (MASW) Test Location

N

No Scale

PROJECT NAME	FIGURE NAME	GROUP DELTA	
CITY OF REDLANDS CONDITION, SEISMIC AND STRUCTURAL EVALUATION OF WATER FACILITIES	EXPLORATION LOCATION MAP HIGHLAND AVENUE RESERVOIR & BPS	PROJECT NUMBER SD691	FIGURE NUMBER 2G

REFERENCE: Google Earth (2021).



CPT Location

Hand Auger Location

Multichannel Analysis of Surface Waves (MASW) Test Location

N

No Scale

PROJECT NAME	FIGURE NAME	GROUP DELTA	
CITY OF REDLANDS CONDITION, SEISMIC AND STRUCTURAL EVALUATION OF WATER FACILITIES	EXPLORATION LOCATION MAP MARGARITA RESERVOIR	PROJECT NUMBER	FIGURE NUMBER
		SD691	2H

REFERENCE: Google Earth (2021).



CPT Location

Hand Auger Location

Multichannel Analysis of Surface Waves (MASW) Test Location

N

No Scale

PROJECT NAME	FIGURE NAME	GROUP DELTA	
CITY OF REDLANDS CONDITION, SEISMIC AND STRUCTURAL EVALUATION OF WATER FACILITIES	EXPLORATION LOCATION MAP MILL CREEK 1&2 RESERVOIRS	PROJECT NUMBER SD691	FIGURE NUMBER 2I

REFERENCE: Google Earth (2021).



CPT Location

Hand Auger Location

Multichannel Analysis of Surface Waves (MASW) Test Location

N

No Scale

PROJECT NAME	FIGURE NAME	GROUP DELTA	
CITY OF REDLANDS CONDITION, SEISMIC AND STRUCTURAL EVALUATION OF WATER FACILITIES	EXPLORATION LOCATION MAP SAND CANYON RESERVOIR& BPS	PROJECT NUMBER	FIGURE NUMBER
		SD691	2J

REFERENCE: Google Earth (2021).



CPT Location

Hand Auger Location

Multichannel Analysis of Surface Waves (MASW) Test Location

N

No Scale

PROJECT NAME	FIGURE NAME	GROUP DELTA	
CITY OF REDLANDS CONDITION, SEISMIC AND STRUCTURAL EVALUATION OF WATER FACILITIES	EXPLORATION LOCATION MAP SMILEY RESERVOIR	PROJECT NUMBER	FIGURE NUMBER
		SD691	2K

REFERENCE: Google Earth (2021).



CPT Location

Hand Auger Location

Multichannel Analysis of Surface Waves (MASW) Test Location

N

No Scale

PROJECT NAME	FIGURE NAME	GROUP DELTA	
CITY OF REDLANDS CONDITION, SEISMIC AND STRUCTURAL EVALUATION OF WATER FACILITIES	EXPLORATION LOCATION MAP SOUTH RESERVOIR & BPS	PROJECT NUMBER	FIGURE NUMBER
		SD691	2L

REFERENCE: Google Earth (2021).



CPT Location

Hand Auger Location

Multichannel Analysis of Surface Waves (MASW) Test Location

N

No Scale

PROJECT NAME	FIGURE NAME	GROUP DELTA	
CITY OF REDLANDS CONDITION, SEISMIC AND STRUCTURAL EVALUATION OF WATER FACILITIES	EXPLORATION LOCATION MAP SUNSET RESERVOIR	PROJECT NUMBER	FIGURE NUMBER
		SD691	2M

REFERENCE: Google Earth (2021).



CPT Location

Hand Auger Location

Multichannel Analysis of Surface Waves (MASW) Test Location

N

No Scale

PROJECT NAME	FIGURE NAME	GROUP DELTA	
CITY OF REDLANDS CONDITION, SEISMIC AND STRUCTURAL EVALUATION OF WATER FACILITIES	EXPLORATION LOCATION MAP TEXAS GROVE RESERVOIR & BPS	PROJECT NUMBER SD691	FIGURE NUMBER 2N

REFERENCE: Google Earth (2021).

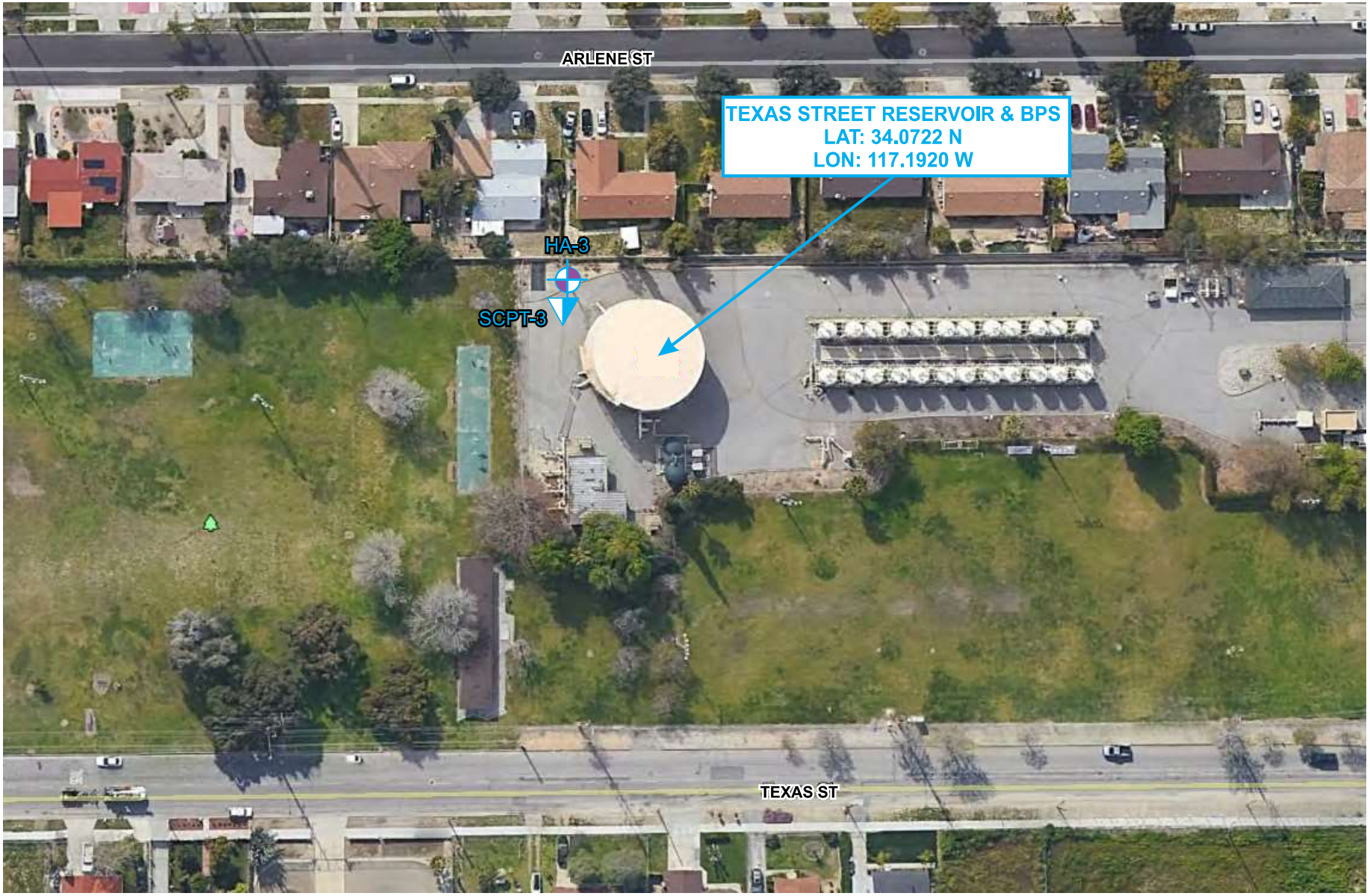

CPT Location

Hand Auger Location

Multichannel Analysis of Surface Waves (MASW) Test Location

N

No Scale

PROJECT NAME	FIGURE NAME	GROUP DELTA	
CITY OF REDLANDS CONDITION, SEISMIC AND STRUCTURAL EVALUATION OF WATER FACILITIES	EXPLORATION LOCATION MAP TEXAS STREET RESERVOIR & BPS	PROJECT NUMBER SD691	FIGURE NUMBER 2O

REFERENCE: Google Earth (2021).



CPT Location

Hand Auger Location

Multichannel Analysis of Surface Waves (MASW) Test Location

N

No Scale

PROJECT NAME	FIGURE NAME	GROUP DELTA	
CITY OF REDLANDS CONDITION, SEISMIC AND STRUCTURAL EVALUATION OF WATER FACILITIES	EXPLORATION LOCATION MAP WARD WAY RESERVOIR & BPS	PROJECT NUMBER: SD691	FIGURE NUMBER: 2P

REFERENCE: Google Earth (2021).

LEGEND

- **Qvyw -** Very young wash deposits, active (latest Holocene)
- **Qya_4 -** Young Axial Valley deposits, Unit 4 (late Holocene)
- **Qya_3 -** Young Axial Valley deposits, Unit 3 (late Holocene)
- **Qof_3 -** Old alluvial-fan deposits, Unit 3 (late to middle Pleistocene)
- **Qof_2 -** Old alluvial-fan deposits, Unit 2 (late to middle Pleistocene)
- **$Qvoa_3$ -** Very old axial-valley deposits, Unit 3 (middle to early Pleistocene)
- **$Qvoa_1$ -** Very old axial-valley deposits, Unit 1 (middle to early Pleistocene)
- **Qtstu -** San Timoteo Formation, upper member (Pleistocene and Pliocene)
- Mzmg - Mylonite and cataclasite granitoid rock (Mesozoic)
- Mzfg - Foliated granitoid rock (Mesozoic)
- **Fault -** solid where accurate, dashed where may not meet map-accuracy standard. Dotted where concealed by mapped covering unit; queried where existence uncertain.
- **Thrust Fault -** solid where accurate, dashed where may not meet map-accuracy standard. Dotted where concealed by mapped covering unit; queried where existence uncertain.

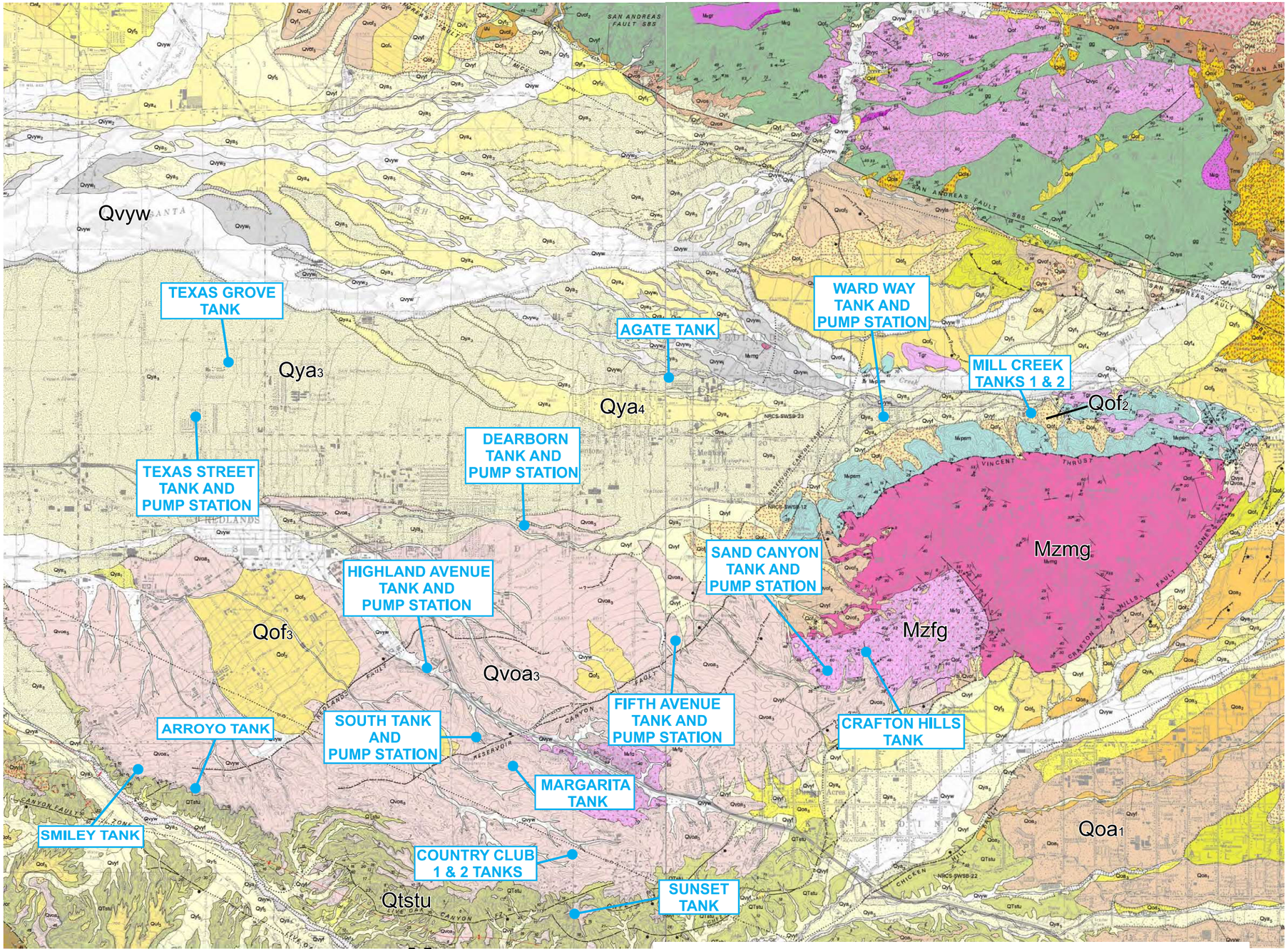

REFERENCES:

Matti, J.C., Morton, D.M., Cox, B.F. and Kendrick, K.J. (2003a). Geologic map and digital database of the Redlands 7.5" quadrangle, San Bernardino and Riverside counties, California, v. 1.0: U.S. Geological Survey Open-File Map OF 03-302, map scale 1:24,000.

Matti, J.C., Morton, D.M., Cox, B.F., Carson, S.E., and Yetter, T.J. (2003b). Geologic map and digital database of the Yucaipa 7.5" quadrangle, San Bernardino and Riverside counties, California, v.1.0: U.S. Geological Survey Open-File Map OF 03-301, map scale 1:24,000.

N

NO SCALE

PROJECT NAME	FIGURE NAME	GROUP DELTA
CITY OF REDLANDS CONDITION, SEISMIC AND STRUCTURAL EVALUATION OF WATER FACILITIES	REGIONAL GEOLOGIC MAP	PROJECT NUMBER: SD691 / FIGURE NUMBER: 3

LEGEND

- Historic (< 150 years), well constrained location
- Historic (< 150 years), moderately constrained location
- Historic (< 150 years), inferred location
- Latest Quaternary (
- Latest Quaternary (
- Latest Quaternary (
- Late Quaternary (< 130,000 years), well constrained location
- Late Quaternary (< 130,000 years), moderately contrained location
- Late Quaternary (< 130,000 years), inferred location
- Middle and late Quaternary (< 750,000 years), well constrained location
- Middle and late Quaternary (< 750,000 years), moderately constrained location
- Middle and late Quaternary (< 750,000 years), inferred location
- Undifferentiated Quaternary (< 1.6 million years), well constrained location
- Undifferentiated Quaternary (< 1.6 million years), moderately constrained location
- Undifferentiated Quaternary (< 1.6 million years), inferred location
- Unspecified age, well constrained location
- Unspecified age, moderately constrained location
- Unspecified age, inferred location
- Class B (various age), well constrained location
- Class B (various age), moderately constrained location
- Class B (various age), inferred location

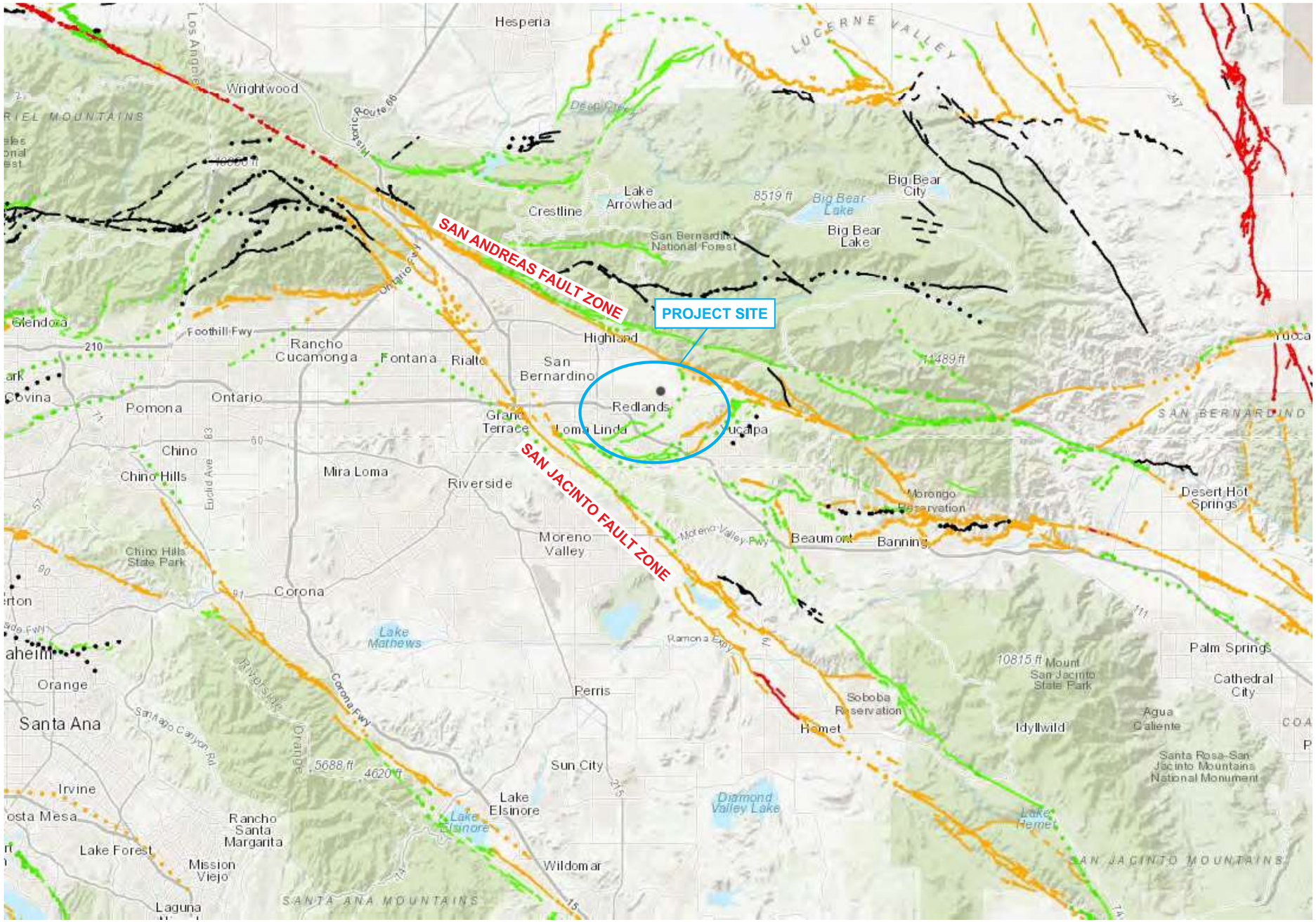

APPROXIMATE SCALE IN MILES

0 5 10

N

PROJECT NAME	FIGURE NAME	GROUP DELTA
CITY OF REDLANDS CONDITION, SEISMIC AND STRUCTURAL EVALUATION OF WATER FACILITIES	REGIONAL FAULT MAP	PROJECT NUMBER: SD691 / FIGURE NUMBER: 4

REFERENCE: USGS Quaternary Faults Database
https://usgs.maps.arcgis.com/apps/webappviewer/index.html



APPROXIMATE SCALE IN MILES

0 1 2

STRIKE SLIP FAULT

THRUST FALUT

N

PROJECT NAME	FIGURE NAME	GROUP DELTA
CITY OF REDLANDS CONDITION, SEISMIC AND STRUCTURAL EVALUATION OF WATER FACILITIES	2014 NATIONAL SEISMIC HAZARD MAP FAULT SOURCES	PROJECT NUMBER: SD691 / FIGURE NUMBER: 5A

REFERENCE: USGS Quaternary Faults Database, NSHM 2014 Fault Sources, https://usgs.maps.arcgis.com/apps/webappviewer/index.html



APPROXIMATE SCALE IN MILES

0 1 2

STRIKE SLIP FAULT

THRUST FALUT

NORMAL FALUT

N

PROJECT NAME	FIGURE NAME	GROUP DELTA	
CITY OF REDLANDS CONDITION, SEISMIC AND STRUCTURAL EVALUATION OF WATER FACILITIES	PROVISIONAL 2023 NATIONAL SEISMIC HAZARD MAP FAULT SOURCES	PROJECT NUMBER SD691	FIGURE NUMBER 5B

REFERENCE: USGS Quaternary Faults Database, Provisional NSHM 2023 Fault Sources, https://usgs.maps.arcgis.com/apps/webappviewer/index.html

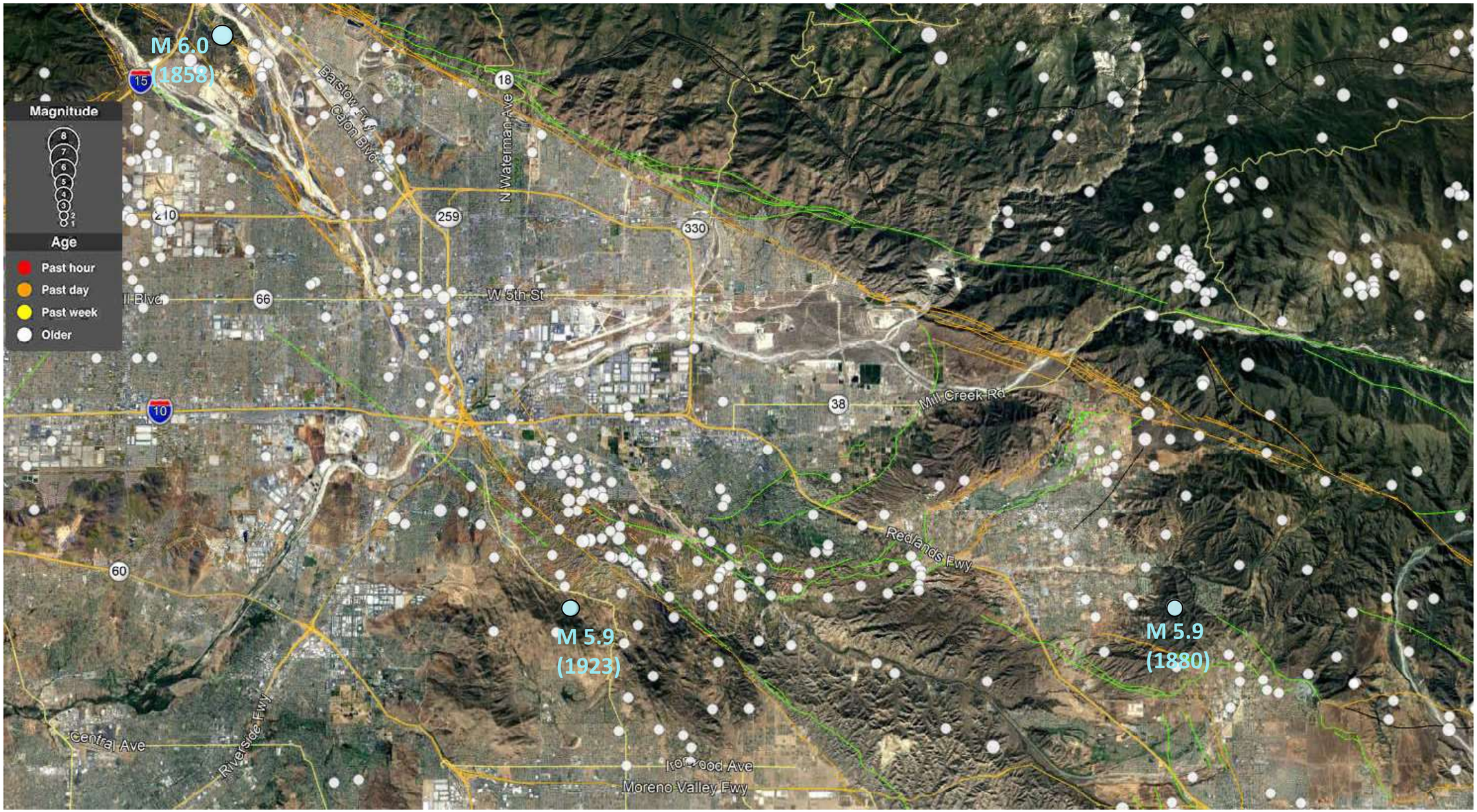

N

PROJECT NAME	FIGURE NAME	GROUP DELTA
CITY OF REDLANDS CONDITION, SEISMIC, AND STRUCTURAL EVALUATION OF WATER FACILITIES	HISTORIC SEISMICITY	PROJECT NUMBER: SD691 / FIGURE NUMBER: 6

REFERENCE: ANSS Comprehensive Earthquake Catalog (ComCat) (USGS, 2021)

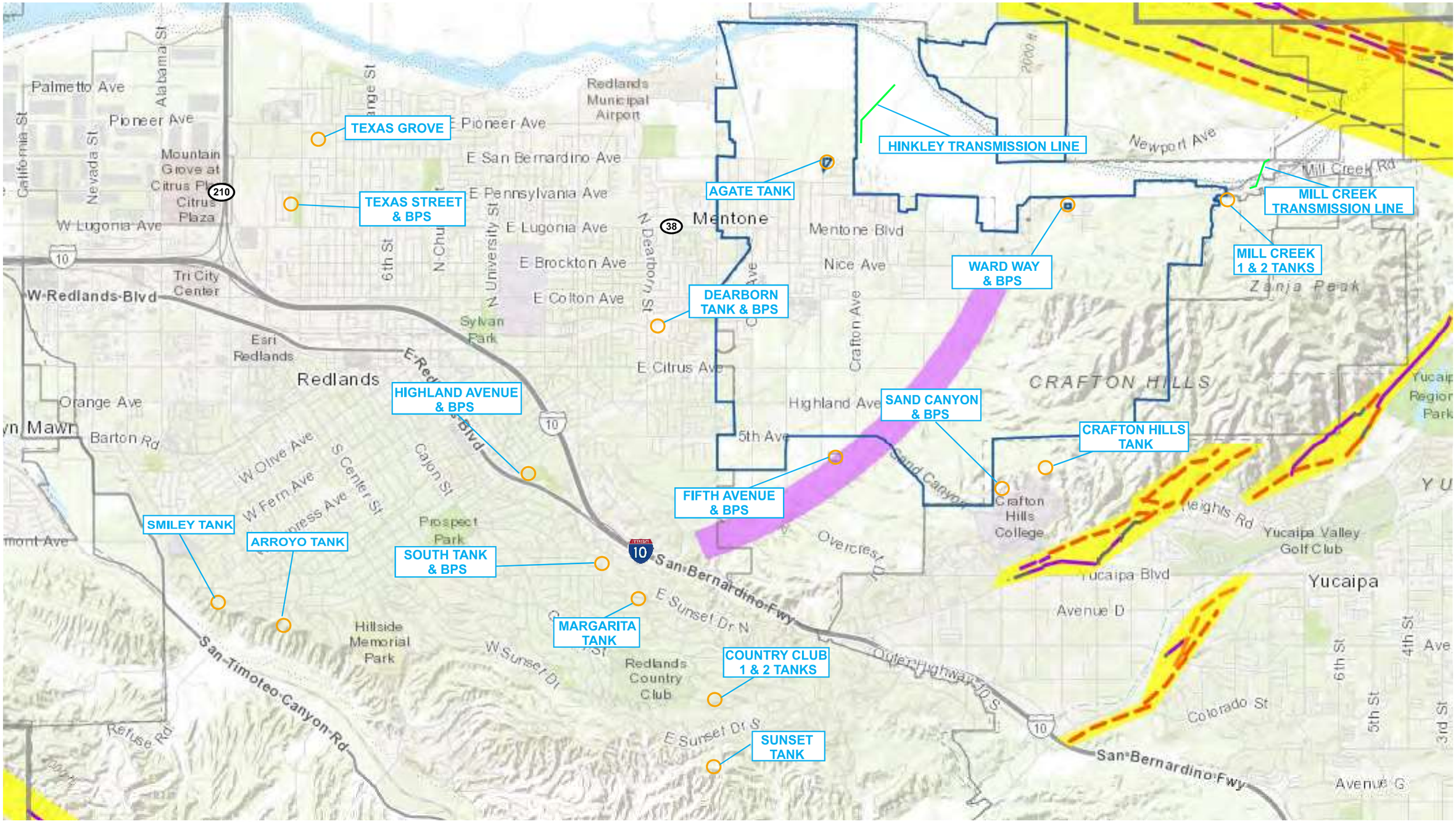

LEGEND: **Alquist-Priolo Fault Traces**

- Accurately Located
- Approximately Located
- Inferred
- Concealed
- Aerial Photo Lineament

APPROXIMATE SCALE IN MILES

0 1 2

Alquist-Priolo & County Fault Zones

- County Fault Hazard Zone
- Alquist-Priolo Fault Zone

N

PROJECT NAME	FIGURE NAME	GROUP DELTA
CITY OF REDLANDS CONDITION, SEISMIC AND STRUCTURAL EVALUATION OF WATER FACILITIES	SURFACE FAULT RUPTURE FAULT ZONES	PROJECT NUMBER: SD691 / FIGURE NUMBER: 7

REFERENCE: HZ-1 Earthquake Fault Zones on Countywide Plan Policy Map, as of October 2020: https://www.arcgis.com/apps/webappviewer/index.html?id=d88e2db7ee5649478d70e95c56b0d62d

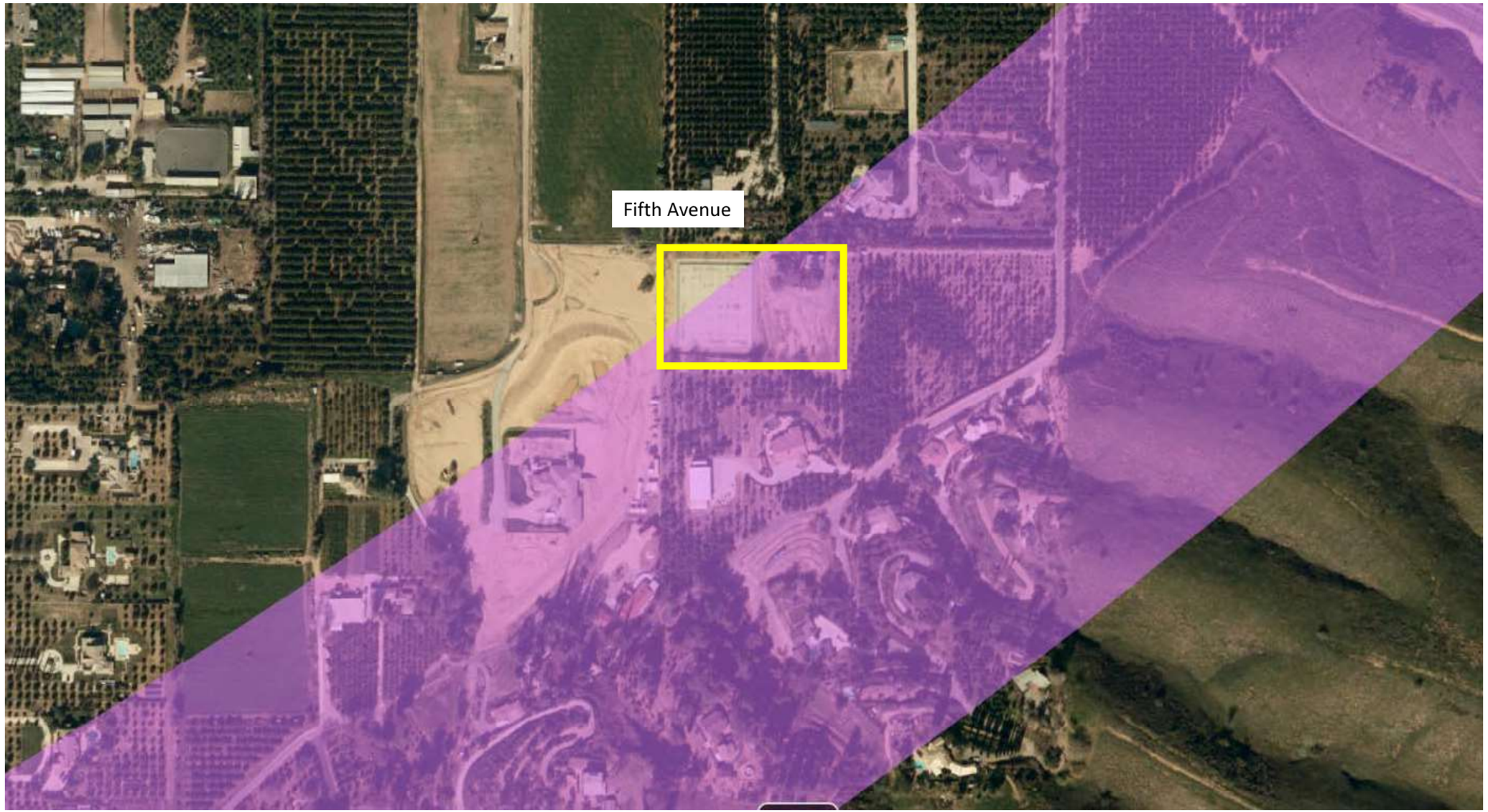

N

PROJECT NAME	FIGURE NAME	GROUP DELTA
CITY OF REDLANDS CONDITION, SEISMIC , AND STRUCTURAL ASSESSMENT OF WATER FACILITIES	**COUNTY FAULT ZONE FIFTH AVENUE RESERVOIR**	PROJECT NUMBER: **SD691** / FIGURE NUMBER: **8A**

REFERENCE: San Bernardino Countywide Plan Policy Map, HZ-1 Earthquake Fault Zones
https://www.arcgis.com/apps/webappviewer/index.html?id=d88e2db7ee5649478d70e95c56b0d62d



N

PROJECT NAME	FIGURE NAME	GROUP DELTA	
CITY OF REDLANDS CONDITION, SEISMIC, AND STRUCTURAL ASSESSMENT OF WATER FACILITIES	RESERVOIR CANYON FAULT FIFTH AVENUE RESERVOIR	PROJECT NUMBER SD691	FIGURE NUMBER 8B

REFERENCE: GOOGLE EARTH (2021)

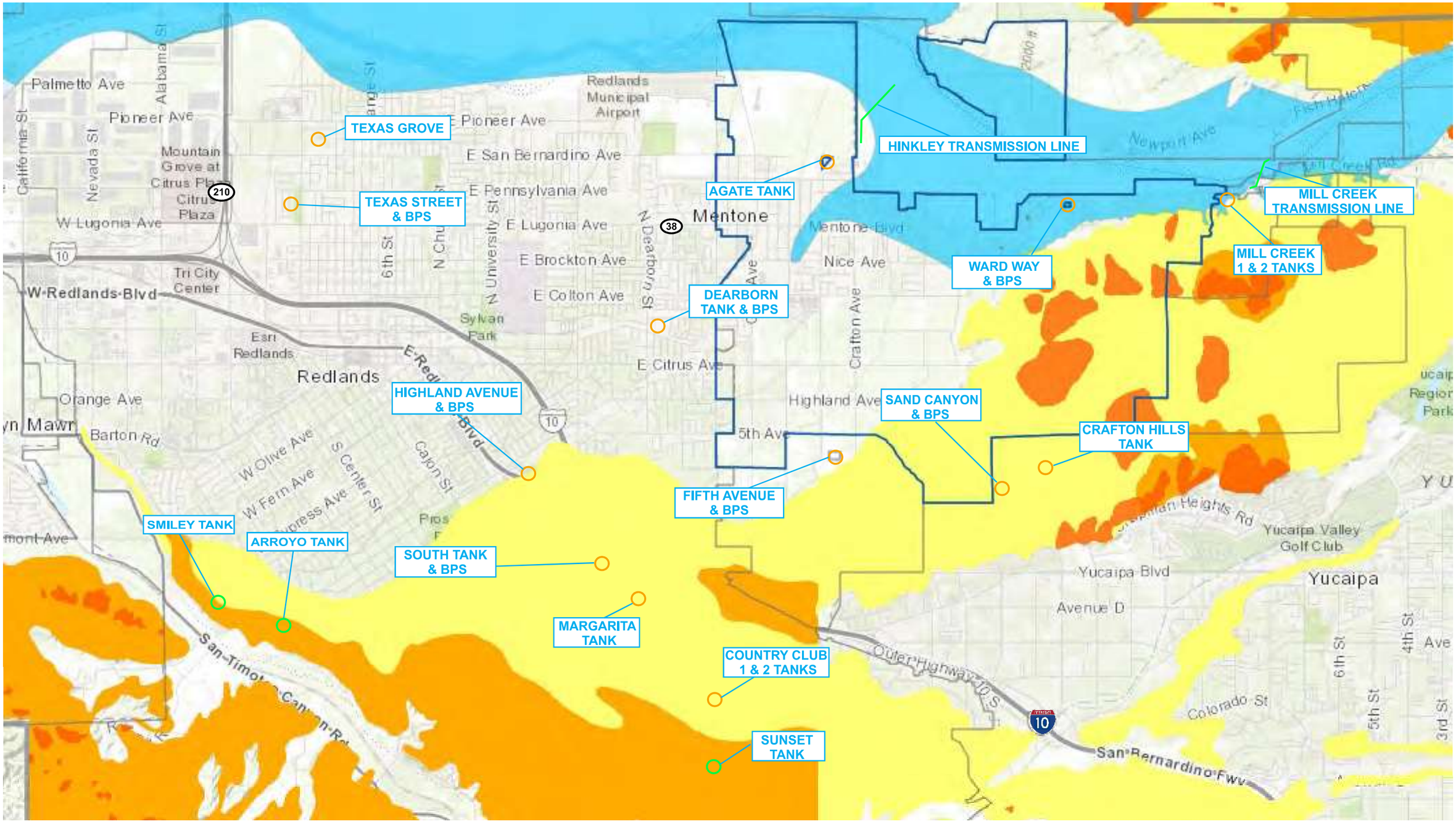

LEGEND:

Existing Landslides
- Mapped, Existing Landslide

Generalized Landslide Susceptibility
- Moderate to High
- Low to Moderate

Liquefaction
- High
- Medium
- Low

APPROXIMATE SCALE IN MILES

0 1 2

N

PROJECT NAME	FIGURE NAME	GROUP DELTA	
CITY OF REDLANDS CONDITION, SEISMIC AND STRUCTURAL EVALUATION OF WATER FACILITIES	LIQUEFACTION & LANDSLIDES ZONES	PROJECT NUMBER SD691	FIGURE NUMBER 9

REFERENCE: HZ-2 Liquefaction & Landslides Zones on Countywide Plan Policy Map, as of October 2020: https://www.arcgis.com/apps/webappviewer/index.html?id=5864a434814c4e53adc74101b34b1905



N

PROJECT NAME	FIGURE NAME	GROUP DELTA	
CITY OF REDLANDS CONDITION, SEISMIC, AND STRUCTURAL EVALUATION OF WATER FACILITIES	MARCH 2011 SATELLITE PHOTOGRAPH SUNSET RESERVOIR	PROJECT NUMBER SD 691	FIGURE NUMBER 10

REFERENCE: Google Earth (2011)

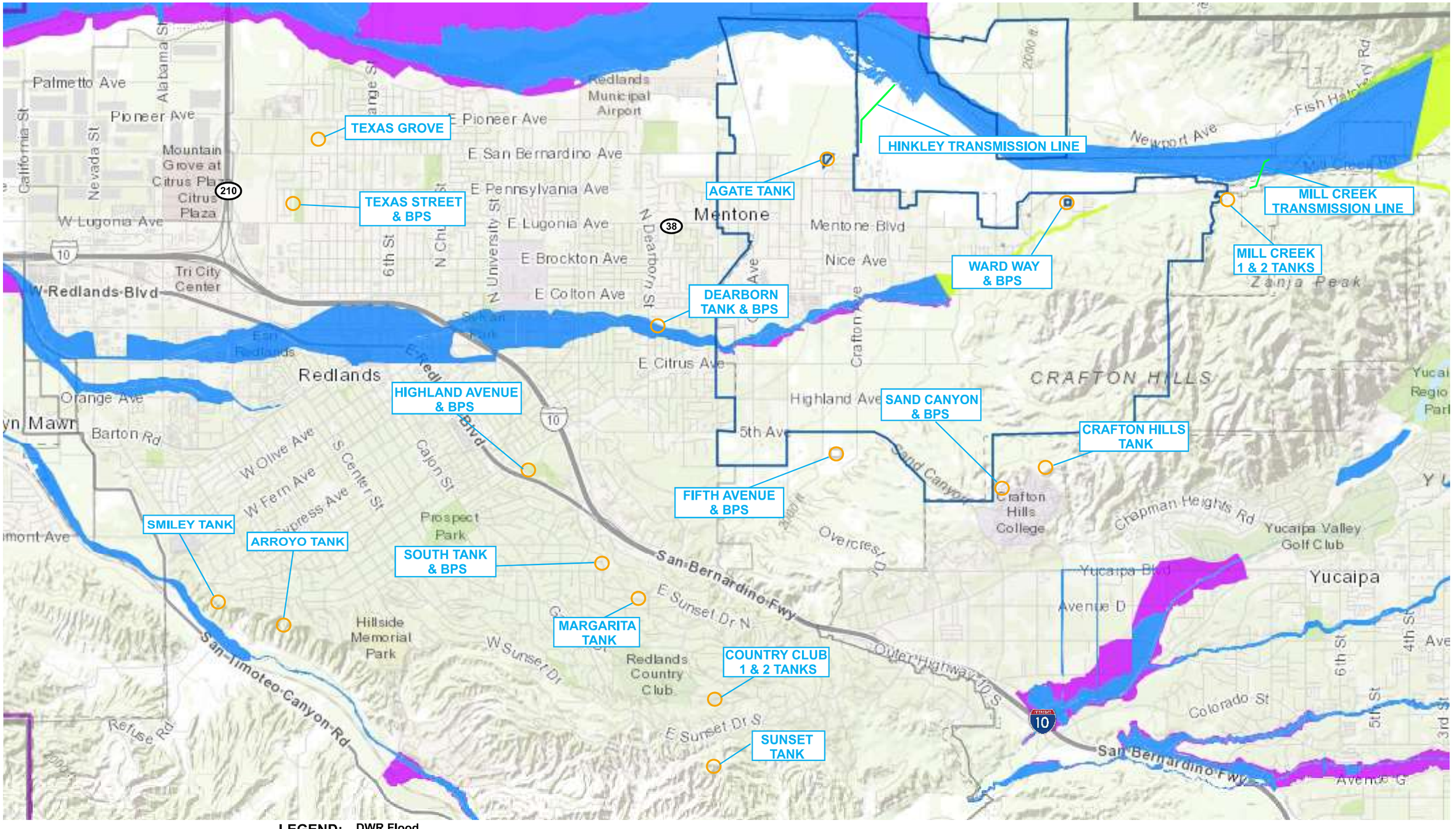

LEGEND:

DWR Flood

DWR Flood 100-Year Flood Awareness

FEMA Flood

100-Year Flood (1% Annual Chance Flood Hazard)

500-Year Flood (0.2% Annual Chance Flood Hazard)

APPROXIMATE SCALE IN MILES

0 1 2

N

PROJECT NAME	FIGURE NAME	GROUP DELTA
CITY OF REDLANDS CONDITION, SEISMIC AND STRUCTURAL EVALUATION OF WATER FACILITIES	FLOOD HAZARDS	PROJECT NUMBER: SD691 / FIGURE NUMBER: 11

REFERENCE: HZ-4 Flood Hazards Zones on Countywide Plan Policy Map, as of October 2020: https://www.arcgis.com/apps/webappviewer/index.html?id=d276e645a4ae4e2bb95694ff06b4f0be

APPENDIX A
Field Exploration

APPENDIX A
Field Exploration

A.1 Introduction

The subsurface conditions in the City of Redlands water reservoir and pump station evaluation project sites were investigated by performing a total of 6 cone penetration test (CPT) soundings, seven seismic cone penetration test (SCPT) soundings, and fifteen hand auger borings at the various sites. The CPT and SCPTs were performed on April 27 and 28, 2021. Hand auger borings were performed at the sites between April 27, 2021 and May 7, 2021. The locations of the explorations are presented in Figures 2A through 2O of the main report. A summary of field explorations is presented in Table A-1 below.

The exploration locations were determined by visually estimating, pacing and taping distances from landmarks shown in the Figures 2A through 2O. The locations shown should not be considered more accurate than is implied by the method of measurement used and the scale of the map. Note that soil conditions at locations away from the exploration locations may be substantially different from those at the specific locations we explored.

Prior to beginning the exploration program, subsurface utility maps were reviewed. Underground Service Alert (USA) was notified and each CPT/SPT exploration location was cleared for underground utilities by a private utility locator, Subsurface Surveys. The exploration methods are described in the following section.

A.2 Soil Exploration and Sampling

Hand augering was performed by a Group Delta field geologist until refusal was encountered, or a maximum depth of 10 feet, whichever came first. Logs of the borings are shown in Figures A-1 to A-15.

Bulk soil samples excavated from the hand auger borings were visually classified in accordance with ASTM D 2488 and the Unified Soil Classification System (USCS) and logged. Bulk samples of the soil cuttings were collected and returned to the laboratory for testing. Each hand auger boring was backfilled with the cuttings.

The SCPT soundings were advanced by Kehoe Testing & Engineering in general accordance with ASTM D5778. Integrated electronic circuitry was used to measure tip resistance (Q_c) and skin friction (F_s) while the CPT was advanced using hydraulic down pressure. A piezometer behind the cone tip also measured transient pore pressure (u). The CPT soil interpretations are a function of normalized tip resistance and friction ratio (Robertson, 2010). Seismic CPT was conducted at the locations listed in Table A-1 below. Shear wave velocity was measured through the soil material with 5 ft intervals, using a triaxial geophone located in the cone tip, down to the final depth of these CPT holes. CPTs and SCPTs were performed until 100 feet or refusal, whichever came first. The CPT data are enclosed in this appendix.

Table A-1
Summary of Subsurface Explorations

Exploration No.	Date Performed	Total Depth (ft)	Site Location	Exploration Type
HA-1	4/27/2021	1	Ward Way	Hand Auger
HA-2	4/27/2021	1	Agate	Hand Auger
HA-3	4/27/2021	4	Texas Street	Hand Auger
HA-4	4/27/2021	3	South	Hand Auger
HA-5	4/28/2021	4	Texas Grove	Hand Auger
HA-6	4/28/2021	3	Dearborn	Hand Auger
HA-7	4/28/2021	5	Highland	Hand Auger
HA-8	5/4/2021	1	Sand Canyon	Hand Auger
HA-9	5/4/2021	1	Crafton Hills	Hand Auger
HA-10	5/4/2021	3	Fifth Avenue	Hand Auger
HA-11	5/5/2021	3	Sunset	Hand Auger
HA-12	5/5/2021	3	Country Club	Hand Auger
HA-13	5/5/2021	3	Smiley	Hand Auger
HA-14	5/6/2021	3	Arroyo	Hand Auger
HA-15	5/6/2021	1	Mill Creek	Hand Auger
CPT-1	4/27/2021	1.58	Ward Way	Cone Penetration Test
CPT-1A	4/27/2021	0.53	Ward Way	Cone Penetration Test
CPT-1B	4/27/2021	2.43	Ward Way	Cone Penetration Test
CPT-2	4/27/2021	2.76	Agate	Cone Penetration Test
CPT-2A	4/27/2021	2.43	Agate	Cone Penetration Test
SCPT-3	4/27/2021	83.67	Texas Street	Seismic Cone Penetration Test
SCPT-4	4/27/2021	61.16	South	Seismic Cone Penetration Test
SCPT-5	4/28/2021	100.53	Texas Grove	Seismic Cone Penetration Test
SCPT-6	4/28/2021	11.03	Dearborn	Seismic Cone Penetration Test
CPT-6A	4/28/2021	8.47	Dearborn	Cone Penetration Test
SCPT-7	4/28/2021	6.44	Dearborn	Seismic Cone Penetration Test
SCPT-8	4/28/2021	65.04	Highland	Seismic Cone Penetration Test
SCPT-9	4/28/2021	20.34	Highland	Seismic Cone Penetration Test

BORING RECORD

PROJECT NAME	PROJECT NUMBER	BORING
City of Redlands Potable Water Facilities	SD691	**HA-1**

SITE LOCATION	START	FINISH	SHEET NO.
Ward Way	4/27/2021	4/27/2021	1 of 1

DRILLING COMPANY	DRILLING METHOD	LOGGED BY	CHECKED BY
Group Delta Consultants	Hand Auger	SN	KC

DRILLING EQUIPMENT	BORING DIA. (in)	TOTAL DEPTH (ft)	GROUND ELEV (ft)	DEPTH/*ELEV.* GROUNDWATER (ft)
Hand Auger and Shovel	3	1		▼ / *na*

SAMPLING METHOD
Auger and Shovel

NOTES

DEPTH (feet)	ELEVATION (feet)	SAMPLE TYPE	SAMPLE NO.	PENETRATION RESISTANCE (BLOWS / 6 IN)	BLOW/FT "N"	N_{60}	MOISTURE (%)	DRY DENSITY (pcf)	OTHER TESTS	DEPTH (feet)	GRAPHIC LOG	DESCRIPTION AND CLASSIFICATION
			B-1				4		%200			SILTY SAND (SM); moist; dark brown; mostly fine to medium SAND; little fines; few GRAVEL; non-plastic. Hand auger refusal at 1' on cobbles and boulders, boulders seen nearby at ground surface. (16% Fines)
												Total Depth: 1 feet Refusal on Cobbles and Boulders No Groundwater Observed
5										5		

GDC_LOG_BORING_MMX_SOIL_SD SD691 LOGS.GPJ GDCLOG.GDT 7/28/21

GROUP DELTA CONSULTANTS, INC.
9245 Activity Road, Suite 103
San Diego, California 92126

THIS SUMMARY APPLIES ONLY AT THE LOCATION OF THIS BORING AND AT THE TIME OF DRILLING. SUBSURFACE CONDITIONS MAY DIFFER AT OTHER LOCATIONS AND MAY CHANGE AT THIS LOCATION WITH THE PASSAGE OF TIME. THE DATA PRESENTED IS A SIMPLIFICATION OF THE ACTUAL CONDITIONS ENCOUNTERED.

FIGURE
A-1

BORING RECORD

PROJECT NAME	PROJECT NUMBER	BORING
City of Redlands Potable Water Facilities	SD691	**HA-2**

SITE LOCATION	START	FINISH	SHEET NO.
Agate	4/27/2021	4/27/2021	1 of 1

DRILLING COMPANY	DRILLING METHOD	LOGGED BY	CHECKED BY
Group Delta Consultants	Hand Auger	SN	KC

DRILLING EQUIPMENT	BORING DIA. (in)	TOTAL DEPTH (ft)	GROUND ELEV (ft)	DEPTH/*ELEV.* GROUNDWATER (ft)
Hand Auger and Shovel	3	1		▼ / *na*

SAMPLING METHOD
Auger and Shovel

NOTES

DEPTH (feet)	ELEVATION (feet)	SAMPLE TYPE	SAMPLE NO.	PENETRATION RESISTANCE (BLOWS / 6 IN)	BLOW/FT "N"	N_{60}	MOISTURE (%)	DRY DENSITY (pcf)	OTHER TESTS	DEPTH (feet)	GRAPHIC LOG	DESCRIPTION AND CLASSIFICATION
			B-1				2		%200			SILTY SAND (SM); dark grayish brown; moist; mostly fine to medium SAND; little GRAVEL; little fines; non-plastic. Hand auger refusal at 1' on cobbles and boulders; boulders up to 24" in diameter seen on surface and in nearby stockpiles. (17% Fines)
												Total Depth: 1 feet Refusal on Cobbles and Boulders No Groundwater Observed
5										5		

GDC_LOG_BORING_MMX_SOIL_SD SD691 LOGS.GPJ GDCLOG.GDT 7/28/21

GROUP DELTA CONSULTANTS, INC.
9245 Activity Road, Suite 103
San Diego, California 92126

THIS SUMMARY APPLIES ONLY AT THE LOCATION OF THIS BORING AND AT THE TIME OF DRILLING. SUBSURFACE CONDITIONS MAY DIFFER AT OTHER LOCATIONS AND MAY CHANGE AT THIS LOCATION WITH THE PASSAGE OF TIME. THE DATA PRESENTED IS A SIMPLIFICATION OF THE ACTUAL CONDITIONS ENCOUNTERED.

FIGURE
A-2

BORING RECORD

PROJECT NAME	PROJECT NUMBER	BORING
City of Redlands Potable Water Facilities	SD691	**HA-3**

SITE LOCATION	START	FINISH	SHEET NO.
Texas Street	4/27/2021	4/27/2021	1 of 1

DRILLING COMPANY	DRILLING METHOD	LOGGED BY	CHECKED BY
Group Delta Consultants	Hand Auger	SN	KC

DRILLING EQUIPMENT	BORING DIA. (in)	TOTAL DEPTH (ft)	GROUND ELEV (ft)	DEPTH/*ELEV.* GROUNDWATER (ft)
Hand Auger and Shovel	3	4		▼ / *na*

SAMPLING METHOD
Auger and Shovel

NOTES

DEPTH (feet)	ELEVATION (feet)	SAMPLE TYPE	SAMPLE NO.	PENETRATION RESISTANCE (BLOWS / 6 IN)	BLOW/FT "N"	N_{60}	MOISTURE (%)	DRY DENSITY (pcf)	OTHER TESTS	DEPTH (feet)	GRAPHIC LOG	DESCRIPTION AND CLASSIFICATION
			B-1				3		PA PI COR			Poorly-graded SAND with SILT (SP-SM); dark grayish brown; moist; mostly SAND; little fines; few to little fine GRAVEL; non-plastic. (11% Gravel, 75% Sand, 14% Fines)
												Total Depth: 4 feet No Groundwater Observed
5										5		

GROUP DELTA CONSULTANTS, INC.
9245 Activity Road, Suite 103
San Diego, California 92126

THIS SUMMARY APPLIES ONLY AT THE LOCATION OF THIS BORING AND AT THE TIME OF DRILLING. SUBSURFACE CONDITIONS MAY DIFFER AT OTHER LOCATIONS AND MAY CHANGE AT THIS LOCATION WITH THE PASSAGE OF TIME. THE DATA PRESENTED IS A SIMPLIFICATION OF THE ACTUAL CONDITIONS ENCOUNTERED.

FIGURE
A-3

BORING RECORD

PROJECT NAME	PROJECT NUMBER	BORING
City of Redlands Potable Water Facilities	SD691	**HA-4**

SITE LOCATION	START	FINISH	SHEET NO.
South	4/27/2021	4/27/2021	1 of 1

DRILLING COMPANY	DRILLING METHOD	LOGGED BY	CHECKED BY
Group Delta Consultants	Hand Auger	SN	KC

DRILLING EQUIPMENT	BORING DIA. (in)	TOTAL DEPTH (ft)	GROUND ELEV (ft)	DEPTH/*ELEV.* GROUNDWATER (ft)
Hand Auger and Shovel	3	3		▼ / *na*

SAMPLING METHOD
Auger and Shovel

NOTES

DEPTH (feet)	ELEVATION (feet)	SAMPLE TYPE	SAMPLE NO.	PENETRATION RESISTANCE (BLOWS / 6 IN)	BLOW/FT "N"	N_{60}	MOISTURE (%)	DRY DENSITY (pcf)	OTHER TESTS	DEPTH (feet)	GRAPHIC LOG	DESCRIPTION AND CLASSIFICATION
			B-1				4		PA PI COR			SILTY SAND (SM); reddish brown; moist; mostly fine to medium SAND; little fines; few GRAVEL; organics present in upper 1 foot. (11% Gravel, 72% Sand, 17% Fines)
												Total Depth: 3 feet No Groundwater Observed
5										5		

BORING RECORD

PROJECT NAME	PROJECT NUMBER	BORING
City of Redlands Potable Water Facilities	SD691	**HA-5**

SITE LOCATION	START	FINISH	SHEET NO.
Texas Grove	4/28/2021	4/28/2021	1 of 1

DRILLING COMPANY	DRILLING METHOD	LOGGED BY	CHECKED BY
Group Delta Consultants	Hand Auger	SN	KC

DRILLING EQUIPMENT	BORING DIA. (in)	TOTAL DEPTH (ft)	GROUND ELEV (ft)	DEPTH/*ELEV.* GROUNDWATER (ft)
Hand Auger and Shovel	3	4		▼ / *na*

SAMPLING METHOD	NOTES
Auger and Shovel	

DEPTH (feet)	ELEVATION (feet)	SAMPLE TYPE	SAMPLE NO.	PENETRATION RESISTANCE (BLOWS / 6 IN)	BLOW/FT "N"	N_{60}	MOISTURE (%)	DRY DENSITY (pcf)	OTHER TESTS	DEPTH (feet)	GRAPHIC LOG	DESCRIPTION AND CLASSIFICATION
			B-1				3		%200			SILTY SAND (SM); grayish brown; moist; mostly fine SAND; little fines; trace GRAVEL; non-plastic. (15% Fines)
5										5		Total Depth: 4 feet No Groundwater Observed

GDC_LOG_BORING_MMX_SOIL_SD SD691 LOGS.GPJ GDCLOG.GDT 7/28/21

GROUP DELTA CONSULTANTS, INC.
9245 Activity Road, Suite 103
San Diego, California 92126

THIS SUMMARY APPLIES ONLY AT THE LOCATION OF THIS BORING AND AT THE TIME OF DRILLING. SUBSURFACE CONDITIONS MAY DIFFER AT OTHER LOCATIONS AND MAY CHANGE AT THIS LOCATION WITH THE PASSAGE OF TIME. THE DATA PRESENTED IS A SIMPLIFICATION OF THE ACTUAL CONDITIONS ENCOUNTERED.

FIGURE
A-5

BORING RECORD

PROJECT NAME	PROJECT NUMBER	BORING
City of Redlands Potable Water Facilities	SD691	**HA-6**

SITE LOCATION	START	FINISH	SHEET NO.
Dearborn	4/27/2021	4/27/2021	1 of 1

DRILLING COMPANY	DRILLING METHOD	LOGGED BY	CHECKED BY
Group Delta Consultants	Hand Auger	SN	KC

DRILLING EQUIPMENT	BORING DIA. (in)	TOTAL DEPTH (ft)	GROUND ELEV (ft)	DEPTH/*ELEV.* GROUNDWATER (ft)
Hand Auger and Shovel	3	3		▼ / *na*

SAMPLING METHOD
Auger and Shovel

NOTES

DEPTH (feet)	ELEVATION (feet)	SAMPLE TYPE	SAMPLE NO.	PENETRATION RESISTANCE (BLOWS / 6 IN)	BLOW/FT "N"	N_{60}	MOISTURE (%)	DRY DENSITY (pcf)	OTHER TESTS	DEPTH (feet)	GRAPHIC LOG	DESCRIPTION AND CLASSIFICATION
			B-1				2		%200			SILTY SAND (SM); dark grayish brown; moist; mostly fine SAND; little to some fines; trace GRAVEL; non-plastic. (27% Fines)
												Total Depth: 3 feet No Groundwater Observed
5										5		

GDC_LOG_BORING_MMX_SOIL_SD SD691 LOGS.GPJ GDCLOG.GDT 7/28/21

GROUP DELTA CONSULTANTS, INC.
9245 Activity Road, Suite 103
San Diego, California 92126

THIS SUMMARY APPLIES ONLY AT THE LOCATION OF THIS BORING AND AT THE TIME OF DRILLING. SUBSURFACE CONDITIONS MAY DIFFER AT OTHER LOCATIONS AND MAY CHANGE AT THIS LOCATION WITH THE PASSAGE OF TIME. THE DATA PRESENTED IS A SIMPLIFICATION OF THE ACTUAL CONDITIONS ENCOUNTERED.

FIGURE
A-6

BORING RECORD

PROJECT NAME	PROJECT NUMBER	BORING
City of Redlands Potable Water Facilities	SD691	**HA-7**

SITE LOCATION	START	FINISH	SHEET NO.
Highland	4/28/2021	4/28/2021	1 of 1

DRILLING COMPANY	DRILLING METHOD	LOGGED BY	CHECKED BY
Group Delta Consultants	Hand Auger	SN	KC

DRILLING EQUIPMENT	BORING DIA. (in)	TOTAL DEPTH (ft)	GROUND ELEV (ft)	DEPTH/*ELEV.* GROUNDWATER (ft)
Hand Auger and Shovel	3	5		▼ / *na*

SAMPLING METHOD
Auger and Shovel

NOTES

DEPTH (feet)	ELEVATION (feet)	SAMPLE TYPE	SAMPLE NO.	PENETRATION RESISTANCE (BLOWS / 6 IN)	BLOW/FT "N"	N_{60}	MOISTURE (%)	DRY DENSITY (pcf)	OTHER TESTS	DEPTH (feet)	GRAPHIC LOG	DESCRIPTION AND CLASSIFICATION
			B-1				6		PA			SILTY SAND (SM); brown; moist; mostly fine to coarse SAND; some fines; trace GRAVEL; non-plastic. (5% Gravel, 66% Sand, 29% Fines)
5										5		Total Depth: 5 feet No Groundwater Observed

GROUP DELTA CONSULTANTS, INC.
9245 Activity Road, Suite 103
San Diego, California 92126

THIS SUMMARY APPLIES ONLY AT THE LOCATION OF THIS BORING AND AT THE TIME OF DRILLING. SUBSURFACE CONDITIONS MAY DIFFER AT OTHER LOCATIONS AND MAY CHANGE AT THIS LOCATION WITH THE PASSAGE OF TIME. THE DATA PRESENTED IS A SIMPLIFICATION OF THE ACTUAL CONDITIONS ENCOUNTERED.

FIGURE
A-7

GDC_LOG_BORING_MMX_SOIL_SD SD691 LOGS.GPJ GDCLOG.GDT 7/28/21

BORING RECORD

PROJECT NAME	PROJECT NUMBER	BORING
City of Redlands Potable Water Facilities	SD691	**HA-8**

SITE LOCATION	START	FINISH	SHEET NO.
Sand Canyon	5/4/2021	5/4/2021	1 of 1

DRILLING COMPANY	DRILLING METHOD	LOGGED BY	CHECKED BY
Group Delta Consultants	Hand Auger	SN	KC

DRILLING EQUIPMENT	BORING DIA. (in)	TOTAL DEPTH (ft)	GROUND ELEV (ft)	DEPTH/*ELEV.* GROUNDWATER (ft)
Hand Auger and Shovel	3	1		▼ / *na*

SAMPLING METHOD: Auger and Shovel

NOTES:

DEPTH (feet)	ELEVATION (feet)	SAMPLE TYPE	SAMPLE NO.	PENETRATION RESISTANCE (BLOWS / 6 IN)	BLOW/FT "N"	N_{60}	MOISTURE (%)	DRY DENSITY (pcf)	OTHER TESTS	DEPTH (feet)	GRAPHIC LOG	DESCRIPTION AND CLASSIFICATION
			B-1				2		PA COR			SILTY SAND with GRAVEL (SM); yellowish brown; moist; mostly fine SAND; little fines; little GRAVEL; non-plastic. (23% Gravel, 59% Sand, 18% Fines)
												Total Depth: 1 feet Refusal on Crystalline Rock No Groundwater Observed
5										5		

GDC_LOG_BORING_MMX_SOIL_SD SD691 LOGS.GPJ GDCLOG.GDT 7/28/21

GROUP DELTA CONSULTANTS, INC.
9245 Activity Road, Suite 103
San Diego, California 92126

THIS SUMMARY APPLIES ONLY AT THE LOCATION OF THIS BORING AND AT THE TIME OF DRILLING. SUBSURFACE CONDITIONS MAY DIFFER AT OTHER LOCATIONS AND MAY CHANGE AT THIS LOCATION WITH THE PASSAGE OF TIME. THE DATA PRESENTED IS A SIMPLIFICATION OF THE ACTUAL CONDITIONS ENCOUNTERED.

FIGURE
A-8

BORING RECORD

PROJECT NAME	PROJECT NUMBER	BORING
City of Redlands Potable Water Facilities	SD691	**HA-9**

SITE LOCATION	START	FINISH	SHEET NO.
Crafton Hills	5/4/2021	5/4/2021	1 of 1

DRILLING COMPANY	DRILLING METHOD	LOGGED BY	CHECKED BY
Group Delta Consultants	Hand Auger	SN	KC

DRILLING EQUIPMENT	BORING DIA. (in)	TOTAL DEPTH (ft)	GROUND ELEV (ft)	DEPTH/*ELEV.* GROUNDWATER (ft)
Hand Auger and Shovel	3	1		▼ / *na*

SAMPLING METHOD	NOTES
Auger and Shovel	

DEPTH (feet)	ELEVATION (feet)	SAMPLE TYPE	SAMPLE NO.	PENETRATION RESISTANCE (BLOWS / 6 IN)	BLOW/FT "N"	N_{60}	MOISTURE (%)	DRY DENSITY (pcf)	OTHER TESTS	DEPTH (feet)	GRAPHIC LOG	DESCRIPTION AND CLASSIFICATION
			B-1				1		%200 COR			Poorly-graded SAND with SILT and GRAVEL (SP-SM); brown; dry; mostly fine to medium SAND; little GRAVEL; few fines; non-plastic. (9% Fines)
												Total Depth: 1 feet Refusal on Crystalline Rock No Groundwater Observed
5										5		

GDC_LOG_BORING_MMX_SOIL_SD SD691 LOGS.GPJ GDCLOG.GDT 7/28/21

GROUP DELTA CONSULTANTS, INC.
9245 Activity Road, Suite 103
San Diego, California 92126

THIS SUMMARY APPLIES ONLY AT THE LOCATION OF THIS BORING AND AT THE TIME OF DRILLING. SUBSURFACE CONDITIONS MAY DIFFER AT OTHER LOCATIONS AND MAY CHANGE AT THIS LOCATION WITH THE PASSAGE OF TIME. THE DATA PRESENTED IS A SIMPLIFICATION OF THE ACTUAL CONDITIONS ENCOUNTERED.

FIGURE
A-9

BORING RECORD

PROJECT NAME	PROJECT NUMBER	BORING
City of Redlands Potable Water Facilities	SD691	**HA-10**

SITE LOCATION	START	FINISH	SHEET NO.
Fifth Avenue	5/4/2021	5/4/2021	1 of 1

DRILLING COMPANY	DRILLING METHOD	LOGGED BY	CHECKED BY
Group Delta Consultants	Hand Auger	SN	KC

DRILLING EQUIPMENT	BORING DIA. (in)	TOTAL DEPTH (ft)	GROUND ELEV (ft)	DEPTH/*ELEV.* GROUNDWATER (ft)
Hand Auger and Shovel	3	3		▼ / *na*

SAMPLING METHOD
Auger and Shovel

NOTES

DEPTH (feet)	ELEVATION (feet)	SAMPLE TYPE	SAMPLE NO.	PENETRATION RESISTANCE (BLOWS / 6 IN)	BLOW/FT "N"	N_{60}	MOISTURE (%)	DRY DENSITY (pcf)	OTHER TESTS	DEPTH (feet)	GRAPHIC LOG	DESCRIPTION AND CLASSIFICATION
			B-1				1		PA COR			SILTY SAND (SM); yellowish brown; dry; mostly fine to coarse SAND; some fines; trace GRAVEL; non-plastic. (5% Gravel, 63% Sand, 32% Fines)
5										5		Total Depth: 3 feet No Groundwater Observed

GDC_LOG_BORING_MMX_SOIL_SD SD691 LOGS.GPJ GDCLOG.GDT 7/28/21

GROUP DELTA CONSULTANTS, INC.
9245 Activity Road, Suite 103
San Diego, California 92126

THIS SUMMARY APPLIES ONLY AT THE LOCATION OF THIS BORING AND AT THE TIME OF DRILLING. SUBSURFACE CONDITIONS MAY DIFFER AT OTHER LOCATIONS AND MAY CHANGE AT THIS LOCATION WITH THE PASSAGE OF TIME. THE DATA PRESENTED IS A SIMPLIFICATION OF THE ACTUAL CONDITIONS ENCOUNTERED.

FIGURE
A-10

BORING RECORD

PROJECT NAME	PROJECT NUMBER	BORING
City of Redlands Potable Water Facilities	SD691	**HA-11**

SITE LOCATION	START	FINISH	SHEET NO.
Sunset	5/5/2021	5/5/2021	1 of 1

DRILLING COMPANY	DRILLING METHOD	LOGGED BY	CHECKED BY
Group Delta Consultants	Hand Auger	SN	KC

DRILLING EQUIPMENT	BORING DIA. (in)	TOTAL DEPTH (ft)	GROUND ELEV (ft)	DEPTH/*ELEV.* GROUNDWATER (ft)
Hand Auger and Shovel	3	2		▼ / *na*

SAMPLING METHOD
Auger and Shovel

NOTES

DEPTH (feet)	ELEVATION (feet)	SAMPLE TYPE	SAMPLE NO.	PENETRATION RESISTANCE (BLOWS / 6 IN)	BLOW/FT "N"	N_{60}	MOISTURE (%)	DRY DENSITY (pcf)	OTHER TESTS	DEPTH (feet)	GRAPHIC LOG	DESCRIPTION AND CLASSIFICATION
			B-1				1		PA COR			SILTY SAND (SM); brown; dry; mostly fine SAND; some fines; trace fine GRAVEL; non-plastic. (5% Gravel, 62% Sand, 33% fines).
5										5		Total Depth: 3 feet No Groundwater Observed

GROUP DELTA CONSULTANTS, INC.
9245 Activity Road, Suite 103
San Diego, California 92126

THIS SUMMARY APPLIES ONLY AT THE LOCATION OF THIS BORING AND AT THE TIME OF DRILLING. SUBSURFACE CONDITIONS MAY DIFFER AT OTHER LOCATIONS AND MAY CHANGE AT THIS LOCATION WITH THE PASSAGE OF TIME. THE DATA PRESENTED IS A SIMPLIFICATION OF THE ACTUAL CONDITIONS ENCOUNTERED.

FIGURE
A-11

BORING RECORD

PROJECT NAME	PROJECT NUMBER	BORING
City of Redlands Potable Water Facilities	SD691	**HA-12**

SITE LOCATION	START	FINISH	SHEET NO.
Country Club 1 & 2	5/5/2021	5/5/2021	1 of 1

DRILLING COMPANY	DRILLING METHOD	LOGGED BY	CHECKED BY
Group Delta Consultants	Hand Auger	SN	KC

DRILLING EQUIPMENT	BORING DIA. (in)	TOTAL DEPTH (ft)	GROUND ELEV (ft)	DEPTH/*ELEV.* GROUNDWATER (ft)
Hand Auger and Shovel	3	3		▼ / *na*

SAMPLING METHOD
Auger and Shovel

NOTES

DEPTH (feet)	ELEVATION (feet)	SAMPLE TYPE	SAMPLE NO.	PENETRATION RESISTANCE (BLOWS / 6 IN)	BLOW/FT "N"	N_{60}	MOISTURE (%)	DRY DENSITY (pcf)	OTHER TESTS	DEPTH (feet)	GRAPHIC LOG	DESCRIPTION AND CLASSIFICATION
			B-1				12		%200 COR			SILTY SAND (SM); moist; grayish brown; mostly fine SAND; some fines; non-plastic; roots and organics in upper 2'. (31% Fines)
												Total Depth: 3 feet No Groundwater Observed
5										5		

GDC_LOG_BORING_MMX_SOIL_SD SD691 LOGS.GPJ GDCLOG.GDT 7/28/21

GROUP DELTA CONSULTANTS, INC.
9245 Activity Road, Suite 103
San Diego, California 92126

THIS SUMMARY APPLIES ONLY AT THE LOCATION OF THIS BORING AND AT THE TIME OF DRILLING. SUBSURFACE CONDITIONS MAY DIFFER AT OTHER LOCATIONS AND MAY CHANGE AT THIS LOCATION WITH THE PASSAGE OF TIME. THE DATA PRESENTED IS A SIMPLIFICATION OF THE ACTUAL CONDITIONS ENCOUNTERED.

FIGURE
A-12

BORING RECORD

PROJECT NAME	PROJECT NUMBER	BORING
City of Redlands Potable Water Facilities	SD691	**HA-13**

SITE LOCATION	START	FINISH	SHEET NO.
Smiley	5/5/2021	5/5/2021	1 of 1

DRILLING COMPANY	DRILLING METHOD	LOGGED BY	CHECKED BY
Group Delta Consultants	Hand Auger	SN	KC

DRILLING EQUIPMENT	BORING DIA. (in)	TOTAL DEPTH (ft)	GROUND ELEV (ft)	DEPTH/*ELEV.* GROUNDWATER (ft)
Hand Auger and Shovel	3	3		▼ / *na*

SAMPLING METHOD
Auger and Shovel

NOTES

DEPTH (feet)	ELEVATION (feet)	SAMPLE TYPE	SAMPLE NO.	PENETRATION RESISTANCE (BLOWS / 6 IN)	BLOW/FT "N"	N_{60}	MOISTURE (%)	DRY DENSITY (pcf)	OTHER TESTS	DEPTH (feet)	GRAPHIC LOG	DESCRIPTION AND CLASSIFICATION
			B-1				4		%200 COR			SILTY SAND with GRAVEL (SM); dark yellowish brown; dry to moist; mostly fine to medium SAND; little to some fines; few GRAVEL; non-plastic. (26% Fines)
5										5		Total Depth: 3 feet No Groundwater Observed

GDC_LOG_BORING_MMX_SOIL_SD SD691 LOGS.GPJ GDCLOG.GDT 7/28/21

GROUP DELTA CONSULTANTS, INC.
9245 Activity Road, Suite 103
San Diego, California 92126

THIS SUMMARY APPLIES ONLY AT THE LOCATION OF THIS BORING AND AT THE TIME OF DRILLING. SUBSURFACE CONDITIONS MAY DIFFER AT OTHER LOCATIONS AND MAY CHANGE AT THIS LOCATION WITH THE PASSAGE OF TIME. THE DATA PRESENTED IS A SIMPLIFICATION OF THE ACTUAL CONDITIONS ENCOUNTERED.

FIGURE
A-13

BORING RECORD

PROJECT NAME	PROJECT NUMBER	BORING
City of Redlands Potable Water Facilities	SD691	**HA-14**

SITE LOCATION	START	FINISH	SHEET NO.
Arroyo	5/6/2021	5/6/2021	1 of 1

DRILLING COMPANY	DRILLING METHOD	LOGGED BY	CHECKED BY
Group Delta Consultants	Hand Auger	SN	KC

DRILLING EQUIPMENT	BORING DIA. (in)	TOTAL DEPTH (ft)	GROUND ELEV (ft)	DEPTH/*ELEV.* GROUNDWATER (ft)
Hand Auger and Shovel	3	3		▼ / *na*

SAMPLING METHOD
Auger and Shovel

NOTES

DEPTH (feet)	ELEVATION (feet)	SAMPLE TYPE	SAMPLE NO.	PENETRATION RESISTANCE (BLOWS / 6 IN)	BLOW/FT "N"	N_{60}	MOISTURE (%)	DRY DENSITY (pcf)	OTHER TESTS	DEPTH (feet)	GRAPHIC LOG	DESCRIPTION AND CLASSIFICATION
			B-1				4		PA COR			SILTY SAND (SM); yellowish brown; dry to moist; mostly SAND; some fines; trace to few GRAVEL; non-plastic. (7% Gravel, 56% Sand, 37% Fines)
												Total Depth: 3 feet No Groundwater Observed
5										5		

GDC_LOG_BORING_MMX_SOIL_SD SD691 LOGS.GPJ GDCLOG.GDT 7/28/21

GROUP DELTA CONSULTANTS, INC.
9245 Activity Road, Suite 103
San Diego, California 92126

THIS SUMMARY APPLIES ONLY AT THE LOCATION OF THIS BORING AND AT THE TIME OF DRILLING. SUBSURFACE CONDITIONS MAY DIFFER AT OTHER LOCATIONS AND MAY CHANGE AT THIS LOCATION WITH THE PASSAGE OF TIME. THE DATA PRESENTED IS A SIMPLIFICATION OF THE ACTUAL CONDITIONS ENCOUNTERED.

FIGURE
A-14

BORING RECORD

PROJECT NAME	PROJECT NUMBER	BORING
City of Redlands Potable Water Facilities	SD691	**HA-15**

SITE LOCATION	START	FINISH	SHEET NO.
Mill Creek 1 & 2	5/6/2021	5/6/2021	1 of 1

DRILLING COMPANY	DRILLING METHOD	LOGGED BY	CHECKED BY
Group Delta Consultants	Hand Auger	SN	KC

DRILLING EQUIPMENT	BORING DIA. (in)	TOTAL DEPTH (ft)	GROUND ELEV (ft)	DEPTH/*ELEV.* GROUNDWATER (ft)
Hand Auger and Shovel	3	1		▼ / *na*

SAMPLING METHOD: Auger and Shovel

NOTES:

DEPTH (feet)	ELEVATION (feet)	SAMPLE TYPE	SAMPLE NO.	PENETRATION RESISTANCE (BLOWS / 6 IN)	BLOW/FT "N"	N_{60}	MOISTURE (%)	DRY DENSITY (pcf)	OTHER TESTS	DEPTH (feet)	GRAPHIC LOG	DESCRIPTION AND CLASSIFICATION
			B-1				4		PA COR EI PI			SILTY SAND with GRAVEL (SM); moist; mostly fine SAND; some fines; little GRAVEL; non-plastic; gravel and cobbles more abundant in hillside exposures. (15% Gravel, 44% Sand, 41% Fines)
												Total Depth: 3 feet Refusal on Cobbles No Groundwater Observed
5										5		

GDC_LOG_BORING_MMX_SOIL_SD SD691 LOGS.GPJ GDCLOG.GDT 7/28/21

GROUP DELTA CONSULTANTS, INC.
9245 Activity Road, Suite 103
San Diego, California 92126

THIS SUMMARY APPLIES ONLY AT THE LOCATION OF THIS BORING AND AT THE TIME OF DRILLING. SUBSURFACE CONDITIONS MAY DIFFER AT OTHER LOCATIONS AND MAY CHANGE AT THIS LOCATION WITH THE PASSAGE OF TIME. THE DATA PRESENTED IS A SIMPLIFICATION OF THE ACTUAL CONDITIONS ENCOUNTERED.

FIGURE
A-15

SUMMARY

OF

CONE PENETRATION TEST DATA

Project:

City of Redlands Tank & Pump Station Assessment
Redlands, CA
April 27-28, 2021

Prepared for:

Ms. Kristen Chang
Group Delta Consultants, Inc.
370 Amapola Avenue, Ste 212
Torrance, CA 90501-7243
Office (310) 320-5100 / Fax (310) 320-2118

Prepared by:

KEHOE TESTING & ENGINEERING
5415 Industrial Drive
Huntington Beach, CA 92649-1518
Office (714) 901-7270 / Fax (714) 901-7289
www.kehoetesting.com

TABLE OF CONTENTS

1. **INTRODUCTION**

2. **SUMMARY OF FIELD WORK**

3. **FIELD EQUIPMENT & PROCEDURES**

4. **CONE PENETRATION TEST DATA & INTERPRETATION**

APPENDIX

- CPT Plots
- CPT Classification/Soil Behavior Chart
- Summary of Shear Wave Velocities
- CPT Data Files (sent via email)

SUMMARY
OF
CONE PENETRATION TEST DATA

1. INTRODUCTION

This report presents the results of a Cone Penetration Test (CPT) program carried out for the City of Redlands Tank & Pump Station Assessment project located in Redlands, California. The work was performed by Kehoe Testing & Engineering (KTE) on April 27-28, 2021. The scope of work was performed as directed by Group Delta Consultants, Inc. personnel.

2. SUMMARY OF FIELD WORK

The fieldwork consisted of performing CPT soundings at 13 locations to determine the soil lithology. A summary is provided in **TABLE 2.1**.

LOCATION	DEPTH OF CPT (ft)	COMMENTS/NOTES:
CPT-1	1.58	Refusal
CPT-1A	0.53	Refusal
CPT-1B	2.43	Refusal
CPT-2	2.76	Refusal
CPT-2A	2.43	Refusal
CPT-3	83.67	Refusal
CPT-4	61.16	Refusal
CPT-5	100.53	
CPT-6	11.03	Refusal
CPT-6A	8.47	Refusal
CPT-7	6.44	Refusal
CPT-8	65.04	Refusal
CPT-9	20.34	Refusal

TABLE 2.1 - Summary of CPT Soundings

3. FIELD EQUIPMENT & PROCEDURES

The CPT soundings were carried out by **KTE** using an integrated electronic cone system manufactured by Vertek. The CPT soundings were performed in accordance with ASTM standards (D5778). The cone penetrometers were pushed using a 30-ton CPT rig. The cone used during the program was a 15 cm^2 cone and recorded the following parameters at approximately 2.5 cm depth intervals:

- Cone Resistance (qc)
- Sleeve Friction (fs)
- Dynamic Pore Pressure (u)
- Inclination
- Penetration Speed

At locations CPT-3, CPT-4, CPT-5, CPT-6, CPT-7, CPT-8 & CPT-9, shear wave measurements were obtained at various depths. The shear wave is generated using an air-actuated hammer, which is located inside the front jack of the CPT rig. The cone has a triaxial geophone, which recorded the shear wave signal generated by the air hammer.

The above parameters were recorded and viewed in real time using a laptop computer. Data is stored at the KTE office for up to 2 years for future analysis and reference. A complete set of baseline readings was taken prior to each sounding to determine temperature shifts and any zero load offsets. Monitoring base line readings ensures that the cone electronics are operating properly.

4. CONE PENETRATION TEST DATA & INTERPRETATION

The Cone Penetration Test data is presented in graphical form in the attached Appendix. These plots were generated using the CPeT-IT program. Penetration depths are referenced to ground surface. The soil behavior type on the CPT plots is derived from the attached CPT SBT plot (Robertson, "Interpretation of Cone Penetration Test…", 2009) and presents major soil lithologic changes. The stratigraphic interpretation is based on relationships between cone resistance (qc), sleeve friction (fs), and penetration pore pressure (u). The friction ratio (Rf), which is sleeve friction divided by cone resistance, is a calculated parameter that is used along with cone resistance to infer soil behavior type. Generally, cohesive soils (clays) have high friction ratios, low cone resistance and generate excess pore water pressures. Cohesionless soils (sands) have lower friction ratios, high cone bearing and generate little (or negative) excess pore water pressures.

The CPT data files have also been provided. These files can be imported in CPeT-IT (software by GeoLogismiki) and other programs to calculate various geotechnical parameters.

It should be noted that it is not always possible to clearly identify a soil type based on qc, fs and u. In these situations, experience, judgement and an assessment of the pore pressure data should be used to infer the soil behavior type.

If you have any questions regarding this information, please do not hesitate to call our office at (714) 901-7270.

Sincerely,

KEHOE TESTING & ENGINEERING

Steven P. Kehoe
President

05/07/21-wt-2520

APPENDIX

Kehoe Testing and Engineering
714-901-7270
steve@kehoetesting.com
www.kehoetesting.com

Project: Group Delta Consultants
Location: City of Redlands Tank & Pump Station Assessment

CPT-1
Total depth: 1.58 ft, Date: 4/27/2021

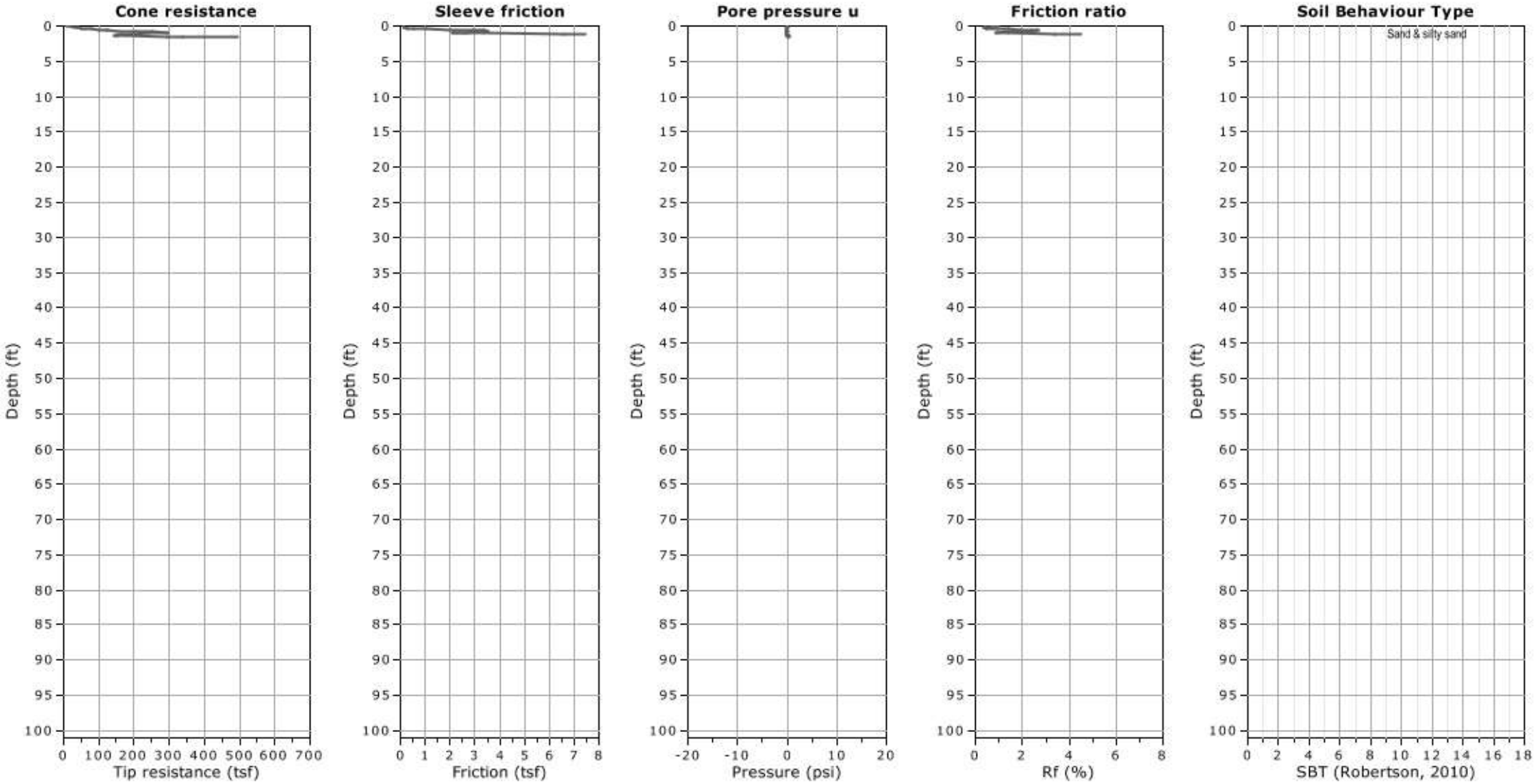

Kehoe Testing and Engineering
714-901-7270
steve@kehoetesting.com
www.kehoetesting.com

Project: Group Delta Consultants
Location: City of Redlands Tank & Pump Station Assessment

CPT-1A
Total depth: 0.53 ft, Date: 4/27/2021

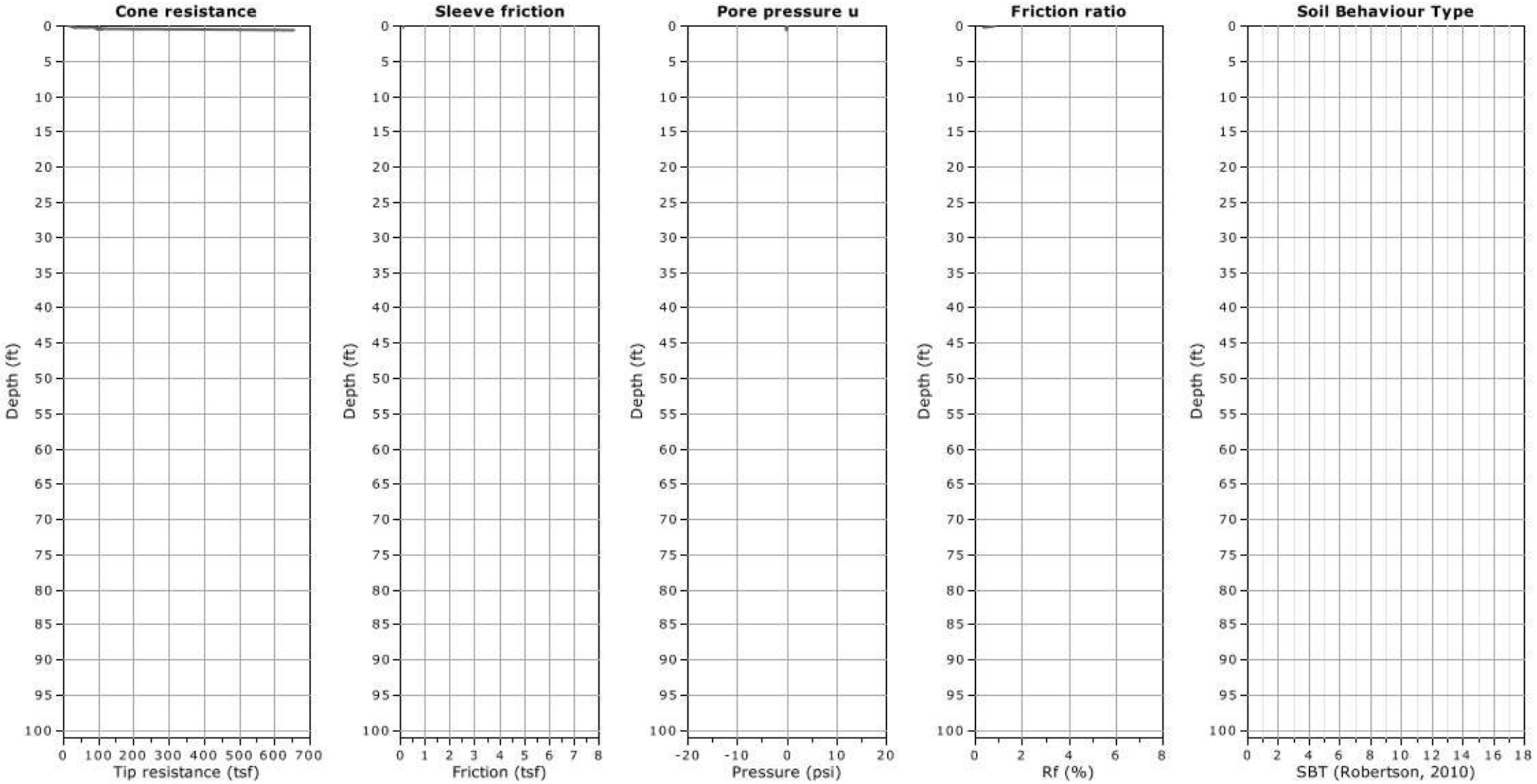

Kehoe Testing and Engineering
714-901-7270
steve@kehoetesting.com
www.kehoetesting.com

Project: Group Delta Consultants
Location: City of Redlands Tank & Pump Station Assessment

CPT-1B
Total depth: 2.43 ft, Date: 4/27/2021

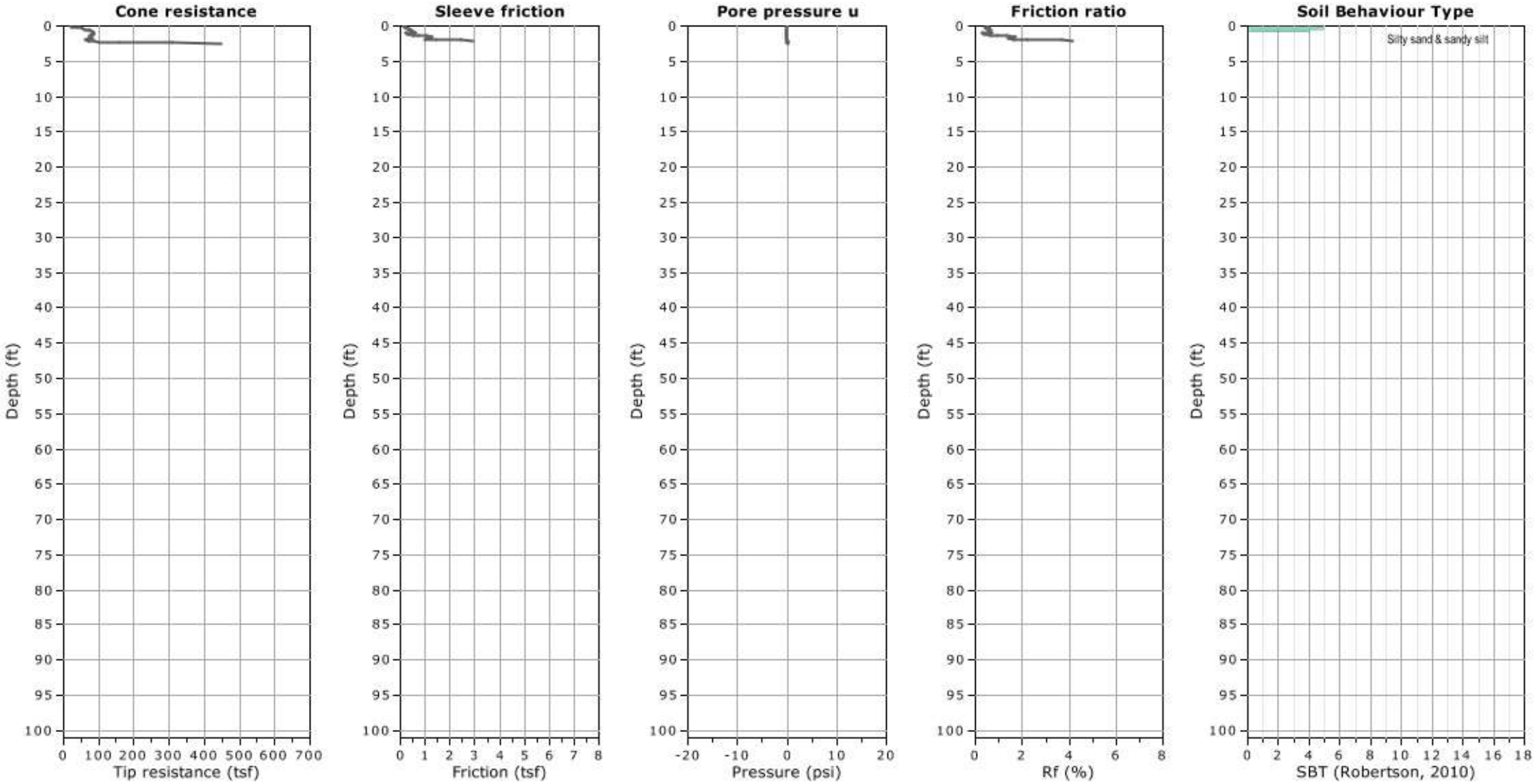

Kehoe Testing and Engineering
714-901-7270
steve@kehoetesting.com
www.kehoetesting.com

Project: Group Delta Consultants
Location: City of Redlands Tank & Pump Station Assessment

CPT-2
Total depth: 2.76 ft, Date: 4/27/2021

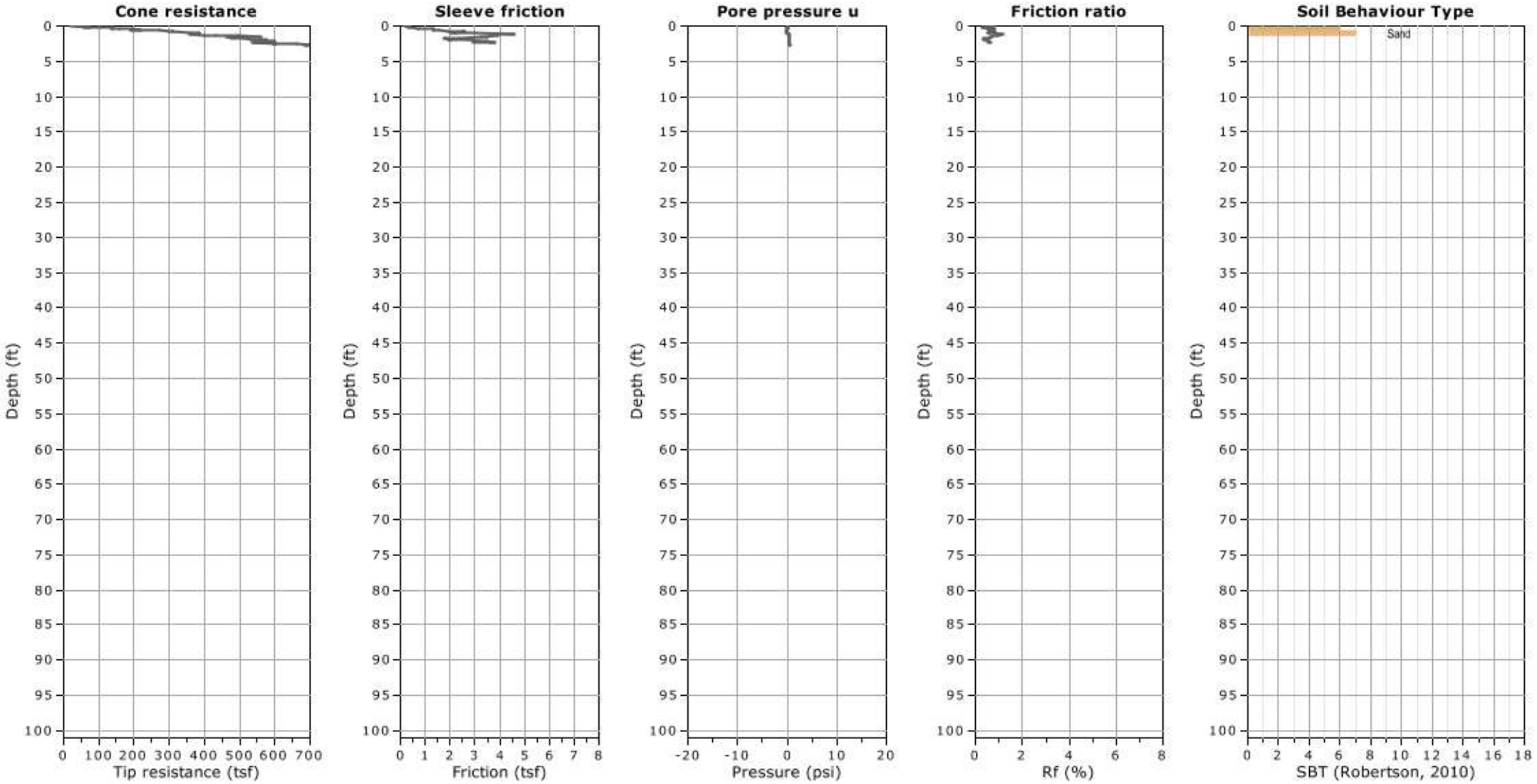

Kehoe Testing and Engineering
714-901-7270
steve@kehoetesting.com
www.kehoetesting.com

Project: Group Delta Consultants
Location: City of Redlands Tank & Pump Station Assessment

CPT-2A
Total depth: 2.43 ft, Date: 4/27/2021

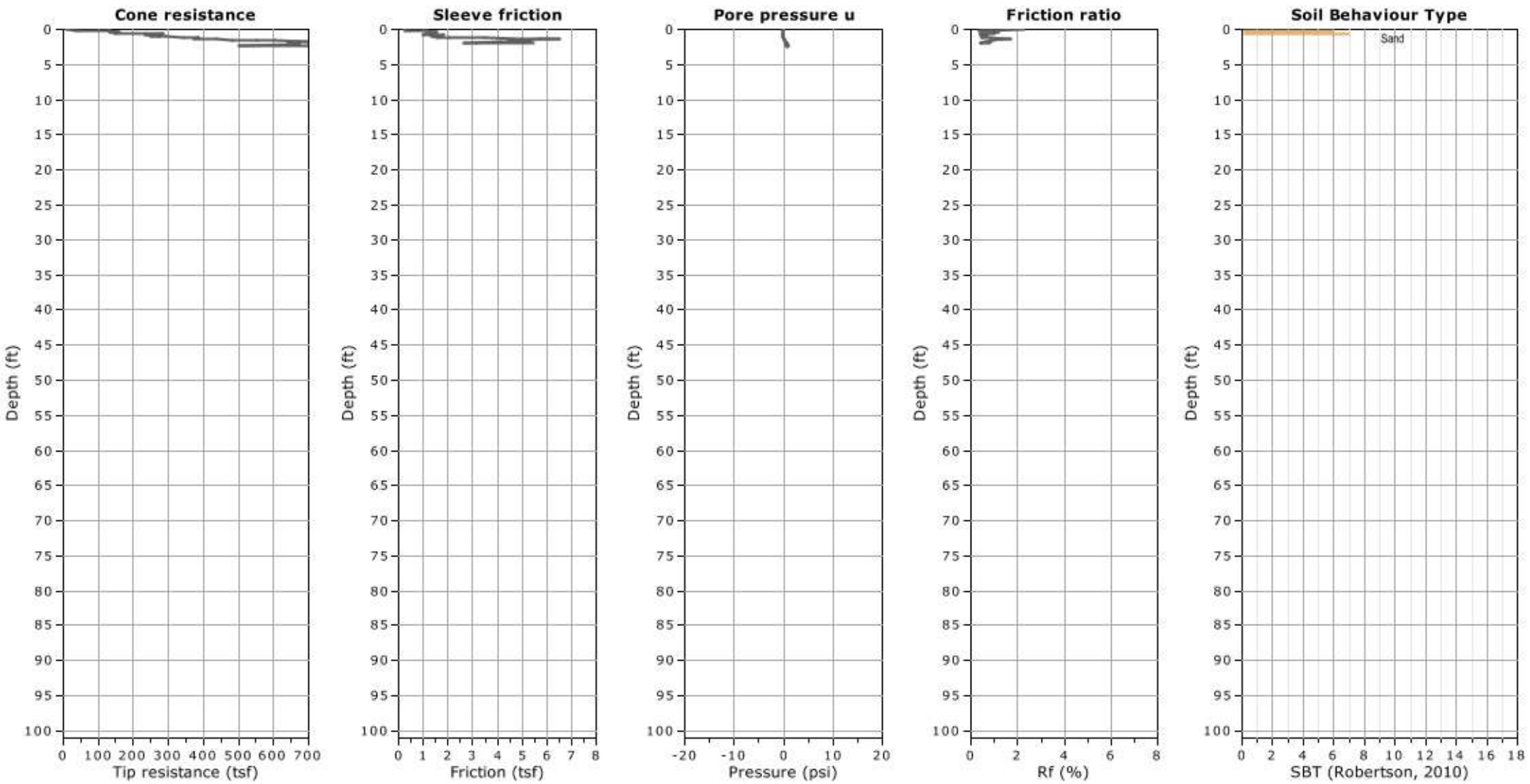

Kehoe Testing and Engineering
714-901-7270
steve@kehoetesting.com
www.kehoetesting.com

Project: Group Delta Consultants
Location: City of Redlands Tank & Pump Station Assessment

CPT-3
Total depth: 83.67 ft, Date: 4/27/2021

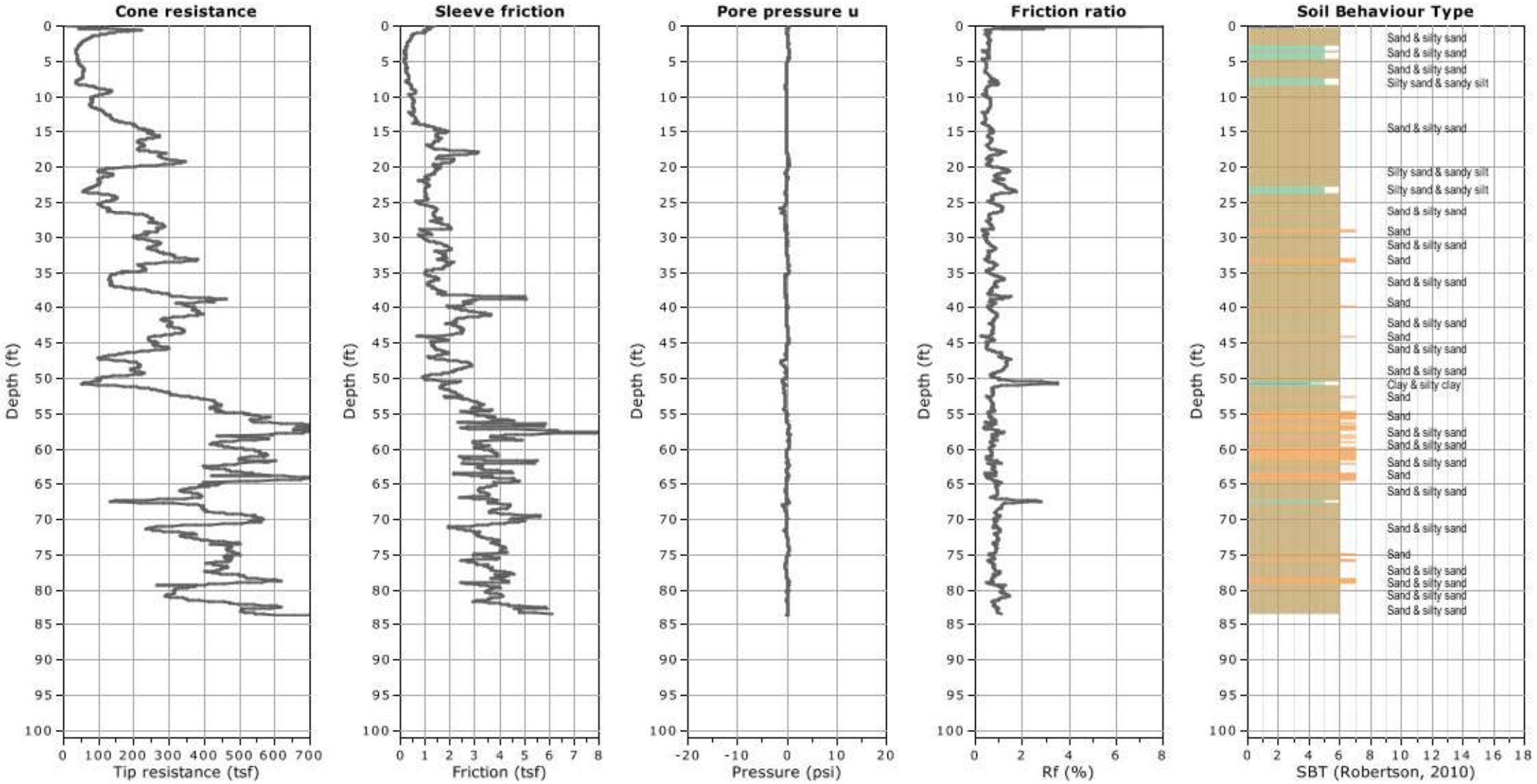

Kehoe Testing and Engineering
714-901-7270
steve@kehoetesting.com
www.kehoetesting.com

Project: Group Delta Consultants
Location: City of Redlands Tank & Pump Station Assessment

CPT-4
Total depth: 61.16 ft, Date: 4/27/2021

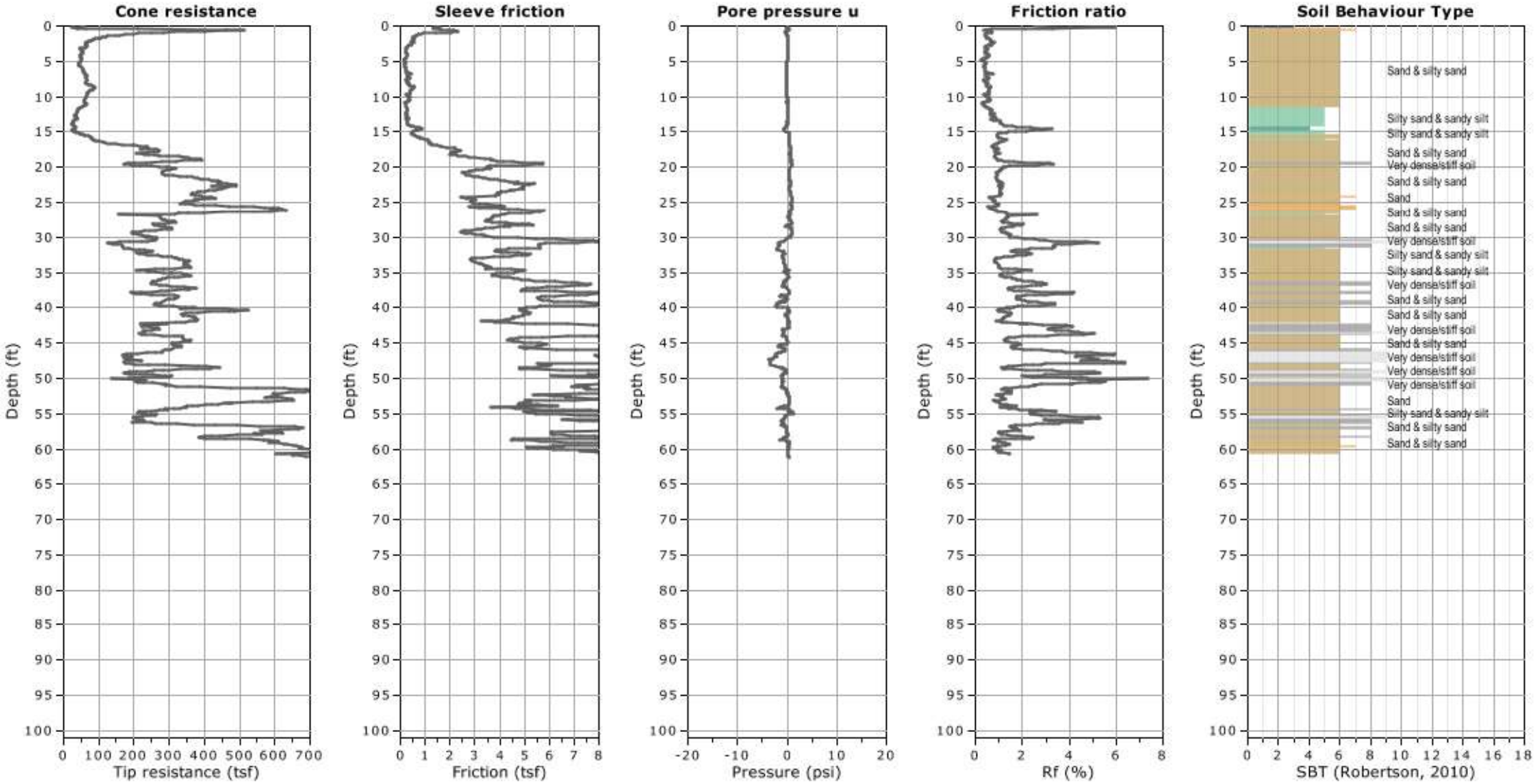

Kehoe Testing and Engineering
714-901-7270
steve@kehoetesting.com
www.kehoetesting.com

Project: Group Delta Consultants
Location: City of Redlands Tank & Pump Station Assessment

CPT-5
Total depth: 100.53 ft, Date: 4/28/2021

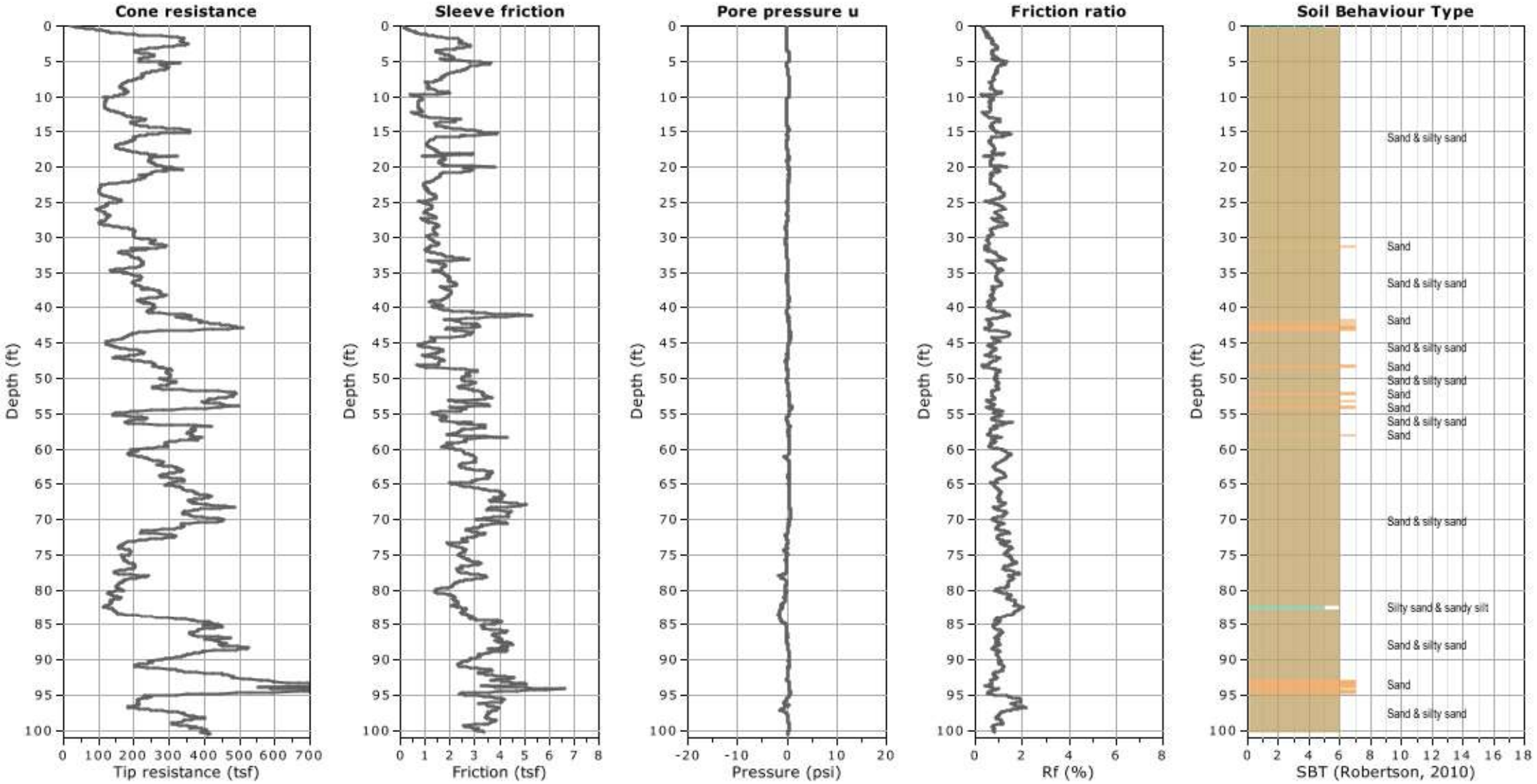

Kehoe Testing and Engineering
714-901-7270
steve@kehoetesting.com
www.kehoetesting.com

Project: Group Delta Consultants
Location: City of Redlands Tank & Pump Station Assessment

CPT-6
Total depth: 11.03 ft, Date: 4/28/2021

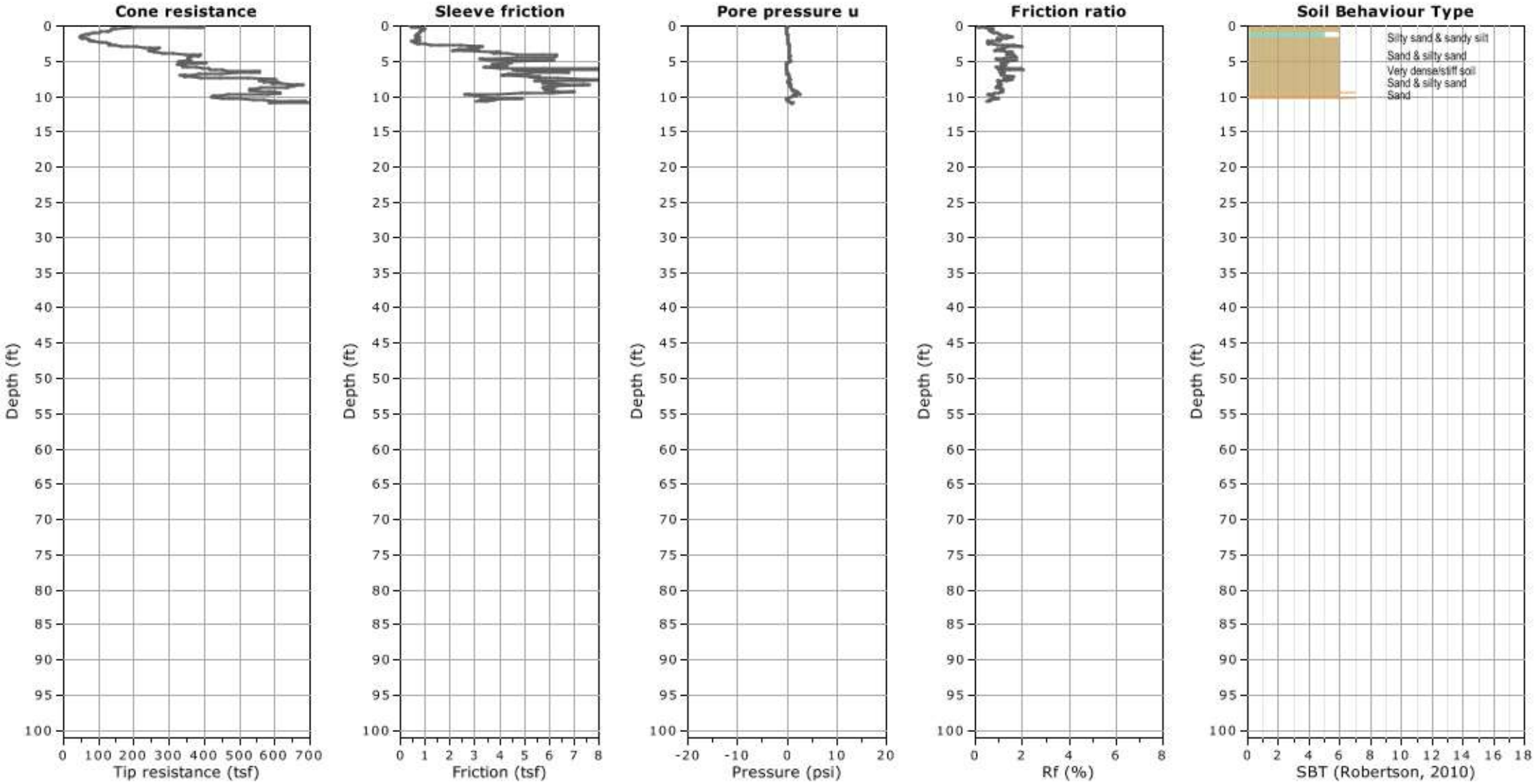

Kehoe Testing and Engineering
714-901-7270
steve@kehoetesting.com
www.kehoetesting.com

Project: Group Delta Consultants
Location: City of Redlands Tank & Pump Station Assessment

CPT-6A
Total depth: 8.47 ft, Date: 4/28/2021

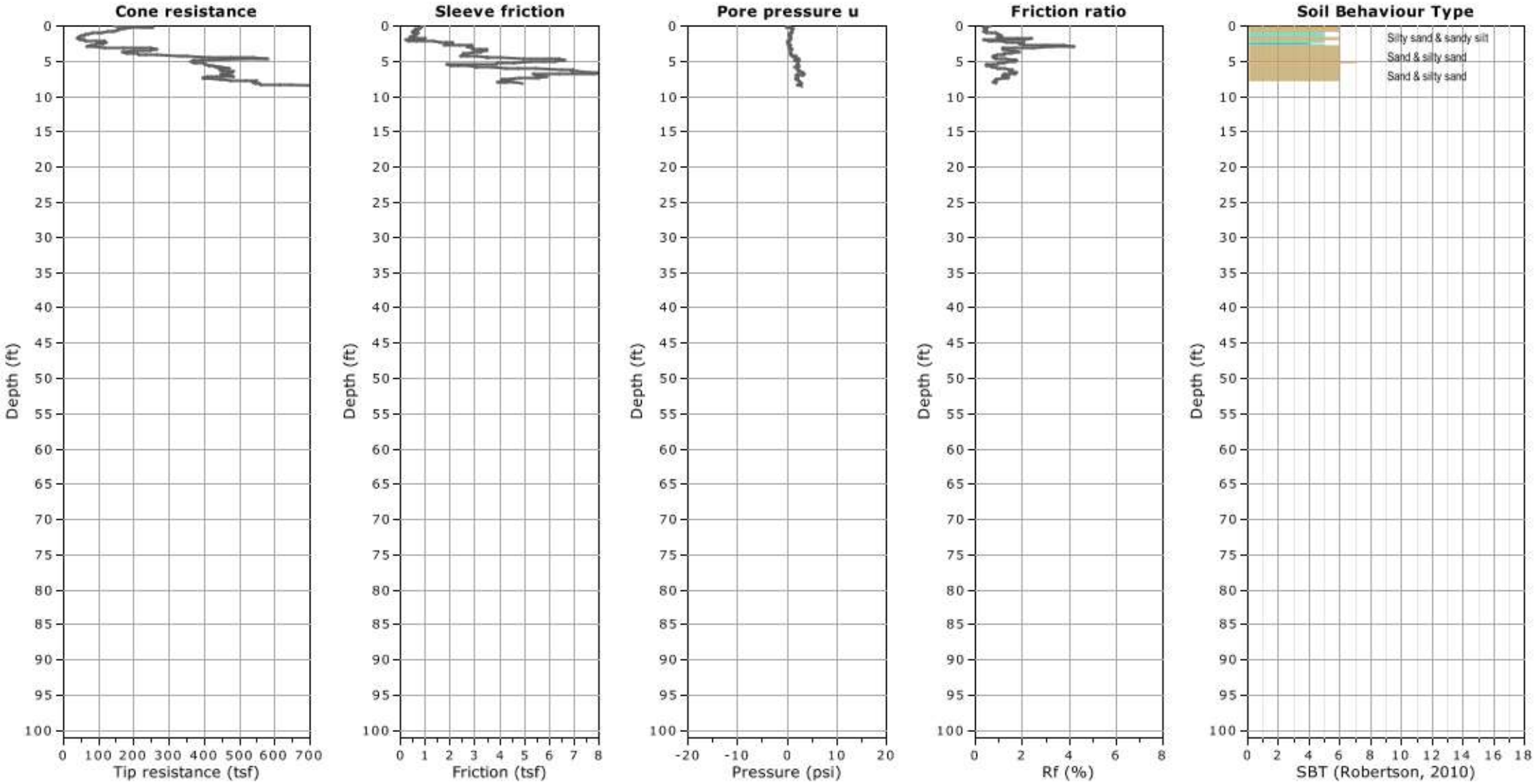

Kehoe Testing and Engineering
714-901-7270
steve@kehoetesting.com
www.kehoetesting.com

Project: Group Delta Consultants
Location: City of Redlands Tank & Pump Station Assessment

CPT-7
Total depth: 6.44 ft, Date: 4/28/2021

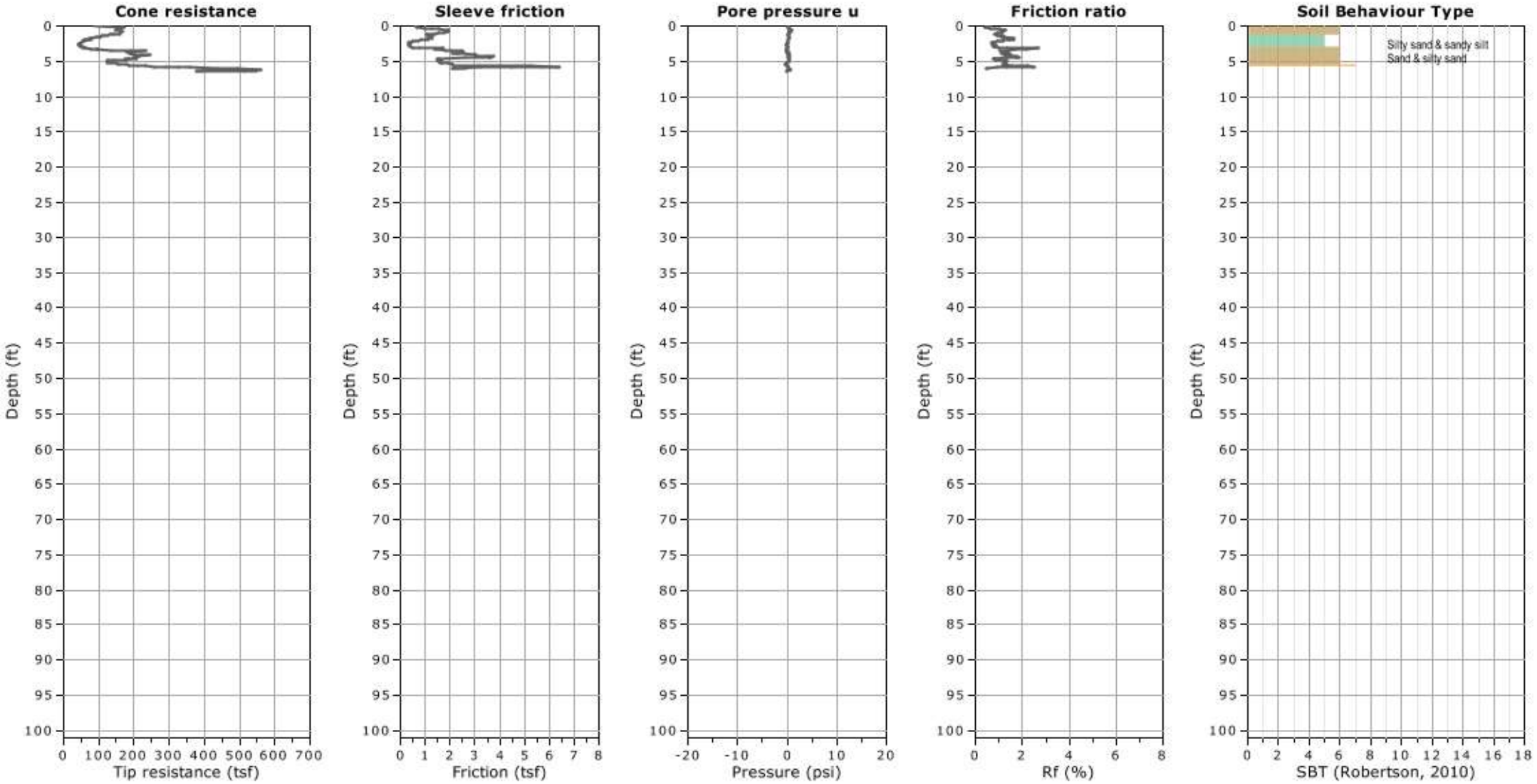

Kehoe Testing and Engineering
714-901-7270
steve@kehoetesting.com
www.kehoetesting.com

Project: Group Delta Consultants
Location: City of Redlands Tank & Pump Station Assessment

CPT-8
Total depth: 65.04 ft, Date: 4/28/2021

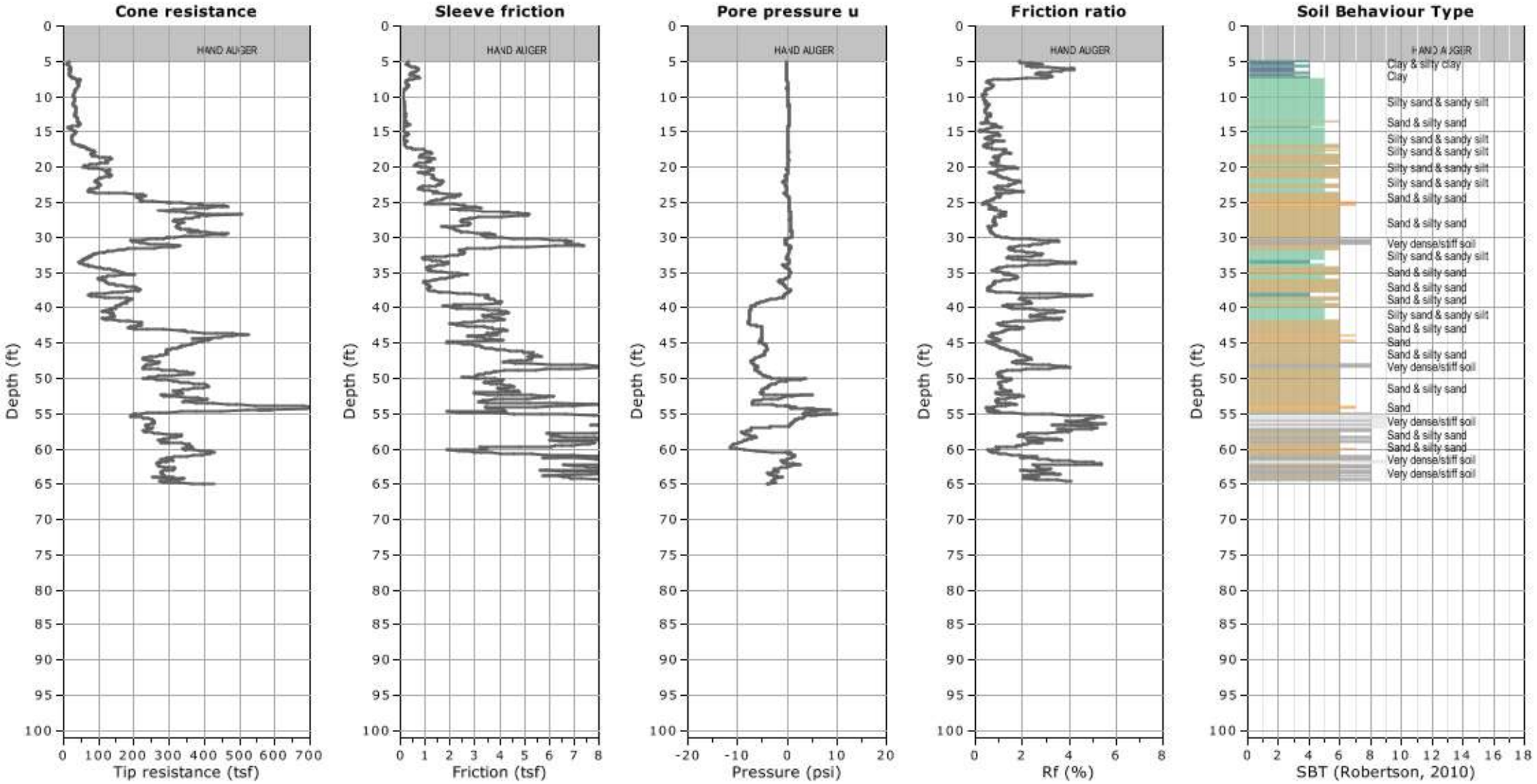

Kehoe Testing and Engineering
714-901-7270
steve@kehoetesting.com
www.kehoetesting.com

Project: Group Delta Consultants
Location: City of Redlands Tank & Pump Station Assessment

CPT-9
Total depth: 20.34 ft, Date: 4/28/2021

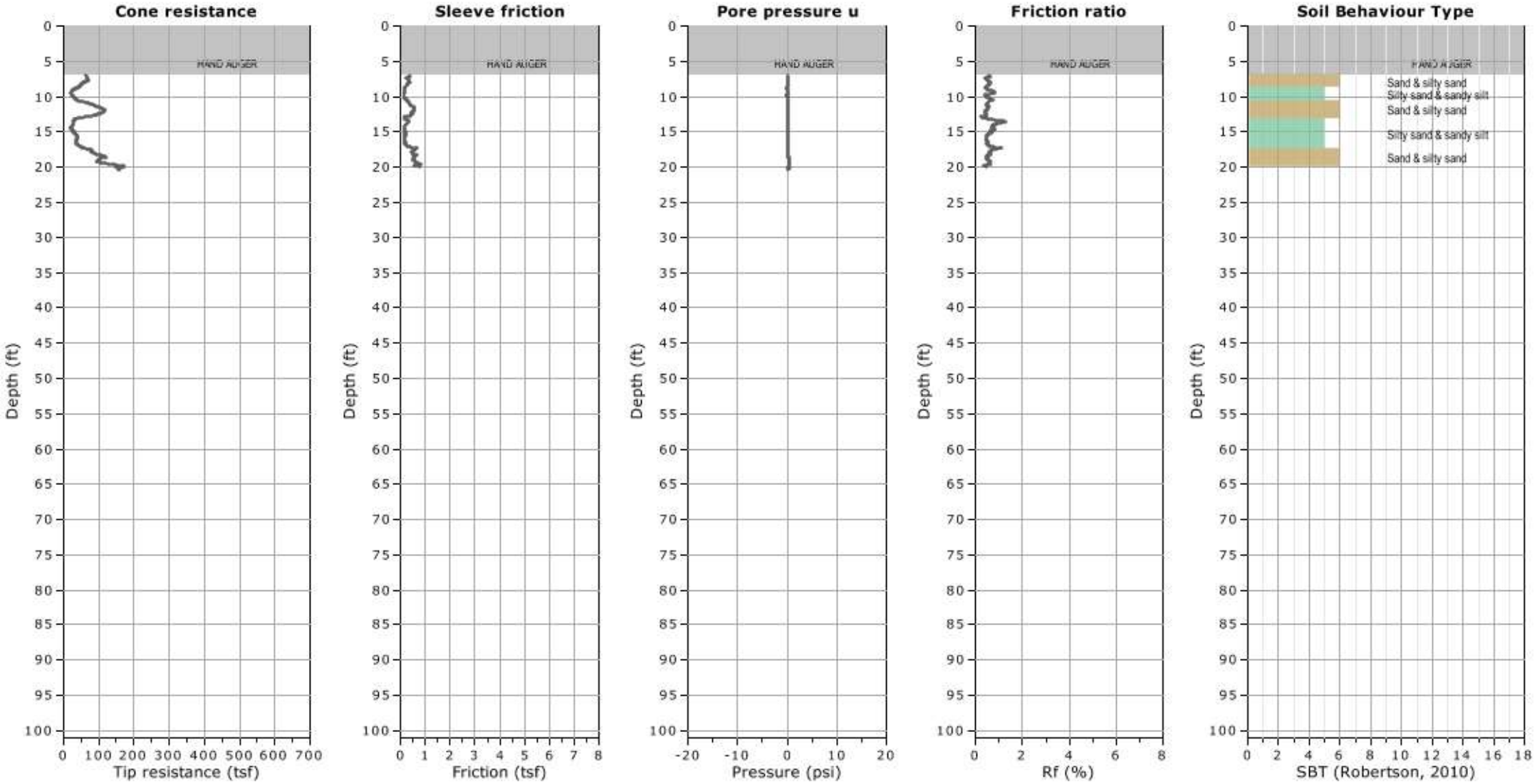

Kehoe Testing & Engineering
714-901-7270
steve@kehoetesting.com
www.kehoetesting.com

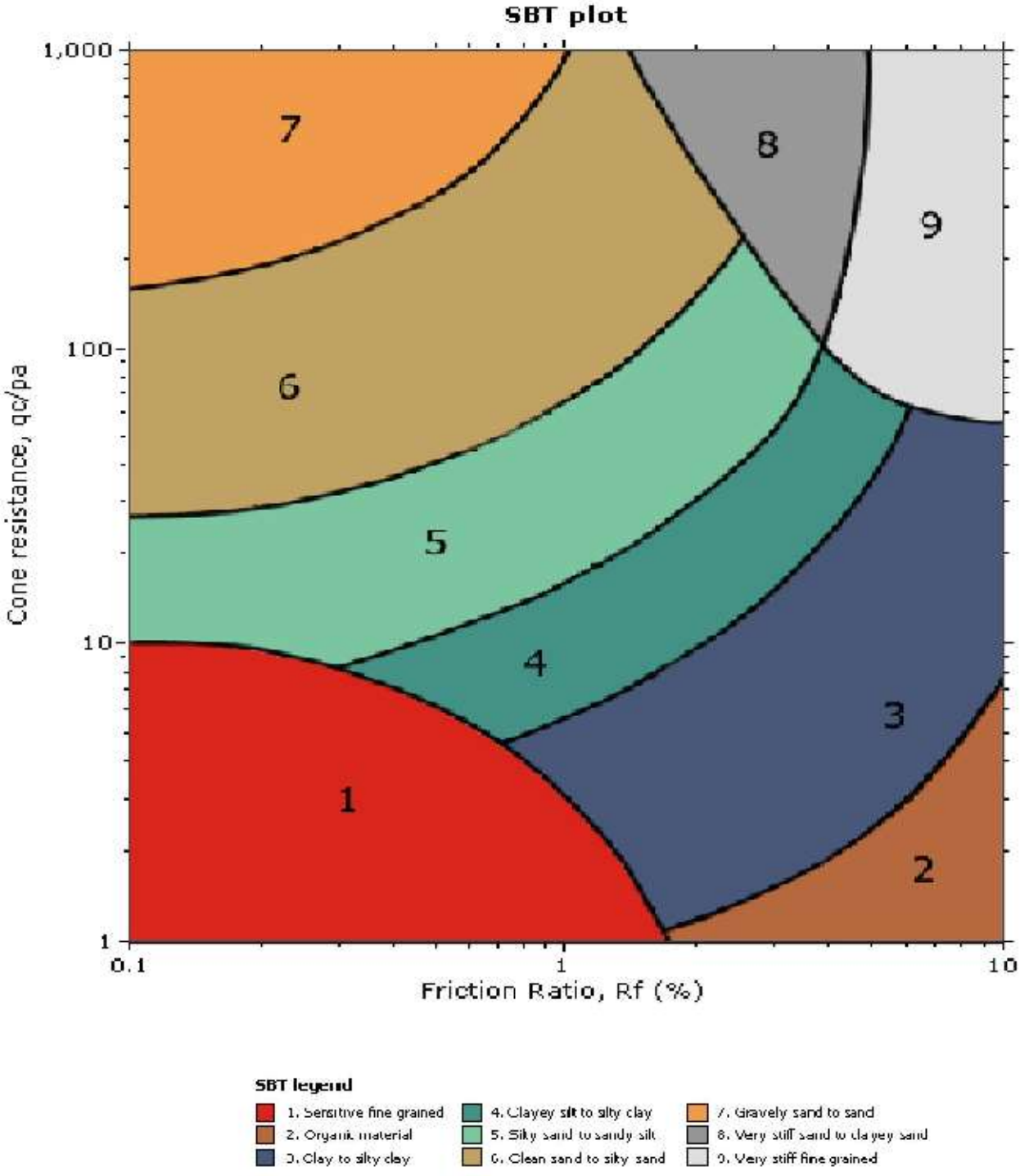

Group Delta Consultants
City of Redlands Tank & Pump Station Assessment
Redlands, CA

CPT Shear Wave Measurements

Location	Tip Depth (ft)	Geophone Depth (ft)	Travel Distance (ft)	S-Wave Arrival (msec)	S-Wave Velocity from Surface (ft/sec)	Interval S-Wave Velocity (ft/sec)
CPT-3	5.02	4.02	4.49	6.96	645	
	10.04	9.04	9.26	13.80	671	697
	14.99	13.99	14.13	19.80	714	812
	20.08	19.08	19.18	25.14	763	946
	25.10	24.10	24.18	30.62	790	912
	30.02	29.02	29.09	35.64	816	977
	35.07	34.07	34.13	40.44	844	1050
	40.06	39.06	39.11	45.48	860	989
	45.08	44.08	44.13	49.88	885	1140
	50.00	49.00	49.04	53.32	920	1429
	55.05	54.05	54.09	57.40	942	1237
	60.01	59.01	59.04	60.04	983	1878
	65.06	64.06	64.09	63.60	1008	1418
	70.01	69.01	69.04	67.76	1019	1189
	75.10	74.10	74.13	72.04	1029	1189
	80.02	79.02	79.05	76.44	1034	1118
	83.69	82.69	82.71	78.78	1050	1568
CPT-4	5.02	4.02	4.49	6.00	748	
	10.01	9.01	9.23	12.40	744	741
	16.08	15.08	15.21	20.02	760	785
	20.01	19.01	19.11	23.12	827	1259
	25.07	24.07	24.15	26.20	922	1636
	30.05	29.05	29.12	28.36	1027	2299
	35.07	34.07	34.13	30.72	1111	2123
	40.03	39.03	39.08	33.64	1162	1696
	45.05	44.05	44.10	35.74	1234	2388
	50.07	49.07	49.11	38.20	1286	2039
	55.05	54.05	54.09	40.36	1340	2304
	60.04	59.04	59.07	42.48	1391	2352

Shear Wave Source Offset - 2 ft

S-Wave Velocity from Surface = Travel Distance/S-Wave Arrival
Interval S-Wave Velocity = (Travel Dist2-Travel Dist1)/(Time2-Time1)

Group Delta Consultants
City of Redlands Tank & Pump Station Assessment
Redlands, CA

CPT Shear Wave Measurements

Location	Tip Depth (ft)	Geophone Depth (ft)	Travel Distance (ft)	S-Wave Arrival (msec)	S-Wave Velocity from Surface (ft/sec)	Interval S-Wave Velocity (ft/sec)
CPT-5	5.02	4.02	4.49	6.20	724	
	10.04	9.04	9.26	12.08	766	811
	16.04	15.04	15.17	19.36	784	812
	21.06	20.06	20.16	25.04	805	878
	25.07	24.07	24.15	29.12	829	979
	30.05	29.05	29.12	34.68	840	893
	35.07	34.07	34.13	39.08	873	1139
	40.06	39.06	39.11	43.04	909	1258
	45.11	44.11	44.16	47.64	927	1097
	50.03	49.03	49.07	52.68	931	975
	55.05	54.05	54.09	56.84	952	1206
	60.04	59.04	59.07	61.56	960	1057
	65.03	64.03	64.06	66.48	964	1014
	70.01	69.01	69.04	70.88	974	1131
	75.03	74.03	74.06	75.80	977	1020
	80.05	79.05	79.08	80.08	987	1172
	85.01	84.01	84.03	84.16	999	1215
	90.06	89.06	89.08	87.56	1017	1485
	95.05	94.05	94.07	91.20	1031	1371
	100.56	99.56	99.58	94.54	1053	1649
CPT-6	5.05	4.05	4.52	5.80	779	
	10.04	9.04	9.26	10.60	873	988
CPT-7	5.02	4.02	4.49	6.52	689	

Shear Wave Source Offset - 2 ft

S-Wave Velocity from Surface = Travel Distance/S-Wave Arrival
Interval S-Wave Velocity = (Travel Dist2-Travel Dist1)/(Time2-Time1)

Group Delta Consultants
City of Redlands Tank & Pump Station Assessment
Redlands, CA

CPT Shear Wave Measurements

Location	Tip Depth (ft)	Geophone Depth (ft)	Travel Distance (ft)	S-Wave Arrival (msec)	S-Wave Velocity from Surface (ft/sec)	Interval S-Wave Velocity (ft/sec)
CPT-8	5.02	4.02	4.49	5.40	831	
	11.02	10.02	10.22	12.54	815	802
	15.03	14.03	14.17	18.64	760	648
	21.03	20.03	20.13	24.20	832	1072
	25.03	24.03	24.11	27.20	887	1328
	30.02	29.02	29.09	31.16	934	1257
	40.06	39.06	39.11	39.80	983	1160
	45.05	44.05	44.10	43.72	1009	1271
	50.00	49.00	49.04	48.04	1021	1145
	55.02	54.02	54.06	51.60	1048	1409
	60.04	59.04	59.07	54.24	1089	1900
	65.03	64.03	64.06	56.72	1129	2011
CPT-9	5.02	4.02	4.49	6.40	702	
	10.01	9.01	9.23	12.20	757	817
	15.03	14.03	14.17	19.92	711	640
	20.01	19.01	19.11	25.98	736	816

Shear Wave Source Offset - 2 ft

S-Wave Velocity from Surface = Travel Distance/S-Wave Arrival
Interval S-Wave Velocity = (Travel Dist2-Travel Dist1)/(Time2-Time1)

APPENDIX B

GEOPHYSICAL REPORT (SubSurface Surveys, 2021)

Subsurface Surveys & Associates, Inc.
2075 Corte Del Nogal, Suite W Carlsbad, CA 92011
Phone: (760) 476-0492 Fax: (760) 476-0493

Group Delta
9245 Activity Road, Suite 103
San Diego, CA

May 24, 2021

Attn: Kristen Chang

Re: Seismic Survey Summary Report
Redlands-Yucaipa Water Tank Sites

This report covers the results of seismic surveys performed at twelve water storage tank facilities in the Redlands and Yucaipa area. The main objective was to record low frequency surface wave data to determine shear wave velocity to a depth of 100 feet, if possible. This data is to be used for seismic response spectra analysis and engineering retrofit work. A secondary objective involved using seismic refraction p-wave measurements, at three of the sites, to produce 2-D cross sections for stratigraphic analysis.

The fieldwork was conducted during May 4-7, 2021. One seismic traverse was laid out at each tank site. The location and orientation of the traverses are shown on Figures 1, 4, 8, 12, 15, and 19.

GEOLOGIC SETTING

The geologic maps of the Yucaipa and Redlands 7.5 minute quadrangles, U.S.G.S. Open File Reports 03-301 and 03-302, from 2003 were used to identify the geologic units underlying the survey areas. A summary is provided below.

Qvyf - Very young alluvial fan deposits (late Holocene) - Unconsolidated to slightly consolidated sand and gravel.
Qya - Young axial-valley deposits (middle Holocene) - Slightly to moderately consolidated silt, sand and gravel.
Qvoa - Very old axial-valley deposits (middle to early Pleistocene) - Dominated by sand with minor gravel.
QTstu - Upper beds of the San Timoteo formation (Pleistocene and Pliocene) - Nonmarine sandstone and conglomerate.
Mzfg - Foliated granitoid rock (Mesozoic).

Tank Site	Line no.	Geologic Unit
Sand Canyon	1	**Mzfg**
Crafton Hills	2	**Mzfg**
Fifth Avenue	3	**Qvoa**

Tank Site	Line no.	Geologic Unit
Sunset	4	**QTstu**
Country Club	5	**Qvoa**
Margarita	6	**Qvoa**
Smiley	7	**Qvoa**
Dearborn	8	**Qya**
Arroyo	9	**Qvoa/QTstu**
Mill Creek	10	**Qvyf/Qofa**
Ward	11	**Qya**
Agate	12	**Qya**

Note: Lines 9 and 10 were close to the contact between the two listed geologic units.

DATA ACQUISITION AND FIELD METHODS

Seismic data were recorded with a Bison 9024 digital seismograph using 4.5 and 28 Hz geophones. The standard spread layout used 24 geophones with spacing that varied from 3-10 feet. Three shotpoints were used, one off each end (5-10 foot offset) and one within the interior of the spread. Shear wave records are 750 milliseconds in length. Refraction p-wave recording used five shotpoints, with three within the interior or the spread.

Compressional wave energy was created by sledge hammer impacts on a metal plate. The signal enhancement feature of the seismograph allowed returns from repeated hits to be stacked, thus improving the signal. Each record was stored digitally on an internal hard disk.

The endpoints of each survey line are marked by a labeled wooden stake. The latitude and longitude coordinates of the stakes were recorded with a hand held Garmin GPS receiver, when not obscured by trees, and used to prepare the line location maps.

DESCRIPTION OF SEISMIC METHODS

MASW – The Multi-channel Analysis of Surface Waves method uses low frequency surface waves, commonly referred to as “ground roll”, to extract shear wave (S-wave) velocity data verses depth in the subsurface. This information is commonly used for soil classification, tower and foundation design, and seismic response spectra calculations.

This method does not measure shear wave velocity directly. Rather, dispersion curves are extracted from the raw multi-channel field records and inverted to produce a one-dimensional S-wave velocity profile.

Seismic Refraction

The refraction method involves measuring the total time for compressional waves to travel from

a shotpoint through the subsurface to a set of geophones placed linearly along the ground. Based on Snell's Law, when two or more layers are present with increasingly higher acoustic velocity, waves become critically refracted across the layer boundaries and begin traveling at the speed of the underlying layer. The advancing waves then generate new wavefronts back to the ground surface. The first surge of energy hitting the geophone is termed the "first arrival" and is depicted on the seismogram as a high angle deflection along each trace.

Recognition of direct wave arrivals (non-refracted) verses refracted waves is a key element of refraction interpretation. To assist this process, the first arrival times measured from the seismic records are plotted on graphs of time verses distance called Time-Distance graphs. Based on changes in slope on the graphs, a preliminary layer number (i.e. 1, 2, 3) is assigned to each segment of the graph. The layer assignments together with time, distance and elevation data are input to a computer for additional processing.

SEISMIC PROCESSING AND INVERSION MODELING

Surface wave data was processed with SeisImager/SW software from Geometrics Inc. The software calculates shear wave velocity by mathematical inversion of the dispersive phase velocity of surface waves. In this application, Raleigh waves (also referred to as “ground roll”) are the main surface waves of interest. A summary of the steps involved is provided below.

Standard time-distance field records are converted from time domain to frequency domain using a phase velocity- frequency transformation. This yields dispersion curve plots of frequency (Hz) verses phase velocity in (ft/sec). A wave equation module then performs inversion modeling to produce plots of shear wave velocity verse depth.

Processing and interpretation of the p-wave data was accomplished with “SIPT2", an interactive inversion modeling program developed by James Scott for the U.S. Bureau of Mines. The inversion algorithm uses the delay time method to construct a first pass depth model. The model is then adjusted by an iterative ray tracing process that attempts to minimize the discrepancies between the total travel times calculated along ray paths and the observed travel times measured in the field.

This program calculates refractor velocity in two ways. First, apparent velocities from each shot are determined by the inverse slope of a best fit (least squares) line through datum-corrected travel times. True velocity is estimated from the apparent velocities by using the following equation:

$$Vt = 2(Vu \times Vd)/(Vu + Vd)$$

where Vt = true velocity
Vu = apparent up dip velocity
Vd = apparent down dip velocity

The second method uses a more sophisticated set of equations (the Hobson-Overton formula) developed by the Canadian Geological Survey. The final velocity assigned to the refractor is a weighted average of the results of the two methods. The weighting is based on the number of arrival times used in the computations.

SUMMARY OF RESULTS

Shear wave modeling results from MASW processing are displayed on graphs of velocity verses depth, following the line location maps. Many of the seismic lines were less than 200 feet in length due to limited space around the tanks. This partially accounts for the lack of penetration depth. A summary of the shear wave data is provided in Table 1 below.

Table 1. Shear Wave Velocity Summary

Line / length	Maximum data depth	S-wave velocity at max. depth	Vs 100 *
1 230 ft.	100 ft.	2357 ft/sec	1537.8 ft/sec
2 184	100	2500	1977.7
3 230	93	1426	1156.3
4 230	60	1213	1080.3
5 115	77	1599	1339.4
6 161	83	1768	1402.5
7 230	50	1426	1376.5
8 115	97	1787	1380.0
9 69	42	1028	1012.7
10 115	53	1288	1106.3
11 161	53	1454	1416.4
12 161	71	1712	1556.1

* Note: Vs 100 based on curve extrapolation if depth less than 100 feet.

Results from refraction analysis of the p-wave data recorded along Lines 3, 5 were prepared as layered cross sections (see Figures 6 and 10). The posted velocities represent averages as described in the previous section. Therefore, minor localized changes in velocity may occur along the profile.

The data from Line 9 showed evidence of significant lateral velocity gradients and the Layer 2 refraction interface was not continuous across the spread. As an alternative, a colored tomography model was prepared. This traverse was limited to 69 feet in length and the depth of exploration was only about 12 feet. However, it does show good detail of the distribution and thickness of the low velocity sediments beneath this area.

All data acquired during this survey is considered confidential and is available for review by your staff at any time. We appreciate the opportunity to participate in this project. Please call if there are any questions.

Phillip A. Walen
Senior Geophysicist
CA Registration No. GP917

Sand Canyon Tank -- Line 1



Crafton Hills Tank -- Line 2



Figure 1

Sand Canyon Tank

MASW Model: Vs verses Depth -- Line 1

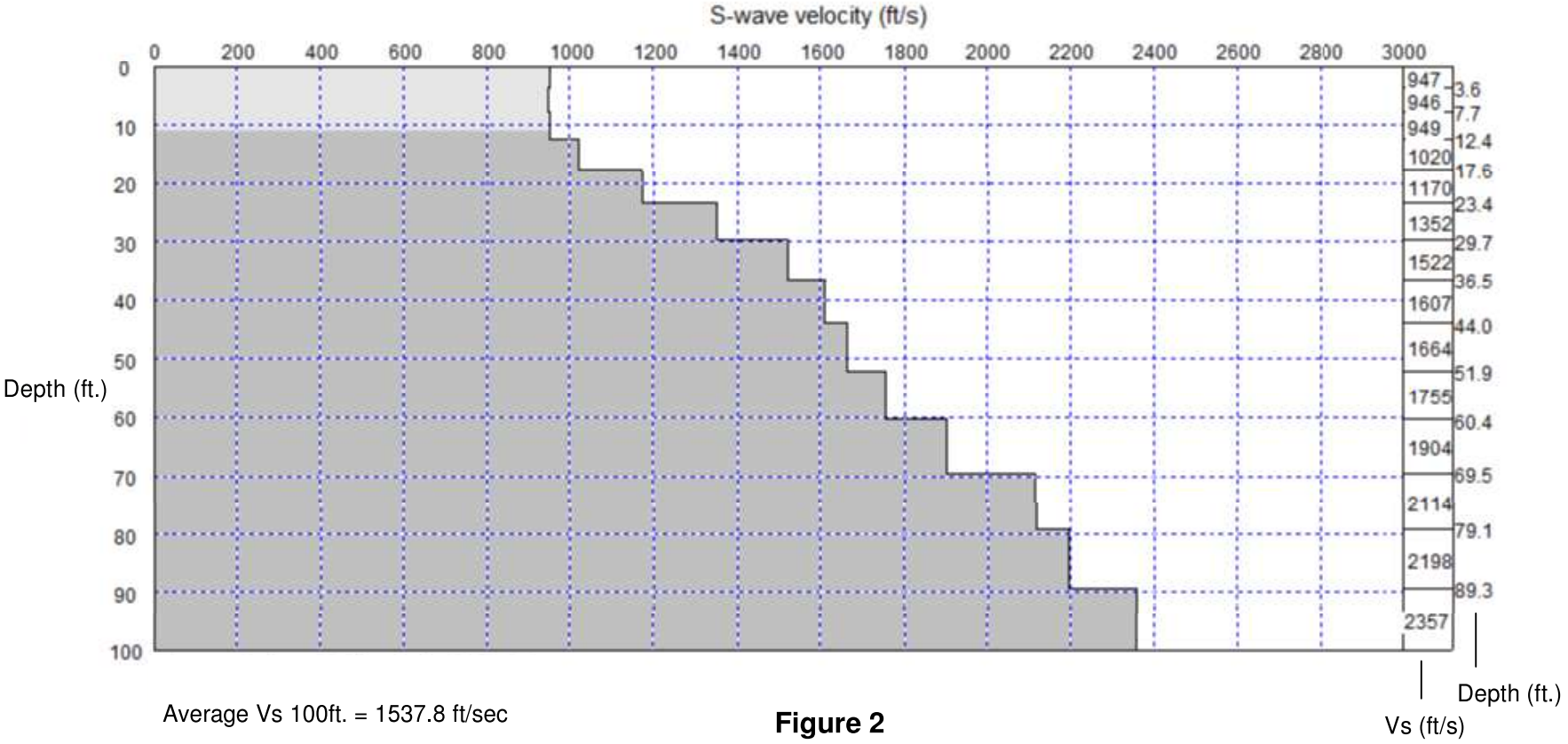

Average Vs 100ft. = 1537.8 ft/sec

Figure 2

Crafton Hills Tank

MASW Model: Vs verses Depth -- Line 2

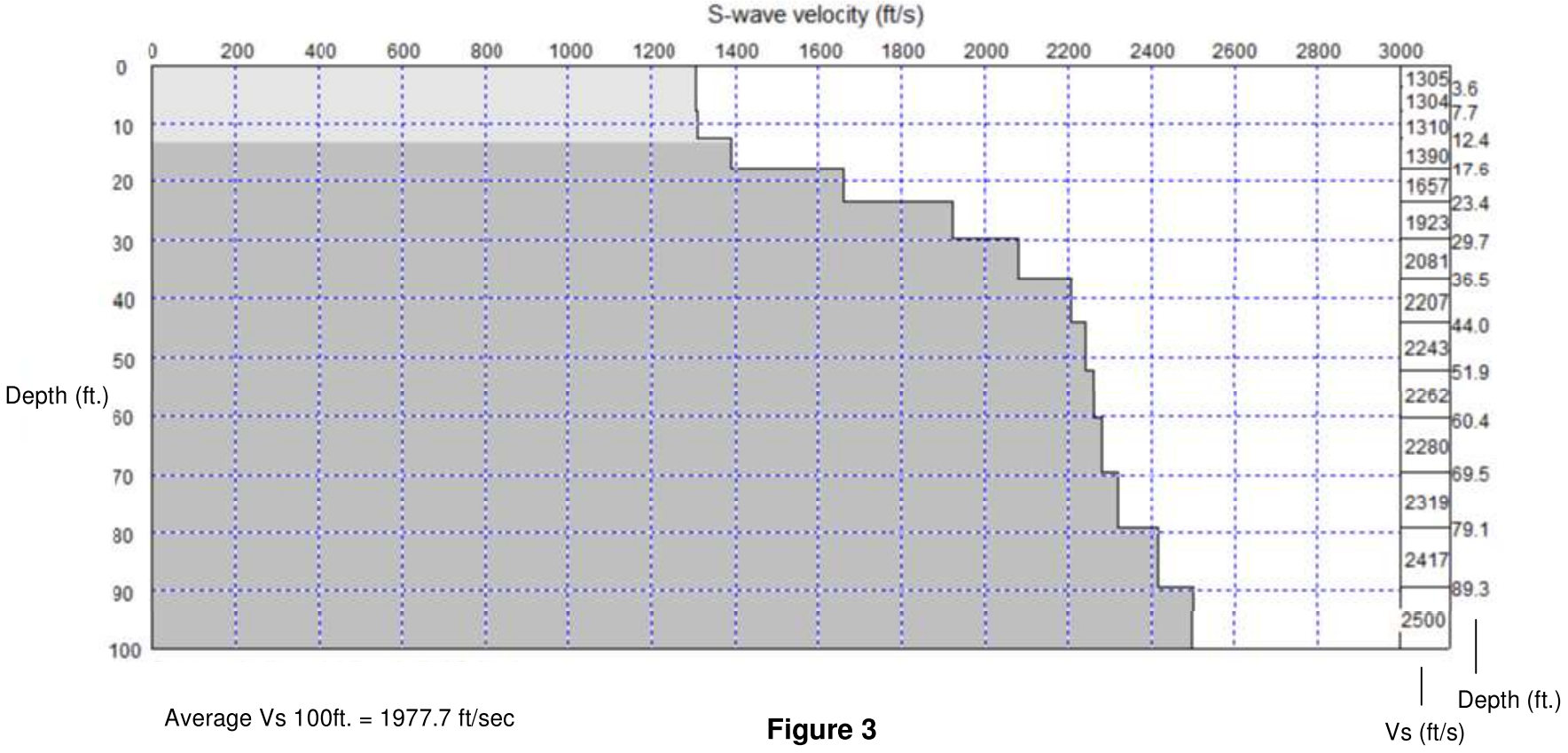

Average Vs 100ft. = 1977.7 ft/sec

Figure 3

Fifth Avenue Tank -- Line 3



Sunset Tank -- Line 4



Figure 4

Fifth Avenue Tank

MASW Model: Vs verses Depth -- Line 3

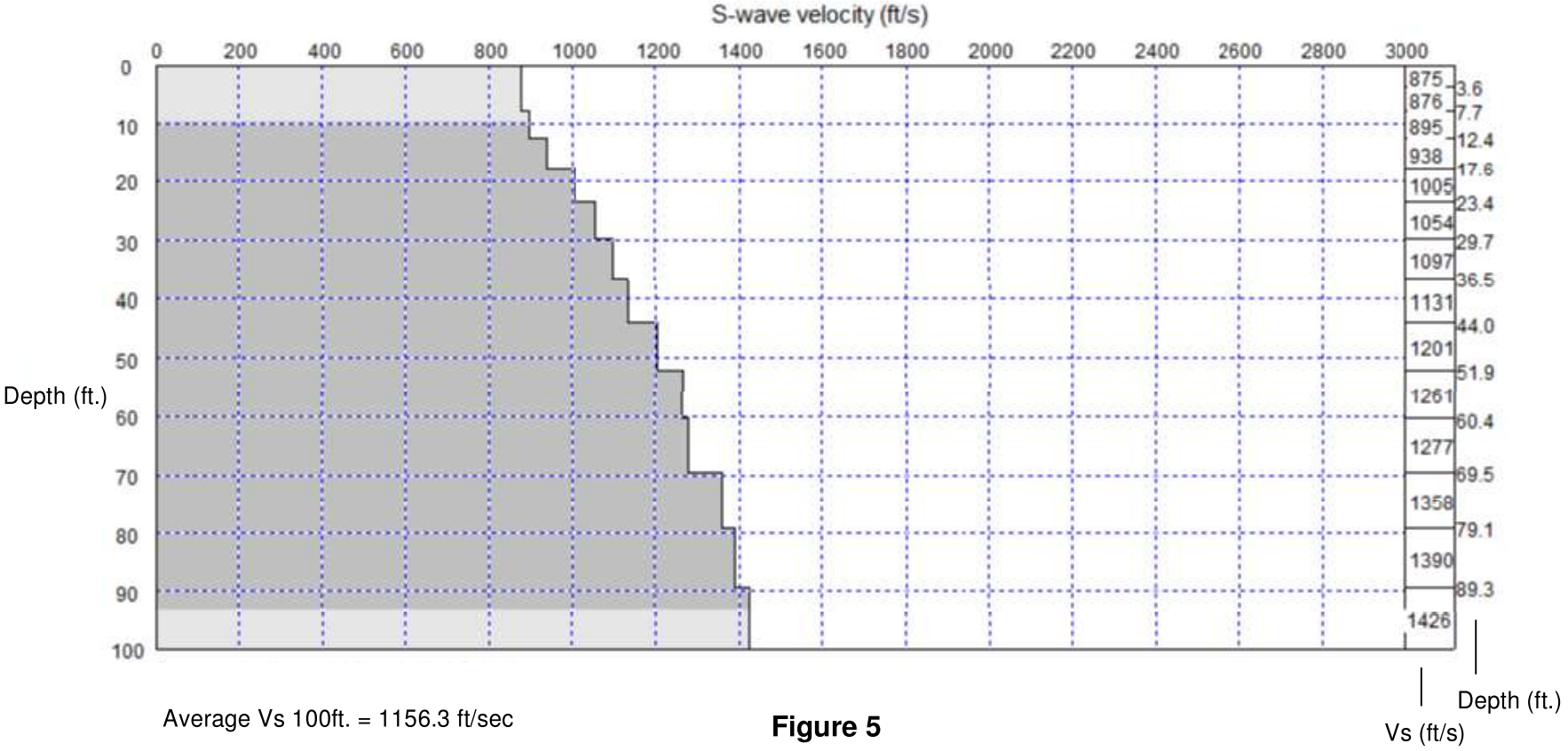

Average Vs 100ft. = 1156.3 ft/sec

Figure 5

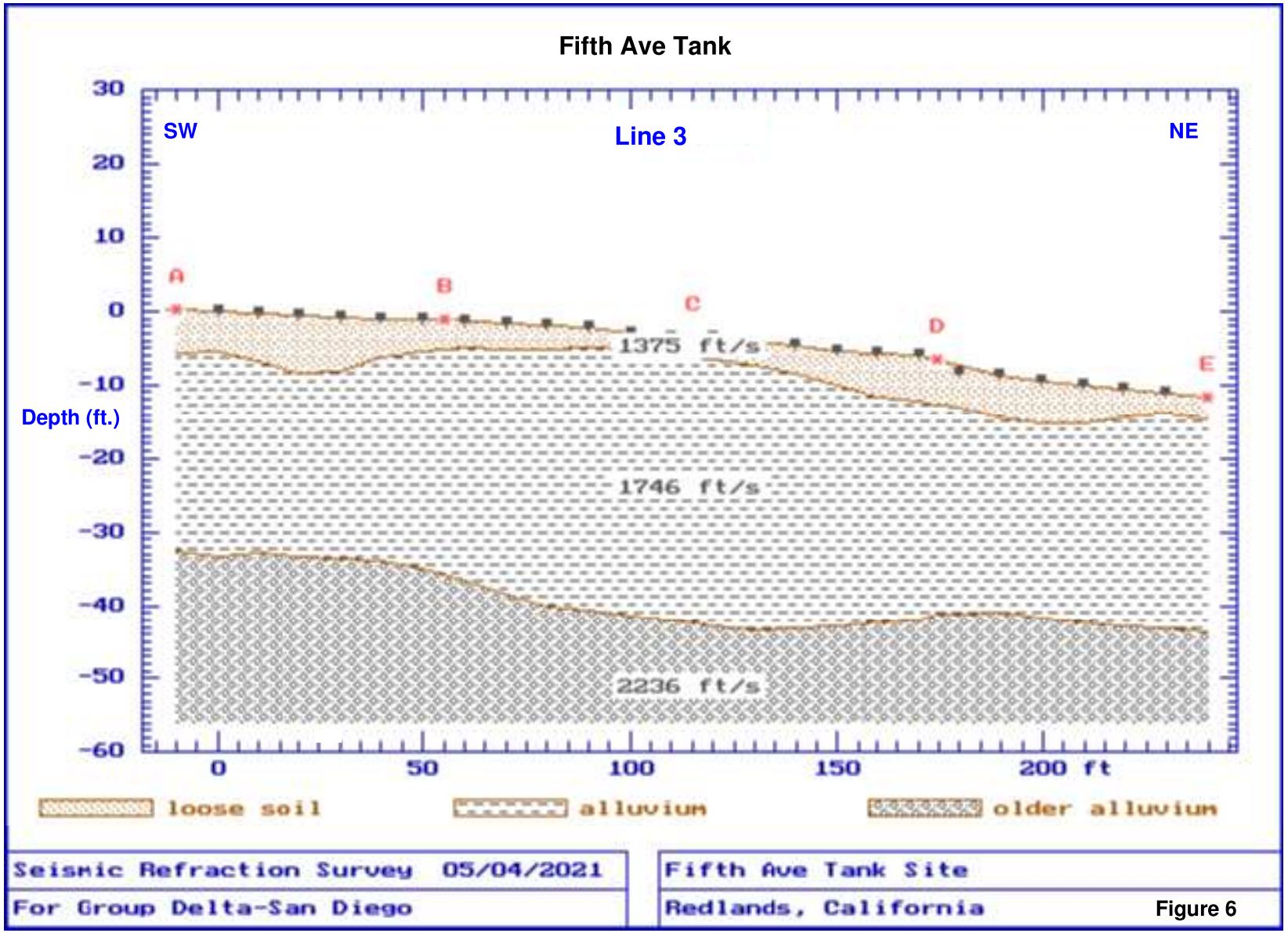
Fifth Ave Tank
SW
Line 3
NE
A
B
C
D
E
1375 ft/s
1746 ft/s
2236 ft/s
Depth (ft.)
30
20
10
0
-10
-20
-30
-40
-50
-60
0
50
100
150
200 ft
loose soil
alluvium
older alluvium
Seismic Refraction Survey 05/04/2021
For Group Delta-San Diego
Fifth Ave Tank Site
Redlands, California
Figure 6

Sunset Tank

MASW Model: Vs verses Depth -- Line 4

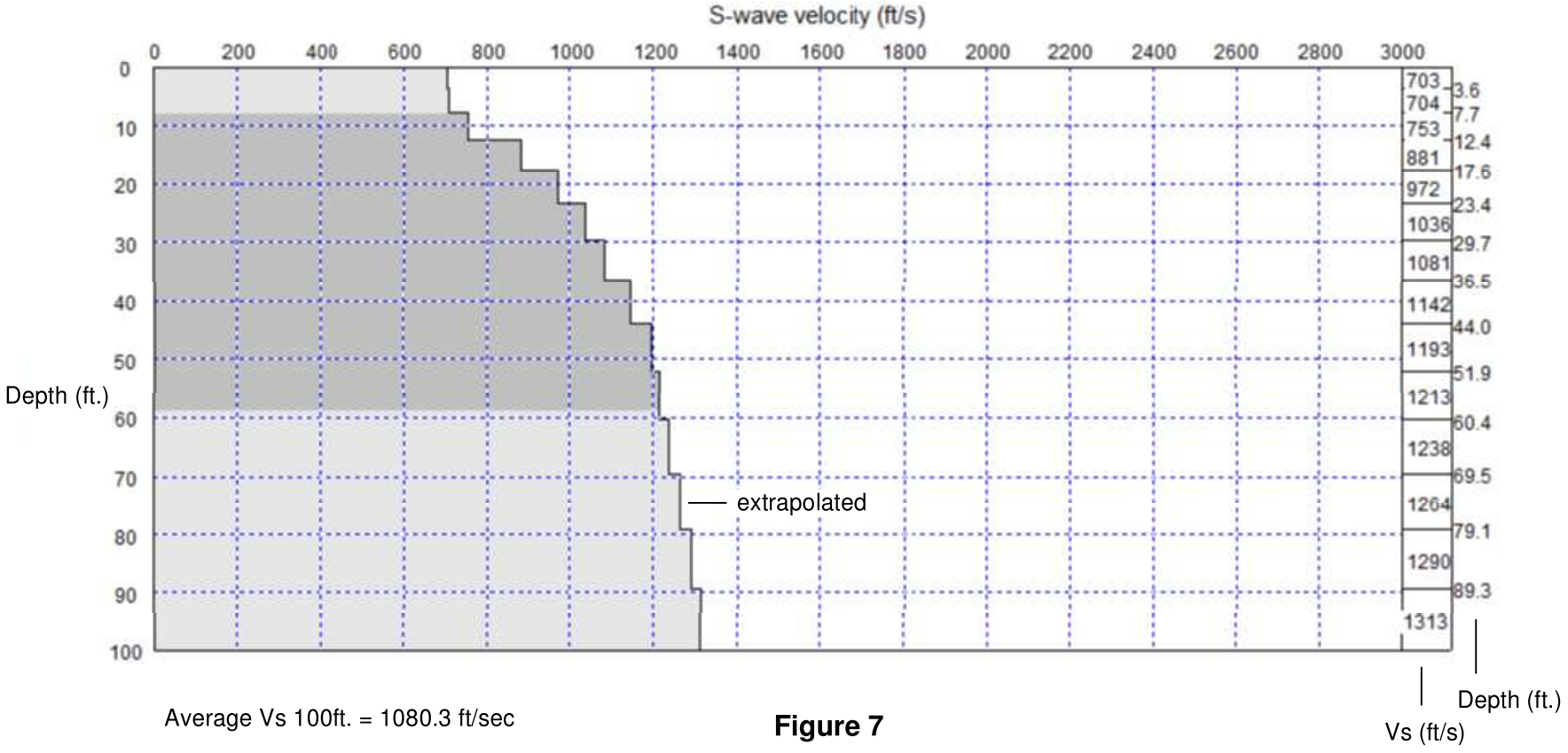

Average Vs 100ft. = 1080.3 ft/sec

Figure 7

Country Club Tanks -- Line 5



Margarita Tank -- Line 6



Figure 8

Country Club Tanks

MASW Model: Vs verses Depth -- Line 5

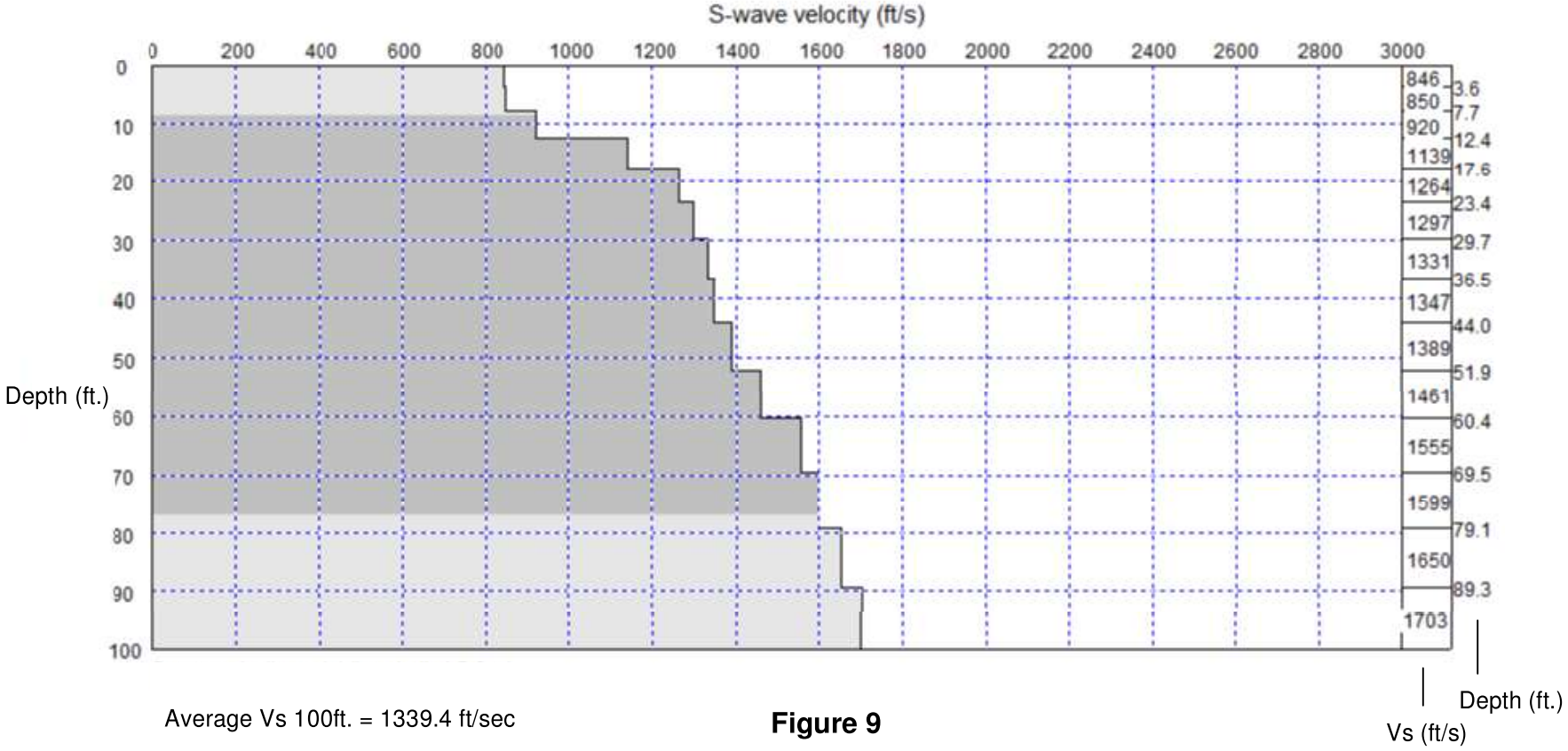

Average Vs 100ft. = 1339.4 ft/sec

Figure 9

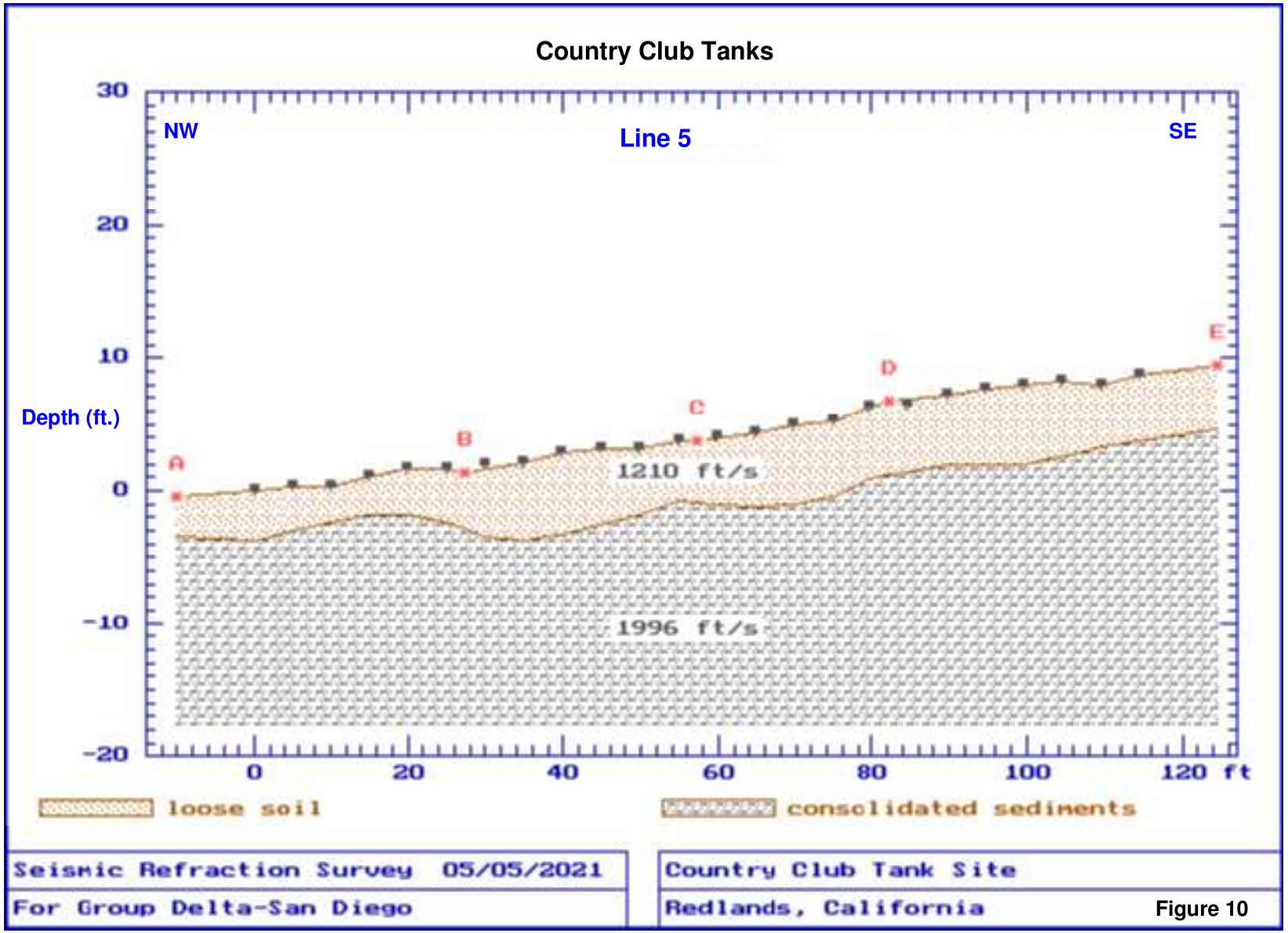
Country Club Tanks
Line 5
NW
SE
Depth (ft.)
30
20
10
0
-10
-20
0
20
40
60
80
100
120 ft
A
B
C
D
E
1210 ft/s
1996 ft/s
loose soil
consolidated sediments
Seismic Refraction Survey 05/05/2021
For Group Delta-San Diego
Country Club Tank Site
Redlands, California

Figure 10

Margarita Tank

MASW Model: Vs verses Depth -- Line 6

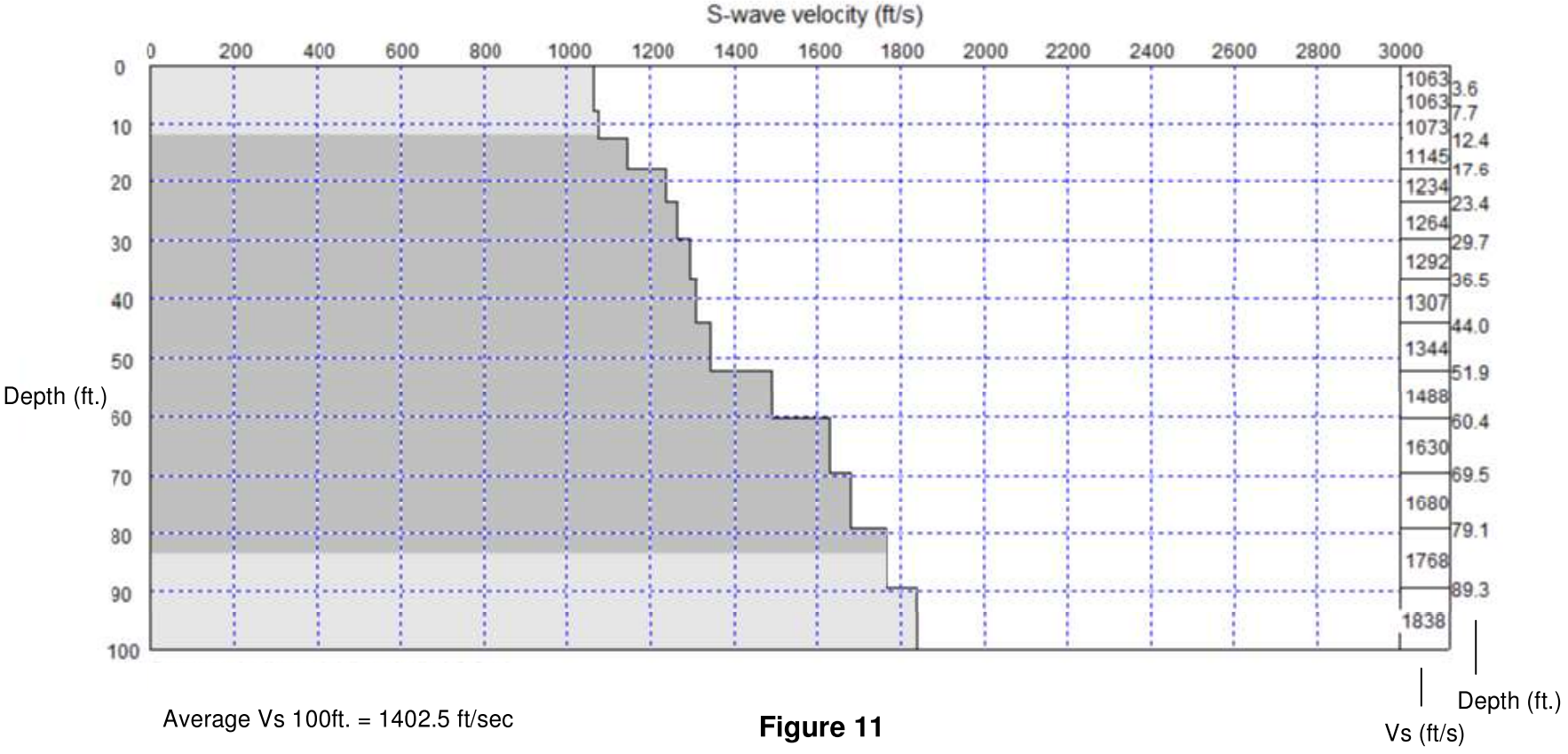

Average Vs 100ft. = 1402.5 ft/sec

Figure 11

Smiley Tank -- Line 7



Dearborn Tank -- Line 8



Figure 12

Smiley Tank

MASW Model: Vs verses Depth -- Line 7

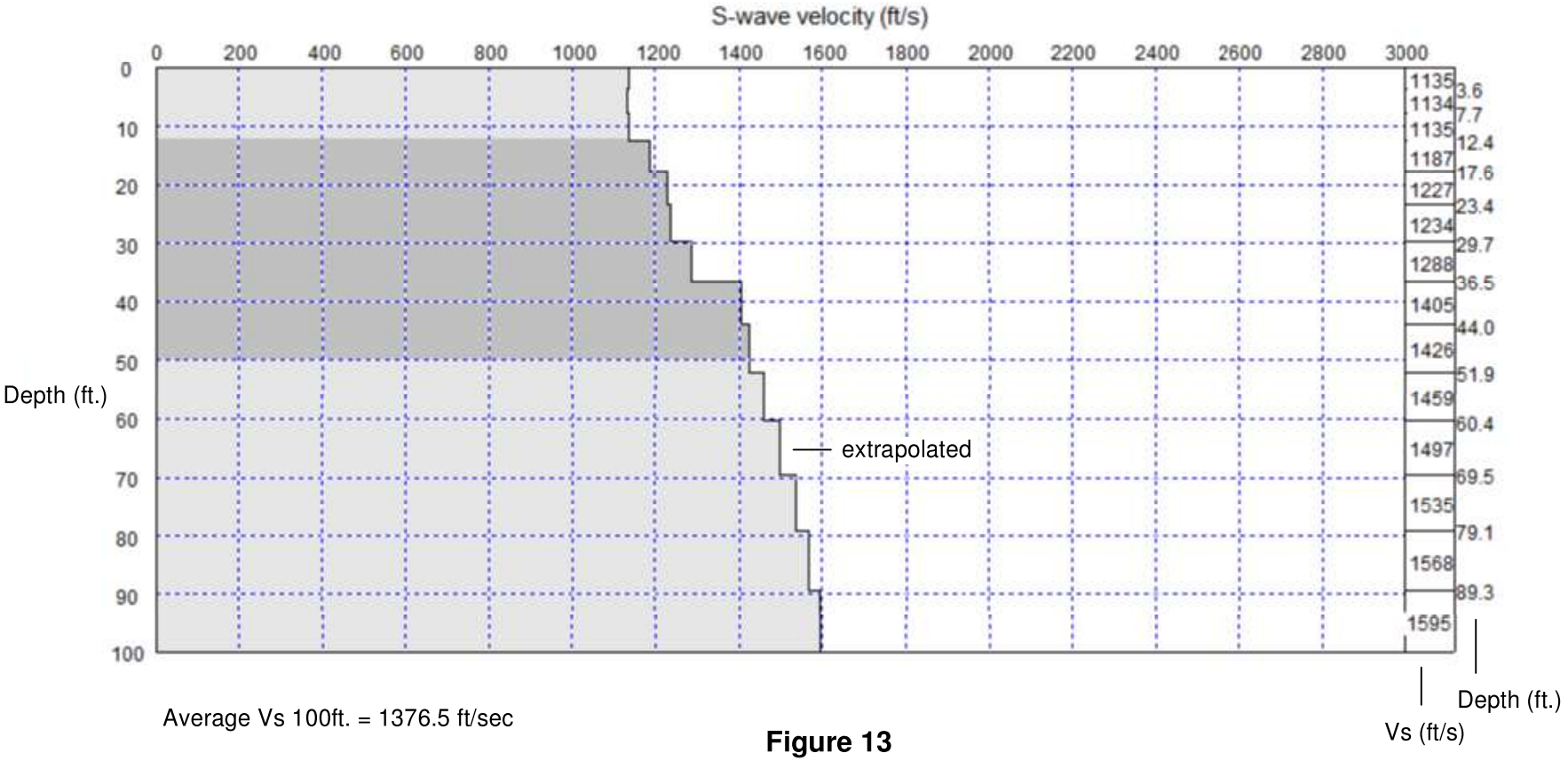

Average Vs 100ft. = 1376.5 ft/sec

Figure 13

Dearborn Tank

MASW Model: Vs verses Depth -- Line 8

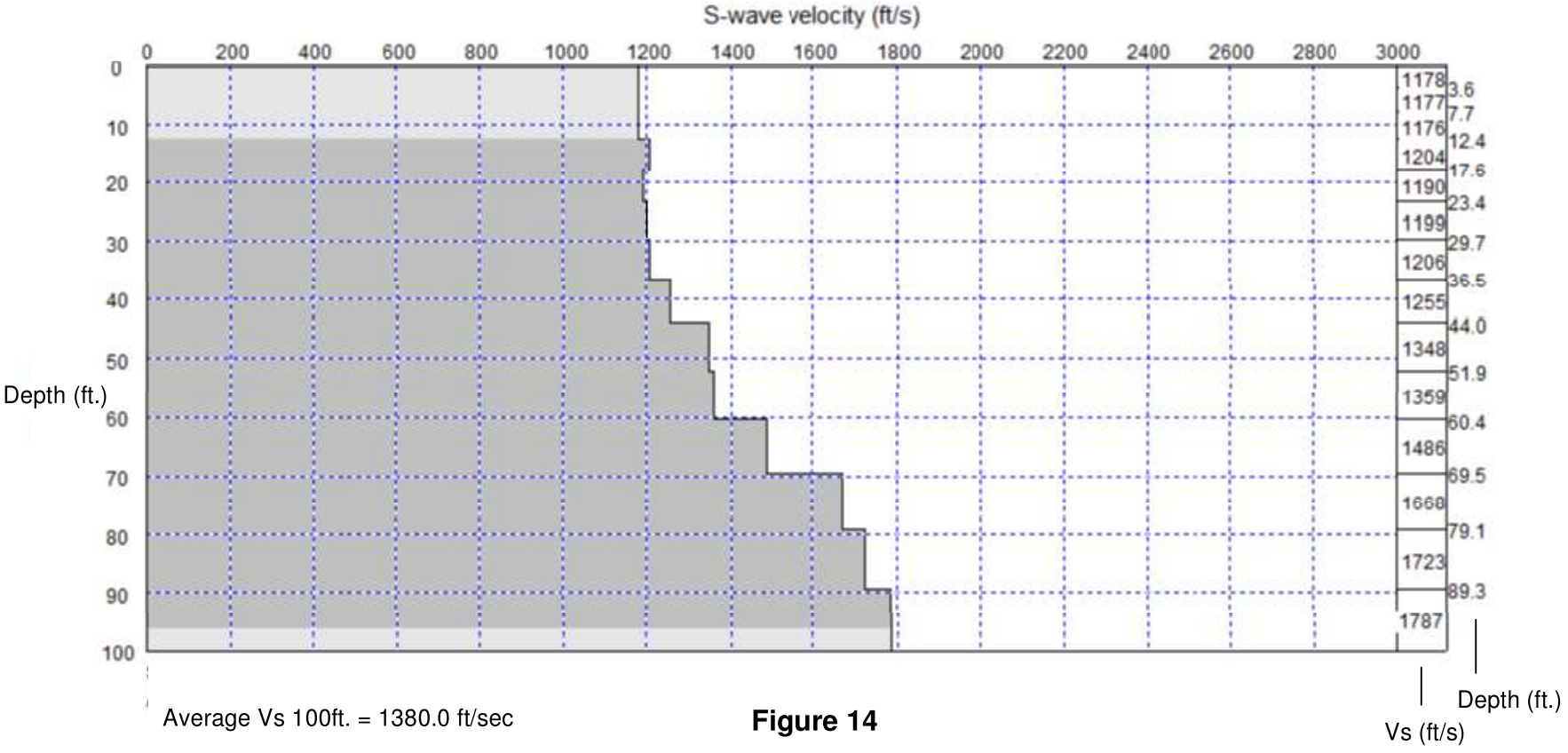

Average Vs 100ft. = 1380.0 ft/sec

Figure 14

Arroyo Tank -- Line 9

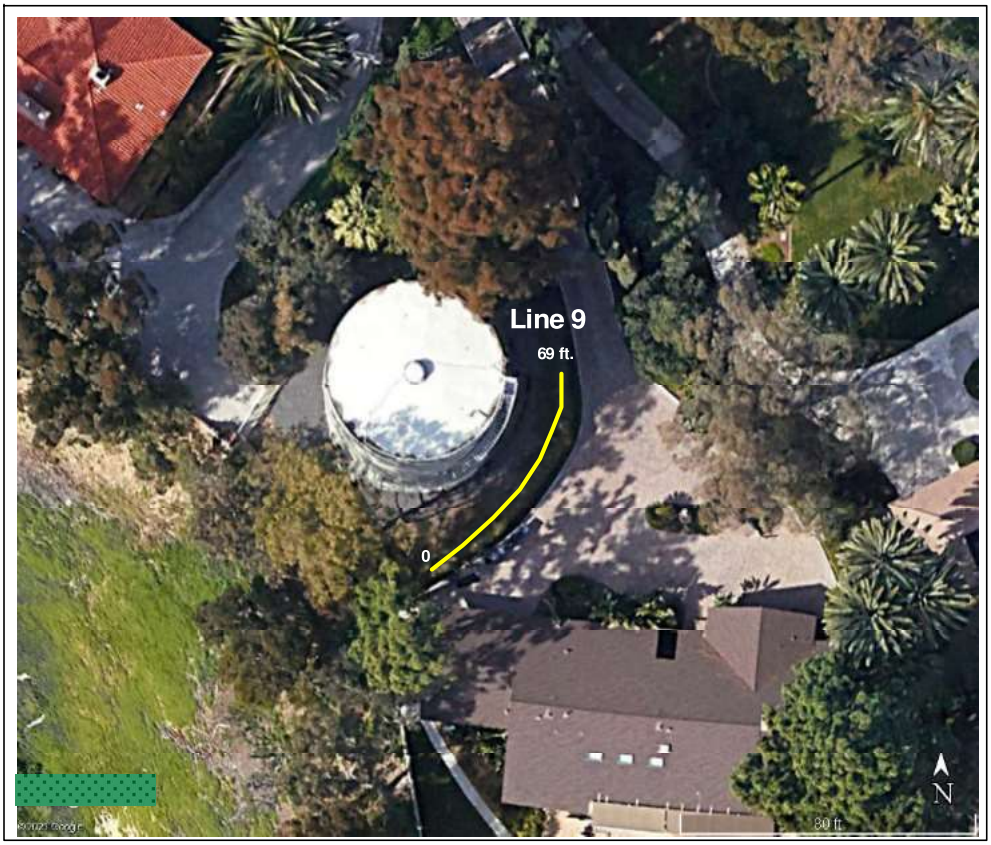

Mill Creek Tanks -- Line 10



Figure 15

Arroyo Tank

MASW Model: Vs verses Depth -- Line 9

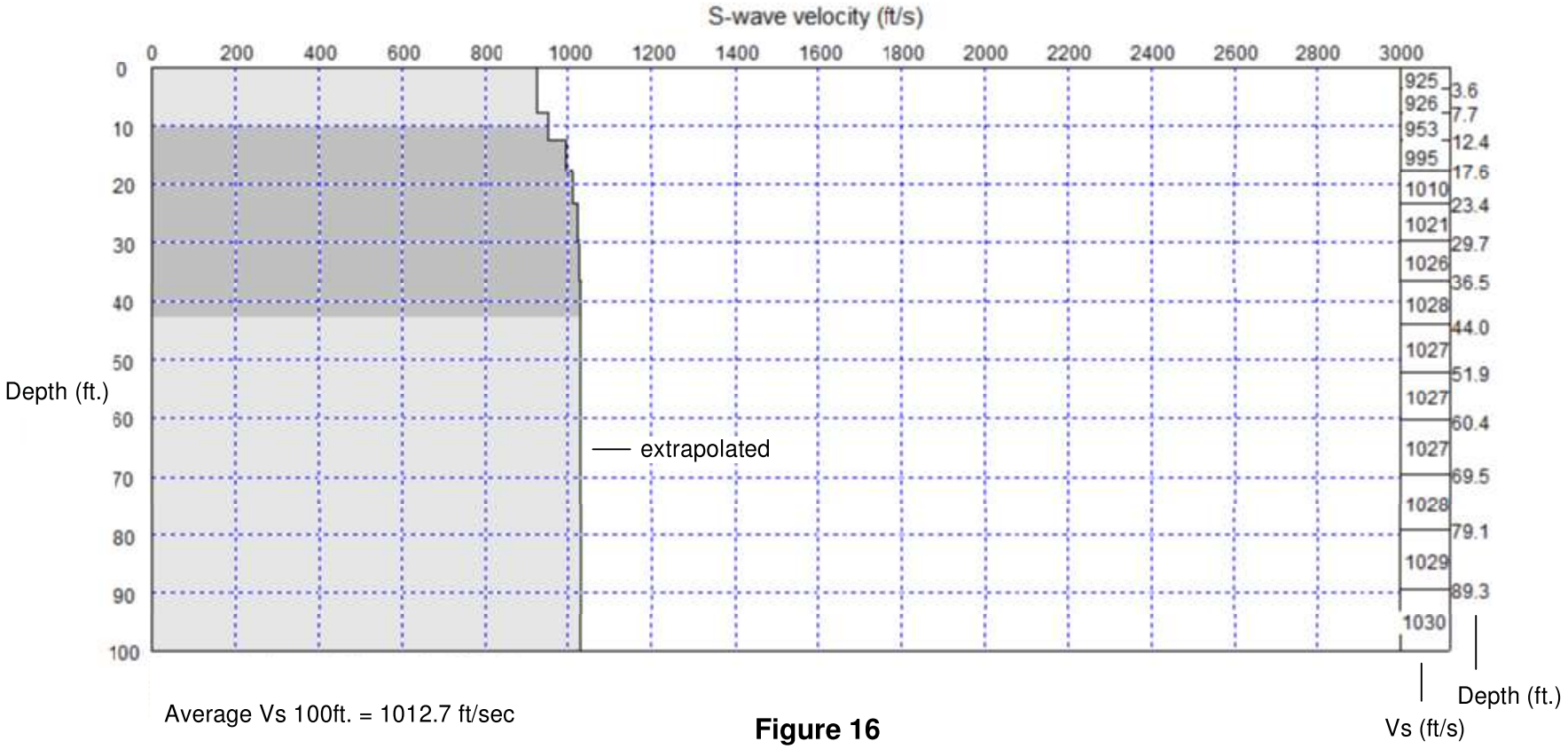

Average Vs 100ft. = 1012.7 ft/sec

Figure 16

Arroyo Tank Site

Seismic Tomography Model -- Line 9

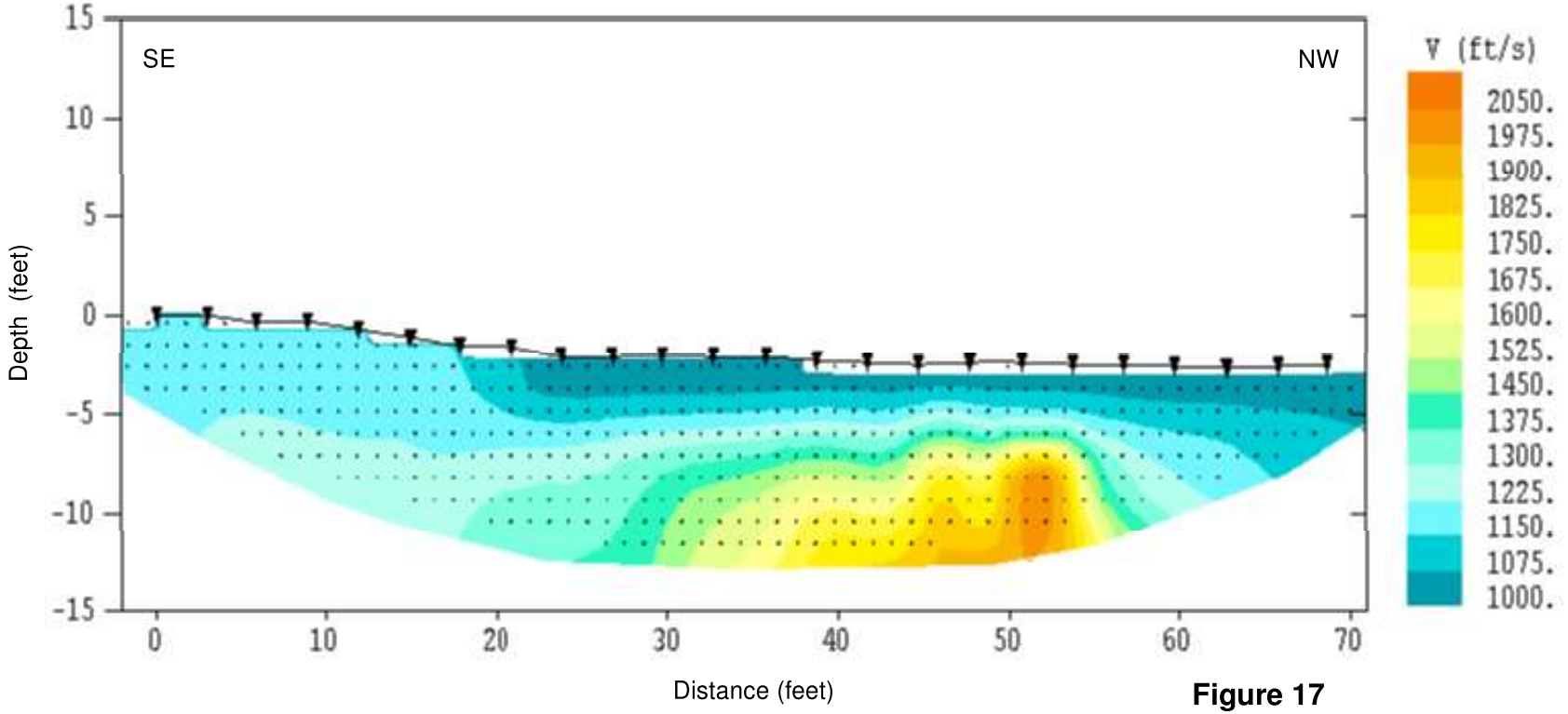

Figure 17

Mill Creek Tanks

MASW Model: Vs verses Depth -- Line 10

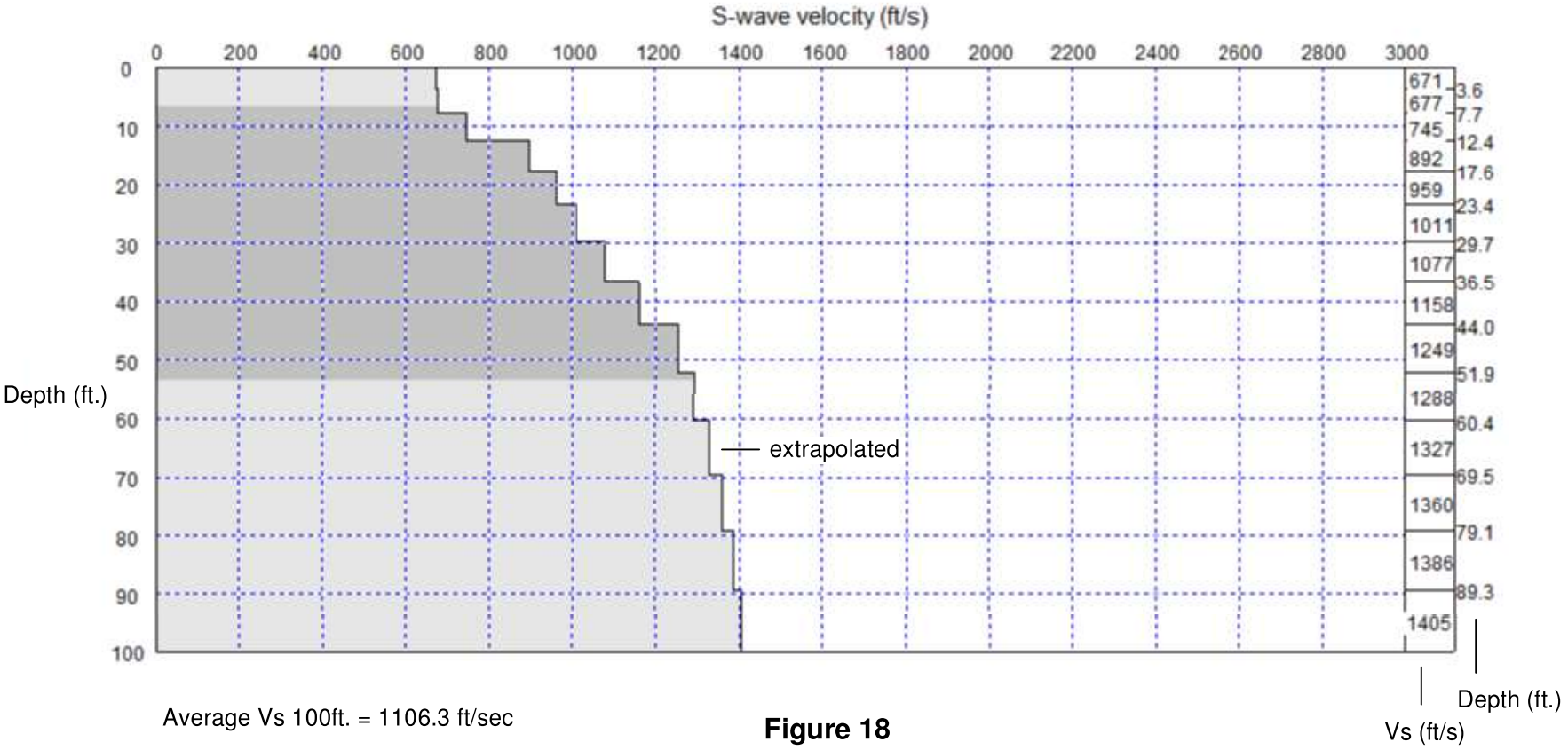

Average Vs 100ft. = 1106.3 ft/sec

Figure 18

Ward Tank -- Line 11



Agate Tank -- Line 12



Figure 19

Ward Tank

MASW Model: Vs verses Depth -- Line 11

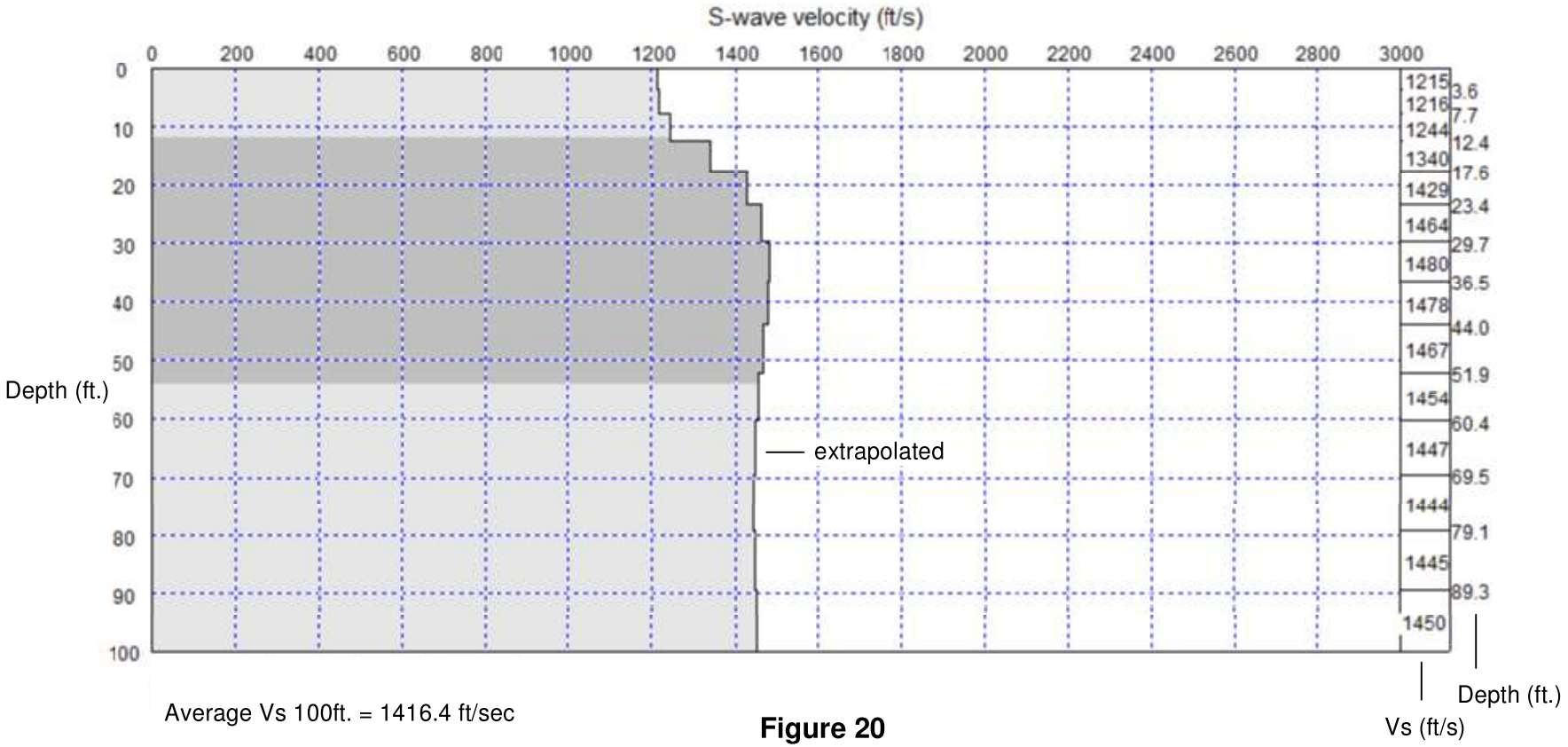

Average Vs 100ft. = 1416.4 ft/sec

Figure 20

Agate Tank

MASW Model: Vs verses Depth -- Line 12

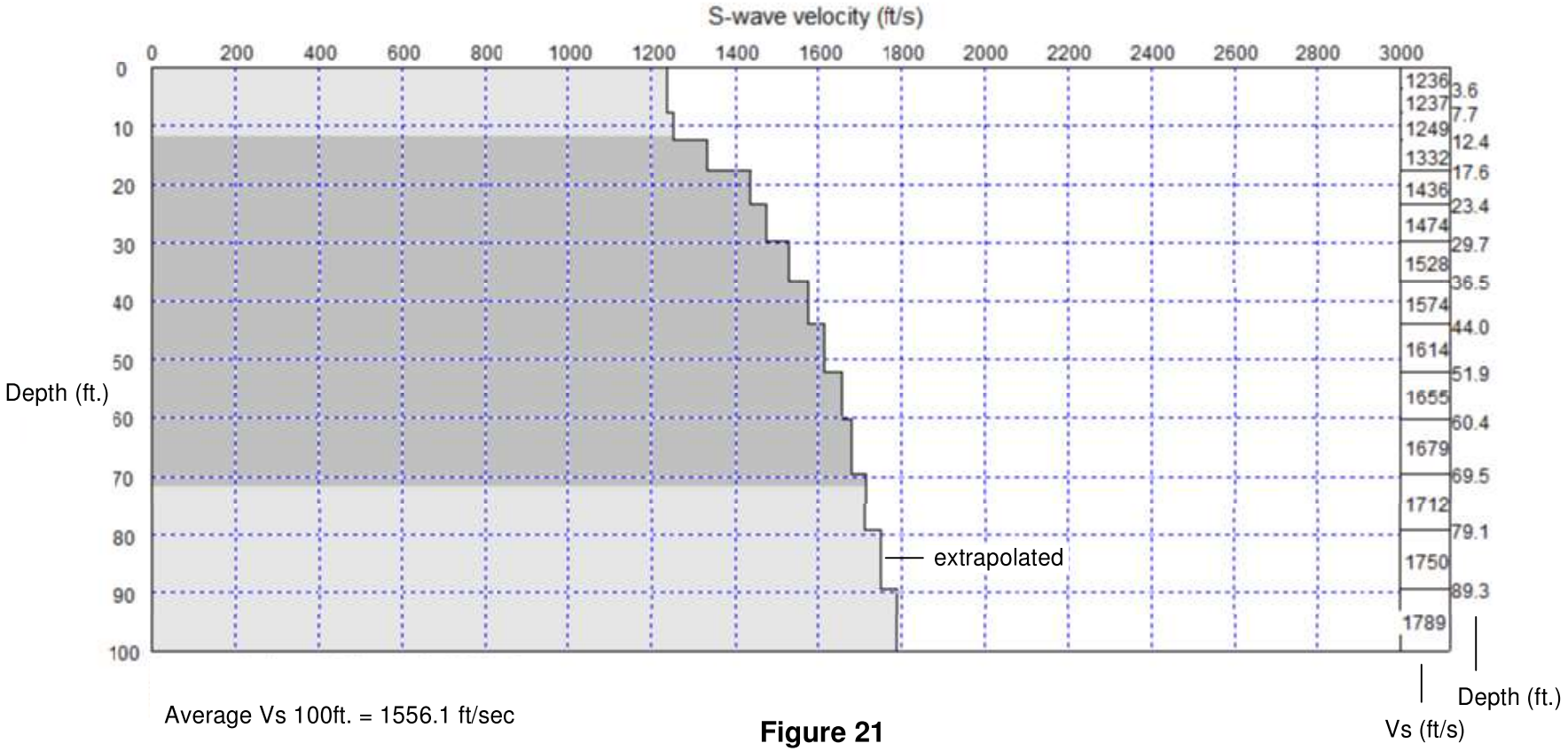

Average Vs 100ft. = 1556.1 ft/sec

Figure 21

APPENDIX C
LABORATORY TESTING

APPENDIX C

LABORATORY TESTING

Laboratory testing was conducted in a manner consistent with the level of care and skill ordinarily exercised by members of the profession currently practicing under similar conditions and in the same locality. No warranty, express or implied, is made as to the correctness or serviceability of the test results, or the conclusions derived from these tests. Where a specific laboratory test method has been referenced, the reference only applies to the specified method which has been used as a guidance document for the general performance of the test and not a "Test Standard". A brief description of the various tests follows.

Classification: Soils were classified using laboratory testing according to the Unified Soil Classification System as established by the American Society of Civil Engineers per ASTM D2487.

Particle Size Analysis: Particle size analyses were performed on the recombined soil sample in general accordance with ASTM D7928, and were used to determine USCS soil classifications. The test results are shown in Figures C-1.1 through C-1.8.

Atterberg Limits: ASTM D4318 was used to determine the Liquid Limit, Plastic Limit, and Plasticity Index (PI) of a few selected soil samples. Test results were generally non-plastic and are reported in Figures C-1.1 through C-1.8, as appropriate.

Expansion Index: The expansion potentials of selected soil samples were estimated using ASTM D4829. The test results are summarized in Figure C-2, along with common criteria for evaluating expansion potential based on the Expansion Index.

pH and Resistivity: To assess the potential for reactivity with buried metals, a selected soil sample was tested for pH and minimum resistivity using Caltrans test method 643. The corrosivity test results are summarized in Figure C-3.

Sulfate Content: To assess the potential for reactivity with concrete, a selected soil sample was tested for water soluble sulfate. The sulfate was extracted from the soil under vacuum using a 10:1 (water to dry soil) dilution ratio. The extracted solution was tested for water soluble sulfate in general accordance with ASTM D516. The test results are also presented in Figure C-3, along with common criteria for evaluating soluble sulfate content.

Chloride Content: The solute described above was also tested for water soluble chloride. The extracted solution was then tested for water soluble chloride using a calibrated ion specific electronic probe. The test results are also shown in Figure C-3.

EXPANSION TEST RESULTS
(ASTM D4829)

SAMPLE	DESCRIPTION	EXPANSION INDEX
HA-15 @ 0-1' (Mill Creek 1 & 2)	Silty sand with gravel (SM)	11

EXPANSION INDEX	POTENTIAL EXPANSION
0 to 20	Very low
21 to 50	Low
51 to 90	Medium
91 to 130	High
Above 130	Very High

CORROSIVITY TEST RESULTS
(ASTM D516, CTM 643)

SAMPLE	pH	RESISTIVITY [OHM-CM]	SULFATE CONTENT [%]	CHLORIDE CONTENT [%]
HA-3 @ 0' – 4' (Texas Street)	7.65	15,233	< 0.01	< 0.01
HA-4 @ 0' – 3' (South)	6.71	4,064	< 0.01	< 0.01
HA-6 @ 0' – 3' (Dearborn)	7.03	10,416	< 0.01	< 0.01
HA-7 @ 0' – 5' (Highland)	7.71	2,404	< 0.01	< 0.01
HA-9 @ 0' – 1' (Crafton Hills)	**3.90**	**465**	**0.17**	**0.13**
HA-10 @ 0' – 3' (Fifth Avenue)	6.64	5,007	< 0.01	< 0.01
HA-11 @ 0' – 2' (Sunset)	6.36	6,544	< 0.01	< 0.01
HA-12 @ 0' – 3' (Country Club 1 & 2)	7.58	2,667	0.01	< 0.01
HA-13 @ 0' – 3'(Smiley)	7.26	4,020	< 0.01	< 0.01
HA-14 @ 0' – 3' (Arroyo)	7.66	2,393	< 0.01	< 0.01
HA-15 @ 0' – 1' (Mill Creek 1 & 2)	6.90	3,915	< 0.01	< 0.01
Hinkley Pipeline Pothole #1	7.24	25,715	< 0.01	< 0.01
Hinkley Pipeline Pothole #2	7.12	25,660	< 0.01	< 0.01

SULFATE CONTENT [%]	SULFATE EXPOSURE	CEMENT TYPE
0.00 to 0.10	Negligible	-
0.10 to 0.20	Moderate	II, IP(MS), IS(MS)
0.20 to 2.00	Severe	V
Above 2.00	Very Severe	V plus pozzolan

SOIL RESISTIVITY [OHM-CM]	GENERAL DEGREE OF CORROSIVITY TO FERROUS METALS
0 to 1,000	Very Corrosive
1,000 to 2,000	Corrosive
2,000 to 5,000	Moderately Corrosive
5,000 to 10,000	Mildly Corrosive
Above 10,000	Slightly Corrosive

CHLORIDE (Cl) CONTENT [%]	GENERAL DEGREE OF CORROSIVITY TO METALS
0.00 to 0.03	Negligible
0.03 to 0.15	Corrosive
Above 0.15	Severely Corrosive

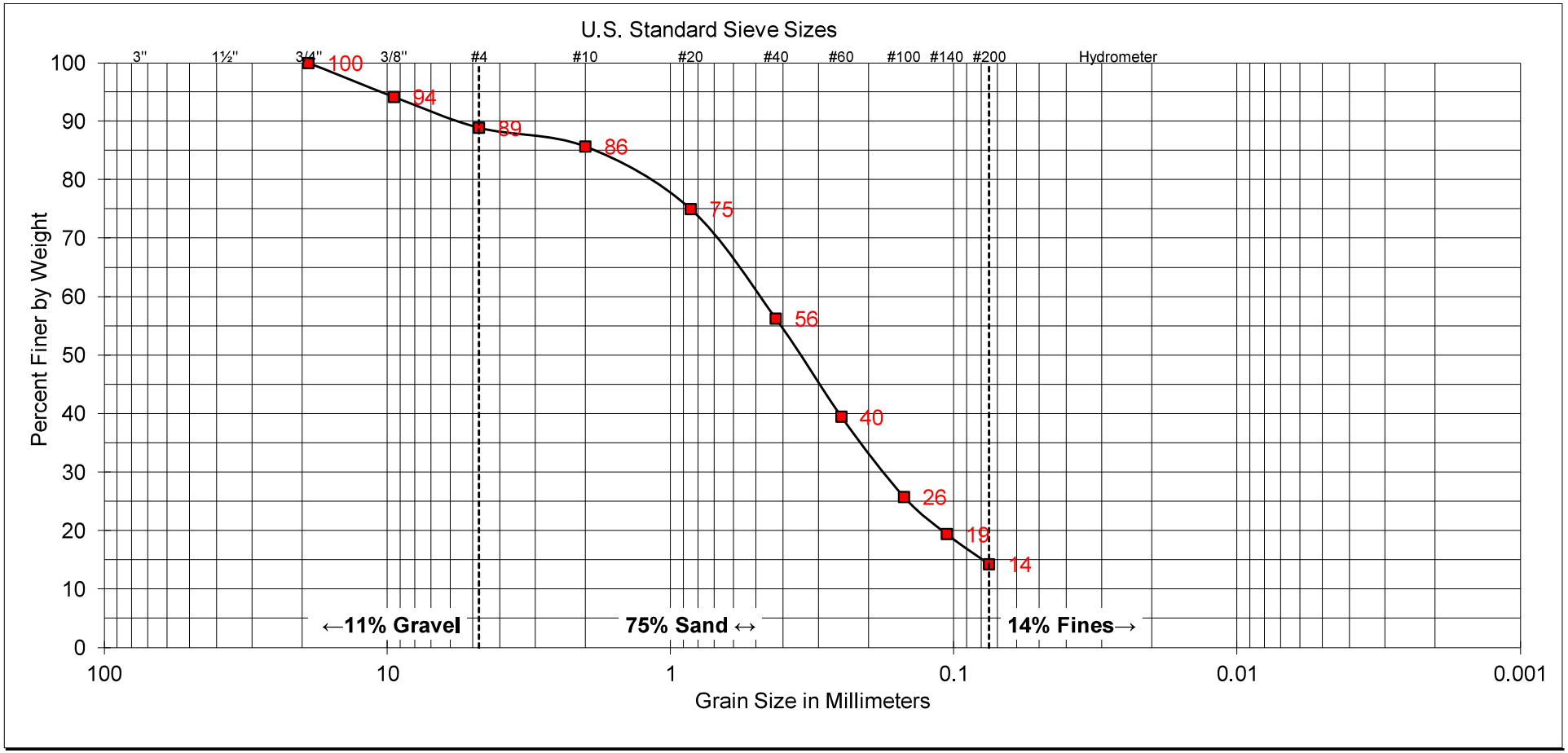

COARSE	FINE	COARSE	MEDIUM	FINE	SILT AND
GRAVEL		SAND			CLAY

SAMPLE
SAMPLE NUMBER: HA-3 (Texas Street)
SAMPLE DEPTH: Bulk (0' - 4')

UNIFIED SOIL CLASSIFICATION: SP-SM

DESCRIPTION: Poorly-Graded Sand with Silt

ATTERBERG LIMITS
LIQUID LIMIT: NP
PLASTIC LIMIT: NP
PLASTICITY INDEX: NP

GROUP DELTA

SOIL CLASSIFICATION

Project No. SD691

FIGURE C-1.1

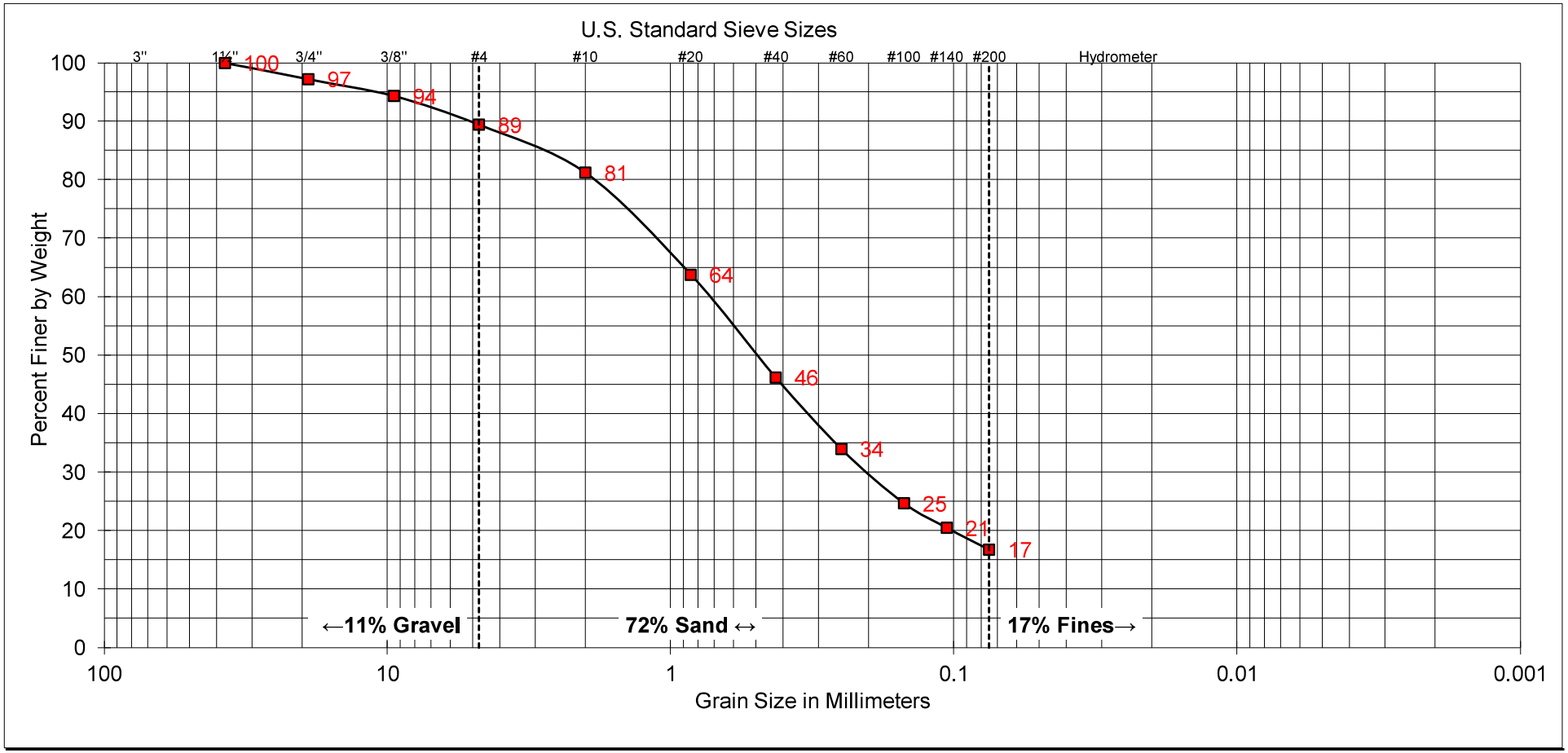

COARSE	FINE	COARSE	MEDIUM	FINE	SILT AND
GRAVEL		SAND			CLAY

SAMPLE
SAMPLE NUMBER: HA-4 (South)
SAMPLE DEPTH: Bulk (0' - 3')

UNIFIED SOIL CLASSIFICATION: SM

DESCRIPTION: SILTY SAND

ATTERBERG LIMITS
LIQUID LIMIT: NP
PLASTIC LIMIT: NP
PLASTICITY INDEX: NP

GROUP DELTA

SOIL CLASSIFICATION

Project No. SD691

FIGURE C-1.2

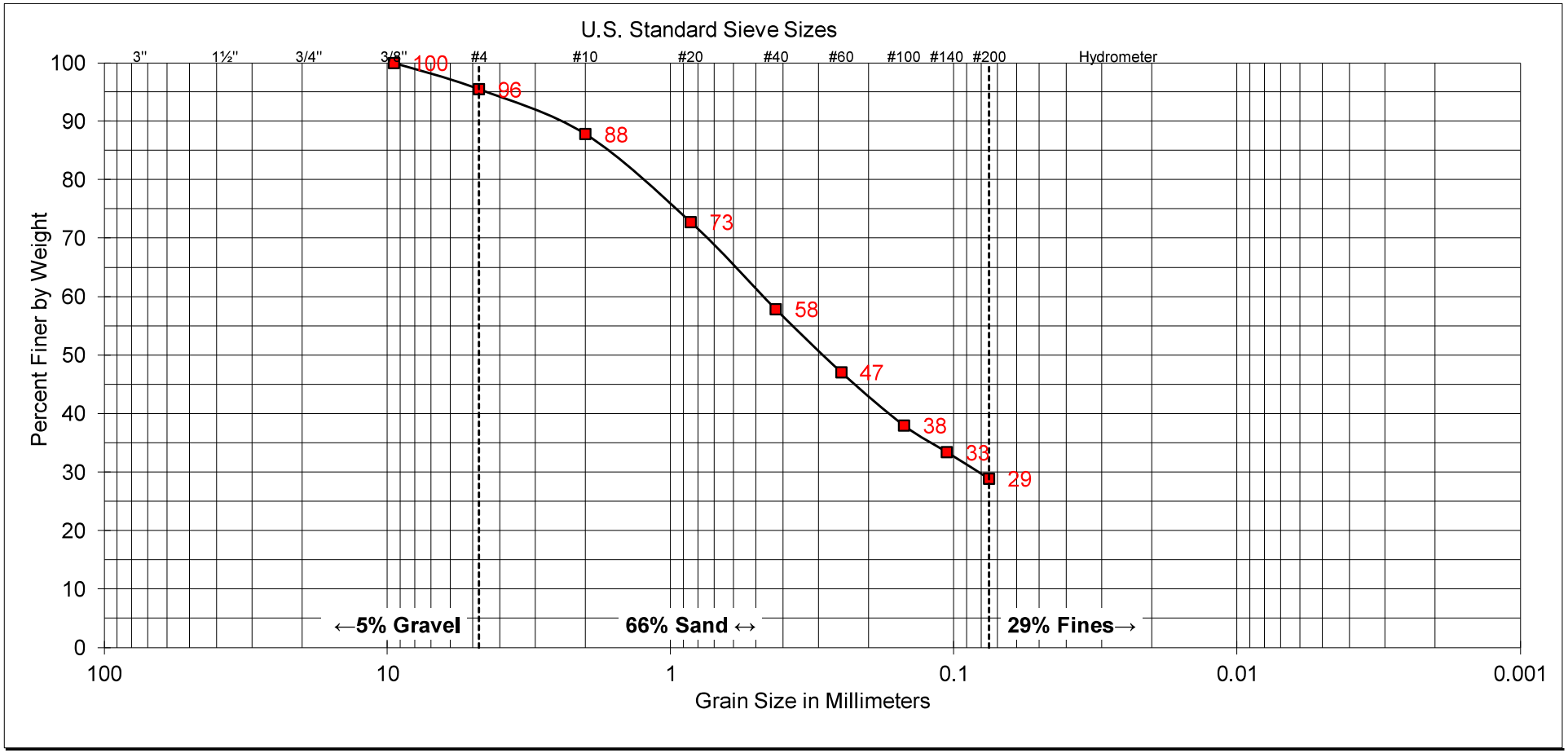

COARSE	FINE	COARSE	MEDIUM	FINE	SILT AND
GRAVEL		SAND			CLAY

SAMPLE
SAMPLE NUMBER: HA-7 (Highland)
SAMPLE DEPTH: Bulk (0' - 5')

UNIFIED SOIL CLASSIFICATION: SM

DESCRIPTION: SILTY SAND

ATTERBERG LIMITS	
LIQUID LIMIT:	--
PLASTIC LIMIT:	--
PLASTICITY INDEX:	--

GROUP DELTA

SOIL CLASSIFICATION

Project No. SD691

FIGURE C-1.3

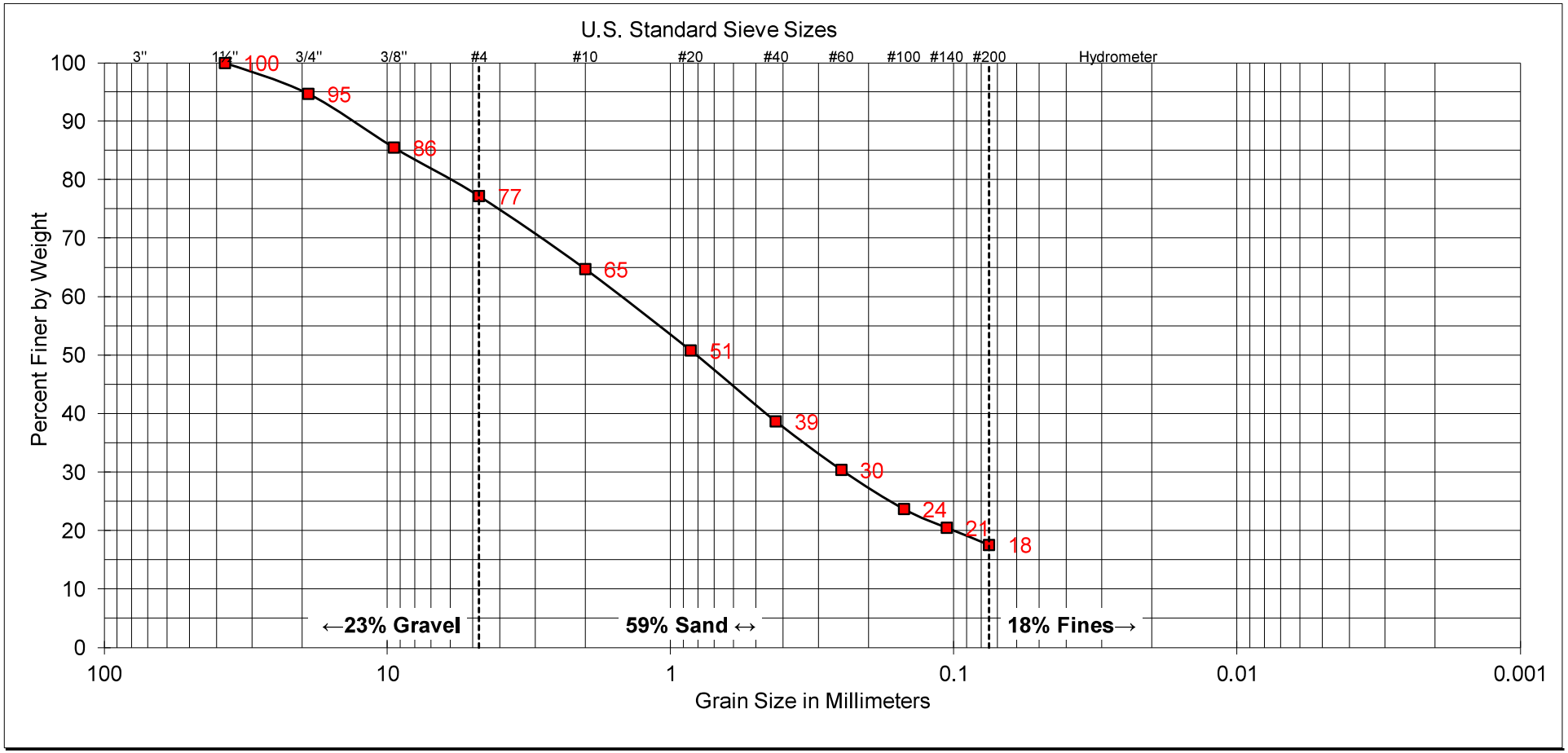

COARSE	FINE	COARSE	MEDIUM	FINE	SILT AND
GRAVEL		SAND			CLAY

SAMPLE
SAMPLE NUMBER: HA-9 (Sand Canyon)
SAMPLE DEPTH: Bulk

UNIFIED SOIL CLASSIFICATION: SM

DESCRIPTION: Silty Sand with Gravel

ATTERBERG LIMITS	
LIQUID LIMIT:	--
PLASTIC LIMIT:	--
PLASTICITY INDEX:	--

GROUP DELTA

SOIL CLASSIFICATION

Project No. SD691

FIGURE C-1.4

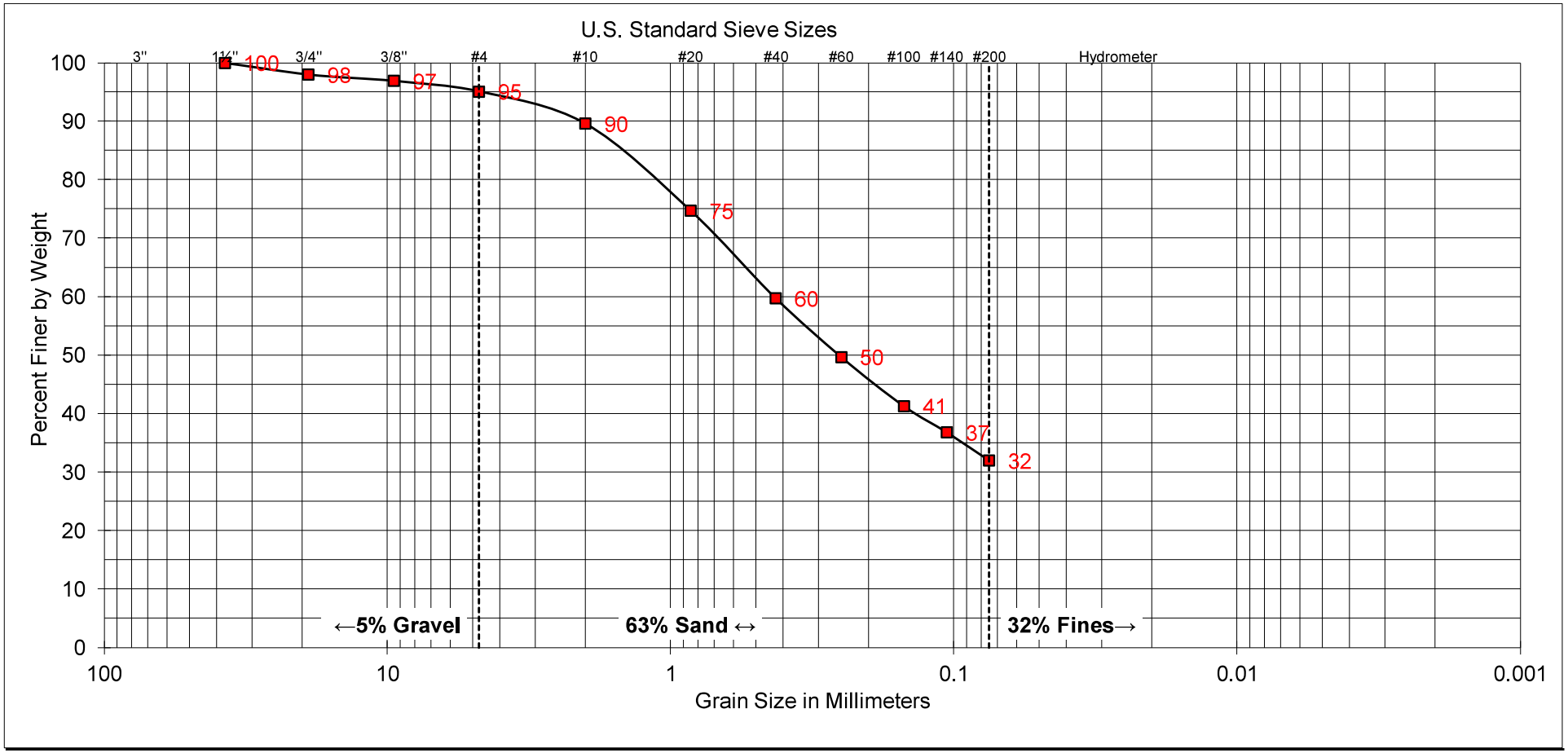

COARSE	FINE	COARSE	MEDIUM	FINE	SILT AND
GRAVEL		SAND			CLAY

SAMPLE
SAMPLE NUMBER: HA-10 (Fifth Avenue)
SAMPLE DEPTH: Bulk (0' - 3')

UNIFIED SOIL CLASSIFICATION: SM

DESCRIPTION: Silty Sand

ATTERBERG LIMITS	
LIQUID LIMIT:	--
PLASTIC LIMIT:	--
PLASTICITY INDEX:	--

GROUP DELTA

SOIL CLASSIFICATION

Project No. SD691

FIGURE C-1.5

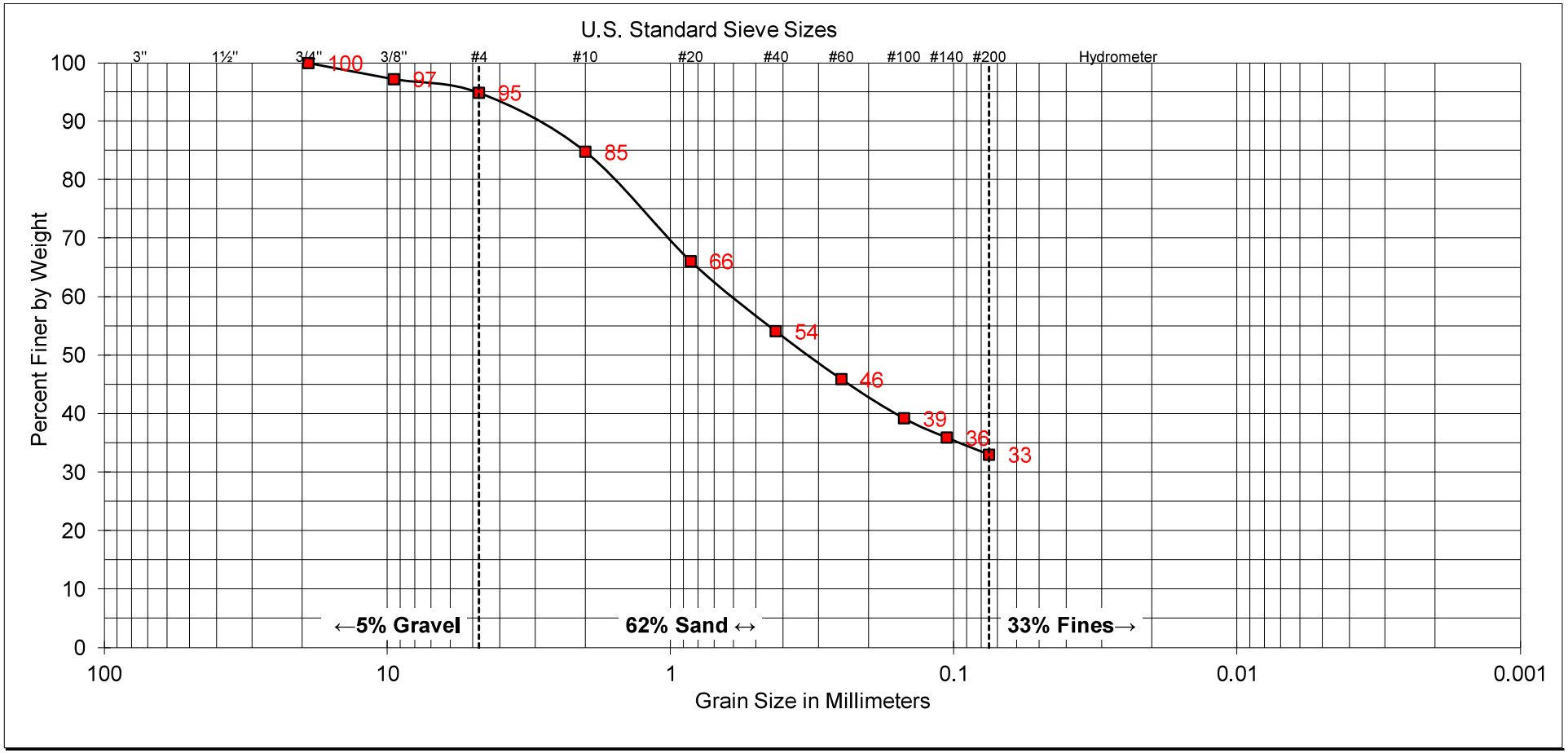

COARSE	FINE	COARSE	MEDIUM	FINE	SILT AND
GRAVEL		SAND			CLAY

SAMPLE
SAMPLE NUMBER: HA-11 (Sunset)
SAMPLE DEPTH: Bulk (0' -2')

UNIFIED SOIL CLASSIFICATION: SM

DESCRIPTION: SM

ATTERBERG LIMITS	
LIQUID LIMIT:	--
PLASTIC LIMIT:	--
PLASTICITY INDEX:	--

GROUP DELTA

SOIL CLASSIFICATION

Project No. SD691

FIGURE C-1.6

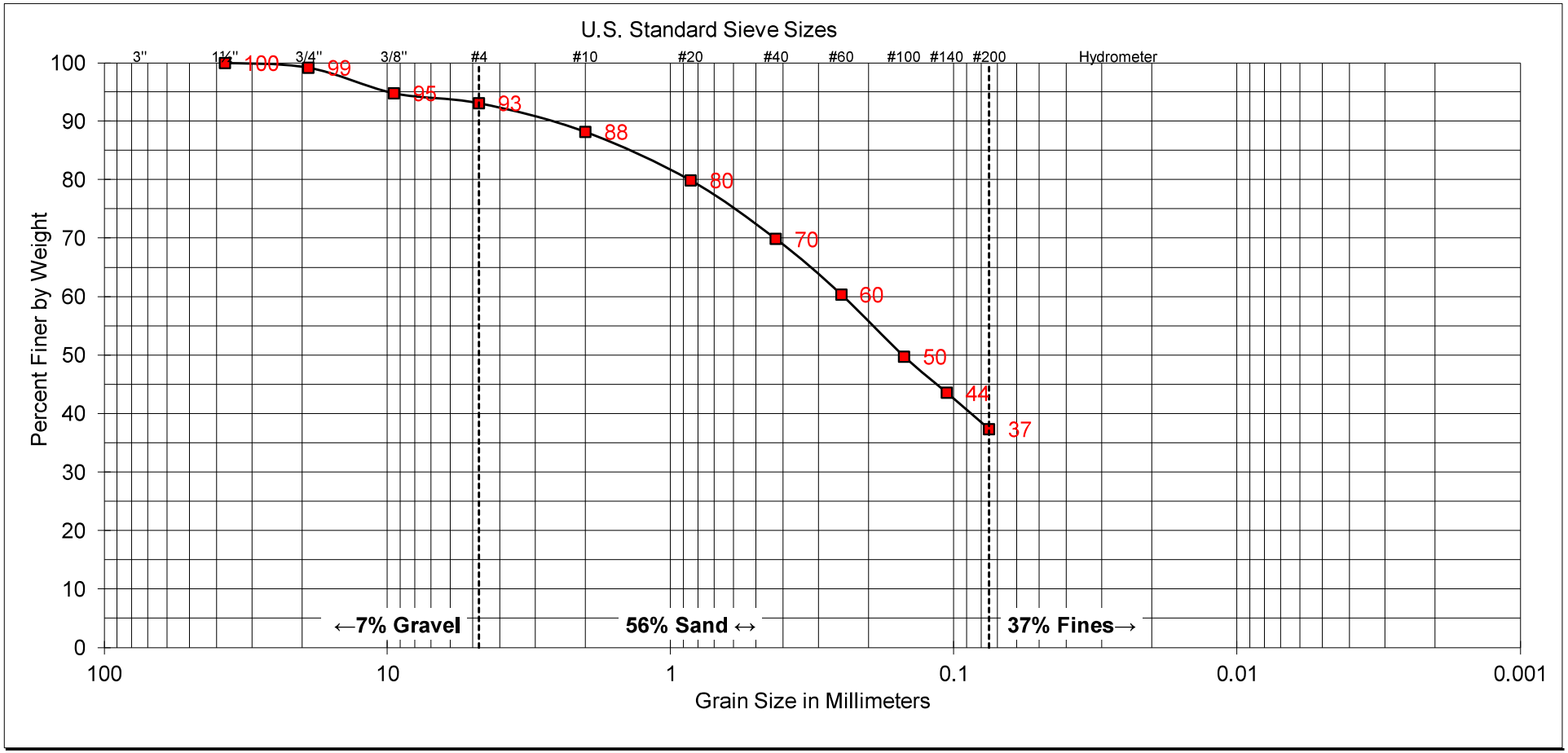

COARSE	FINE	COARSE	MEDIUM	FINE	SILT AND
GRAVEL		SAND			CLAY

SAMPLE
SAMPLE NUMBER: HA-14 (Arroyo)
SAMPLE DEPTH: Bulk (0' - 3')

UNIFIED SOIL CLASSIFICATION: SM

DESCRIPTION: SILTY SAND

ATTERBERG LIMITS	
LIQUID LIMIT:	--
PLASTIC LIMIT:	--
PLASTICITY INDEX:	--

GROUP DELTA

SOIL CLASSIFICATION

Project No. SD691

FIGURE C-1.7

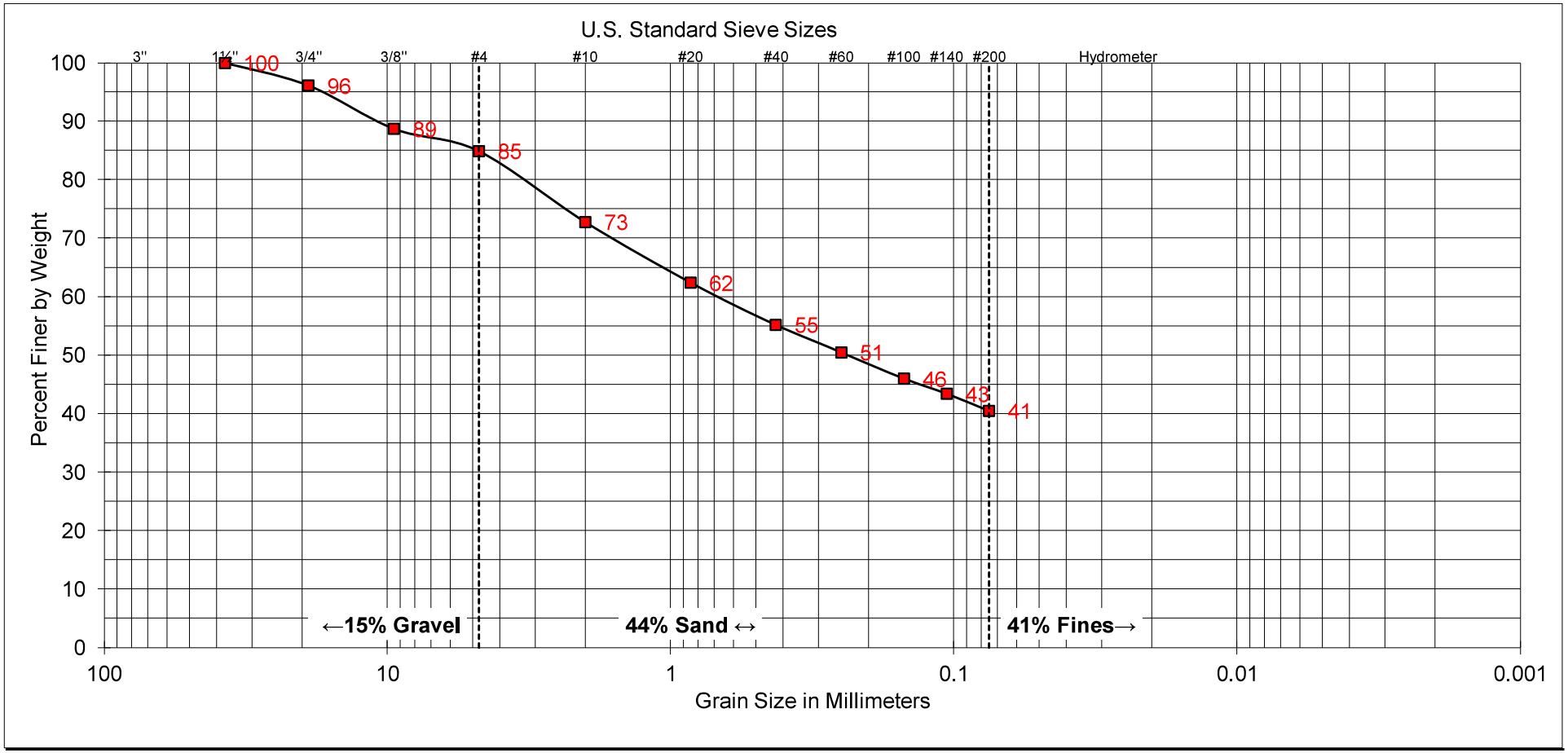

COARSE	FINE	COARSE	MEDIUM	FINE	SILT AND
GRAVEL		SAND			CLAY

SAMPLE
SAMPLE NUMBER: HA-15 (Mill Creek 1 & 2)
SAMPLE DEPTH: Bulk (0' - 1')

UNIFIED SOIL CLASSIFICATION: SM

DESCRIPTION: Silty Sand with Gravel

ATTERBERG LIMITS	
LIQUID LIMIT:	NP
PLASTIC LIMIT:	NP
PLASTICITY INDEX:	NP

GROUP DELTA

SOIL CLASSIFICATION

Project No. SD691

FIGURE C-1.8

APPENDIX D
SITE-SPECIFIC SEISMIC HAZARD EVALUATION

SITE-SPECIFIC SEISMIC HAZARD EVALUATION

D.1 INTRODUCTION

This section presents the results of the site-specific seismic hazard analyses performed in accordance with the 2019 California Building Code (CBC) and ASCE 7-16 (ASCE/SEI 7-16) for the subject project. Based on discussions with the City of Redlands, we have also considered the recent changes to seismic design proposed by the 2020 National Earthquake Hazard Reduction Program (NEHRP) guidelines*, NEHRP Recommended Seismic Provisions for New Buildings and Other Structures (2020).* These guidelines are generally the precursor to the next edition of ASCE 7 (ASCE 7-22) and have been reviewed for this project to evaluate potential changes for ground motions in the upcoming years.

Horizontal Acceleration Response Spectra (ARS) for 5-percent damping were developed for the Risk-Targeted Maximum Considered Earthquake (MCE_R), as defined by ASCE 7-16, following Chapter 21.2, by performing both probabilistic and deterministic seismic hazard analyses. Site-specific probabilistic seismic hazard analyses were performed using the computer tool OpenSHA (Field, 2003), using the Uniform California Earthquake Rupture Forecast, Version 3 (UCERF3) seismic source model. Development of the horizontal ARS was also performed using the ground motion models developed as part of the Next Generation Attenuation (NGA) – West 2 research project.

D.2 SEISMIC SETTING

The reservoirs are located in the City of Redlands, which is an area with very high seismic activity. Table D-1 presents the coordinates of the sixteen reservoir sites used for our analyses. There are numerous faults in the site vicinity, including two of the most active faults in California, the San Andreas fault zone and the San Jacinto fault zone. These two fault zones consist of multiple fault segments and branches that have the potential for larger earthquakes when they rupture in combination. In addition to these two faults, faults that are part of the Crafton Hills fault zone are very close to many of the reservoirs.

Tables D-2 and D-3 list the active faults close to Redlands and the reservoir sites. A Regional Fault Map is shown in Figure D-1. Figures D-2 and D-3 present the nearby active faults adopted into the seismic source models used by the USGS to develop the U.S. National Seismic Hazard Maps (NSHM). Figure D-2 presents the active faults used by the 2014 NSHM (included in the current building codes) (Petersen et al., 2014), and Figure D-3 presents the provisional map for active faults that will be adopted into the 2023 NSHM. Note that the provisional mapping is under development and may be subject to change before its final publication at the end of 2023.

The maximum magnitudes and scenarios adopted for our analyses are consistent with the published Building Seismic Safety Council 2014 Event Set (the adopted deterministic ruptures used for the 2014 USGS NSHM (BSSC, 2015). For multi-segment faults, such as San Andreas, where different earthquake scenarios are considered, the one producing the largest magnitude was reported in the table along with its combined segments. A discussion of nearby faulting is included below.

The San Andreas fault zone is a right-lateral strike slip fault system that extends a total length of 1,200 kilometers (km) through California. This fault system forms the boundary between the Pacific Plate and the North American Plate. The Southern San Andreas section of the fault system extends from Parkfield down to its termination at the Salton Sea, with a length of 550 km. The Southern San Andreas section is estimated to be capable of producing earthquakes with a maximum magnitude of M_W = 8.2.

The San Jacinto fault zone is a right-lateral strike slip fault with a total length of about 210 km, extending from San Bernardino down to Superstition Mountain. At the northern end of the fault, it connects with the San Andreas fault zone. It is estimated to be capable of producing earthquakes with a maximum magnitude of M_W = 7.8 when all of the segments rupture in combination from San Bernardino to Superstition Mountain.

The Crafton Hills fault zone is between the San Andreas and the San Jacinto fault zones. It is an extensional fault zone comprising a series of normal oblique faults that have developed from movement of the two adjacent major faults. This fault system consists of a number of segments of smaller faults that are each about 10 km in length or less. Some segments of the Crafton Hills fault system have been considered active faults, while others have been (until recently) considered only “potentially active” due to limited available information.

Caltrans has previously considered the Crafton Hills fault active, with a maximum magnitude of M_W = 6.4. Currently, the USGS National Seismic Hazard Map (NSHM) program has not included this fault zone in their latest adopted seismic source model (2014) that is included in ASCE 7-16, as shown in Figure D-2. However, review of the available provisional fault map for the 2023 NSHM (Figure D-3) suggests that in the next edition, the USGS will be adopting two new faults into the seismic source model to represent the faulting in the Crafton Hills: the Reservoir Canyon fault and the Crafton Hills fault. This next edition will ultimately be incorporated into subsequent building code editions in the following years. To estimate the maximum magnitudes associated with the Reservoir Canyon and Crafton Hills fault zones, the preliminary fault geometry released by the USGS in support of the 2023 NSHM was used to estimate fault areas for each adopted trace. Several magnitude-area relationships were used to evaluate the likely maximum magnitudes, including Wells and Coppersmith (1994) and Hanks and Bakun (2008). The maximum magnitudes for Reservoir Canyon and Crafton Hills faults are estimated to be M_W = 6.4 and 6.5, respectively.

Southeast of Redlands is the San Gorgonio Pass fault zone, which is a 35 km long thrust fault that dips to the north. The fault is estimated to be capable of producing earthquakes with a maximum magnitude of M_W = 6.9.

Table D-1. Coordinates of the Evaluated Reservoirs

Reservoir	Latitude (º)	Longitude (º)
Agate Tank	34.0768	-117.125
Arroyo Tank	34.0285	-117.1923
Country Club Tanks	34.0209	-117.1386
Crafton Hills Tank	34.0448	-117.097
Dearborn Tank	34.0596	-117.1459
Fifth Avenue Tank	34.0461	-117.1243
Highland Avenue Tank	34.0429	-117.1591
Margarita Tank	34.0313	-117.1479
Mill Creek Tanks	34.0727	-117.0740
Sand Canyon Tank	34.0425	-117.1026
Smiley Tank	34.0309	-117.2004
South Tank	34.0349	-117.1526
Sunset Tank	34.0140	-117.1385
Texas Grove Tank	34.0791	-117.1885
Texas Street Tank	34.0722	-117.1920
Ward Way Tank	34.0722	-117.0947

Table D-2. Significant Active Faults Near the City of Redlands

Fault	Fault Type	Maximum Magnitude, M_W
Crafton Hills	Normal	6.5
Reservoir Canyon	Normal	6.4
San Andreas (Parkfield + Cholame + Carrizo + Big Bend + Northern Mojave + Southern Mojave + Northern San Bernardino + Southern San Bernardino + San Gorgonio Pass-Garnet Hill + Coachella)	Strike-Slip	8.2
San Gorgonio Pass	Reverse	6.9
San Jacinto (San Bernardino + San Jacinto Valley + Anza + Stepovers Combined + Coyote Creek + Borrego + Superstition Mountains)	Strike-Slip	7.8

Table D-3. Distance of Regional Active Faults to the Reservoirs

Reservoir	Site to Source Distance, R_{rup} (km)				
	Crafton Hills	Reservoir Canyon	San Andreas	San Gorgonio	San Jacinto
Agate	6.9	1.69	3.80	10.49	11.82
Arroyo	0.93	0.22	11.20	12.41	3.68
Country Club 1 & 2	1.30	1.84	9.95	7.55	6.4
Crafton Hills	2.50	1.84	5.95	6.66	11.00
Dearborn	5.60	1.79	6.32	10.40	9.13
Fifth Avenue	3.64	0.14	6.87	8.03	9.36
Highland	4.05	0.90	8.51	10.33	6.89
Margarita	2.61	0.43	9.29	8.83	6.70
Mill Creek 1& 2	4.00	2.13	2.29	8.51	14.66
Sand Canyon	2.70	1.63	6.42	6.56	10.46
Smiley	0.76	0.78	11.30	13.21	3.38
South	3.08	0.79	9.10	9.40	6.66
Sunset	0.56	2.53	10.64	7.23	5.85
Texas Grove	6.22	4.15	5.92	14.67	7.94
Texas Street	5.40	3.55	6.76	14.52	7.20
Ward Way	4.85	0.48	3.12	8.89	13.33

D.3 SITE CHARACTERIZATION

In developing site-specific ground motions, the characteristics of the soils underlying the site are an important input to evaluate the site response at a given site. In particular, the average shear wave velocity in the upper 30 meters ($V_{S,30}$), is a necessary parameter to perform seismic hazard analyses. Seismic refraction surveys were performed at the sites to characterize the subsurface conditions (included as Appendix B to the main report). A summary of the average shear wave velocity in the upper 100 feet (30 meters) ($V_{S,30}$), as well as resulting Site Class in accordance with Chapter 20 of ASCE 7-16, are reported in Table D-4. Note that in the recently released 2020

NEHRP seismic provisions, there will be new site classifications and ranges for these site classes. Instead of six site classes (A-F) that are currently in ASCE 7-16, there will be nine site classes including the addition of Site Classes BC, CD, and DE. The Site Classifications for each site in accordance with both Chapter 20 of ASCE 7-16, and Chapter 20 of NEHRP 2020, are reported in Table D-4.

Table D-4. Summary of $V_{s,30}$ and Classification of the Project Sites

Reservoir	$V_{s,30}$ (m/s)	Site Class (ASCE 7-16)	Site Class (NEHRP 2020)
Agate	474	C	C
Arroyo	309	D	CD
Country Club 1 & 2	408	C	CD
Crafton Hills	603	C	C
Dearborn	421	C	CD
Fifth Avenue	352	D	CD
Highland	395	C	CD
Margarita	427	C	CD
Mill Creek 1& 2	337	D	CD
Sand Canyon	469	C	C
Smiley	420	C	CD
South	492	C	C
Sunset	329	D	CD
Texas Grove	317	D	CD
Texas Street	340	D	CD
Ward Way	432	C	CD

D.4.0 SEISMIC HAZARD ANALYSES

Site-specific ARS are developed following the procedures of Chapter 21 of ASCE 7-16. Details are discussed in the following sections.

D.4.1 Ground Motion Models

Site-specific ground motions are influenced by type of faulting, magnitude of characteristic earthquakes, and local soil conditions. Many ground motion models, also referred to as Ground Motion Prediction Equations (GMPEs) have been developed to estimate the variation of spectral acceleration with earthquake magnitude and source-to-site distance, among other parameters. The Pacific Earthquake Engineering Research (PEER) coordinated a large multidisciplinary project entitled "NGA (Next Generation Attenuation)-West 2 Research Project" (Bozorgnia et al., 2014), referred to as NGA-West2. In NGA-West2, five teams have developed and presented horizontal ground motion models for shallow crustal earthquakes in active tectonic regions including Western North America. These teams are Abrahamson et al. (2014), Boore et al. (2014), Campbell and Bozorgnia (2014), Chiou and Youngs (2014), and Idriss (2014).

All five models were considered in developing the ARS at the site, as appropriate based on the site shear wave velocities. Idriss (2014) is only applicable for sites with $V_{S,30}$ greater than 450 m/s, therefore it was not used for all locations. For sites with $V_{S,30}$ greater than 450 m/s, Idriss (2014) was assigned weight of 0.12 and the other four models were assigned equal weight of 0.22 to be consistent with the adopted weighting of the USGS (2014) in developing the NSHM. For sites with $V_{S,30}$ less than 450 m/s, all of the teams except Idriss (2014) were used with equal weight (0.25). The Intensity Measure (IM) provided by these horizontal ground motion models corresponds to the 50th percentile of the rotated orientation-independent horizontal component, RotD50, defined by Boore (2010).

The NGA-West2 relationships use measured values of shear wave velocity ($V_{S,30}$) as input, presented in Section 3 above. In addition, some of the ground motion models require input for $Z_{1.0}$ (defined as the depth in meters to a shear wave velocity of V_s = 1 km/s) and $Z_{2.5}$ (defined as the depth in km to a shear wave velocity of V_s = 2.5 km/s). These two parameters are used to capture the basin effect on site response. Redlands is not within a deep sedimentary basin, and regional basin depths are expected to be shallow.

As part of the study, deep regional shear wave velocity measurements were reviewed that are publicly available from the U.S. Community Vs Profile Database (VSPDB) (Kwak et al, 2021). The depth to Vs = 1 km/s was found to range from about 24 meters to over 116 meters, depending on location (near riverbeds the sediments were typically deeper). The estimated basin parameters from the Southern California Earthquake Center (SCEC) and Havard Community Velocity Model (SDEC/H CVM) version 11.9 were also reviewed, and the values were found to be comparable with regional measurements. Therefore, the SCEC/H values were adopted for the analyses, obtained from OpenSHA (unless site-specific data superceded it). Table D-5 presents the estimated values for $Z_{1.0}$ and $Z_{2.5}$ for the project sites.

Table D-5. Estimated Basin Depth Parameters for the Project Sites

Reservoir	$Z_{1.0}$ (m)	$Z_{2.5}$ (km)
Agate	70	0.34
Arroyo	400	0.60
Country Club 1 & 2	60	0.33
Crafton Hills	60	0.34
Dearborn	75	0.35
Fifth Avenue	60	0.35
Highland	60	0.35
Margarita	60	0.34
Mill Creek 1& 2	70	0.34
Sand Canyon	50	0.35
Smiley	380	0.58
South	60	0.34
Sunset	60	0.33
Texas Grove	360	0.46
Texas Street	360	0.46
Ward Way	70	0.34

D.4.2 Probabilistic Seismic Hazard Analyses

Site-specific Probabilistic Seismic Hazard Analyses (PSHA) were performed using the computer tool OpenSHA (Fields, 2003), using the Uniform California Earthquake Rupture Forecast, Version 3 (UCERF3) seismic source model and the updated NGA-West2 ground motion models. Uniform hazard horizontal ARS were developed up to a period of 10 seconds. All spectra were developed for 5-percent damping. The median (RotD50) ground motion was adjusted to the maximum rotated component of ground motion (RotD100) using the factors proposed by Shahi

and Baker (2014). Results of probabilistic seismic hazard spectra for all the sites are presented in Figures D-4a through D-4p.

D.4.3 Deterministic Seismic Hazard Analysis

Site-specific Deterministic Seismic Hazard Analyses (DSHA) were performed based on the characteristics of earthquake scenarios identified as predominant contributors to the regional seismic hazard. Pertinent characteristics of the earthquake scenarios include parameters such as distance from the site to the causative fault and the maximum magnitude of earthquake associated with the fault. The effects of local soil conditions ($V_{S,30}$) and the mechanism of faulting are accounted for in the ground motion models as well.

DSHAs were performed for the sources identified in Table D-2. The NGA West2 GMMs were used to develop a 5-percent damped ARS for each source. According to ASCE 7-16 Section 21.2.2, the deterministic MCE_R, which corresponds to the 84th-percentile (median plus one standard deviation), 5-percent damped spectral response accelerations in the direction of maximum horizontal response at any spectral period, must not be lower than deterministic lower limit. Therefore, the 84th-percentile spectral values obtained from the GMPEs are used to develop the deterministic spectrum. The ground motions were adjusted to the maximum rotated component of ground motion using the factors proposed by Shahi and Baker (2014). DSHA results along with ASCE 7-16 deterministic lower limit spectrum for all of the project sites are presented in Figures D-4a to D-4p.

D.4.4 Determination of Site-Specific Response Spectra

Development of the site-specific MCE_R ARS as defined by ASCE 7-16, Chapter 21.2, was performed using the seismic hazard analysis procedure described in the previous sections. In accordance with ASCE 7-16 Section 21.2.3, the site-specific MCE_R acceleration response spectra is taken as the lesser of the probabilistic and deterministic MCE_R spectra. The only exception (Section 21.2.3 of Supplement 1 to ASCE 7-16) is that the site-specific MCE_R ARS may be taken directly as the probabilistic MCE_R when the peak probabilistic spectrum is less than 1.2Fa. In addition, the site-specific MCE_R cannot be not less than 150-percent of the site-specific design spectrum in Section 21.3.

The provisions of NEHRP 2020 were also considered for this project. Therefore, for the recommended site-specific MCE_R ARS, a second lower limit was adopted following Section 21.2.3 of NEHRP 2020. The recommended site-specific MCE_R ARS is not less than 80% of the multiperiod MCE_R ARS obtained from the USGS Seismic Design Web Service for NEHRP 2020 (UGSS, 2021b).

The 5-percent damped horizontal MCE_R ARS along with comparison with the NEHRP (2020) lower limit MCE_R for all of the sites are presented in Figures D-5a to D-5p.

The site-specific Design Earthquake spectrum is equal to two-thirds of the site-specific MCE_R spectrum. The MCE_R and the Design Earthquake spectra along with the tabulated values for all the sites are presented in Figures D-6a to D-6p.

D.4.5 Site-Specific Design Acceleration Parameters

The short period design spectral acceleration (S_{DS}) and 1-second period design spectral acceleration (S_{D1}) parameters were determined in accordance with ASCE 7-16 Section 21.4. The parameter S_{DS} is taken as 90-percent of the maximum spectral acceleration from the site-specific spectrum at periods between 0.2 and 5 seconds. The parameter S_{D1} is taken as the maximum of the product between period and spectral acceleration for periods from 1 to 2 seconds for sites with a $V_{S,30}$ greater than 365 m/s, or from 1 to 5 seconds for sites with $V_{S,30}$ less than 365 m/s. The parameters S_{MS} and S_{M1} shall be taken as 1.5 times S_{DS} and S_{D1} respectively. The values obtained shall not be less than 80-percent of the values determined in accordance with ASCE 7-16, Section 11.4.3 for S_{MS} and S_{M1} and Section 11.4.5 for S_{DS} and S_{D1}. Table D-6 presents the site-specific design acceleration parameters.

Table D-6. Site-Specific Seismic Design Acceleration Parameters

Reservoir	Site-Specific Seismic Design Parameters			
	S_{MS} (g)	S_{M1} (g)	S_{DS} (g)	S_{D1} (g)
Agate	2.598	1.386	1.732	0.924
Arroyo	2.377	2.105	1.585	1.403
Country Club 1 & 2	2.048	1.480	1.365	0.987
Crafton Hills	2.214	1.038	1.476	0.692
Dearborn	2.279	1.400	1.520	0.933
Fifth Avenue	2.142	1.600	1.428	1.067
Highland	2.237	1.420	1.491	0.947
Margarita	2.087	1.460	1.391	0.973
Mill Creek 1& 2	2.609	1.928	1.739	1.286
Sand Canyon	2.263	1.177	1.509	0.785
Smiley	2.483	1.612	1.655	1.075
South	2.385	1.001	1.590	0.667
Sunset	2.068	1.560	1.379	1.040
Texas Grove	2.261	2.062	1.507	1.374
Texas Street	2.198	1.921	1.466	1.281
Ward Way	2.564	1.572	1.710	1.048

D.5 REFERENCES

Abrahamson, N., Silva, W. and Kamai, R. (2014), "Summary of the ASK14 Ground Motion Relation for Active Crustal Regions." *Earthquake Spectra*: August 2014, Vol. 30, No. 3, pp. 1025-1055.

Ancheta, T., Darragh, R., Stewart, J.P., Seyhan, E., Silva, W., Chiou, B., Wooddell, K., Graves, R., Kottke, A., Boore, D., Kishida, T., and Donahue, J. (2013), "PEER NGA-West 2 Database," PEER Report 2013/03.

(ASCE) American Society of Civil Engineers (2017). ASCE standard, ASCE/SEI 7-16, "Minimum design loads for buildings and other structures," ASCE, Reston, Virginia.

(ASCE) American Society of Civil Engineers (2018). ASCE standard, ASCE/SEI 7-16, "Minimum design loads for buildings and other structures," Supplement 1, ASCE, Reston, Virginia.

Boore, D.M. (2010), "Orientation-independent, Nongeometric-mean Measures of Seismic Intensity from two Horizontal Components of Motion," *Bulletin of the Seismological Society of America*, Vol. 99, pp. 2393-2409.

Boore, D., Stewart, J.P., Seyhan, E. and Atkinson, G.M. (2014), "NGA-West2 Equations for Predicting PGA, PGV, and 5% Damped PSA for Shallow Crustal Earthquakes." *Earthquake Spectra*: August 2014, Vol. 30, No. 3, pp. 1057-1085.

Building Seismic Safety Council (BSSC) (2015). NEHRP Recommended Seismic Provisions for New Buildings and Other Structures, Volume 1: Part 1 Provisions, Part 2 Commentary, FEMA P-1050-1, Washington, D.C., 555 pp.

Campbell, K.W., and Bozorgnia, Y. (2014), "NGA-West2 Ground Motion Model for the Average Horizontal Components of PGA, PGV, and 5% Damped Linear Acceleration Response Spectra." *Earthquake Spectra*: August 2014, Vol. 30, No. 3, pp. 1087-1115.

Chiou, B. and Youngs, R. (2014), "Update of the Chiou and Youngs NGA Model for the Average Horizontal Component of Peak Ground Motion and Response Spectra." *Earthquake Spectra*: August 2014, Vol. 30, No. 3, pp. 1117-1153.

Field, E.H., T.H. Jordan, and C.A. Cornell (2003), OpenSHA: A Developing Community-Modeling Environment for Seismic Hazard Analysis, *Seismological Research Letters*, **74**, no. 4, p. 406-419.

Field, E.H., Biasi, G.P., Bird, P., Dawson, T.E., Felzer, K.R., Jackson, D.D., Johnson, K.M., Jordan, T.H., Madden, C., Michael, A.J., Milner, K.R., Page, M.T., Parsons, T., Powers, P.M., Shaw, B.E., Thatcher, W.R., Weldon, R.J., and Zeng, Y. (2013). *Uniform California Earthquake Rupture Forecast, Version 3 (UCERF3) – The Time-Independent Model*, U.S. Geological Survey Open-File Report 2013-1165, U.S. Geological Survey, Reston, Virginia, 2013.

Idriss, I.M. (2014), "An NGA-West2 Empirical Model for Estimating the Horizontal Spectral Values Generated by Shallow Crustal Earthquakes. *Earthquake Spectra*: August 2014, Vol. 30, No. 3, pp. 1155-1177.

Kwak D.Y.; Ahdi S.K.; Wang P.; Zimmaro P.; Brandenberg S.J.; Stewart J.P. (2021). Web portal for shear wave velocity and HVSR databases in support of site response research and applications. UCLA Geotechnical Engineering Group. DOI:10.21222/C27H0V

Luco, N., Bachman, R. E., Crouse, C. B., Harris, J. R., Hooper, J. D., Kircher, C. A., Caldwell, P. J., and Rukstales, K. S. (2015). Updates to Building-Code Maps for the 2015 NEHRP Recommended Seismic Provisions, *Earthquake Spectra*, vol. 31, no. s1, pp. S245-S271, http://dx.doi.org/10.1193/042015EQS058M .

National Earthquake Hazards Reduction Program, (2020). "NEHRP Recommended Seismic Provisions for New Buildings and Other Structures," Vol. 1, Federal Emergency Management Agency Publication, FEMA P-2082-1.

(PEER) Pacific Earthquake Engineering Research (2015). Updated NGA-West2 database "flatfiles", January 17, 2015.

Petersen, M.D., M. P. Moschetti, P. M. Powers, C. S. Mueller, K. M. Haller, A. D. Frankel, Y. Zeng, S. Rezaeian, S. C. Harmsen, O. S. Boyd, N. Field, R. Chen, K. S. Rukstales, N. Luco, R. L. Wheeler, R. A. Williams, and A. H. Olsen (2014). Documentation for the 2014 update of the United States national seismic hazard maps: U.S. Geological Survey Open-File Report 2014–1091, 243 p., http://dx.doi.org/10.3133/ofr20141091 .

Rezaeian, S., Bozorgnia, Y., Idriss, I.M., Abrahamson, N., Campbell, K., and Silva, W. (2014a), "Damping Scaling Factors for Elastic Response Spectra for Shallow Crustal Earthquakes in Active Tectonic Regions: "Average" Horizontal Component," Earthquake Spectra, Vol. 30, No. 2, pp. 939-963.

Shahi, S.K., and Baker, J.W. (2014). "NGA-West2 Models for Ground Motion Directionality." Earthquake Spectra: August 2014, Vol. 30, No. 3, pp. 1285-1300.

Structural Engineers Association of California and Office of Statewide Health Planning and Development (SEAOC/OSHPD, 2019). *Seismic Design Maps* Online Tool, https://seismicmaps.org/, accessed April 8.

United States Geological Survey (USGS) (2021a). USGS National Seismic Hazard Mapping Program Unified Hazard Tool, https://earthquake.usgs.gov/hazards/interactive/.

United States Geological Survey (USGS) (2021b). NEHRP – 2020 Web Service Documentation, https://earthquake.usgs.gov/ws/designmaps/nehrp-2020.html.

LEGEND

- Historic (< 150 years), well constrained location
- Historic (< 150 years), moderately constrained location
- Historic (< 150 years), inferred location
- Latest Quaternary (
- Latest Quaternary (
- Latest Quaternary (
- Late Quaternary (< 130,000 years), well constrained location
- Late Quaternary (< 130,000 years), moderately contrained location
- Late Quaternary (< 130,000 years), inferred location
- Middle and late Quaternary (< 750,000 years), well constrained location
- Middle and late Quaternary (< 750,000 years), moderately constrained location
- Middle and late Quaternary (< 750,000 years), inferred location
- Undifferentiated Quaternary (< 1.6 million years), well constrained location
- Undifferentiated Quaternary (< 1.6 million years), moderately constrained location
- Undifferentiated Quaternary (< 1.6 million years), inferred location
- Unspecified age, well constrained location
- Unspecified age, moderately constrained location
- Unspecified age, inferred location
- Class B (various age), well constrained location
- Class B (various age), moderately constrained location
- Class B (various age), inferred location

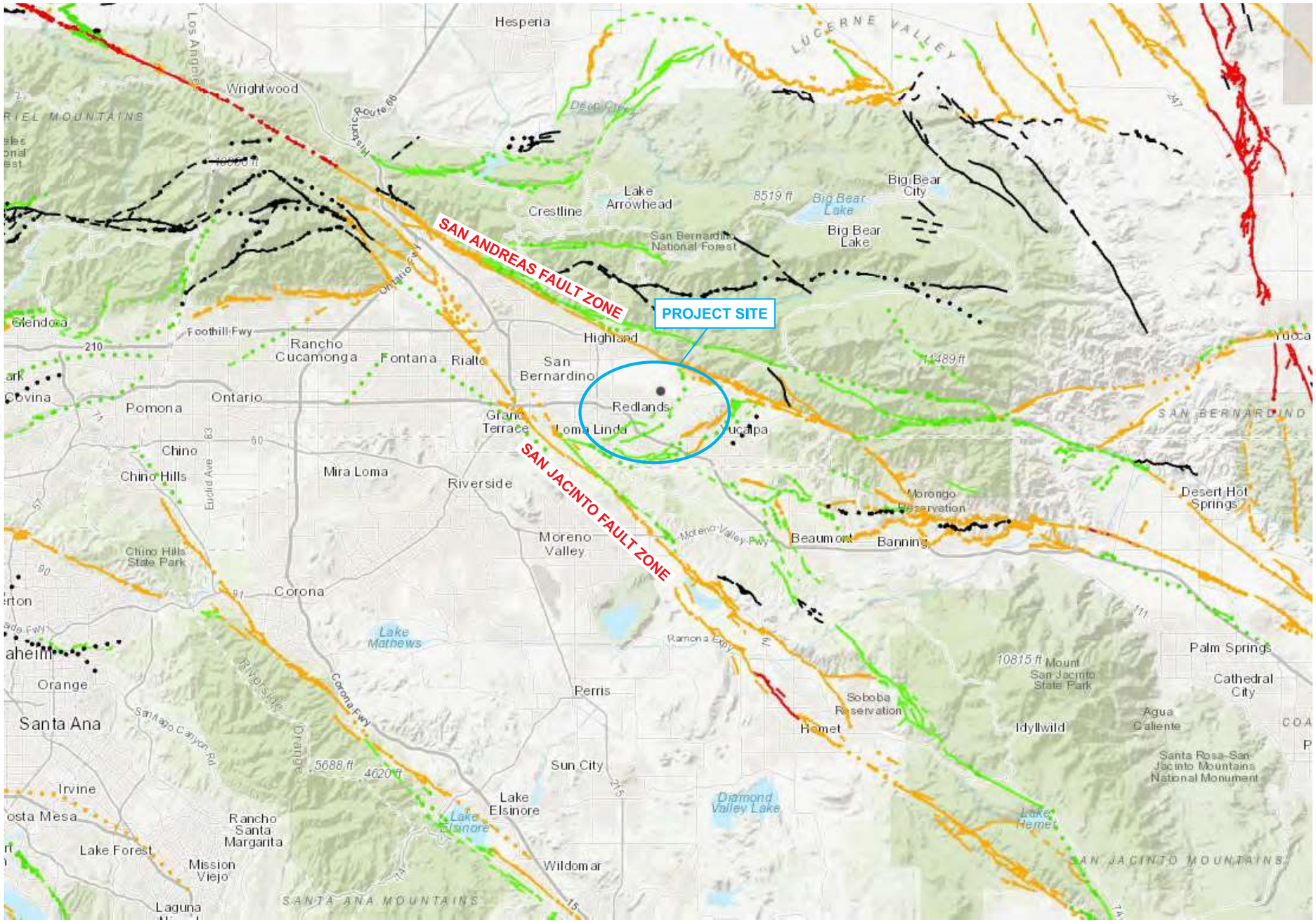

APPROXIMATE SCALE IN MILES

0 5 10

N

PROJECT NAME	FIGURE NAME	GROUP DELTA
CITY OF REDLANDS CONDITION, SEISMIC AND STRUCTURAL EVALUATION OF WATER FACILITIES	REGIONAL FAULT MAP	PROJECT NUMBER: SD691 / FIGURE NUMBER: D-1

REFERENCE: USGS Quaternary Faults Database
https://usgs.maps.arcgis.com/apps/webappviewer/index.html



APPROXIMATE SCALE IN MILES

0 1 2

STRIKE SLIP FAULT

THRUST FALUT

N

PROJECT NAME	FIGURE NAME	GROUP DELTA
CITY OF REDLANDS CONDITION, SEISMIC AND STRUCTURAL EVALUATION OF WATER FACILITIES	2014 NATIONAL SEISMIC HAZARD MAP FAULT SOURCES	PROJECT NUMBER: SD691 / FIGURE NUMBER: D-2

REFERENCE: USGS Quaternary Faults Database, NSHM 2014 Fault Sources, https://usgs.maps.arcgis.com/apps/webappviewer/index.html



APPROXIMATE SCALE IN MILES

0 1 2

STRIKE SLIP FAULT

THRUST FALUT

NORMAL FALUT

N

PROJECT NAME	FIGURE NAME	GROUP DELTA
CITY OF REDLANDS CONDITION, SEISMIC AND STRUCTURAL EVALUATION OF WATER FACILITIES	PROVISIONAL 2023 NATIONAL SEISMIC HAZARD MAP FAULT SOURCES	PROJECT NUMBER: SD691 / FIGURE NUMBER: D-3

REFERENCE: USGS Quaternary Faults Database, Provisional NSHM 2023 Fault Sources, https://usgs.maps.arcgis.com/apps/webappviewer/index.html

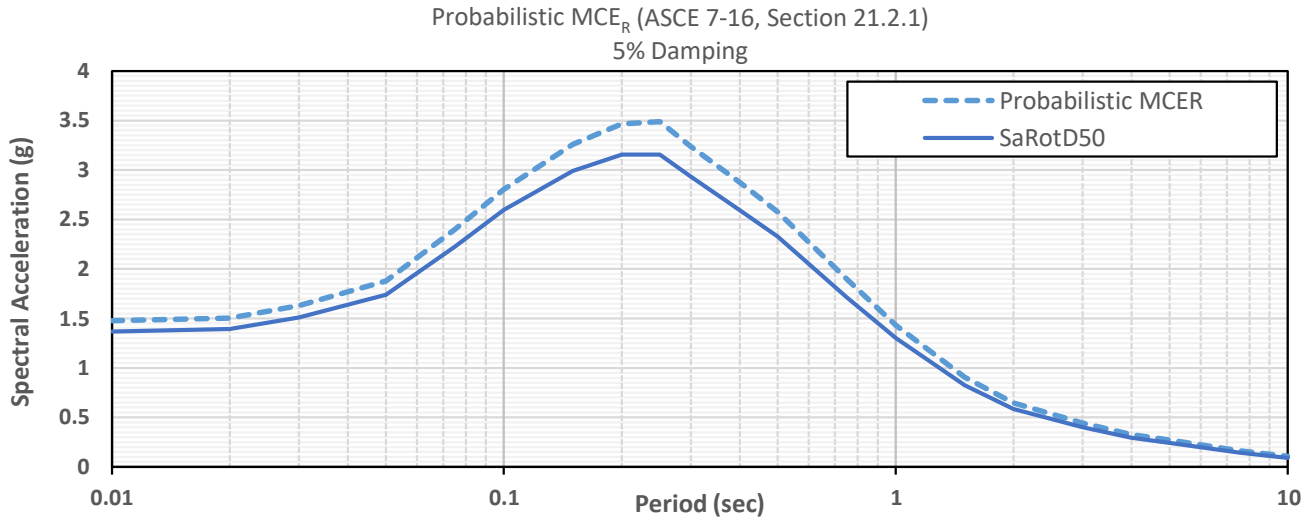

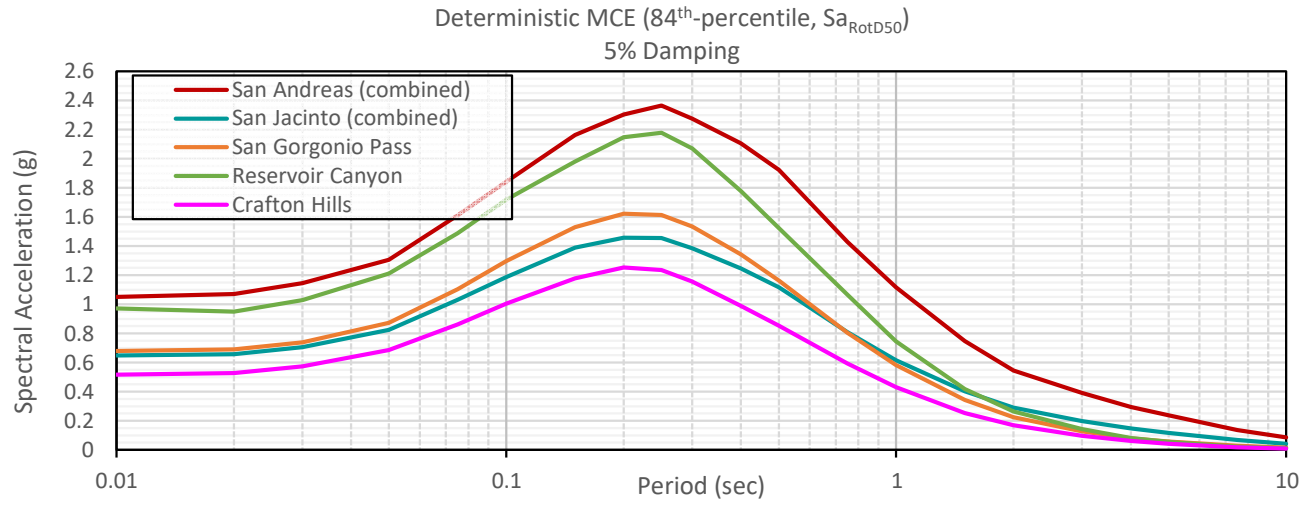

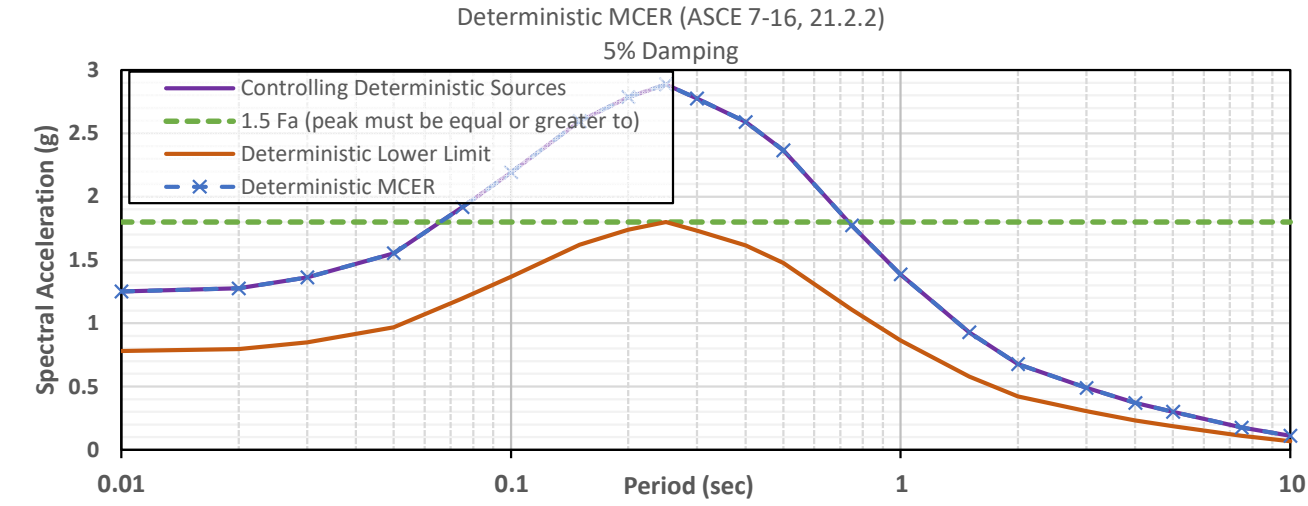

PROJECT NAME	FIGURE NAME		
City of Redlands Condition, Seismic, and Structural Assessment of Water Facilities	**Probabilistic and Deterministic MCE$_R$ Acceleration Response Spectra Agate Reservoir**	PROJECT NUMBER SD691	FIGURE NUMBER D-4a

GROUP DELTA

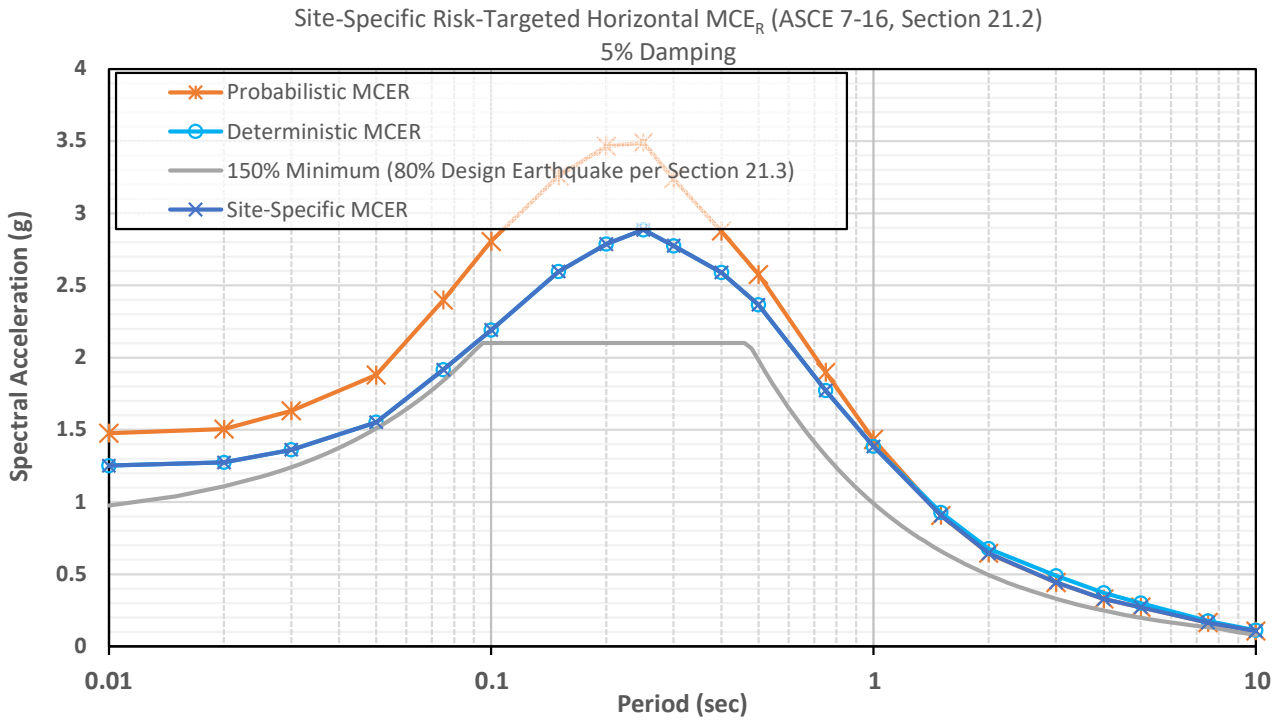

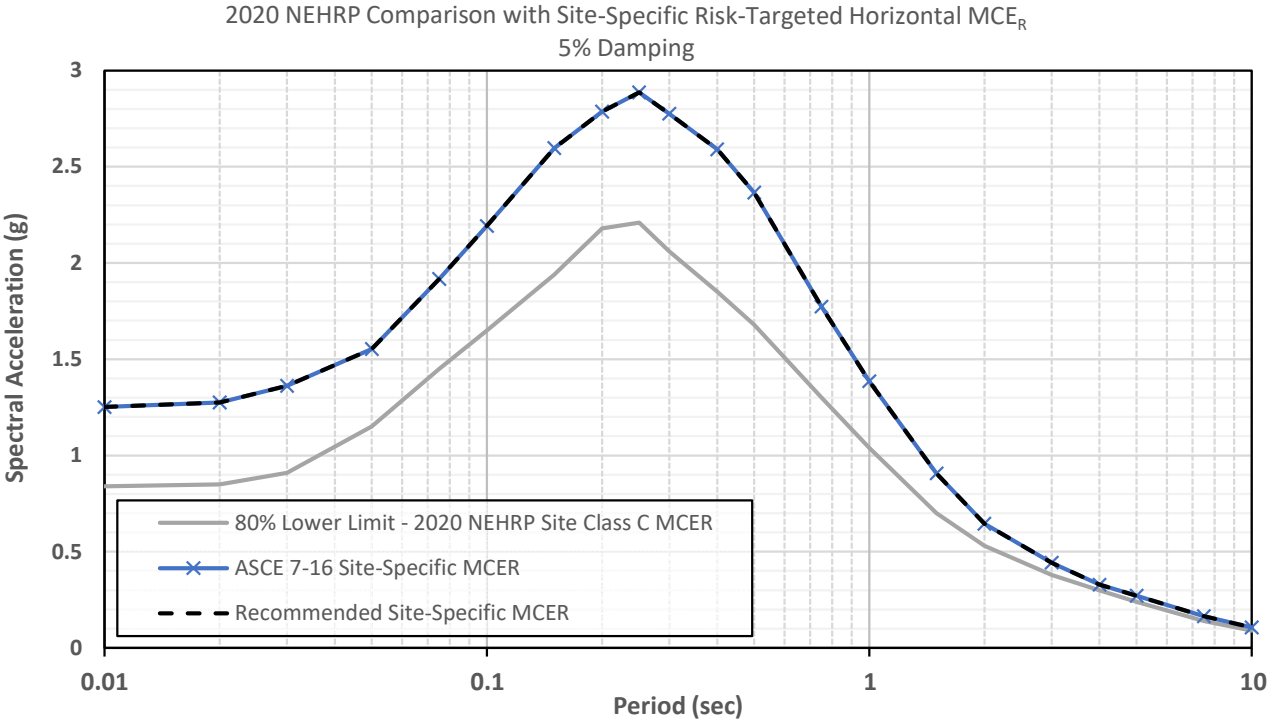

PROJECT NAME	FIGURE NAME		
City of Redlands Condition, Seismic, and Structural Assessment of Water Facilities	**Recommended MCE$_R$ Acceleration Response Spectrum Agate Reservoir**	PROJECT NUMBER: SD691	FIGURE NUMBER: D-5a

GROUP DELTA

Recommended MCE_R and Design Earthquake ARS		
Period	Design	MCE_R
(sec)	Sa (g)	Sa (g)
0.01	0.834	1.252
0.02	0.850	1.275
0.03	0.908	1.362
0.05	1.035	1.553
0.075	1.278	1.917
0.1	1.461	2.192
0.15	1.731	2.596
0.2	1.858	2.787
0.25	1.924	2.886
0.3	1.850	2.775
0.4	1.727	2.590
0.5	1.577	2.366
0.75	1.182	1.773
1	0.924	1.386
1.5	0.605	0.907
2	0.430	0.645
3	0.295	0.443
4	0.219	0.329
5	0.181	0.271
7.5	0.110	0.165
10	0.071	0.107

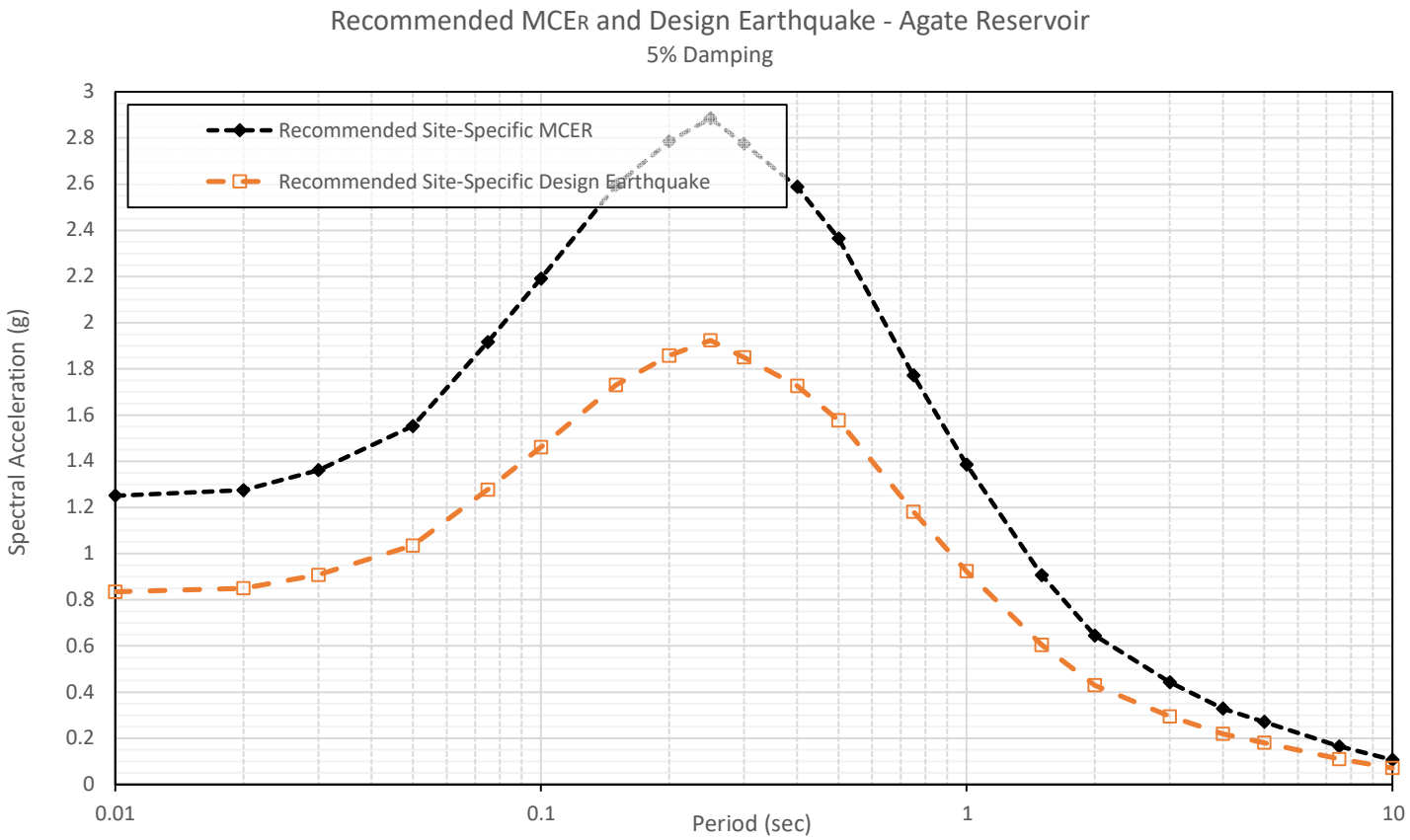

Site-Specific Design Acceleration Parameters (ASCE 7-16 Section 21.4)

S_{DS} = 90% of the peak S_a from T =0.2 to 2 s (not less than 80% of mapped S_{DS})

S_{D1} = Peak $T*S_a$ between periods of 1 second and 2 seconds (not less than 80% of mapped S_{D1})

S_{DS} = 1.732 **S_{D1} =** 0.924

PROJECT NAME	FIGURE NAME	GROUP DELTA	
City of Redlands Condition, Seismic, and Structural Assessment of Water Facilities	**Recommended MCE_R and Design Earthquake and Design Acceleration Parameters Agate Reservoir**	PROJECT NUMBER SD691	FIGURE NUMBER D-6a

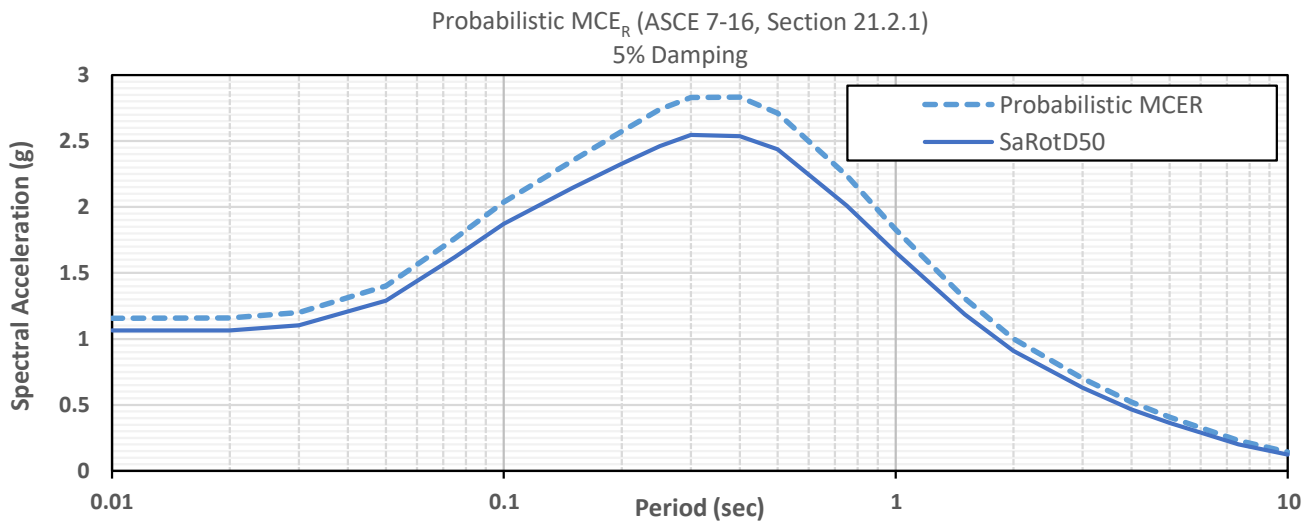

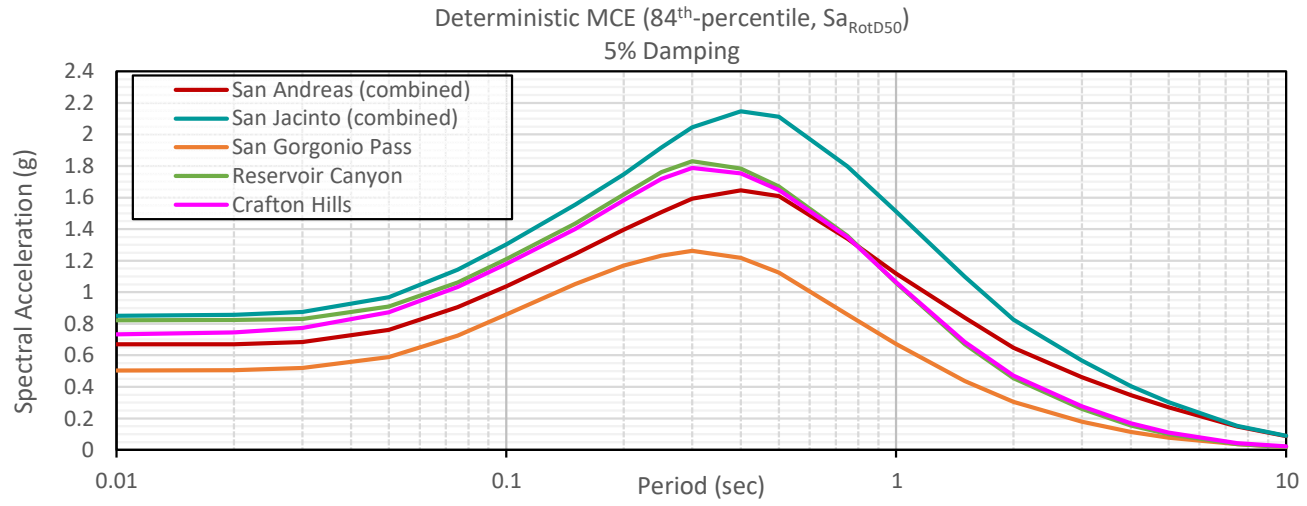

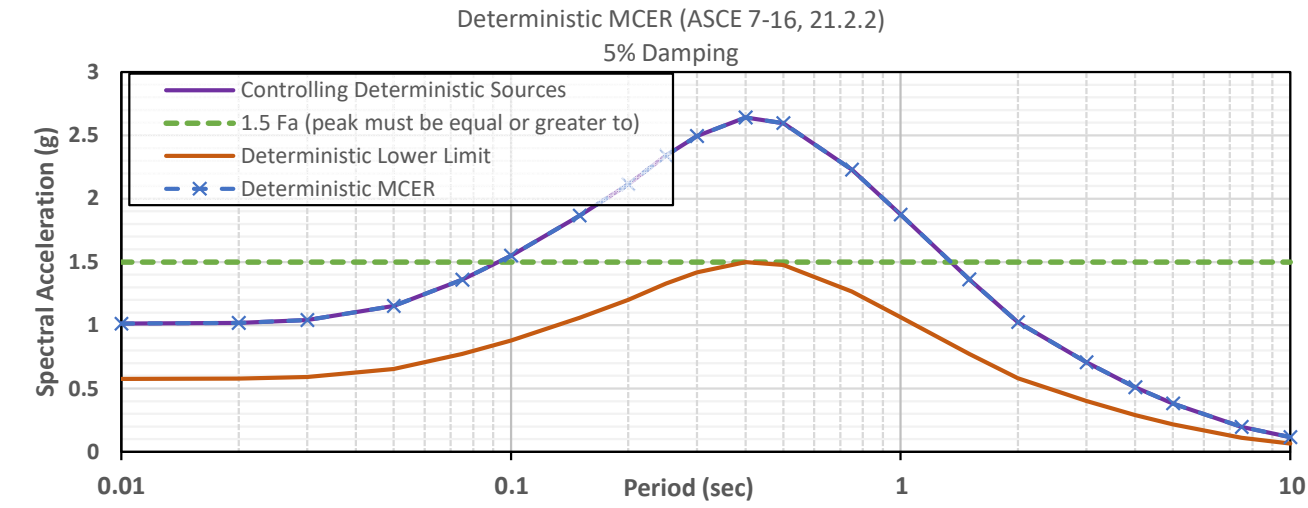

PROJECT NAME	FIGURE NAME		
City of Redlands Condition, Seismic, and Structural Assessment of Water Facilities	**Probabilistic and Deterministic MCE$_R$ Acceleration Response Spectra Arroyo Reservoir**	PROJECT NUMBER SD691	FIGURE NUMBER D-4b

GROUP DELTA

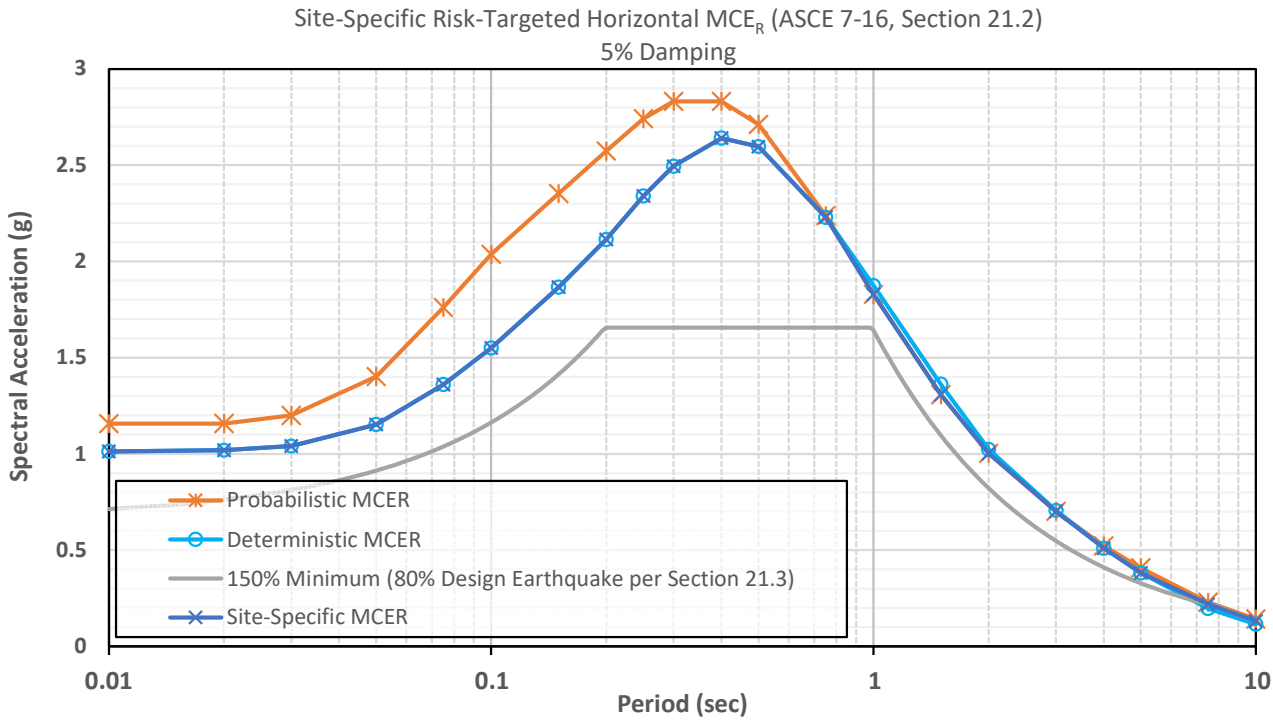

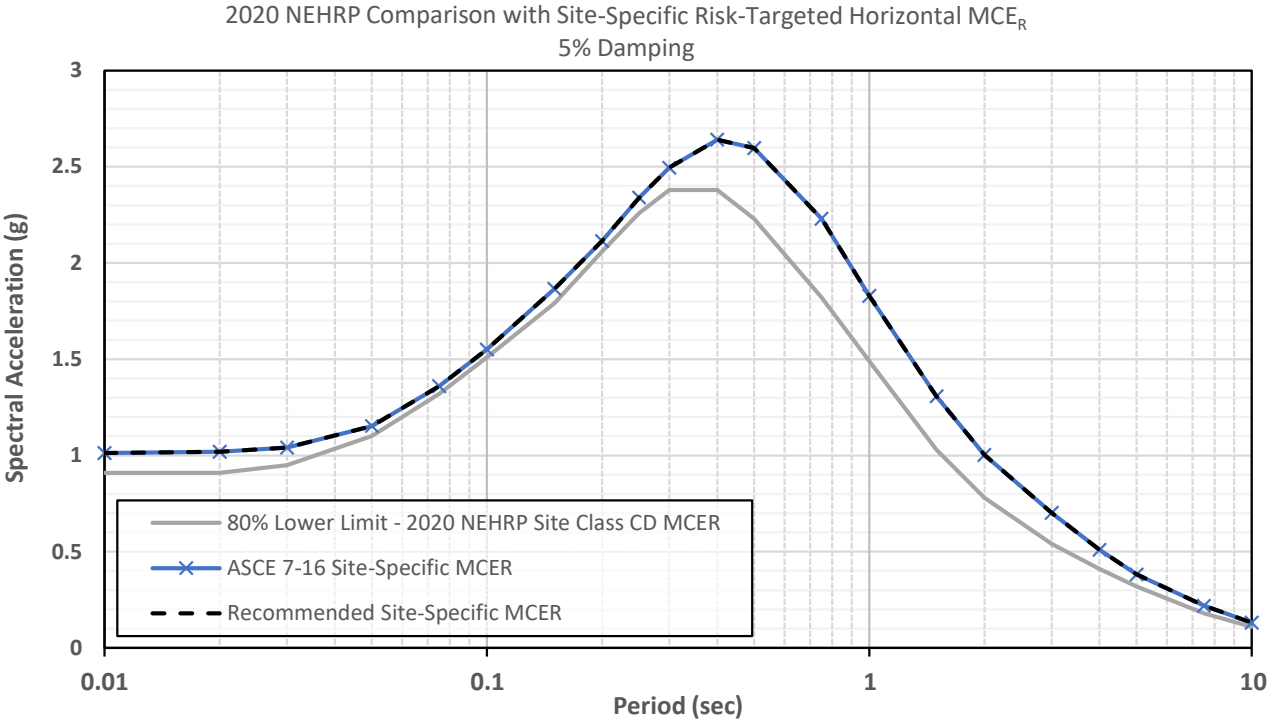

PROJECT NAME	FIGURE NAME		
City of Redlands Condition, Seismic, and Structural Assessment of Water Facilities	**Recommended MCE_R Acceleration Response Spectrum Arroyo Reservoir**	PROJECT NUMBER: SD691	FIGURE NUMBER: D-5b

GROUP DELTA

Recommended MCE_R and Design Earthquake ARS		
Period	Design	MCE_R
(sec)	Sa (g)	Sa (g)
0.01	0.675	1.012
0.02	0.679	1.019
0.03	0.694	1.041
0.05	0.769	1.153
0.075	0.907	1.360
0.1	1.034	1.550
0.15	1.244	1.866
0.2	1.409	2.114
0.25	1.560	2.340
0.3	1.663	2.495
0.4	1.761	2.641
0.5	1.731	2.597
0.75	1.486	2.229
1	1.219	1.829
1.5	0.872	1.307
2	0.668	1.002
3	0.468	0.702
4	0.340	0.510
5	0.255	0.382
7.5	0.146	0.219
10	0.088	0.132

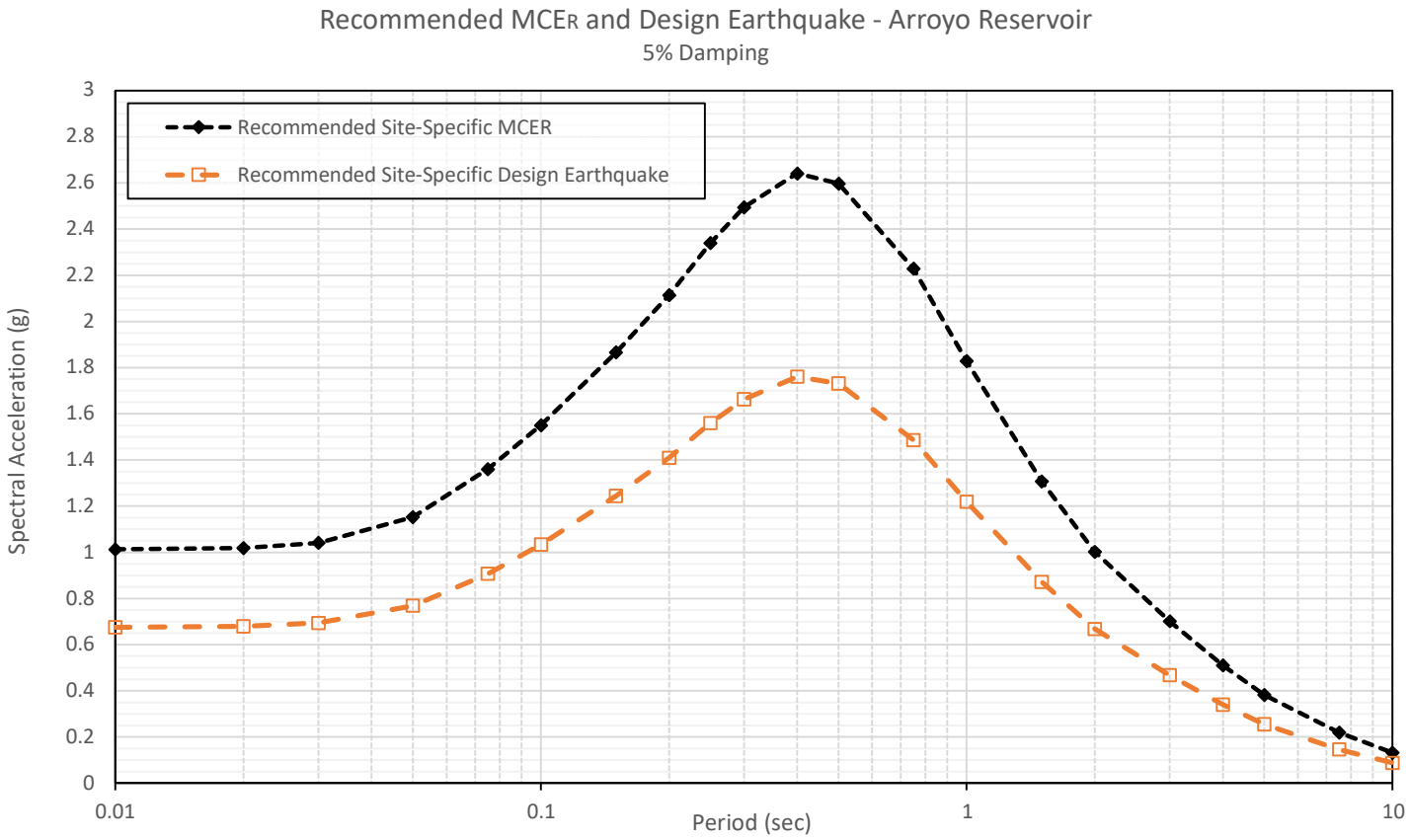

Site-Specific Design Acceleration Parameters (ASCE 7-16 Section 21.4)

S_{DS} = 90% of the peak S_a from T =0.2 to 5 s (not less than 80% of mapped S_{DS})

SD1 = Peak T*Sa between periods of 1 second and 5 seconds (not less than 80% of mapped SD1)

S_{DS} = 1.585 **S_{D1} =** 1.403

PROJECT NAME	FIGURE NAME	GROUP DELTA	
City of Redlands Condition, Seismic, and Structural Assessment of Water Facilities	**Recommended MCE_R and Design Earthquake and Design Acceleration Parameters Arroyo Reservoir**	PROJECT NUMBER SD691	FIGURE NUMBER D-6b

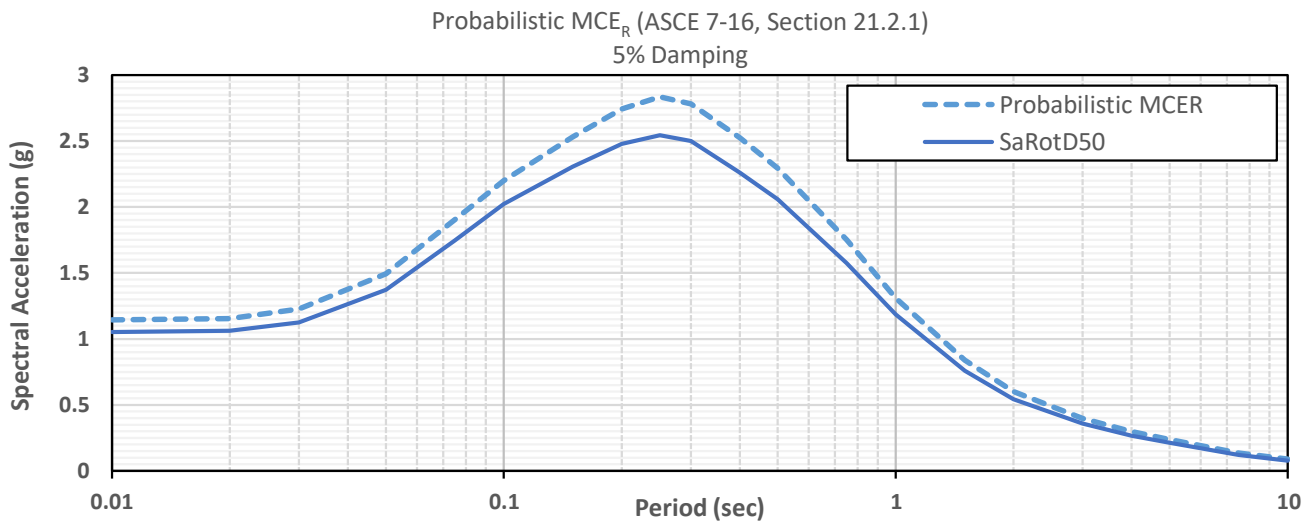

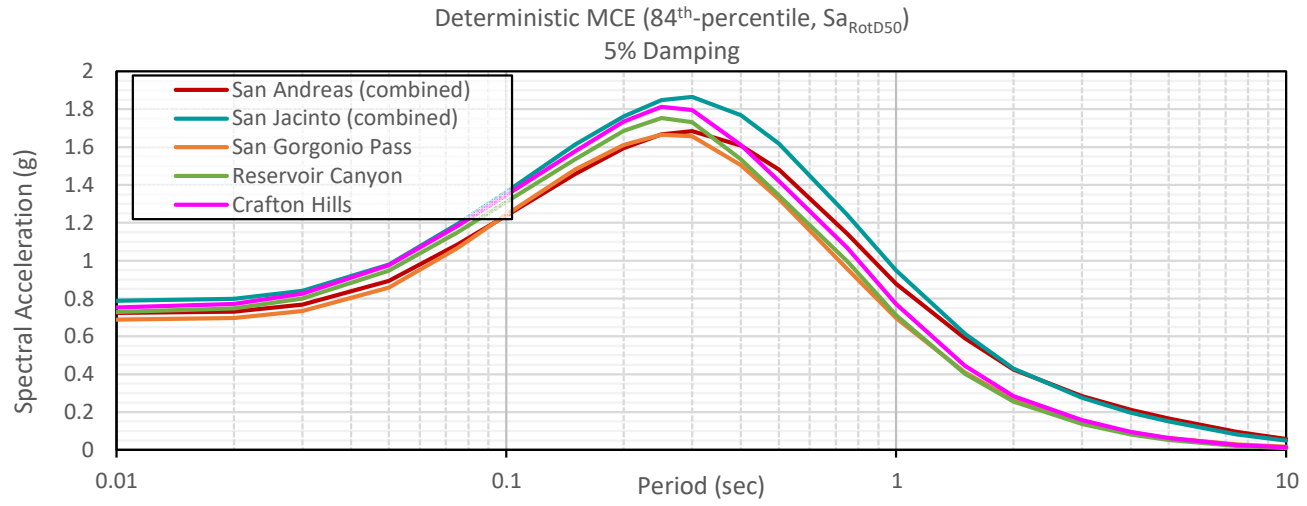

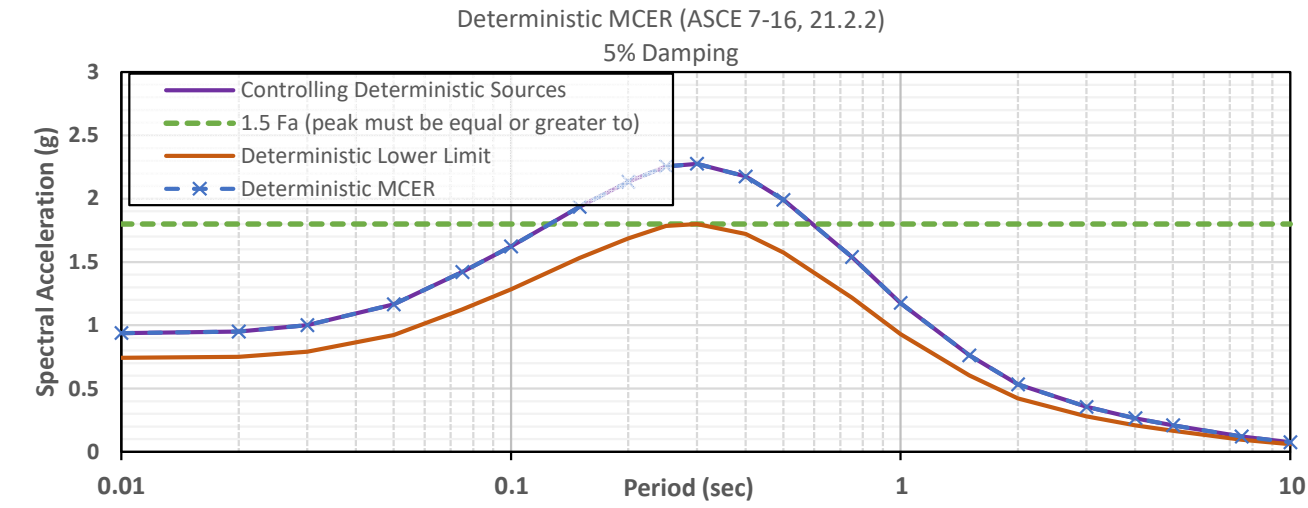

PROJECT NAME	FIGURE NAME		
City of Redlands Condition, Seismic, and Structural Assessment of Water Facilities	**Probabilistic and Deterministic MCE$_R$ Acceleration Response Spectra Country Club 1 & 2 Reservoirs**	PROJECT NUMBER SD691	FIGURE NUMBER D-4c

GROUP DELTA

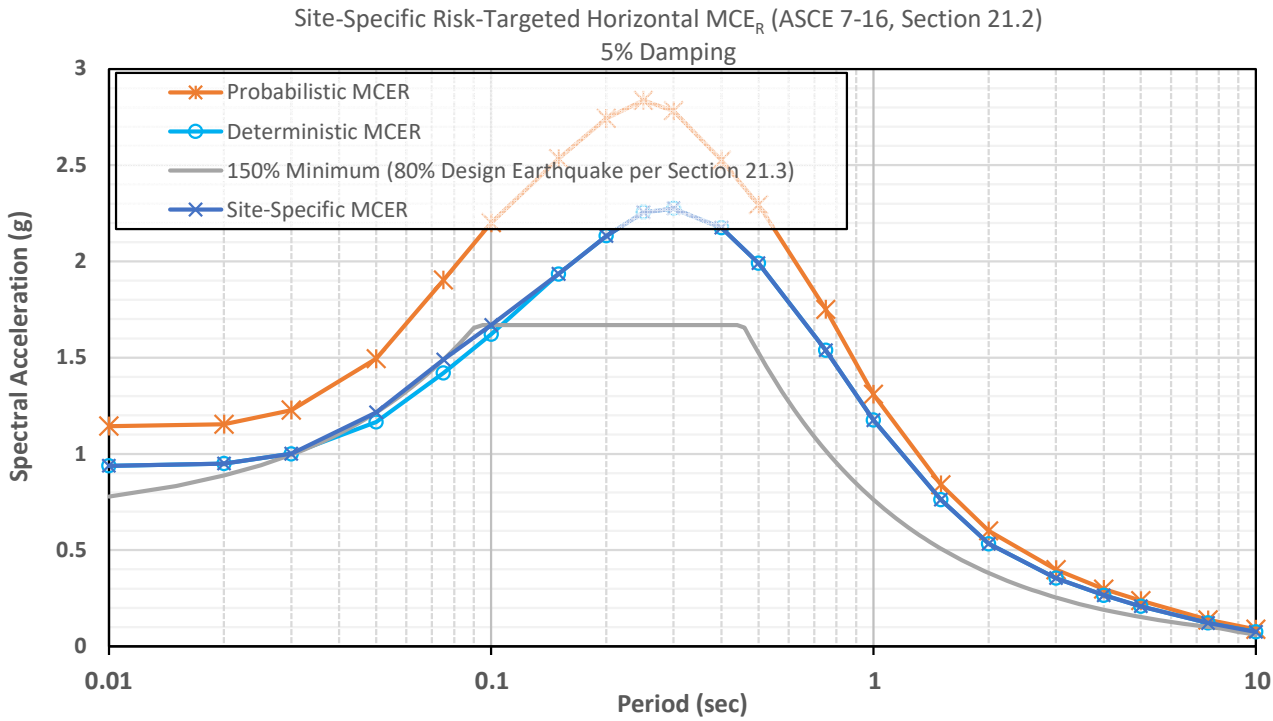

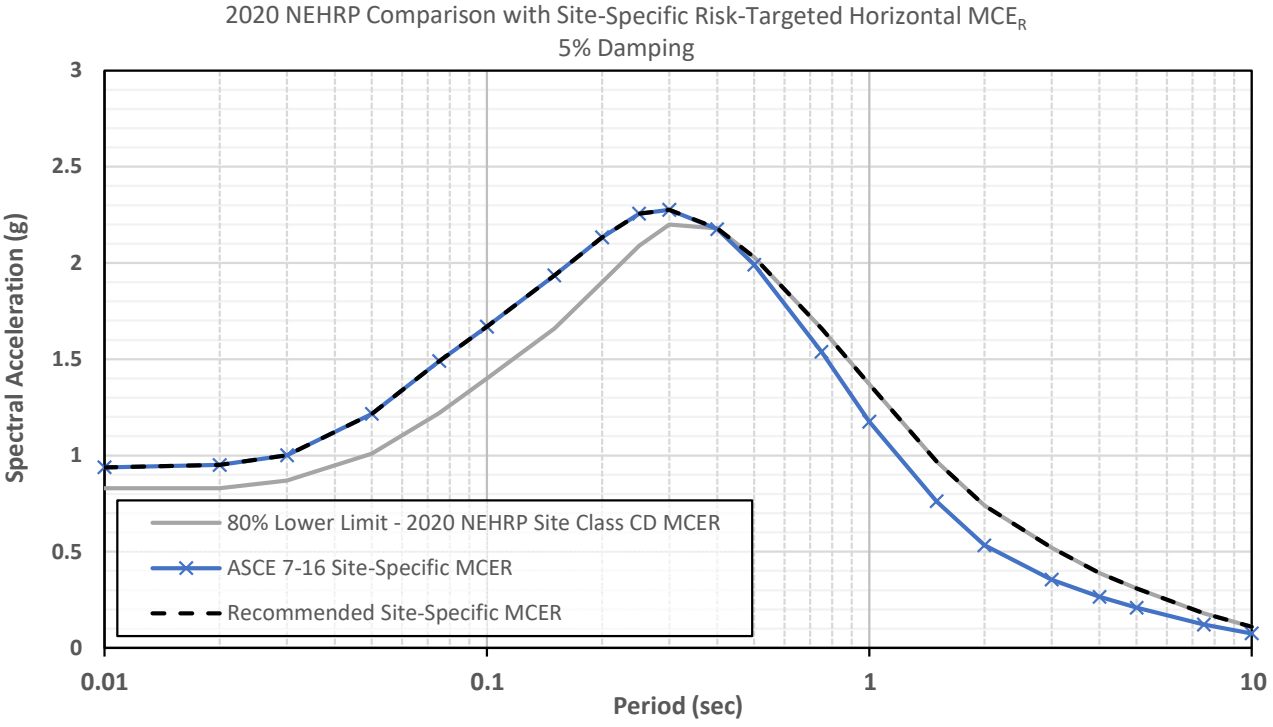

PROJECT NAME	FIGURE NAME		
City of Redlands Condition, Seismic, and Structural Assessment of Water Facilities	**Recommended MCE$_R$ Acceleration Response Spectrum Country Club 1 & 2 Reservoirs**	PROJECT NUMBER SD691	FIGURE NUMBER D-5c

GROUP DELTA

Recommended MCE_R and Design Earthquake ARS		
Period	Design	MCE_R
(sec)	Sa (g)	Sa (g)
0.01	0.626	0.938
0.02	0.633	0.950
0.03	0.667	1.001
0.05	0.811	1.216
0.075	0.994	1.490
0.1	1.113	1.669
0.15	1.290	1.935
0.2	1.422	2.133
0.25	1.504	2.256
0.3	1.517	2.276
0.4	1.453	2.180
0.5	1.353	2.030
0.75	1.107	1.660
1	0.913	1.370
1.5	0.647	0.970
2	0.493	0.740
3	0.347	0.520
4	0.260	0.390
5	0.207	0.310
7.5	0.120	0.180
10	0.073	0.110

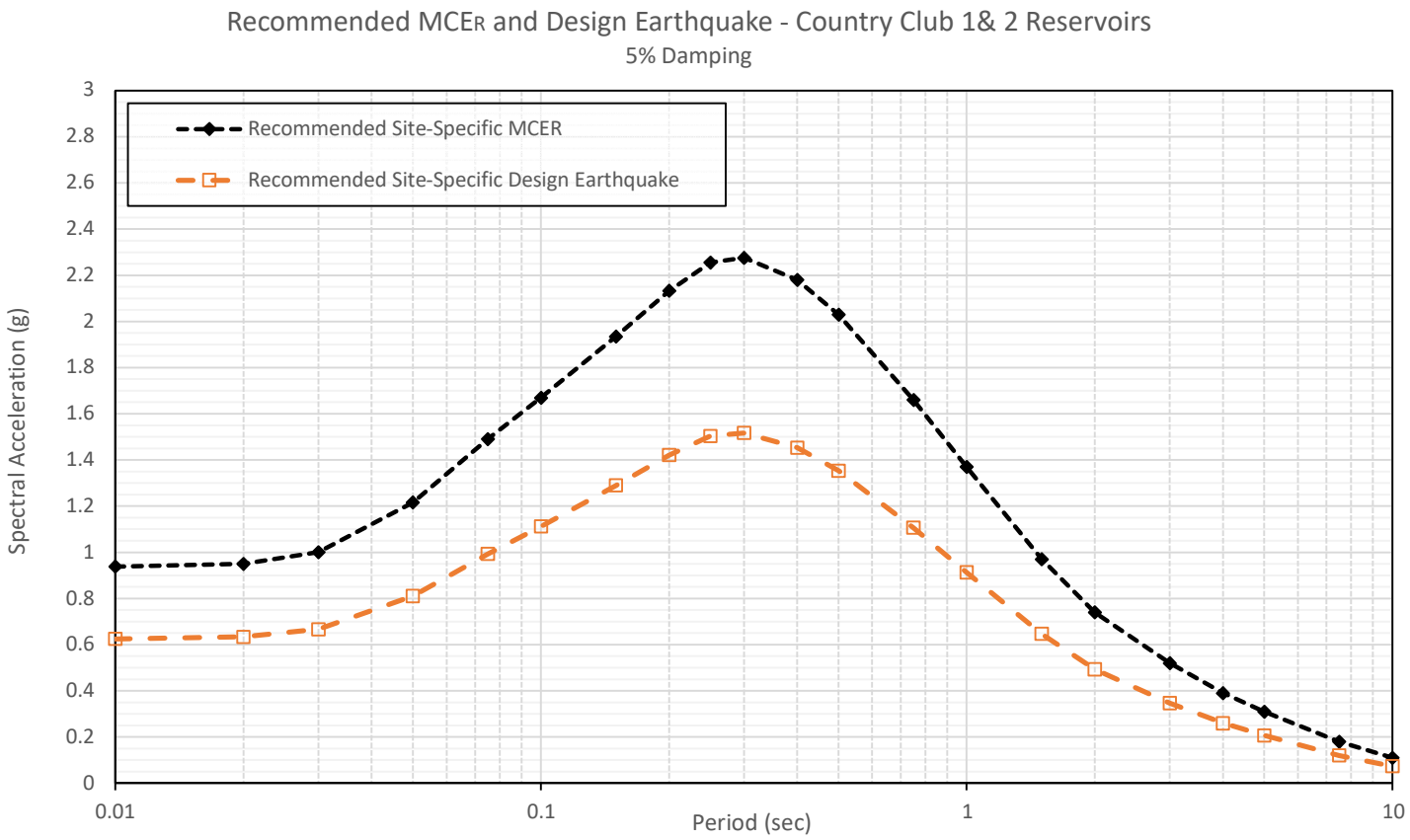

Site-Specific Design Acceleration Parameters (ASCE 7-16 Section 21.4)

S_{DS} = 90% of the peak S_a from T =0.2 to 5 s (not less than 80% of mapped S_{DS})

SD1 = Peak T*Sa between periods of 1 second and 2 seconds (not less than 80% of mapped SD1)

S_{DS} = 1.365 **S_{D1} =** 0.987

PROJECT NAME	FIGURE NAME	GROUP DELTA	
City of Redlands Condition, Seismic, and Structural Assessment of Water Facilities	**Recommended MCE_R and Design Earthquake and Design Acceleration Parameters Country Club 1 & 2 Reservoirs**	PROJECT NUMBER SD691	FIGURE NUMBER D-6c

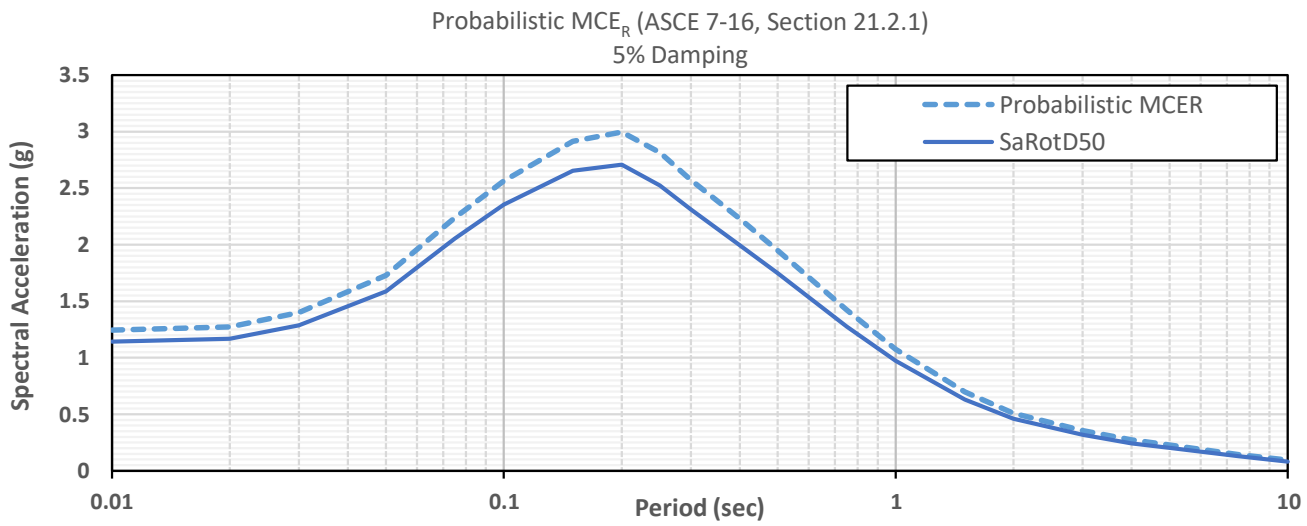

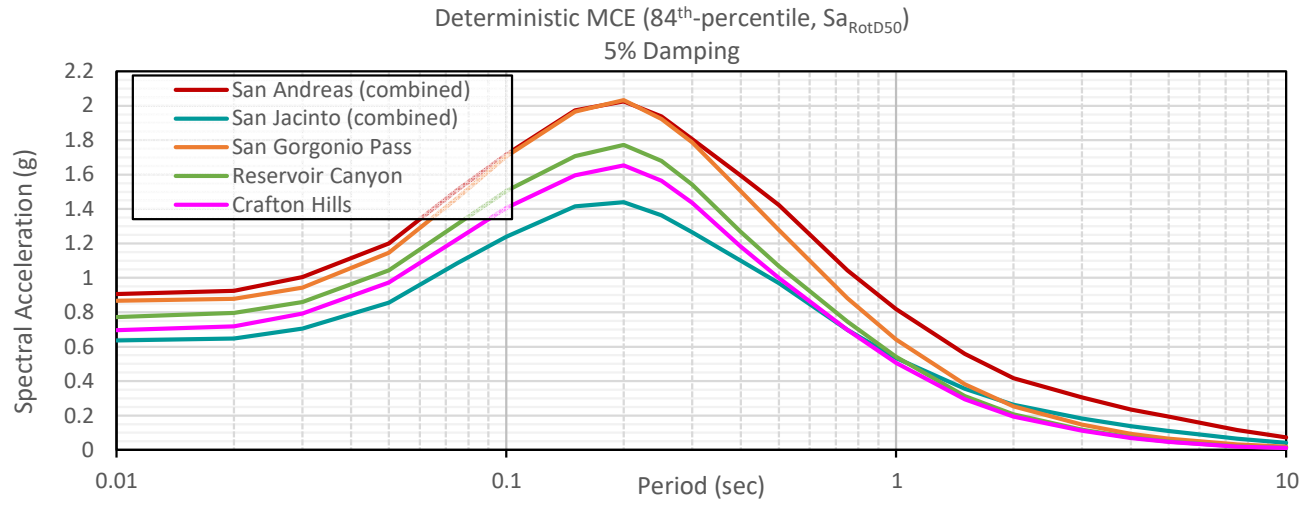

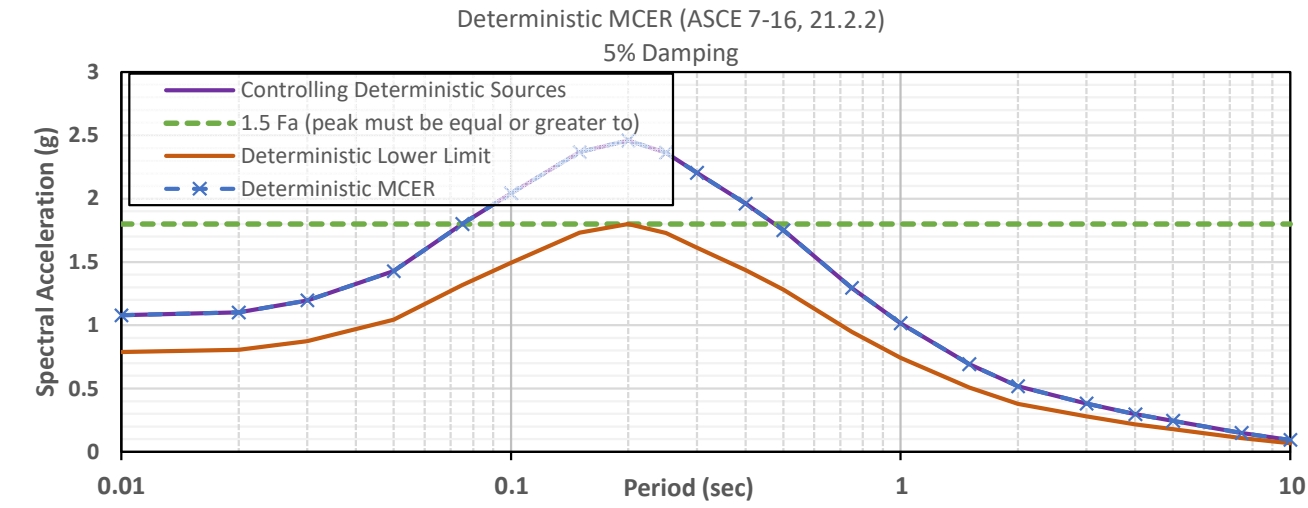

PROJECT NAME	FIGURE NAME		
City of Redlands Condition, Seismic, and Structural Assessment of Water Facilities	**Probabilistic and Deterministic MCE$_R$ Acceleration Response Spectra Crafton Hills Reservoir**	PROJECT NUMBER SD691	FIGURE NUMBER D-4d

GROUP DELTA

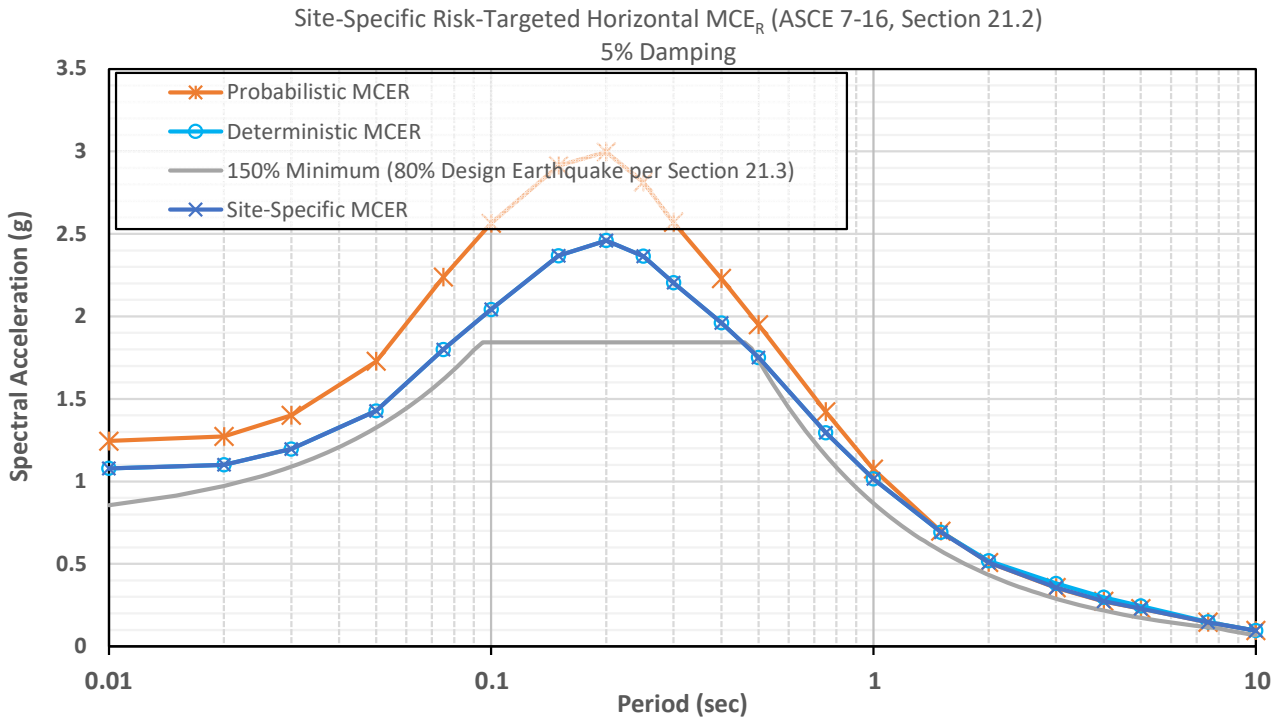

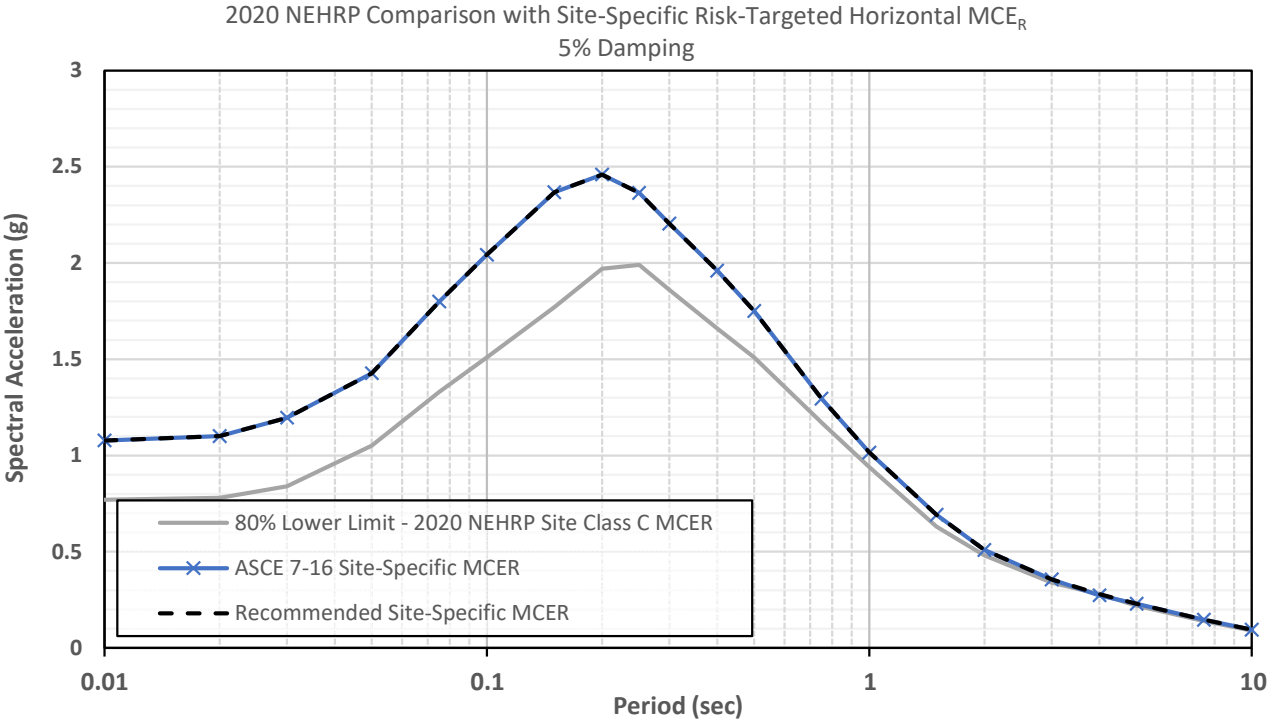

PROJECT NAME	FIGURE NAME		
City of Redlands Condition, Seismic, and Structural Assessment of Water Facilities	**Probabilistic MCE$_R$ Acceleration Response Spectrum Crafton Hills Reservoir**	PROJECT NUMBER	FIGURE NUMBER
		SD691	D-5d

GROUP DELTA

Recommended MCE_R and Design Earthquake ARS		
Period	Design	MCE_R
(sec)	Sa (g)	Sa (g)
0.01	0.719	1.078
0.02	0.734	1.101
0.03	0.797	1.196
0.05	0.951	1.427
0.075	1.200	1.799
0.1	1.362	2.043
0.15	1.578	2.367
0.2	1.640	2.460
0.25	1.576	2.364
0.3	1.470	2.204
0.4	1.307	1.961
0.5	1.167	1.751
0.75	0.863	1.295
1	0.677	1.015
1.5	0.461	0.692
2	0.339	0.509
3	0.237	0.356
4	0.187	0.280
5	0.153	0.230
7.5	0.098	0.146
10	0.063	0.095

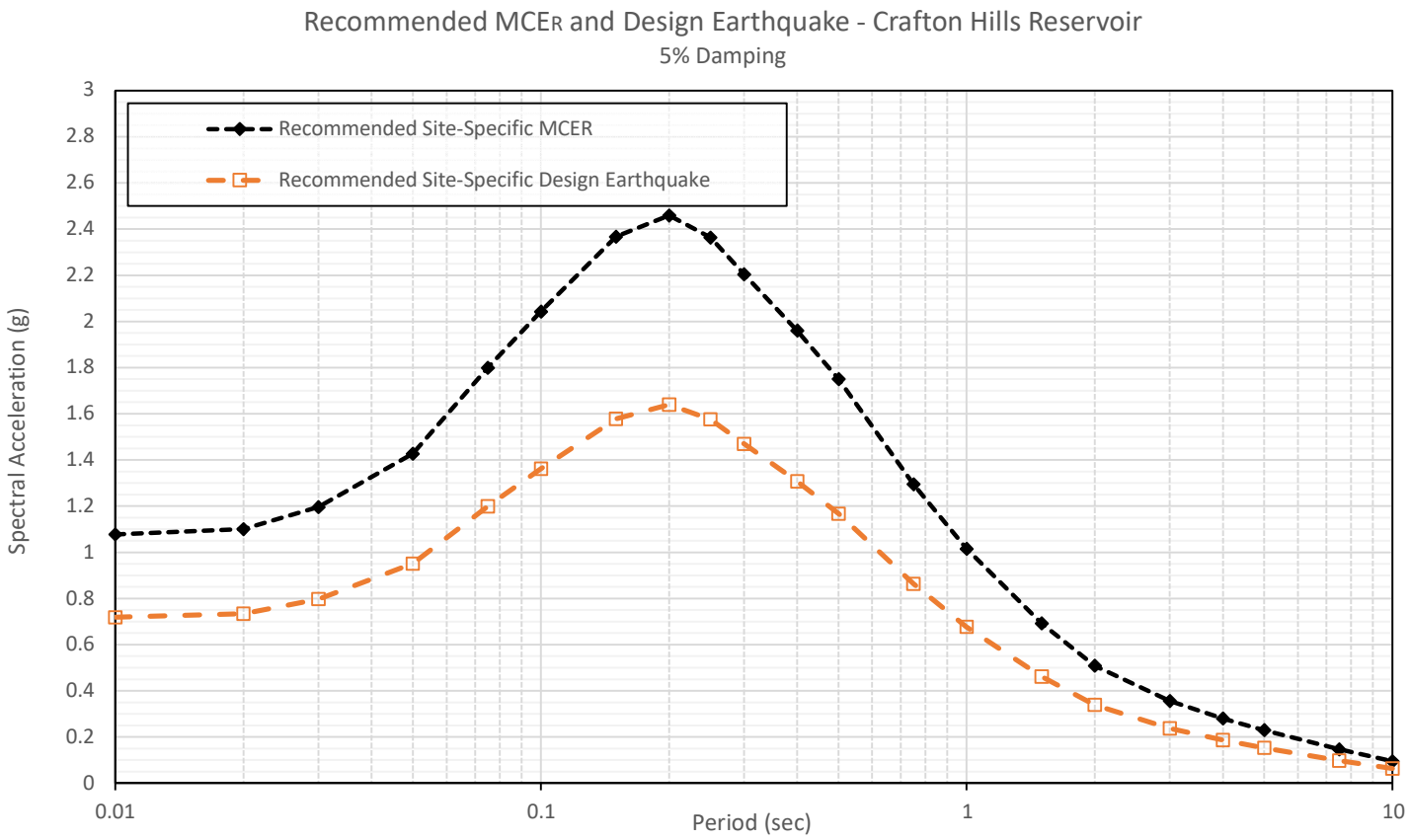

Site-Specific Design Acceleration Parameters (ASCE 7-16 Section 21.4)

S_{DS} = 90% of the peak S_a from T =0.2 to 5 s (not less than 80% of mapped S_{DS})

SD1 = Peak T*Sa between periods of 1 second and 2 seconds (not less than 80% of mapped SD1)

S_{DS} = 1.476 **S_{D1} =** 0.692

PROJECT NAME	FIGURE NAME	GROUP DELTA	
City of Redlands Condition, Seismic, and Structural Assessment of Water Facilities	**Recommended MCE_R and Design Earthquake and Design Acceleration Parameters Crafton Hills Reservoir**	PROJECT NUMBER SD691	FIGURE NUMBER D-6d

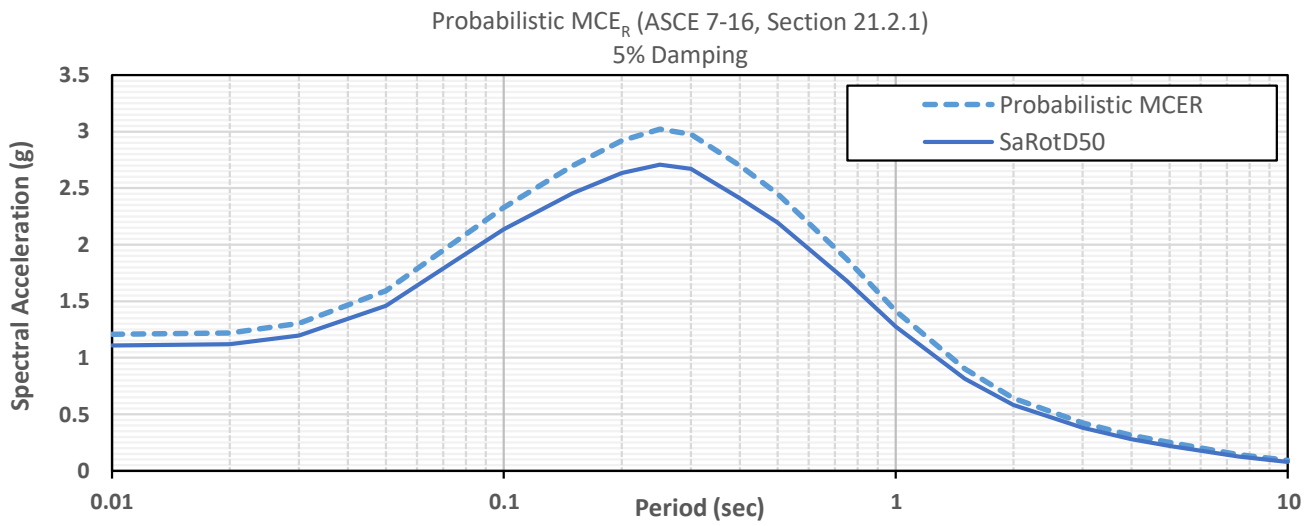

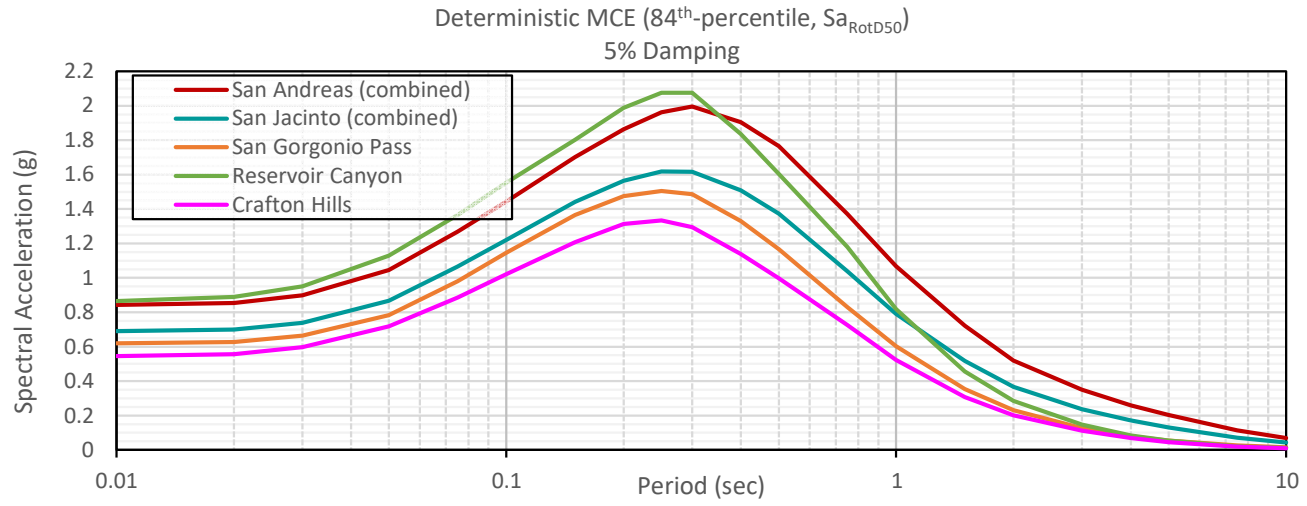

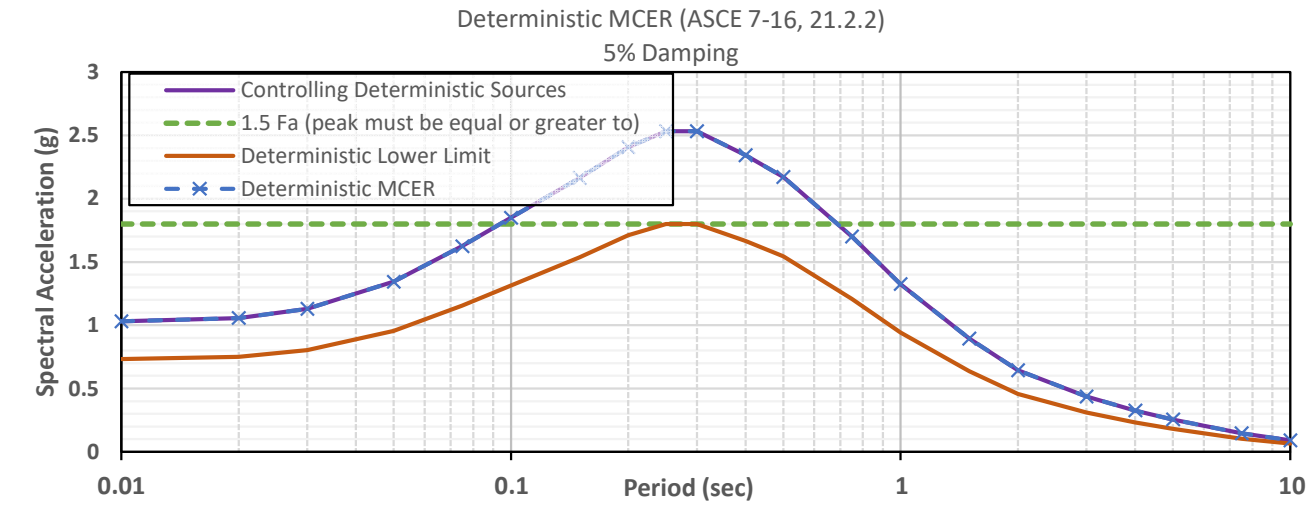

PROJECT NAME	FIGURE NAME		
City of Redlands Condition, Seismic, and Structural Assessment of Water Facilities	**Probabilistic and Deterministic MCE$_R$ Acceleration Response Spectra Dearborn Reservoir**	PROJECT NUMBER SD691	FIGURE NUMBER D-4e

GROUP DELTA

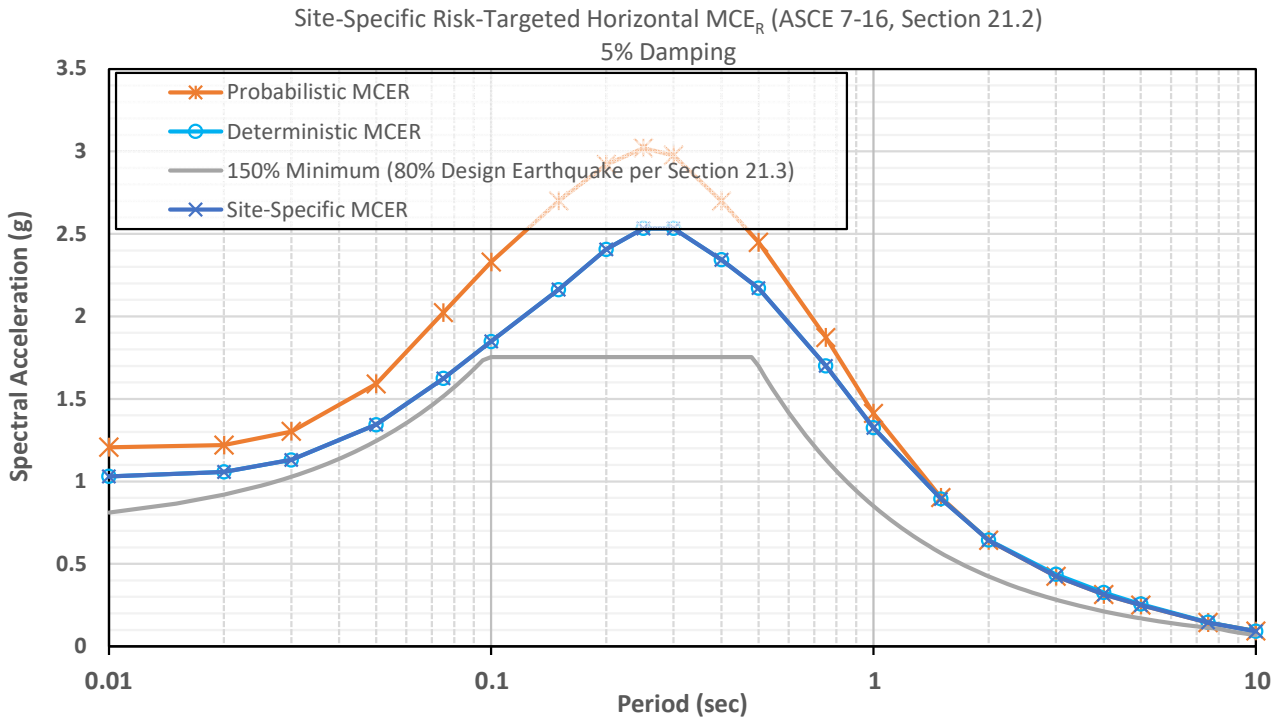

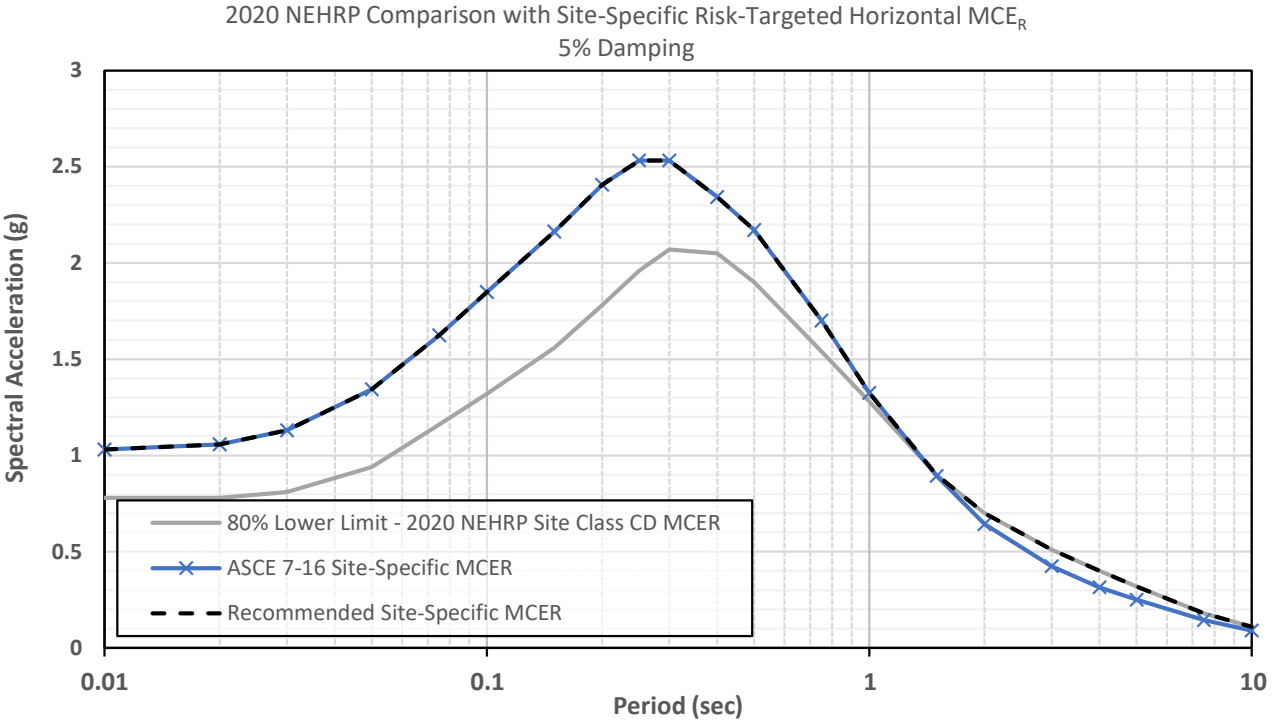

PROJECT NAME	FIGURE NAME		
City of Redlands Condition, Seismic, and Structural Assessment of Water Facilities	**Recommended MCE$_R$ Acceleration Response Spectrum Dearborn Reservoir**	PROJECT NUMBER	FIGURE NUMBER
		SD691	D-5e

GROUP DELTA

Recommended MCE_R and Design Earthquake ARS		
Period	Design	MCE_R
(sec)	Sa (g)	Sa (g)
0.01	0.687	1.031
0.02	0.705	1.058
0.03	0.753	1.130
0.05	0.896	1.343
0.075	1.083	1.624
0.1	1.233	1.849
0.15	1.442	2.163
0.2	1.604	2.406
0.25	1.688	2.533
0.3	1.688	2.533
0.4	1.562	2.343
0.5	1.447	2.171
0.75	1.134	1.701
1	0.883	1.325
1.5	0.600	0.900
2	0.467	0.700
3	0.340	0.510
4	0.267	0.400
5	0.213	0.320
7.5	0.120	0.180
10	0.073	0.110

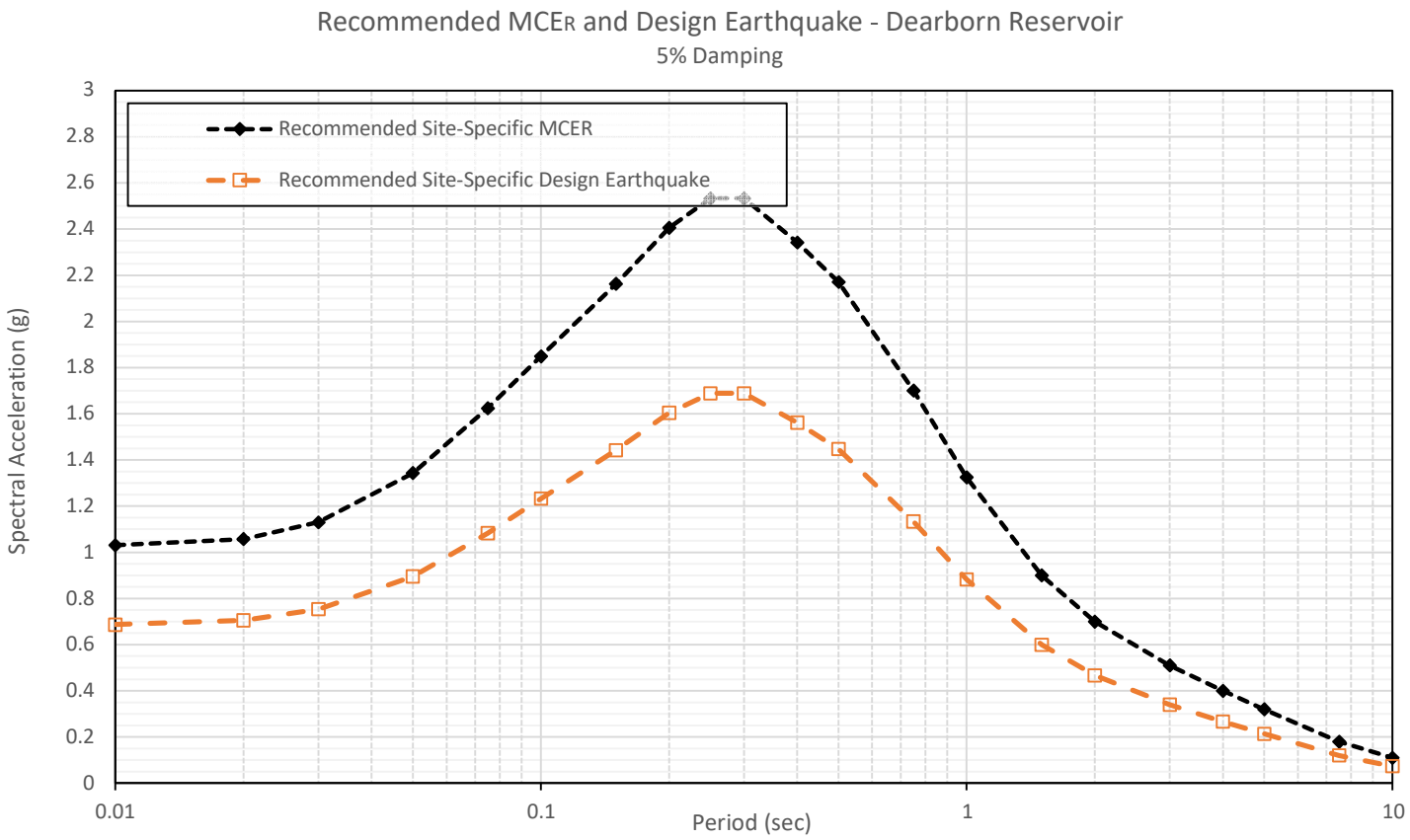

Site-Specific Design Acceleration Parameters (ASCE 7-16 Section 21.4)

S_{DS} = 90% of the peak S_a from T =0.2 to 5 s (not less than 80% of mapped S_{DS})

SD1 = Peak T*Sa between periods of 1 second and 2 seconds (not less than 80% of mapped SD1)

S_{DS} = 1.520 **S_{D1} =** 0.933

PROJECT NAME	FIGURE NAME	GROUP DELTA	
City of Redlands Condition, Seismic, and Structural Assessment of Water Facilities	**Recommended MCE_R and Design Earthquake and Design Acceleration Parameters Dearborn Reservoir**	PROJECT NUMBER SD691	FIGURE NUMBER D-6e

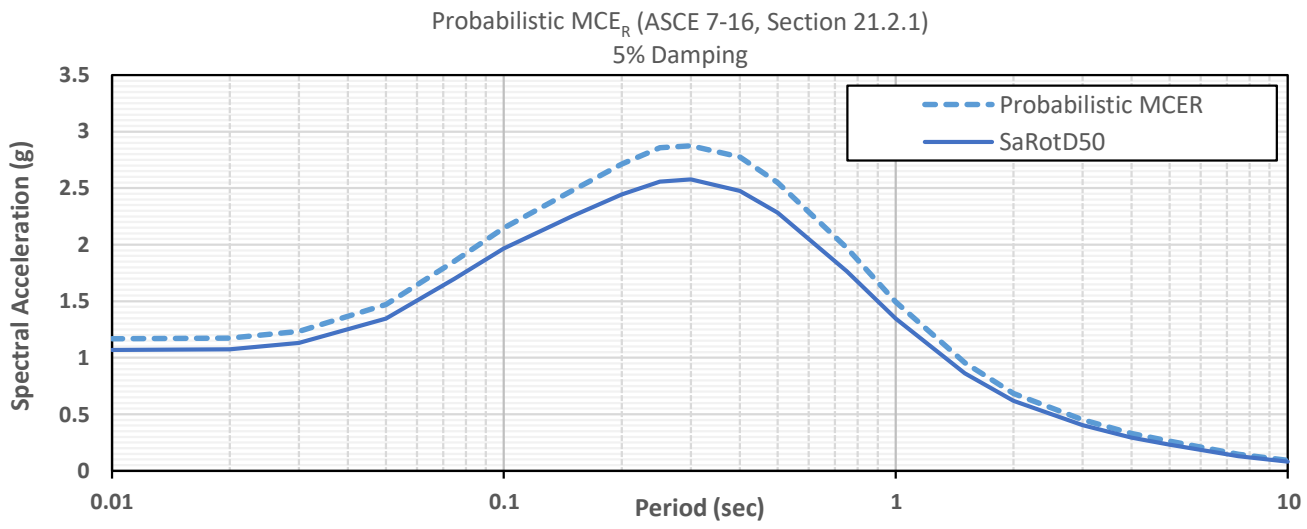

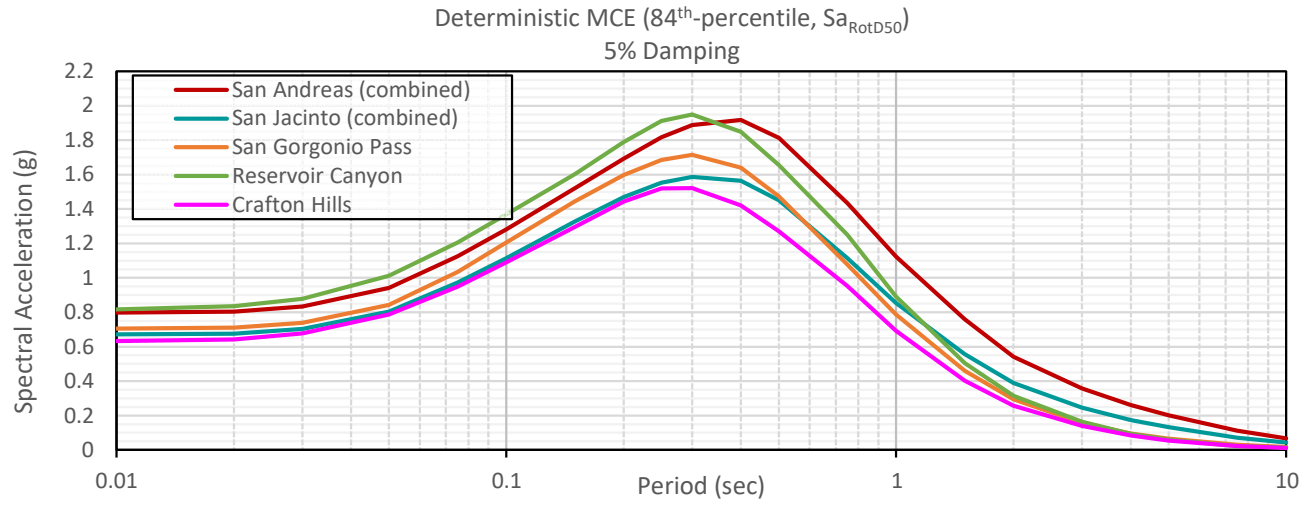

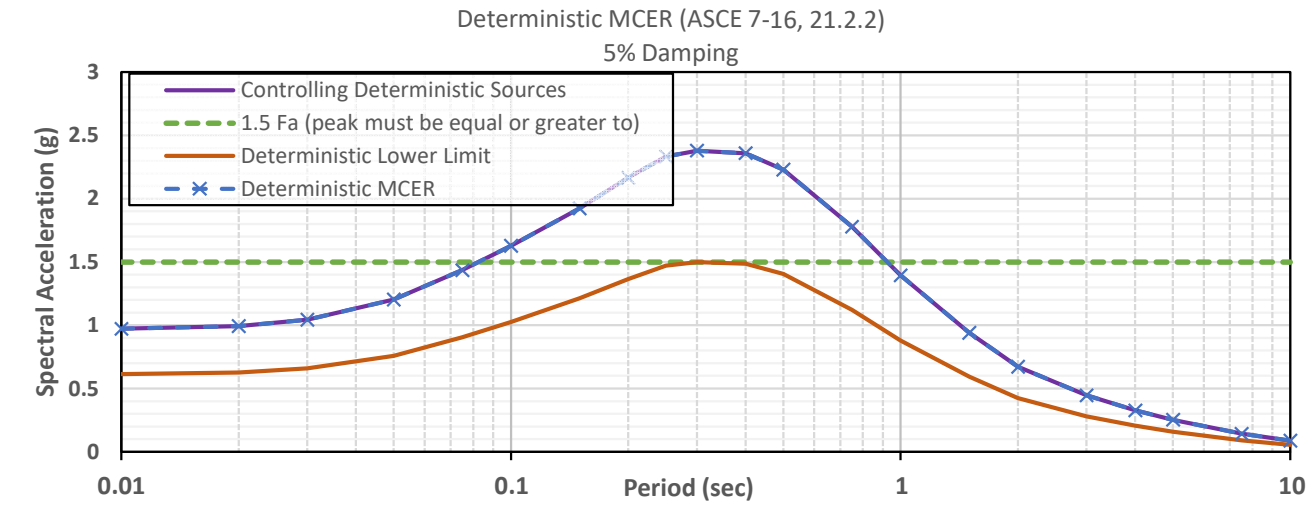

PROJECT NAME	FIGURE NAME		
City of Redlands Condition, Seismic, and Structural Assessment of Water Facilities	**Probabilistic and Deterministic MCE$_R$ Acceleration Response Spectra Fifth Avenue Reservoir**	PROJECT NUMBER SD691	FIGURE NUMBER D-4f

GROUP DELTA

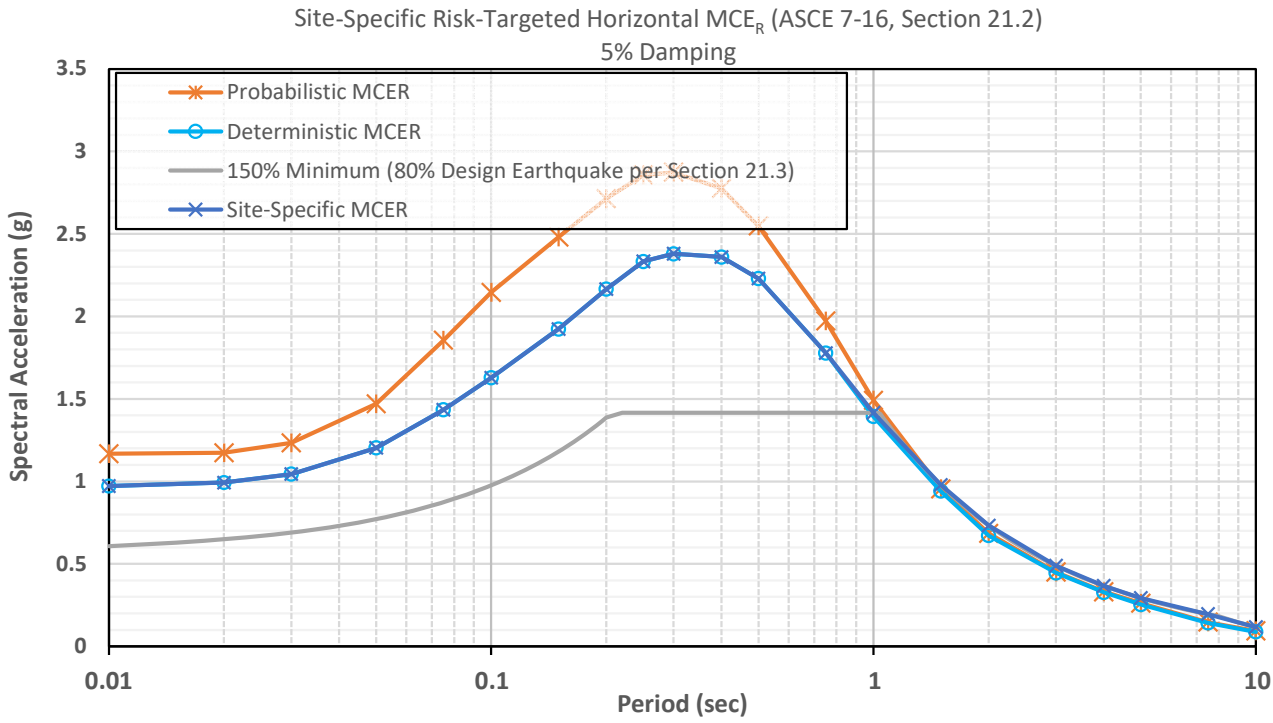

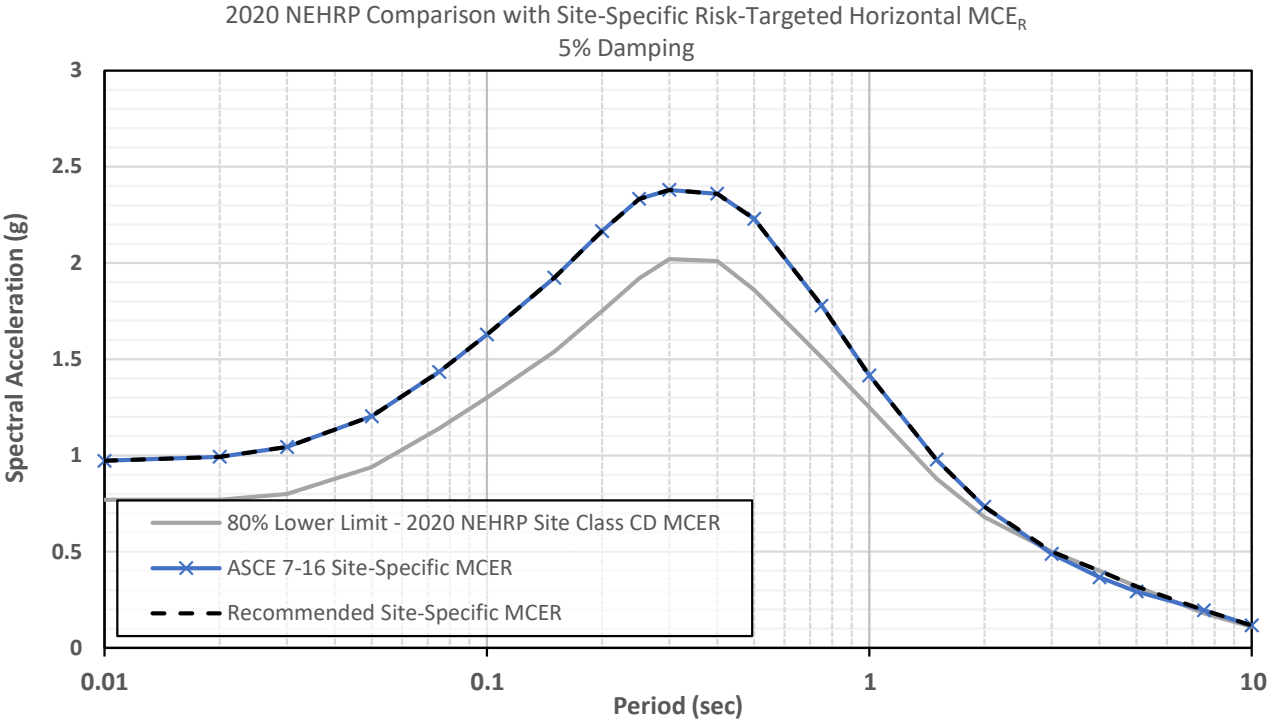

PROJECT NAME	FIGURE NAME		
City of Redlands Condition, Seismic, and Structural Assessment of Water Facilities	**Recommended MCE$_R$ Acceleration Response Spectrum Fifth Avenue Reservoir**	PROJECT NUMBER: SD691	FIGURE NUMBER: D-5f

GROUP DELTA

Recommended MCE_R and Design Earthquake ARS		
Period	Design	MCE_R
(sec)	Sa (g)	Sa (g)
0.01	0.648	0.972
0.02	0.662	0.993
0.03	0.696	1.044
0.05	0.802	1.204
0.075	0.956	1.434
0.1	1.085	1.628
0.15	1.282	1.923
0.2	1.444	2.166
0.25	1.556	2.333
0.3	1.586	2.380
0.4	1.573	2.360
0.5	1.486	2.230
0.75	1.185	1.778
1	0.944	1.416
1.5	0.652	0.978
2	0.489	0.734
3	0.333	0.500
4	0.267	0.400
5	0.213	0.320
7.5	0.130	0.196
10	0.078	0.117

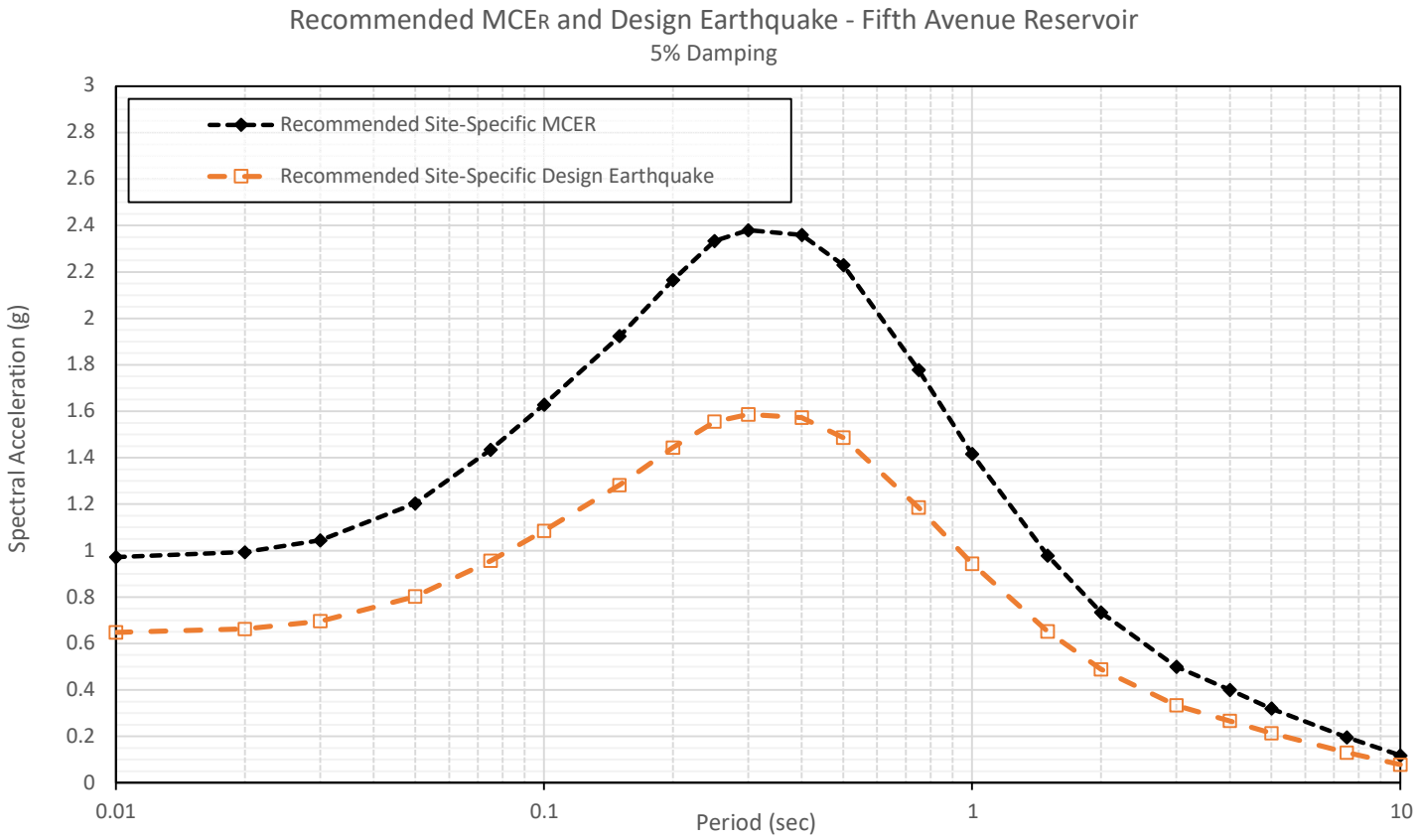

Site-Specific Design Acceleration Parameters (ASCE 7-16 Section 21.4)

S_{DS} = 90% of the peak S_a from T =0.2 to 5 s (not less than 80% of mapped S_{DS})

SD1 = Peak T*Sa between periods of 1 second and 5 seconds (not less than 80% of mapped SD1)

S_{DS} = 1.428 S_{D1} = 1.067

PROJECT NAME	FIGURE NAME	GROUP DELTA	
City of Redlands Condition, Seismic, and Structural Assessment of Water Facilities	**Recommended MCE_R and Design Earthquake and Design Acceleration Parameters Fifth Avenue Reservoir**	PROJECT NUMBER SD691	FIGURE NUMBER D-6f

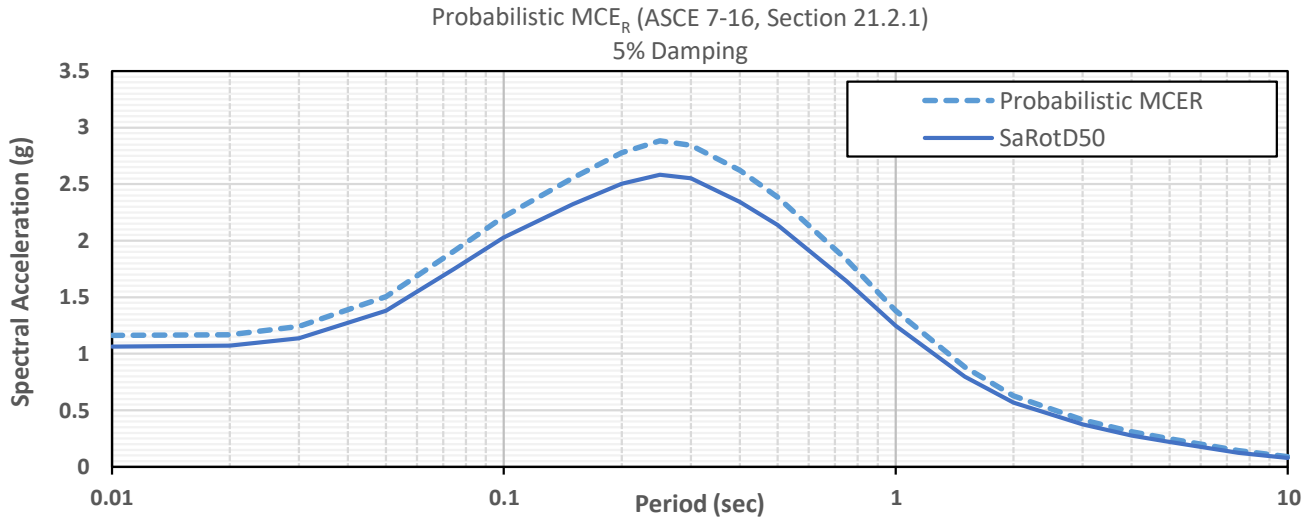

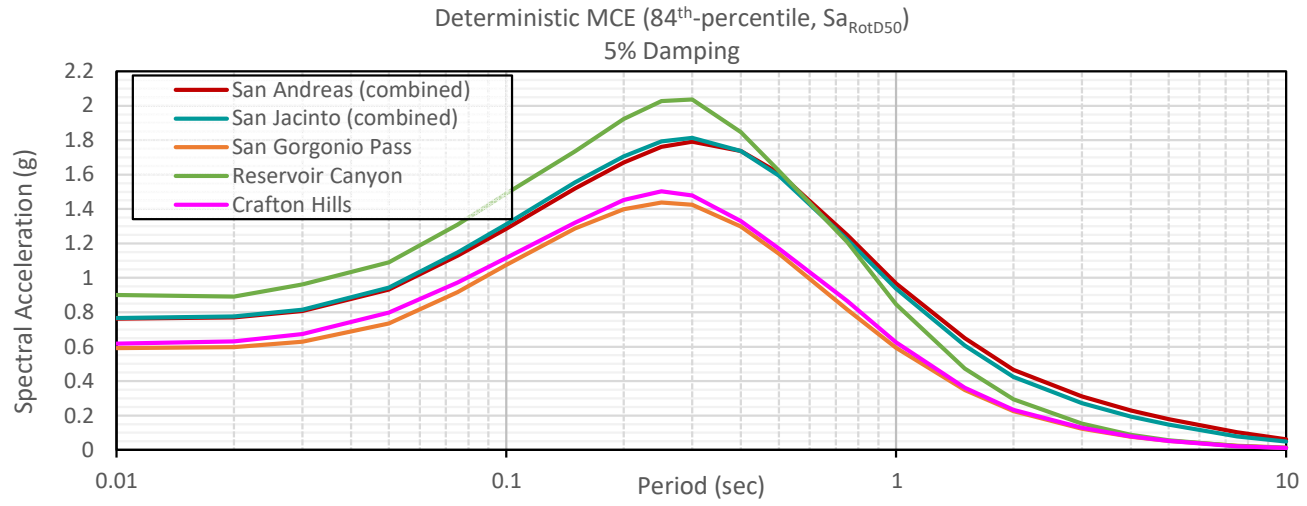

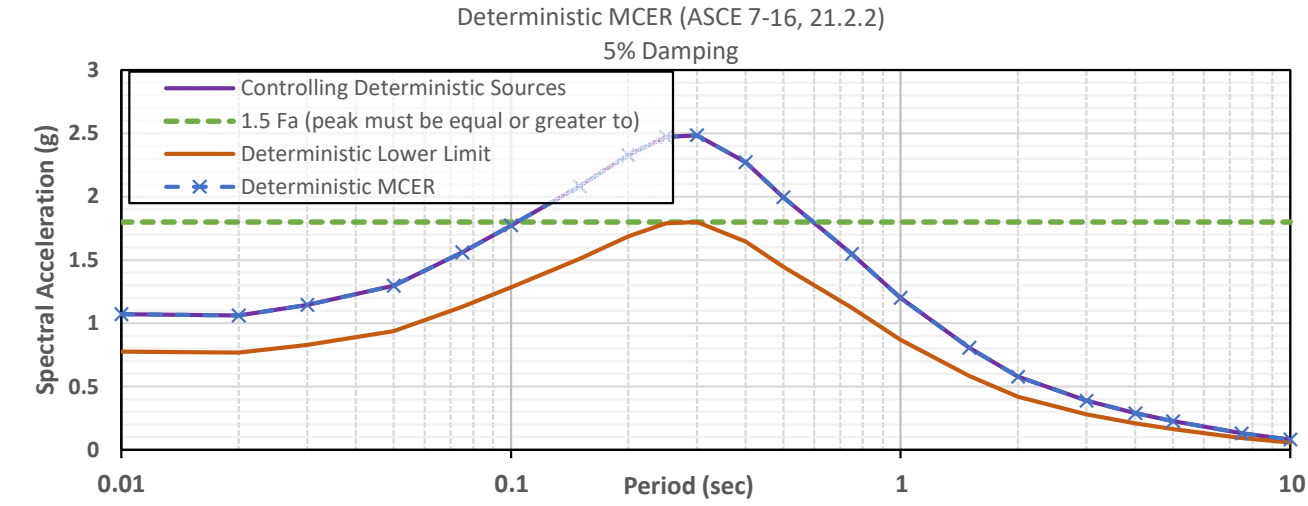

PROJECT NAME	FIGURE NAME		
City of Redlands Condition, Seismic, and Structural Assessment of Water Facilities	**Probabilistic and Deterministic MCE$_R$ Acceleration Response Spectra Highland Reservoir**	PROJECT NUMBER SD691	FIGURE NUMBER D-4g

GROUP DELTA

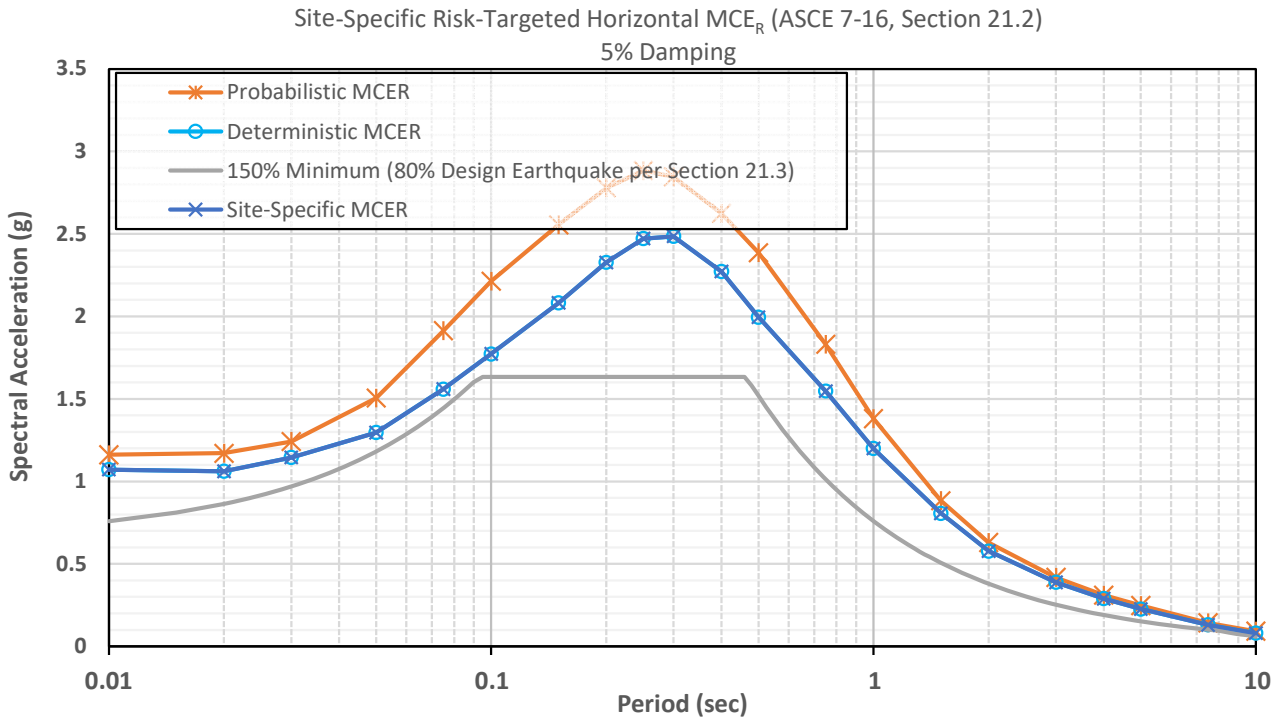

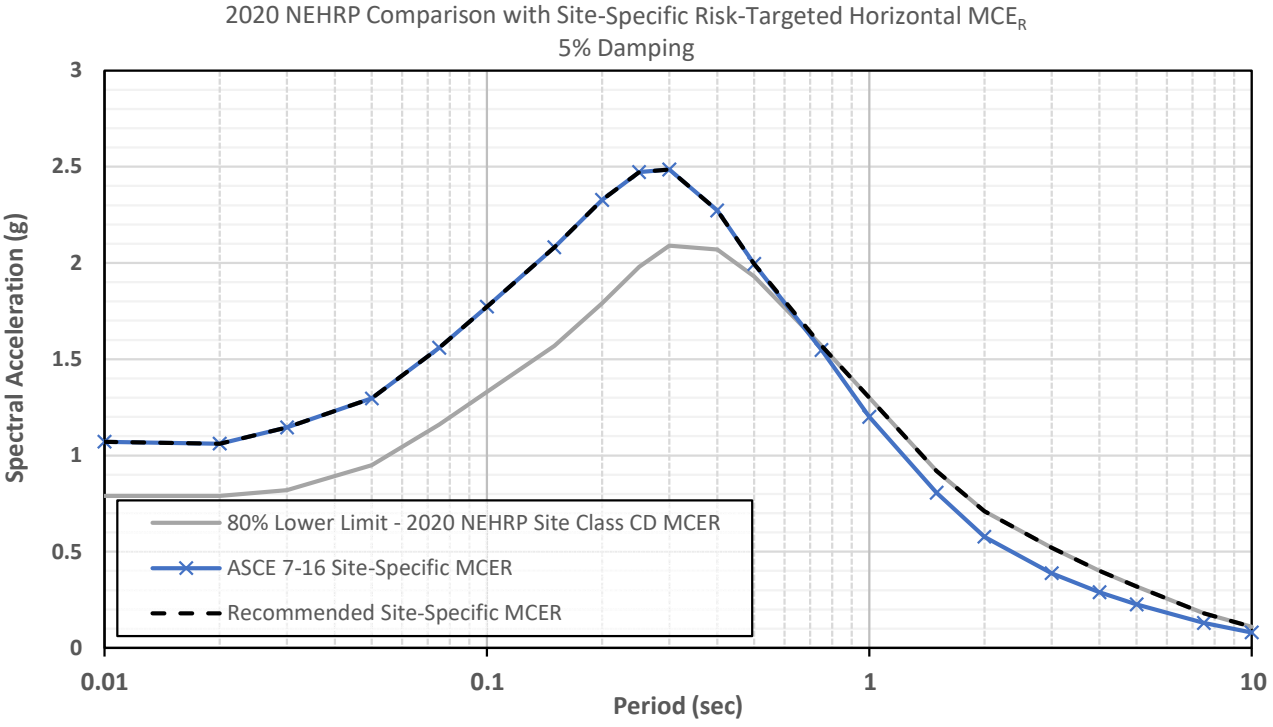

PROJECT NAME	FIGURE NAME		
City of Redlands Condition, Seismic, and Structural Assessment of Water Facilities	**Recommended MCE$_R$ Acceleration Response Spectrum Highland Reservoir**	PROJECT NUMBER: SD691	FIGURE NUMBER: D-5g

GROUP DELTA

Recommended MCE_R and Design Earthquake ARS		
Period	Design	MCE_R
(sec)	Sa (g)	Sa (g)
0.01	0.714	1.071
0.02	0.708	1.061
0.03	0.764	1.145
0.05	0.864	1.296
0.075	1.040	1.559
0.1	1.182	1.773
0.15	1.388	2.082
0.2	1.552	2.328
0.25	1.648	2.472
0.3	1.657	2.486
0.4	1.515	2.272
0.5	1.330	1.995
0.75	1.047	1.570
1	0.867	1.300
1.5	0.613	0.920
2	0.473	0.710
3	0.347	0.520
4	0.267	0.400
5	0.213	0.320
7.5	0.120	0.180
10	0.073	0.110

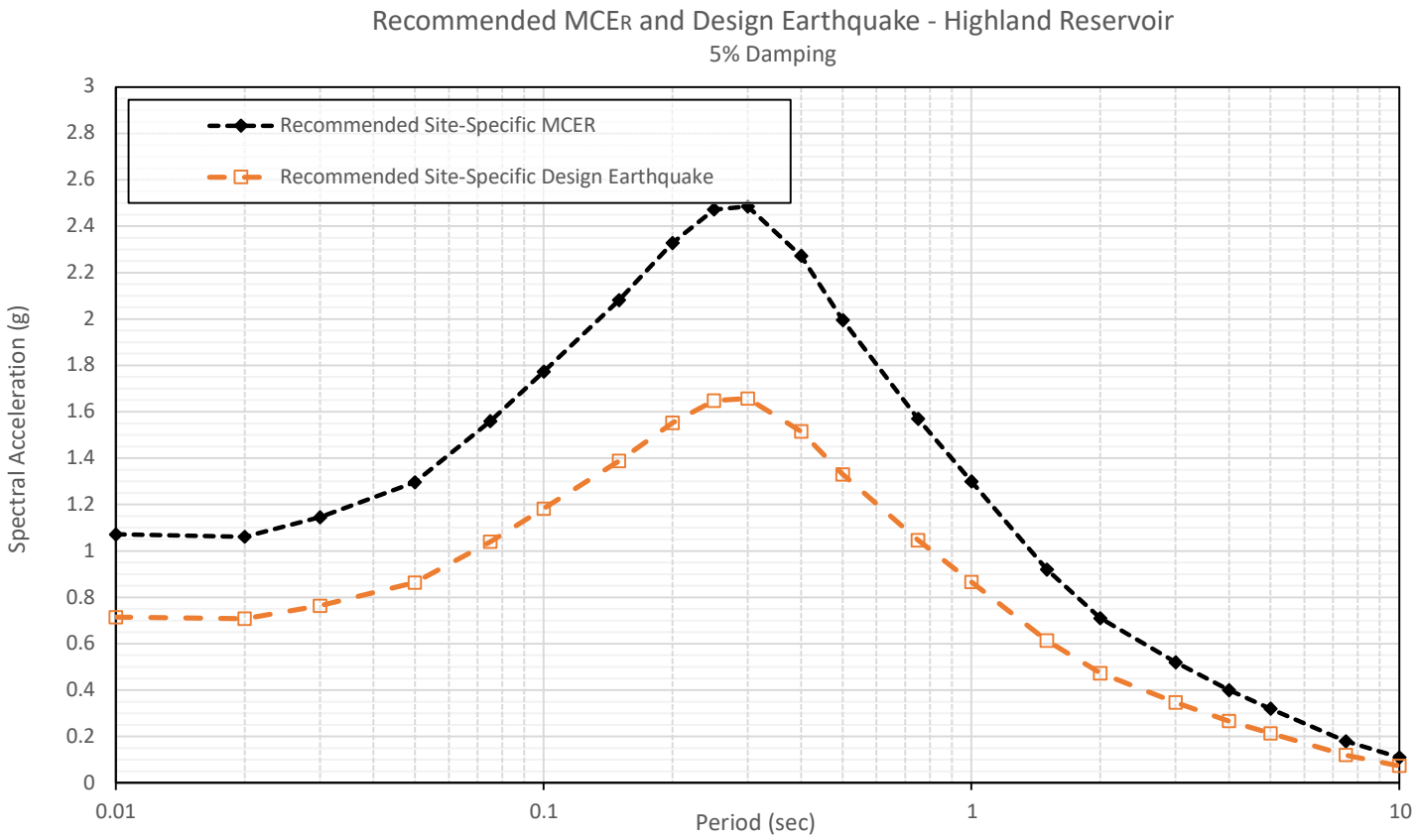

Site-Specific Design Acceleration Parameters (ASCE 7-16 Section 21.4)

S_{DS} = 90% of the peak S_a from T =0.2 to 5 s (not less than 80% of mapped S_{DS})

SD1 = Peak T*Sa between periods of 1 second and 2 seconds (not less than 80% of mapped SD1)

S_{DS} = 1.491 **S_{D1} =** 0.947

PROJECT NAME	FIGURE NAME	GROUP DELTA	
City of Redlands Condition, Seismic, and Structural Assessment of Water Facilities	**Recommended MCE_R and Design Earthquake and Design Acceleration Parameters Highland Reservoir**	PROJECT NUMBER: SD691	FIGURE NUMBER: D-6g

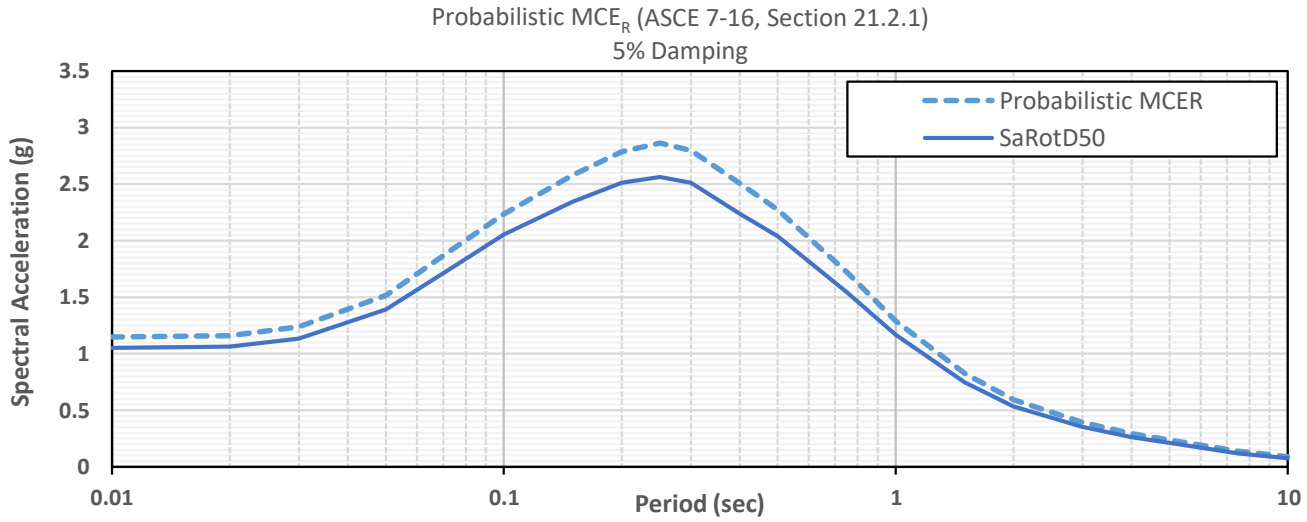

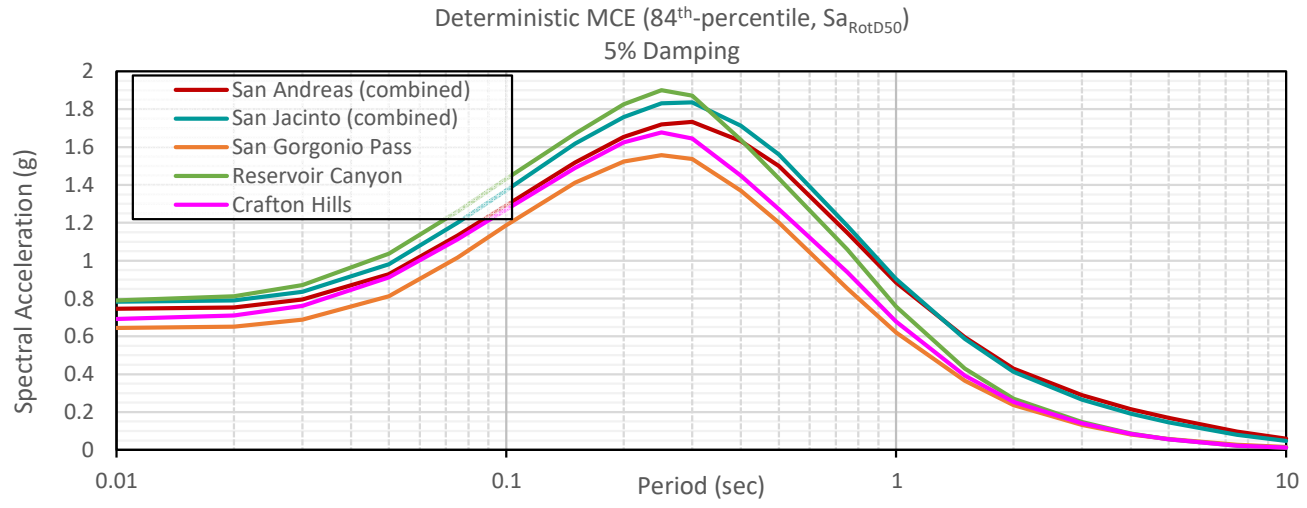

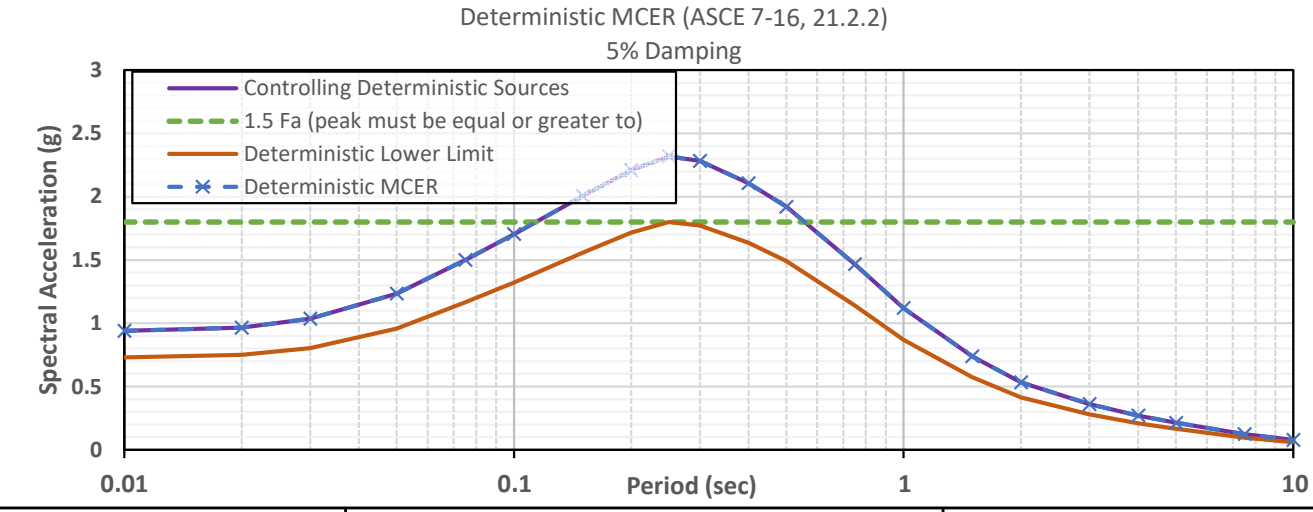

PROJECT NAME	FIGURE NAME		
City of Redlands Condition, Seismic, and Structural Assessment of Water Facilities	**Probabilistic and Deterministic MCE$_R$ Acceleration Response Spectra Margarita Reservoir**	PROJECT NUMBER SD691	FIGURE NUMBER D-4h

GROUP DELTA

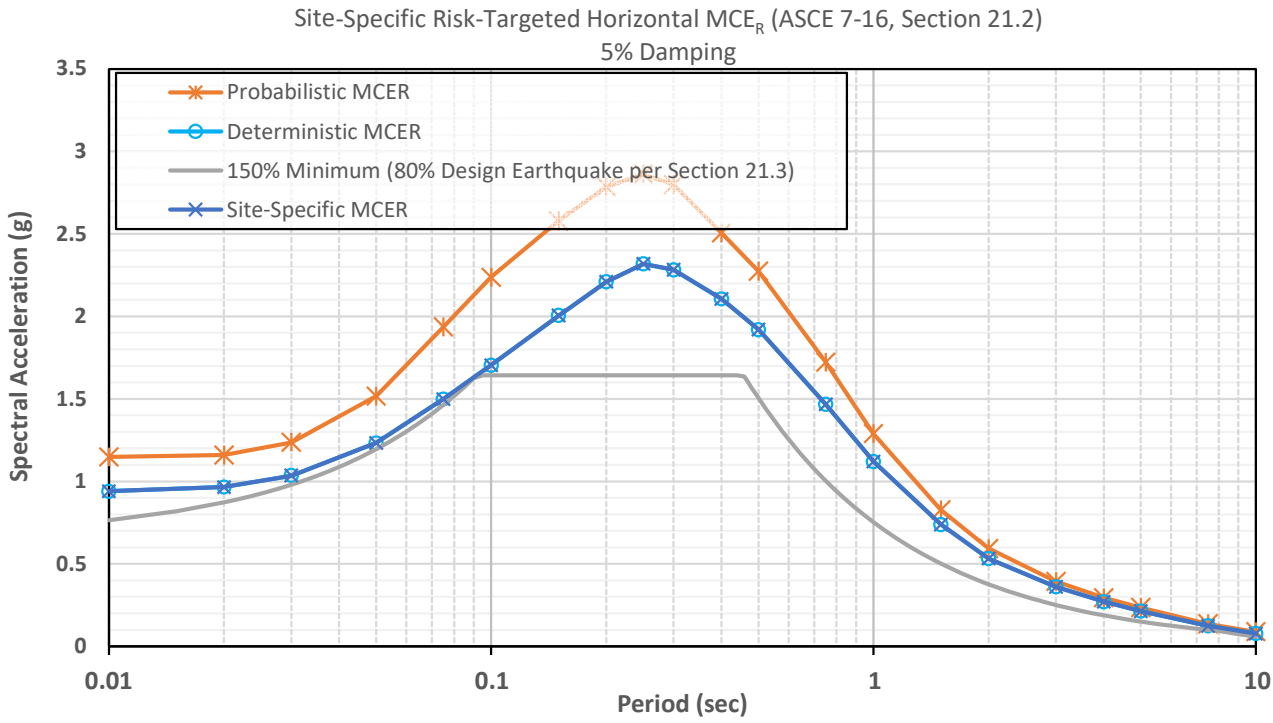

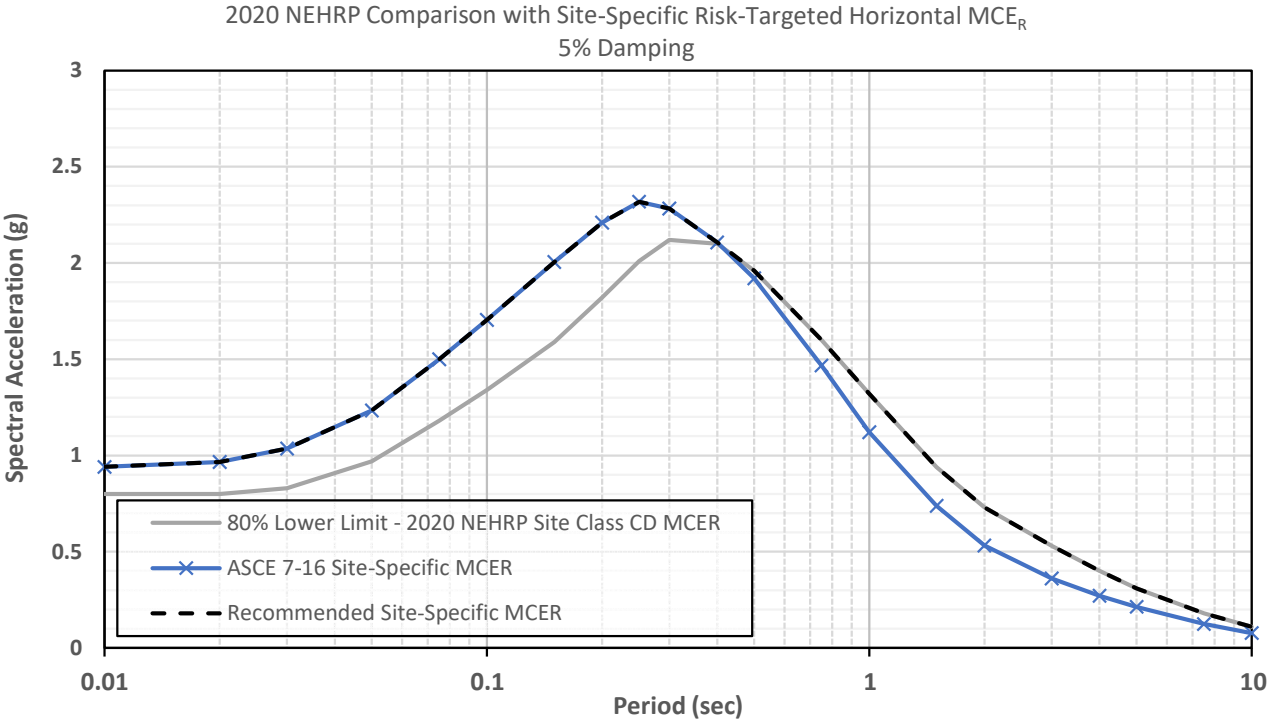

PROJECT NAME	FIGURE NAME		
City of Redlands Condition, Seismic, and Structural Assessment of Water Facilities	**Recommended MCE$_R$ Acceleration Response Spectrum Margarita Reservoir**	PROJECT NUMBER	FIGURE NUMBER
		SD691	D-5h

GROUP DELTA

Recommended MCE_R and Design Earthquake ARS		
Period	Design	MCE_R
(sec)	Sa (g)	Sa (g)
0.01	0.627	0.940
0.02	0.644	0.966
0.03	0.691	1.036
0.05	0.823	1.234
0.075	1.000	1.500
0.1	1.136	1.704
0.15	1.337	2.005
0.2	1.473	2.210
0.25	1.546	2.319
0.3	1.522	2.283
0.4	1.404	2.107
0.5	1.307	1.960
0.75	1.067	1.600
1	0.880	1.320
1.5	0.627	0.940
2	0.487	0.730
3	0.353	0.530
4	0.267	0.400
5	0.207	0.310
7.5	0.120	0.180
10	0.073	0.110

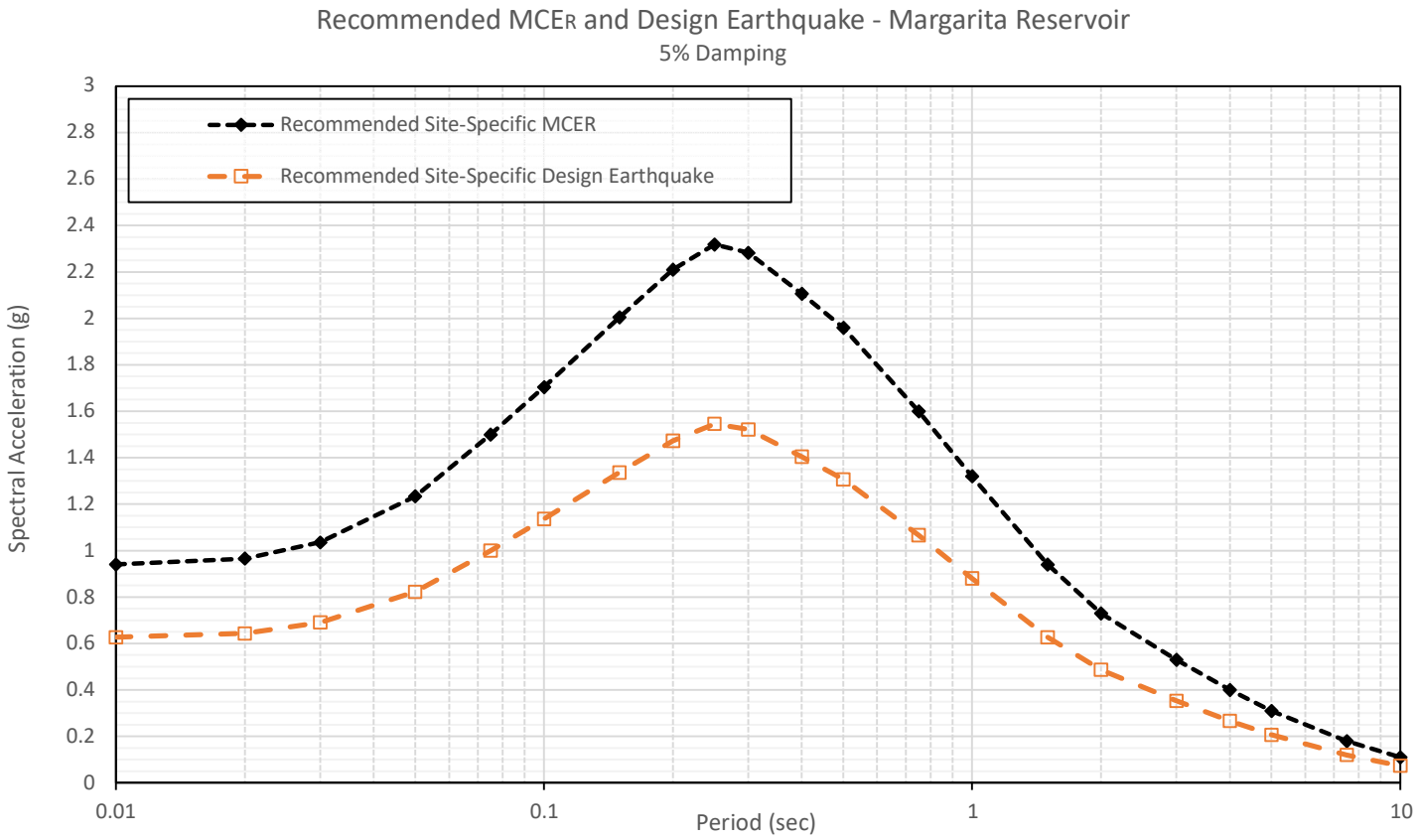

Site-Specific Design Acceleration Parameters (ASCE 7-16 Section 21.4)

S_{DS} = 90% of the peak S_a from T =0.2 to 5 s (not less than 80% of mapped S_{DS})

SD1 = Peak T*Sa between periods of 1 second and 2 seconds (not less than 80% of mapped SD1)

S_{DS} = 1.391 **S_{D1} =** 0.973

PROJECT NAME	FIGURE NAME	GROUP DELTA	
City of Redlands Condition, Seismic, and Structural Assessment of Water Facilities	**Recommended MCE_R and Design Earthquake and Design Acceleration Parameters Margarita Reservoir**	PROJECT NUMBER: SD691	FIGURE NUMBER: D-6h

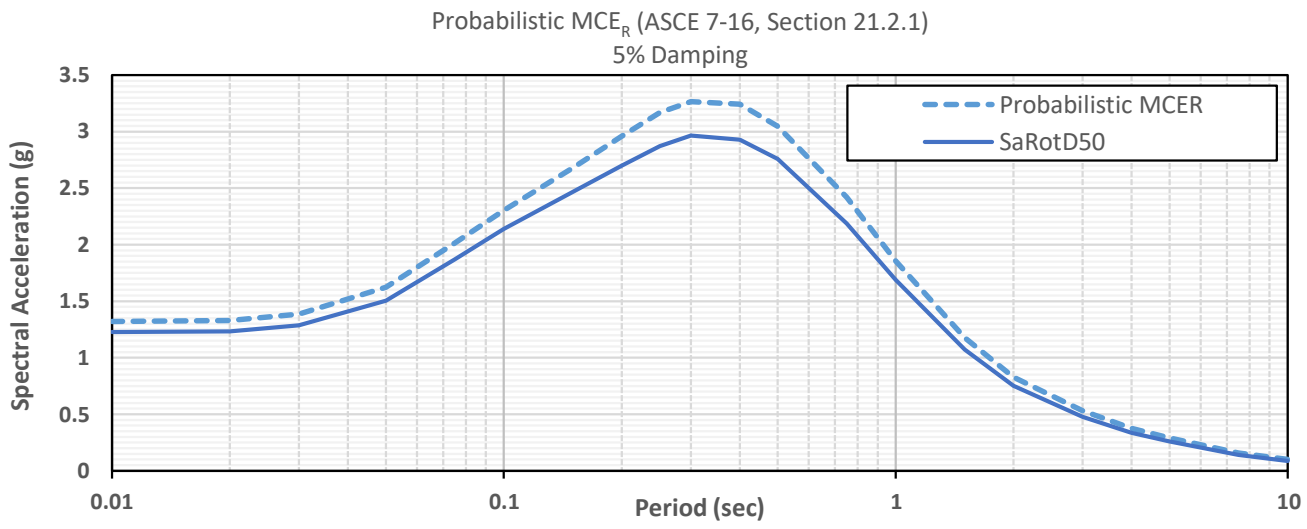

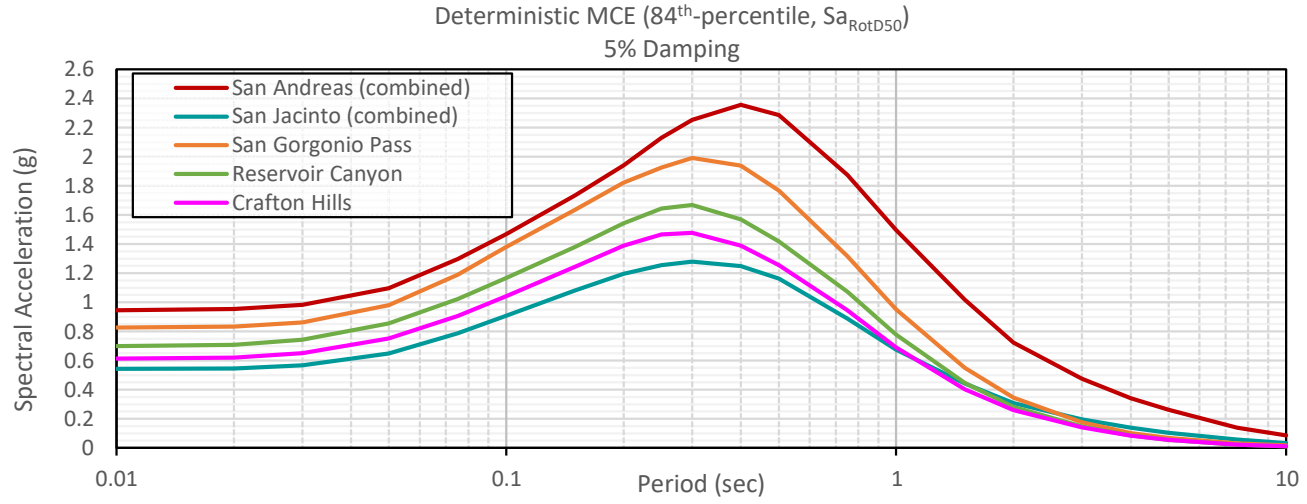

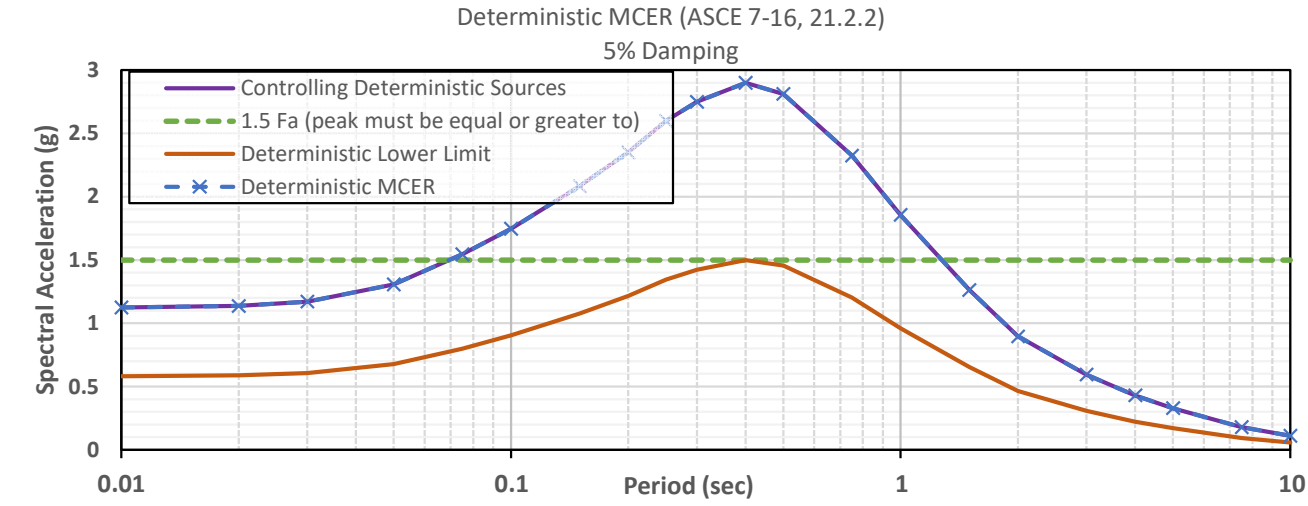

PROJECT NAME	FIGURE NAME		
City of Redlands Condition, Seismic, and Structural Assessment of Water Facilities	**Probabilistic and Deterministic MCE$_R$ Acceleration Response Spectra Mill Creek 1 & 2 Reservoirs**	PROJECT NUMBER SD691	FIGURE NUMBER D-4i

GROUP DELTA

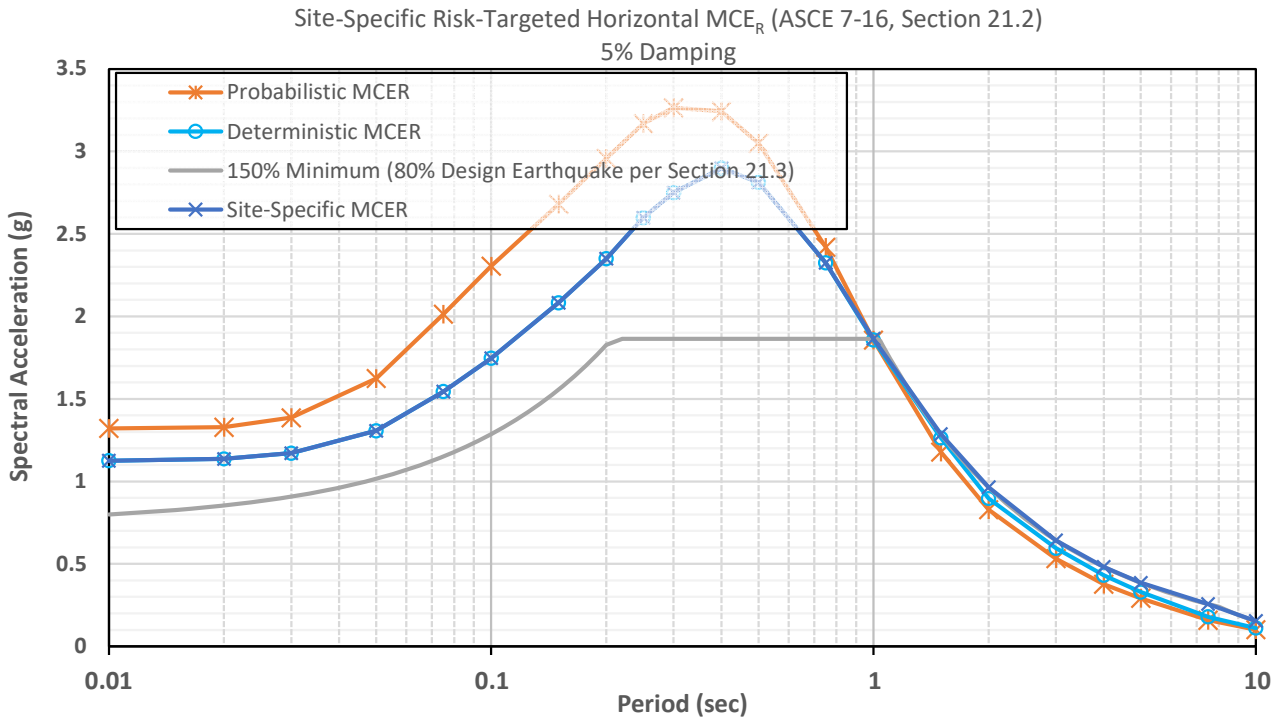

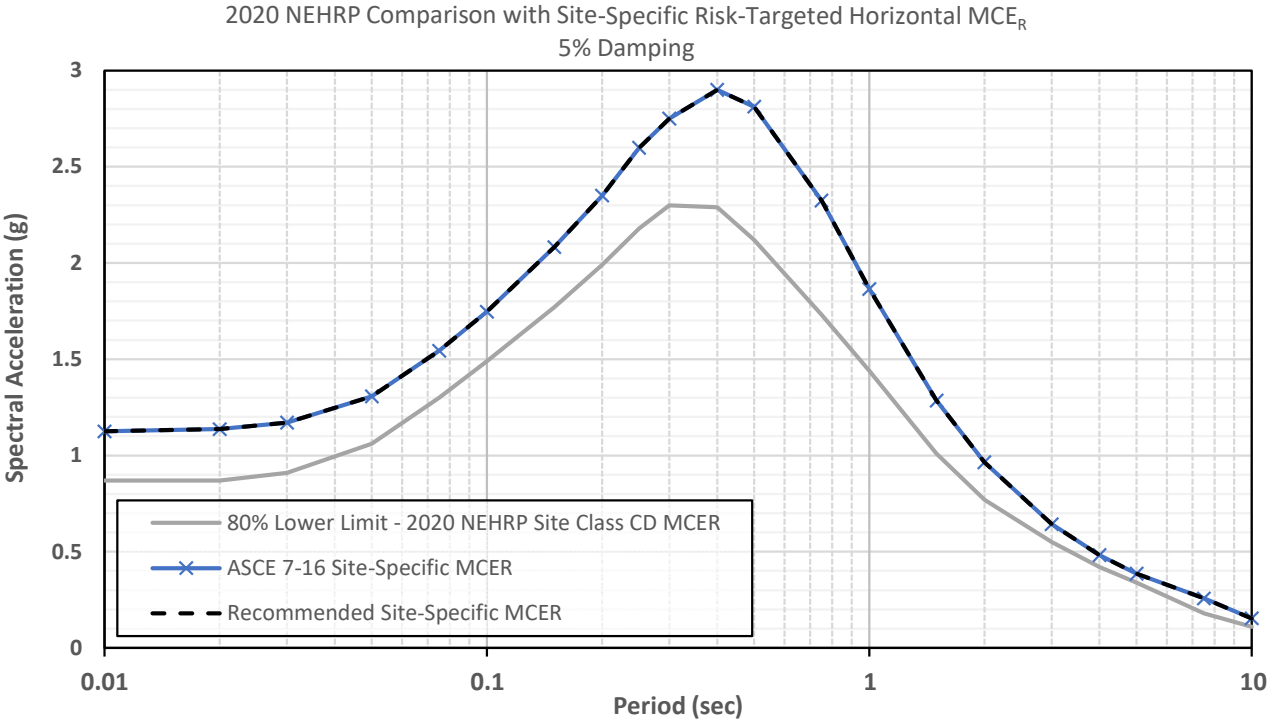

PROJECT NAME	FIGURE NAME		
City of Redlands Condition, Seismic, and Structural Assessment of Water Facilities	**Recommended MCE$_R$ Acceleration Response Spectrum Mill Creek 1 & 2 Reservoirs**	PROJECT NUMBER: SD691	FIGURE NUMBER: D-5i

GROUP DELTA

Recommended MCE_R and Design Earthquake ARS		
Period	Design	MCE_R
(sec)	Sa (g)	Sa (g)
0.01	0.750	1.125
0.02	0.758	1.136
0.03	0.781	1.171
0.05	0.871	1.307
0.075	1.029	1.544
0.1	1.164	1.747
0.15	1.388	2.082
0.2	1.566	2.350
0.25	1.732	2.598
0.3	1.833	2.749
0.4	1.933	2.899
0.5	1.875	2.812
0.75	1.549	2.324
1	1.243	1.865
1.5	0.857	1.286
2	0.643	0.964
3	0.429	0.643
4	0.321	0.482
5	0.257	0.386
7.5	0.171	0.257
10	0.103	0.154

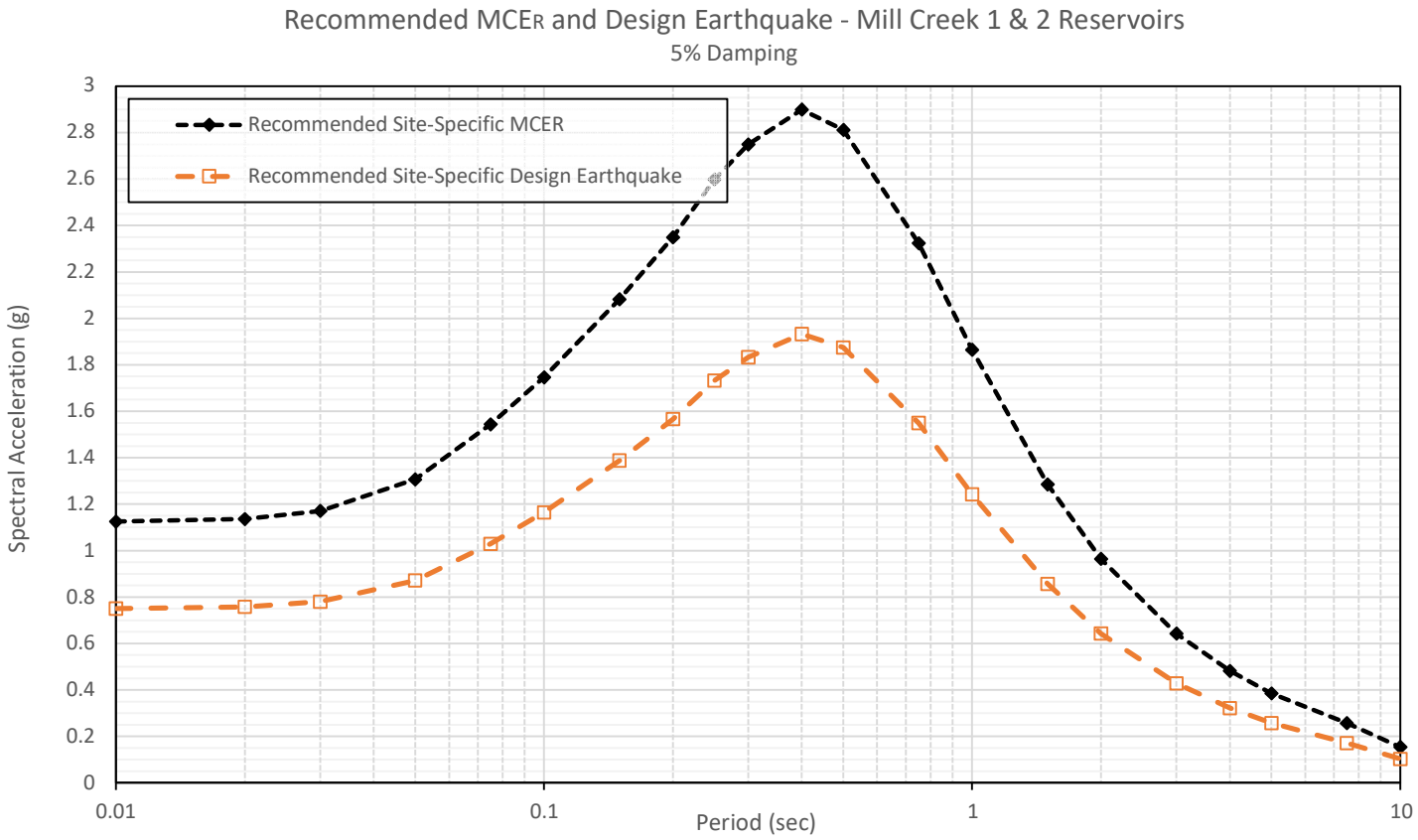

Site-Specific Design Acceleration Parameters (ASCE 7-16 Section 21.4)

S_{DS} = 90% of the peak S_a from T =0.2 to 5 s (not less than 80% of mapped S_{DS})

SD1 = Peak T*Sa between periods of 1 second and 5 seconds (not less than 80% of mapped SD1)

S_{DS} = 1.739 S_{D1} = 1.286

PROJECT NAME	FIGURE NAME	GROUP DELTA	
City of Redlands Condition, Seismic, and Structural Assessment of Water Facilities	**Recommended MCE_R and Design Earthquake and Design Acceleration Parameters Mill Creek 1 & 2 Reservoirs**	PROJECT NUMBER SD691	FIGURE NUMBER D-6i

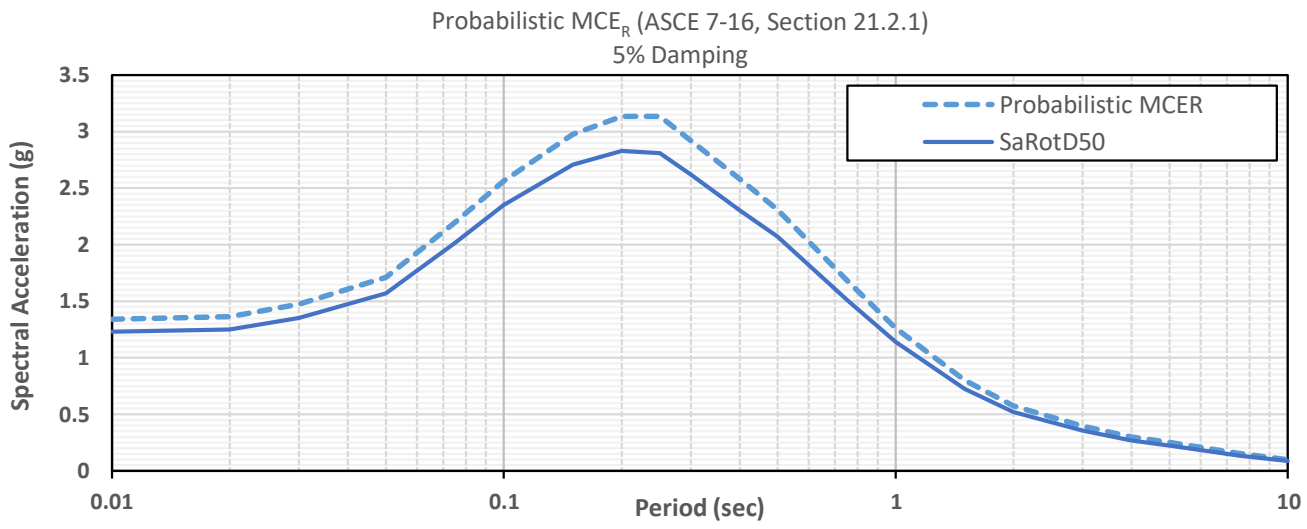

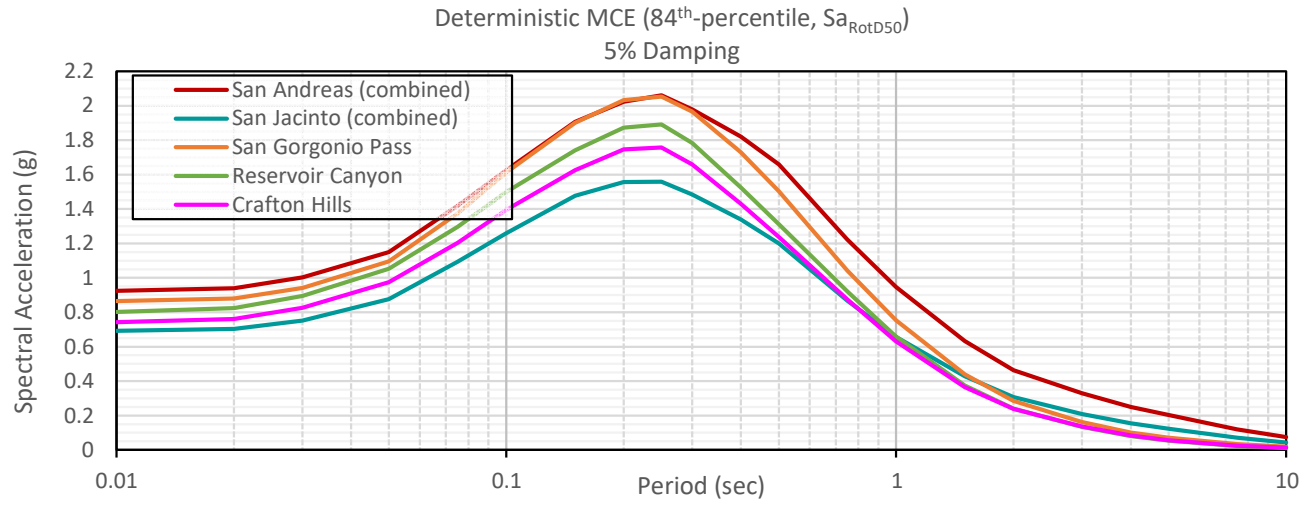

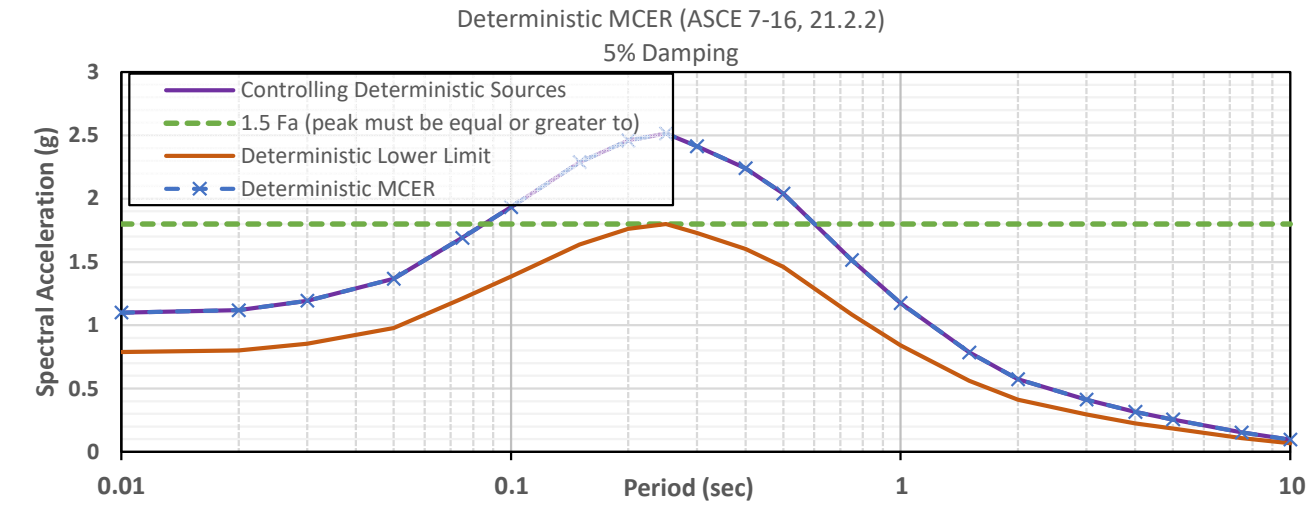

PROJECT NAME	FIGURE NAME		
City of Redlands Condition, Seismic, and Structural Assessment of Water Facilities	**Probabilistic and Deterministic MCE$_R$ Acceleration Response Spectra Sand Canyon Reservoir**	PROJECT NUMBER SD691	FIGURE NUMBER D-4j

GROUP DELTA

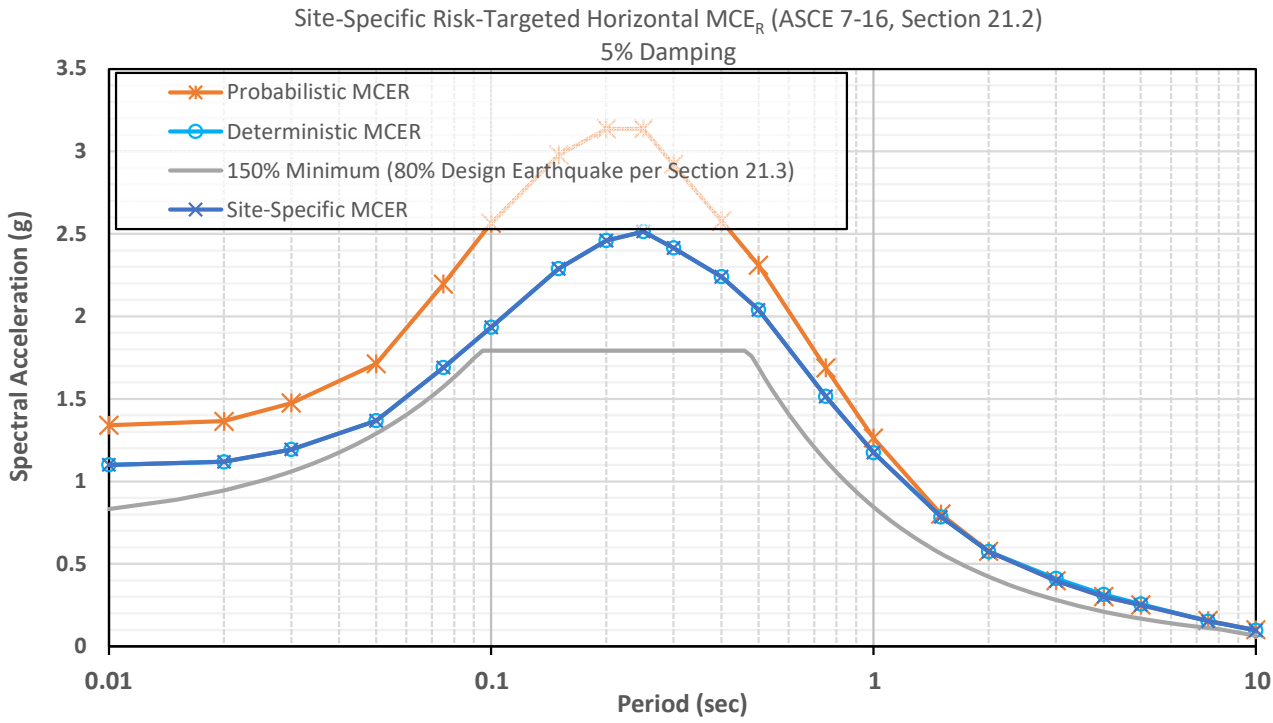

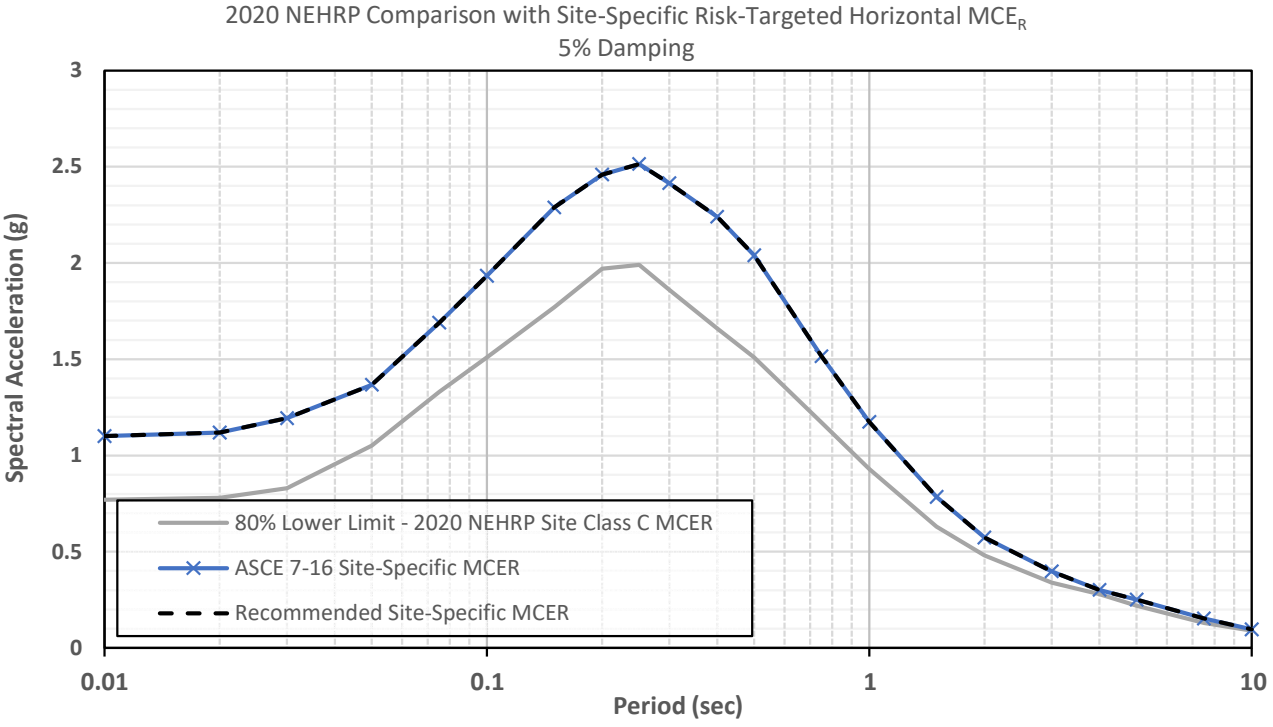

PROJECT NAME	FIGURE NAME		
City of Redlands Condition, Seismic, and Structural Assessment of Water Facilities	**Recommended MCE$_R$ Acceleration Response Spectrum Sand Canyon Reservoir**	PROJECT NUMBER	FIGURE NUMBER
		SD691	D-5j

GROUP DELTA

Recommended MCE_R and Design Earthquake ARS		
Period	Design	MCE_R
(sec)	Sa (g)	Sa (g)
0.01	0.734	1.100
0.02	0.746	1.119
0.03	0.796	1.194
0.05	0.911	1.367
0.075	1.127	1.690
0.1	1.289	1.934
0.15	1.526	2.288
0.2	1.640	2.459
0.25	1.676	2.514
0.3	1.610	2.414
0.4	1.493	2.240
0.5	1.360	2.040
0.75	1.010	1.515
1	0.783	1.175
1.5	0.523	0.785
2	0.383	0.574
3	0.265	0.398
4	0.201	0.302
5	0.168	0.251
7.5	0.102	0.153
10	0.065	0.097

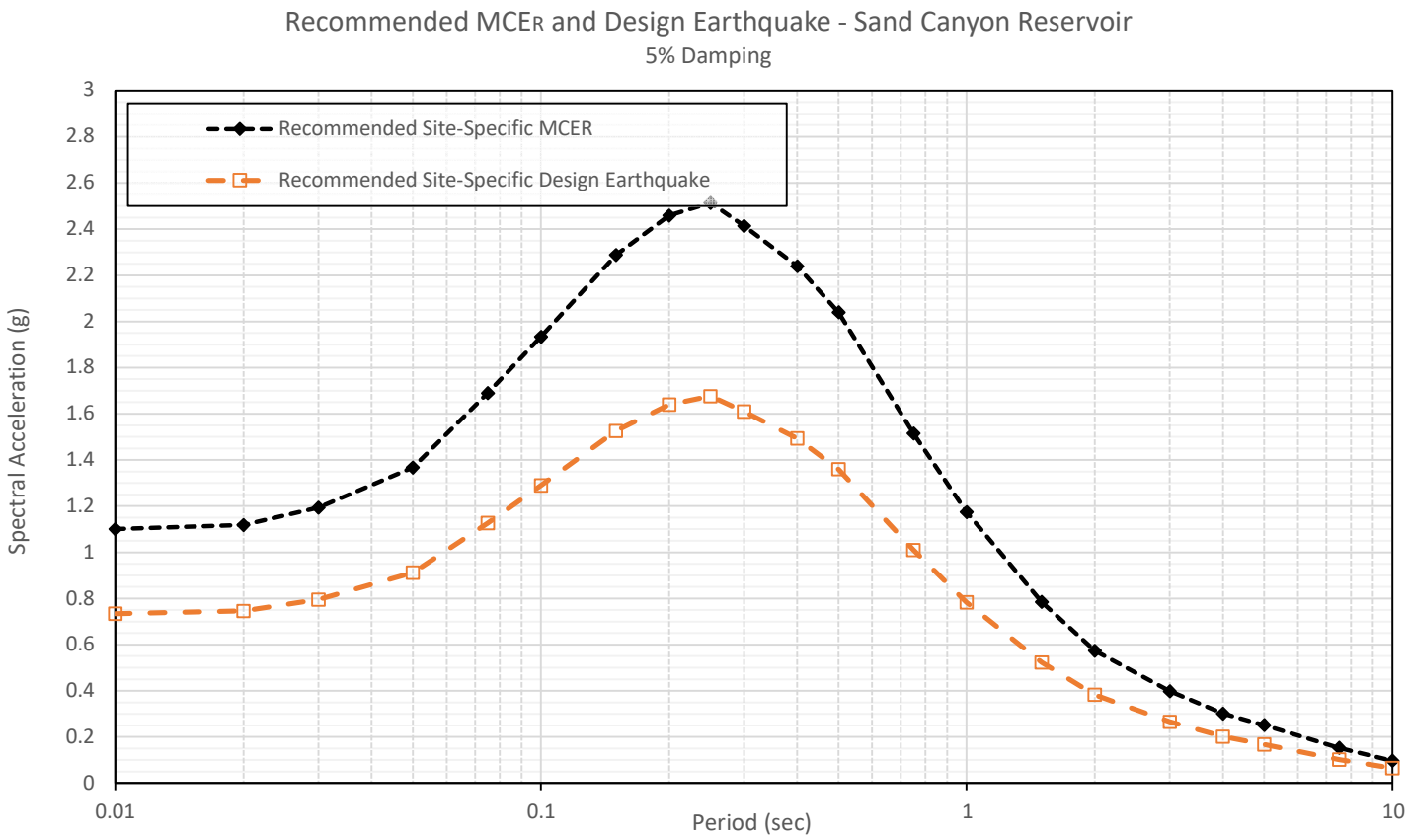

Site-Specific Design Acceleration Parameters (ASCE 7-16 Section 21.4)

S_{DS} = 90% of the peak S_a from T =0.2 to 5 s (not less than 80% of mapped S_{DS})

SD1 = Peak T*Sa between periods of 1 second and 2 seconds (not less than 80% of mapped SD1)

S_{DS} = 1.509 **S_{D1} =** 0.785

PROJECT NAME	FIGURE NAME	GROUP DELTA	
City of Redlands Condition, Seismic, and Structural Assessment of Water Facilities	**Recommended MCE_R and Design Earthquake and Design Acceleration Parameters Sand Canyon Reservoir**	PROJECT NUMBER SD691	FIGURE NUMBER D-6j

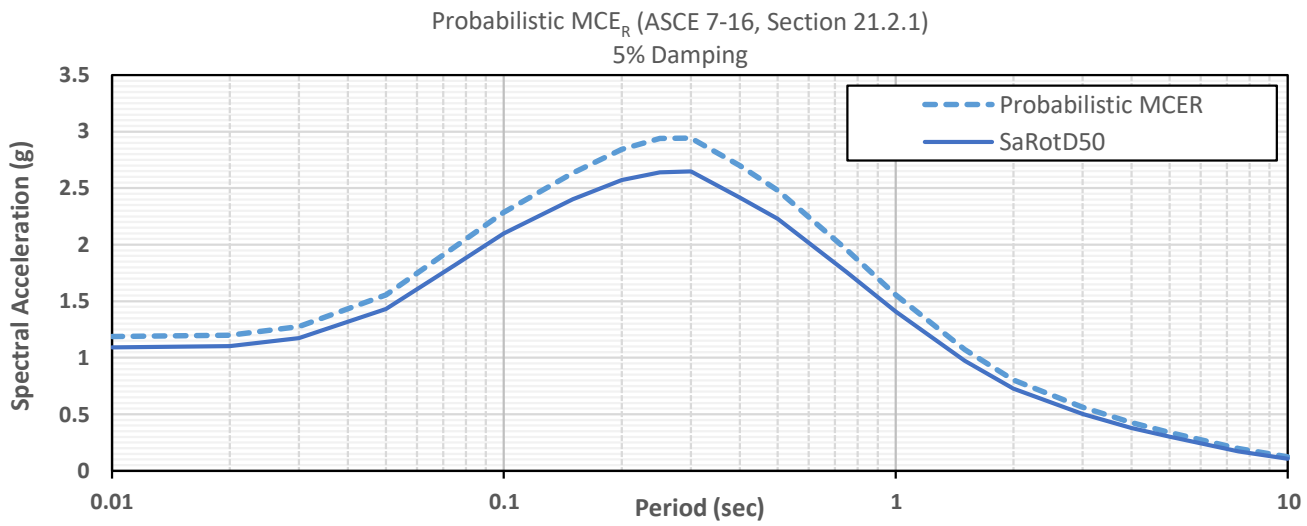

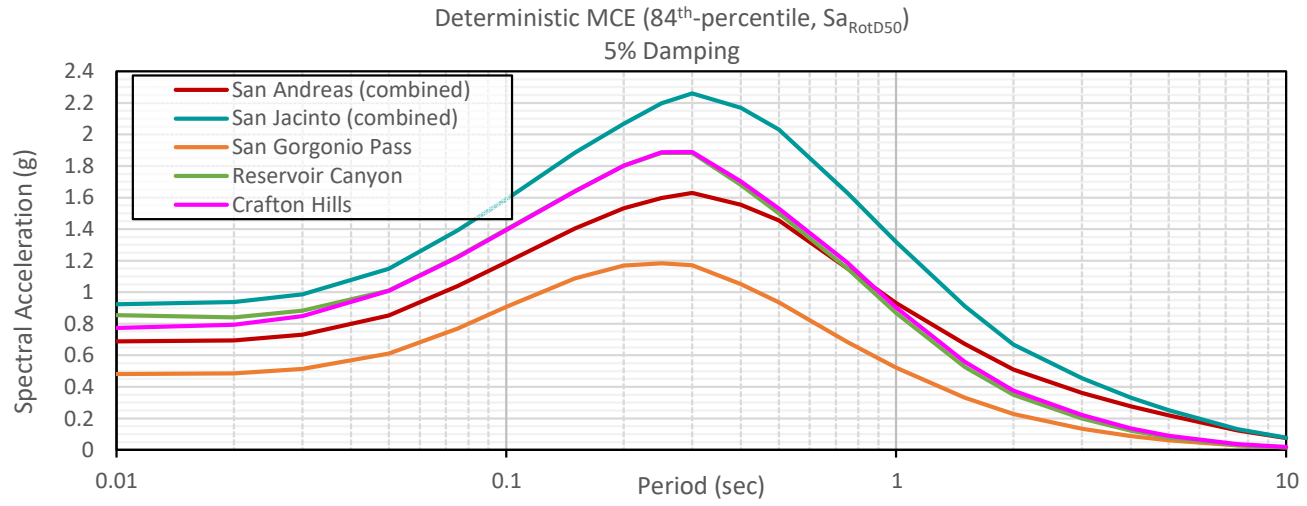

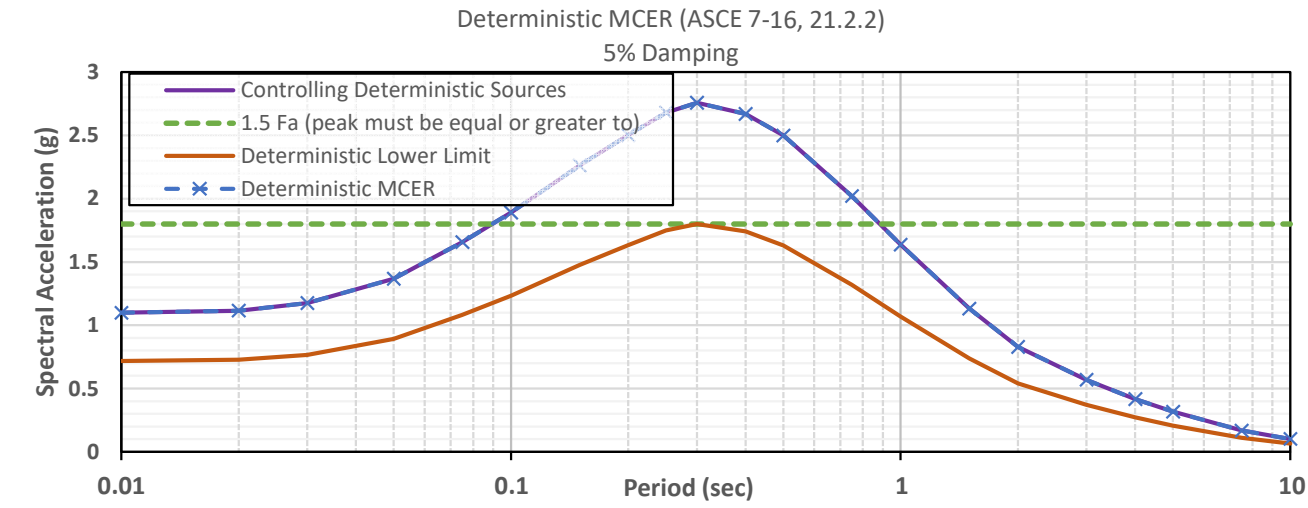

PROJECT NAME	FIGURE NAME		
City of Redlands Condition, Seismic, and Structural Assessment of Water Facilities	**Probabilistic and Deterministic MCE$_R$ Acceleration Response Spectra Smiley Reservoir**	PROJECT NUMBER SD691	FIGURE NUMBER D-4k

GROUP DELTA

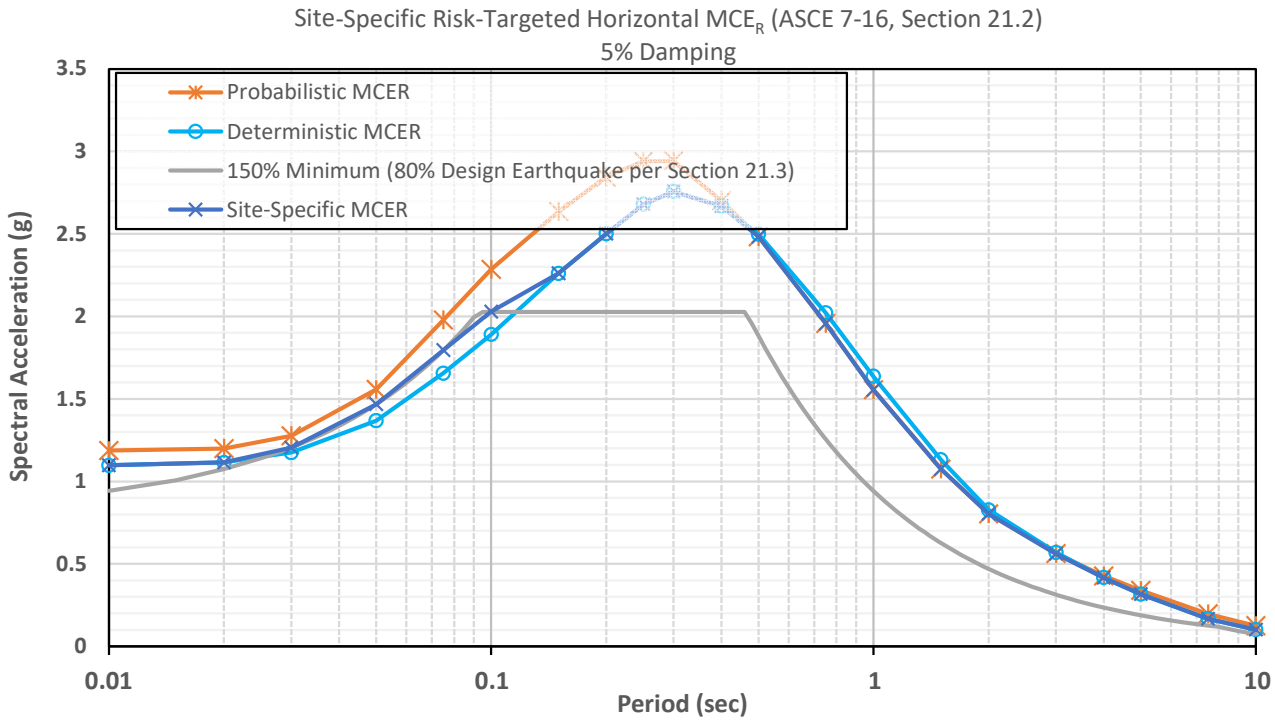

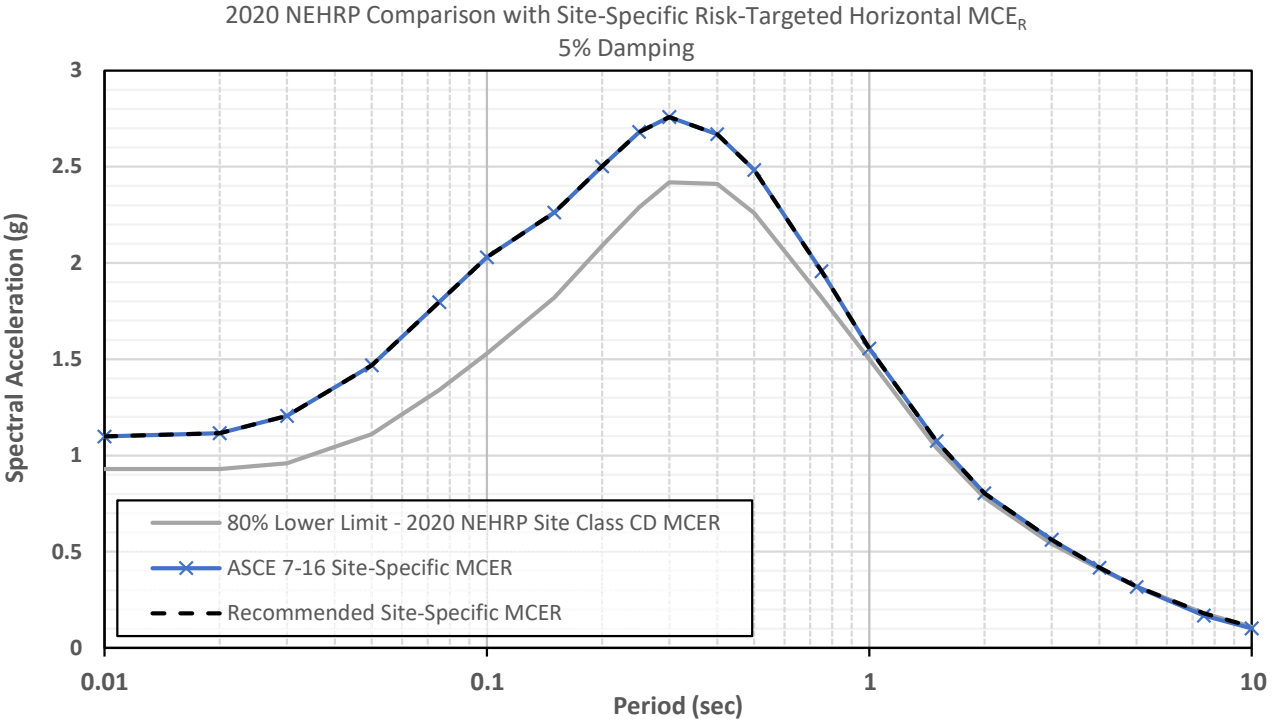

PROJECT NAME	FIGURE NAME		
City of Redlands Condition, Seismic, and Structural Assessment of Water Facilities	**Recommended MCE$_R$ Acceleration Response Spectrum Smiley Reservoir**	PROJECT NUMBER	FIGURE NUMBER
		SD691	D-5k

GROUP DELTA

Recommended MCE_R and Design Earthquake ARS		
Period	Design	MCE_R
(sec)	Sa (g)	Sa (g)
0.01	0.732	1.098
0.02	0.744	1.115
0.03	0.804	1.206
0.05	0.979	1.468
0.075	1.198	1.796
0.1	1.353	2.029
0.15	1.508	2.262
0.2	1.668	2.502
0.25	1.787	2.680
0.3	1.839	2.758
0.4	1.779	2.669
0.5	1.655	2.483
0.75	1.305	1.957
1	1.037	1.556
1.5	0.716	1.075
2	0.536	0.804
3	0.375	0.562
4	0.278	0.417
5	0.213	0.320
7.5	0.120	0.180
10	0.073	0.110

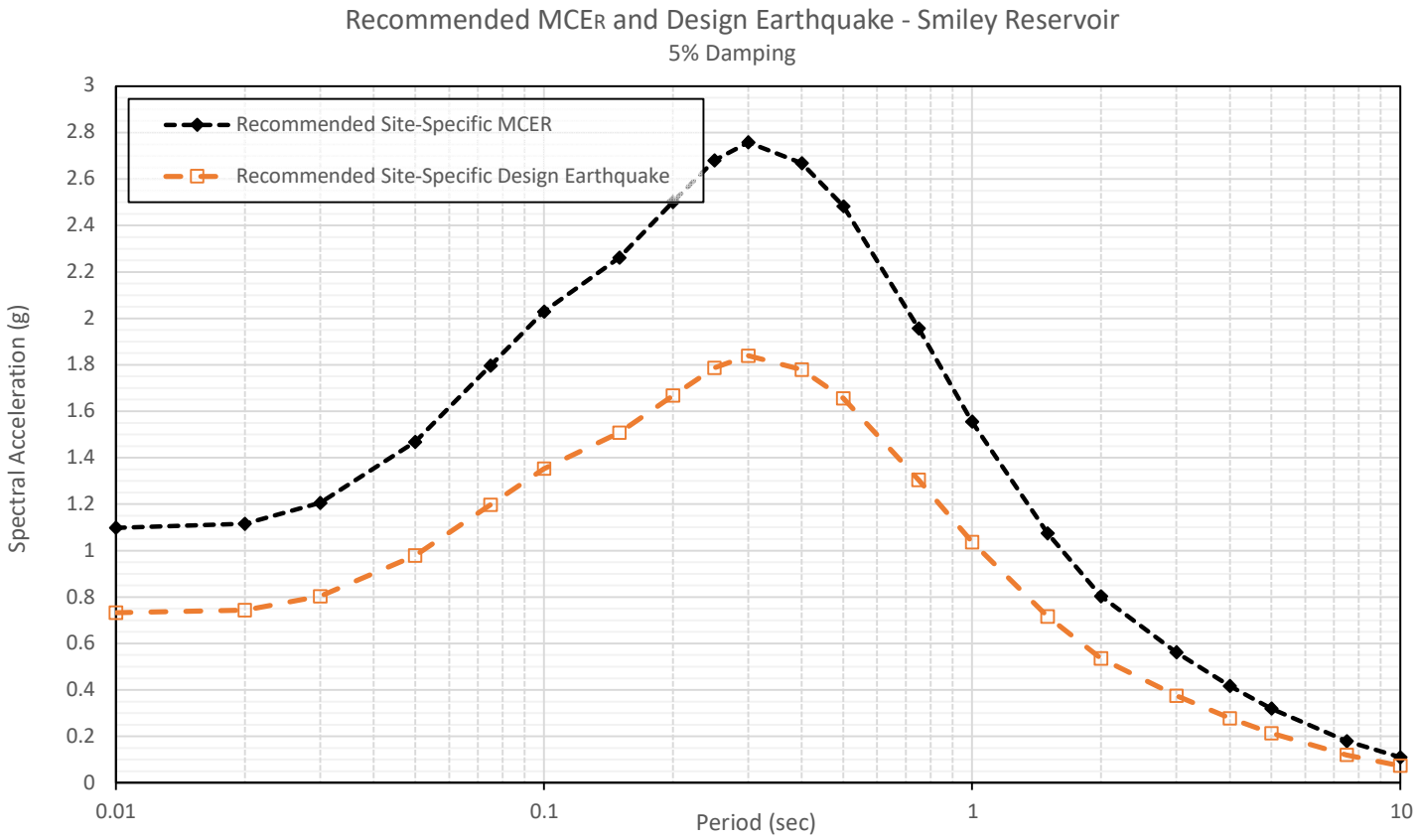

Site-Specific Design Acceleration Parameters (ASCE 7-16 Section 21.4)

S_{DS} = 90% of the peak S_a from T =0.2 to 5 s (not less than 80% of mapped S_{DS})

SD1 = Peak T*Sa between periods of 1 second and 2 seconds (not less than 80% of mapped SD1)

S_{DS} = 1.655 **S_{D1} =** 1.075

PROJECT NAME	FIGURE NAME	GROUP DELTA	
City of Redlands Condition, Seismic, and Structural Assessment of Water Facilities	**Recommended MCE_R and Design Earthquake and Design Acceleration Parameters Smiley Reservoir**	PROJECT NUMBER SD691	FIGURE NUMBER D-6k

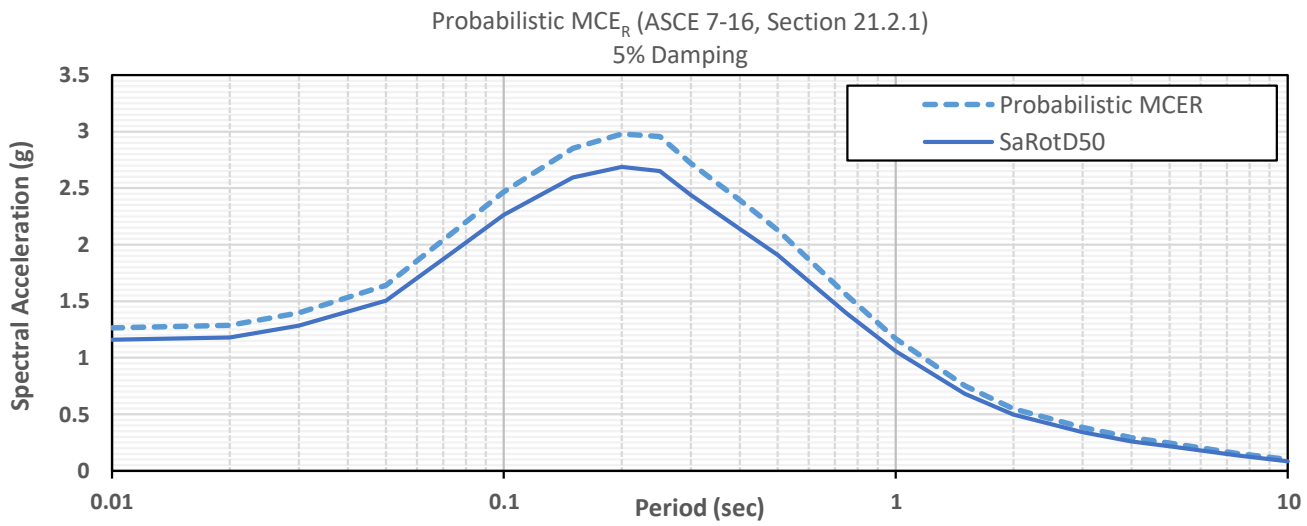

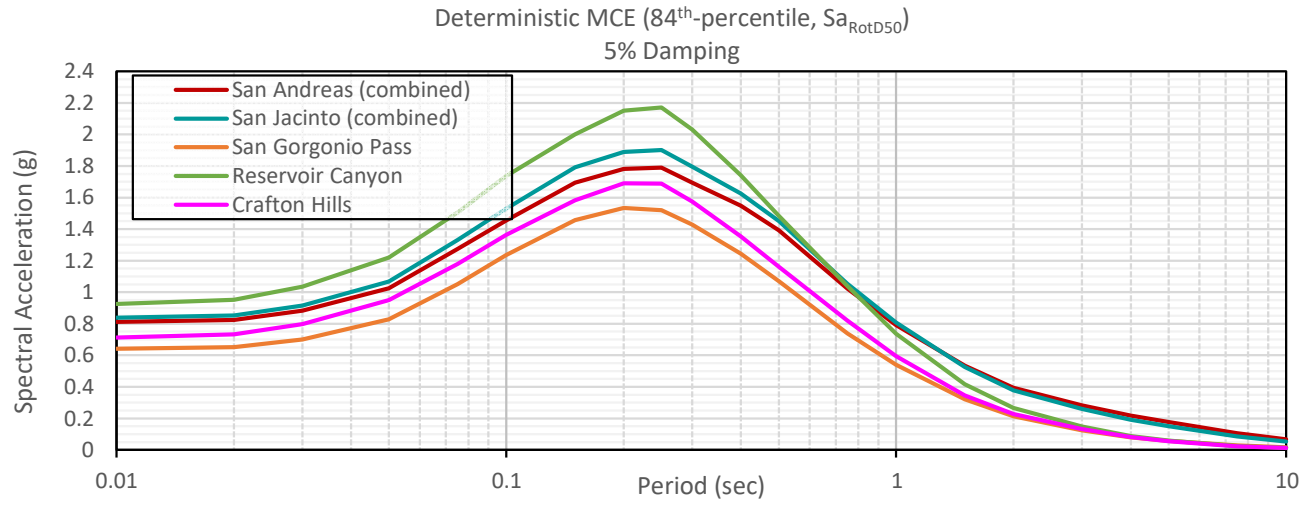

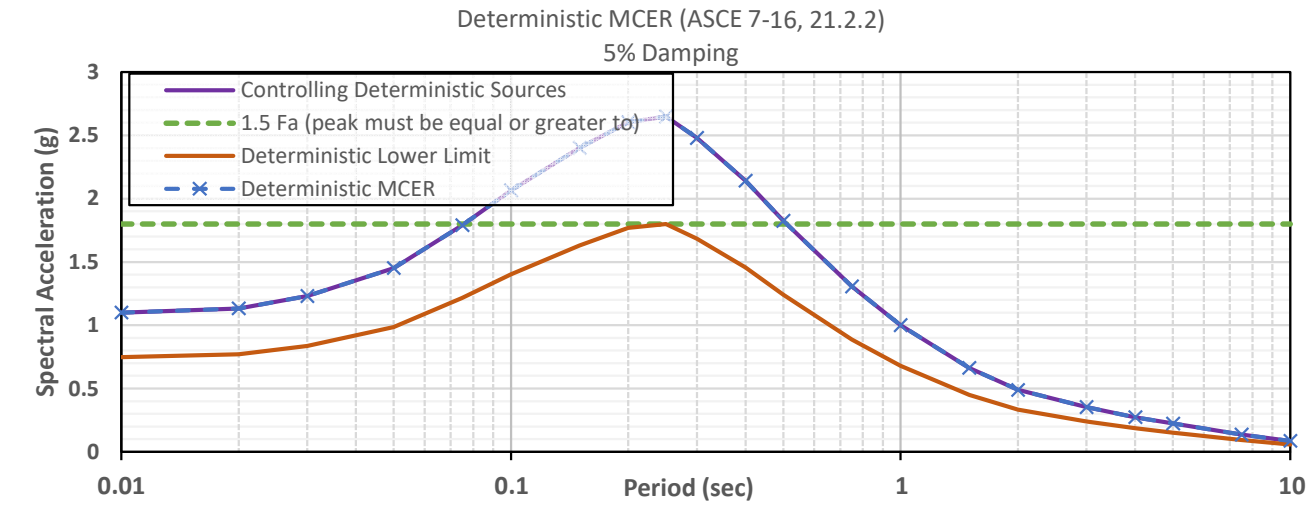

PROJECT NAME	FIGURE NAME		
City of Redlands Condition, Seismic, and Structural Assessment of Water Facilities	**Probabilistic and Deterministic MCE$_R$ Acceleration Response Spectra South Reservoir**	PROJECT NUMBER SD691	FIGURE NUMBER D-4l

GROUP DELTA

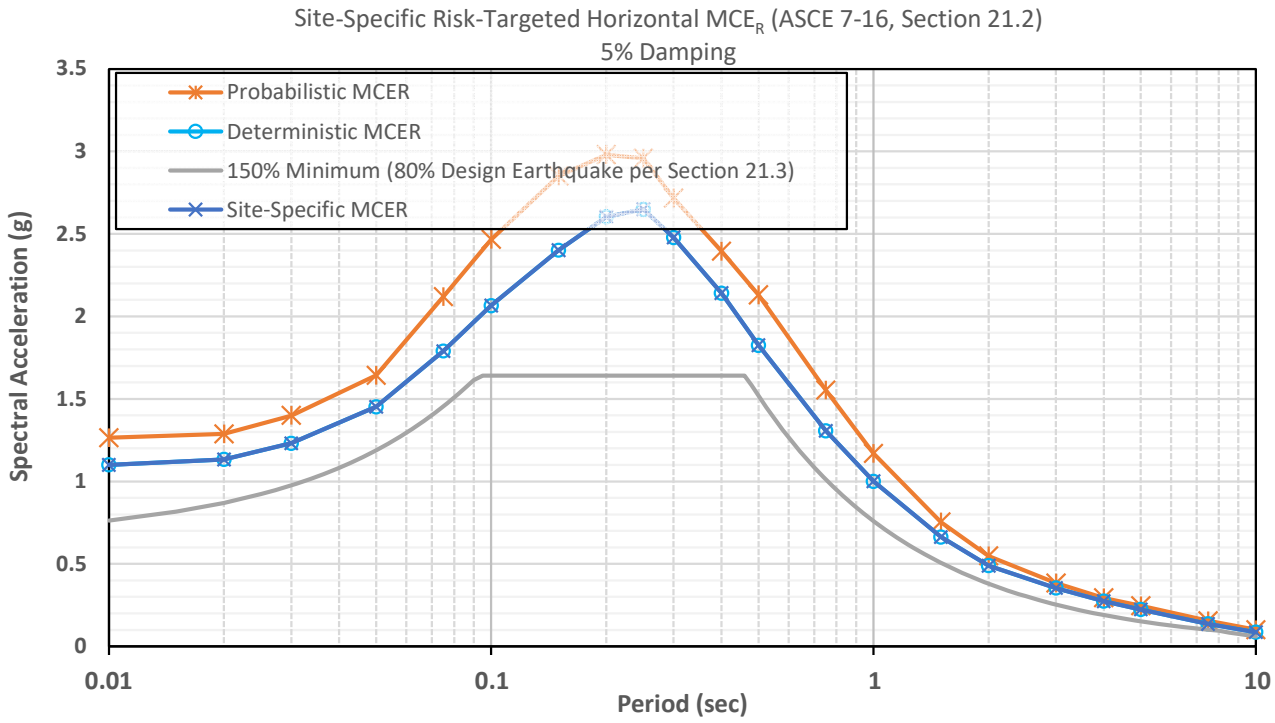

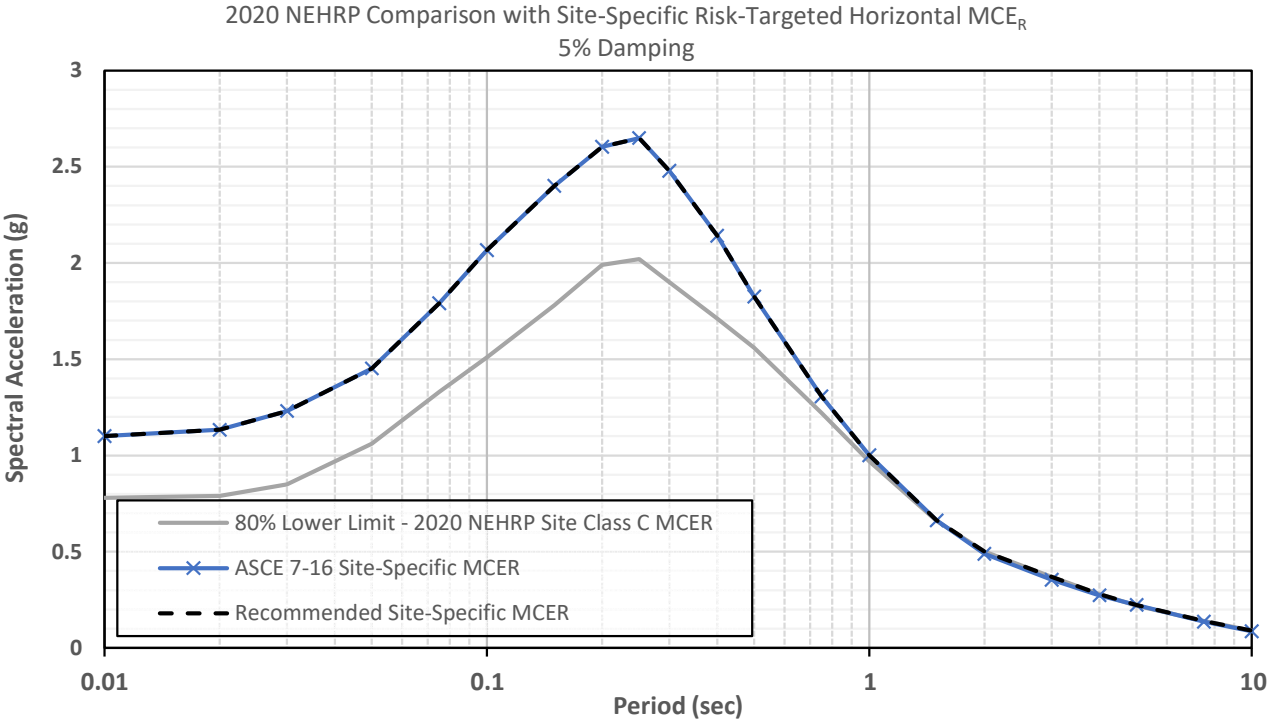

PROJECT NAME	FIGURE NAME		
City of Redlands Condition, Seismic, and Structural Assessment of Water Facilities	**Recommended MCE$_R$ Acceleration Response Spectrum South Reservoir**	PROJECT NUMBER	FIGURE NUMBER
		SD691	D-5l

GROUP DELTA

Recommended MCE_R and Design Earthquake ARS		
Period	Design	MCE_R
(sec)	Sa (g)	Sa (g)
0.01	0.734	1.100
0.02	0.755	1.133
0.03	0.821	1.231
0.05	0.968	1.452
0.075	1.194	1.791
0.1	1.377	2.066
0.15	1.601	2.401
0.2	1.736	2.604
0.25	1.766	2.650
0.3	1.653	2.479
0.4	1.428	2.142
0.5	1.217	1.825
0.75	0.871	1.307
1	0.667	1.001
1.5	0.442	0.663
2	0.333	0.500
3	0.247	0.370
4	0.187	0.280
5	0.149	0.224
7.5	0.093	0.140
10	0.060	0.090

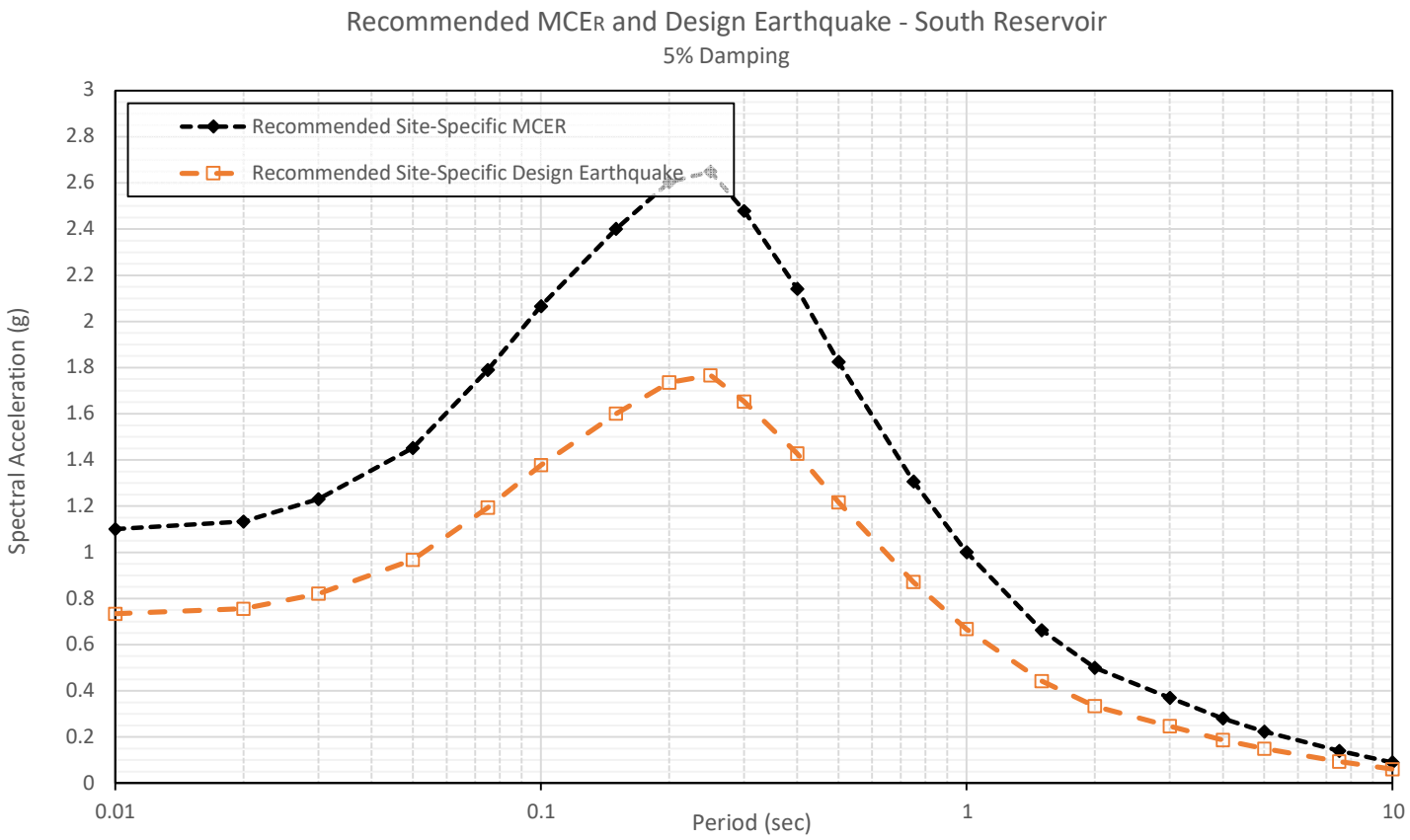

Site-Specific Design Acceleration Parameters (ASCE 7-16 Section 21.4)

S_{DS} = 90% of the peak S_a from T =0.2 to 5 s (not less than 80% of mapped S_{DS})

SD1 = Peak T*Sa between periods of 1 second and 2 seconds (not less than 80% of mapped SD1)

S_{DS} = 1.590 **S_{D1} =** 0.667

PROJECT NAME	FIGURE NAME	GROUP DELTA	
City of Redlands Condition, Seismic, and Structural Assessment of Water Facilities	**Recommended MCE_R and Design Earthquake and Design Acceleration Parameters South Reservoir**	PROJECT NUMBER: SD691	FIGURE NUMBER: D-6l

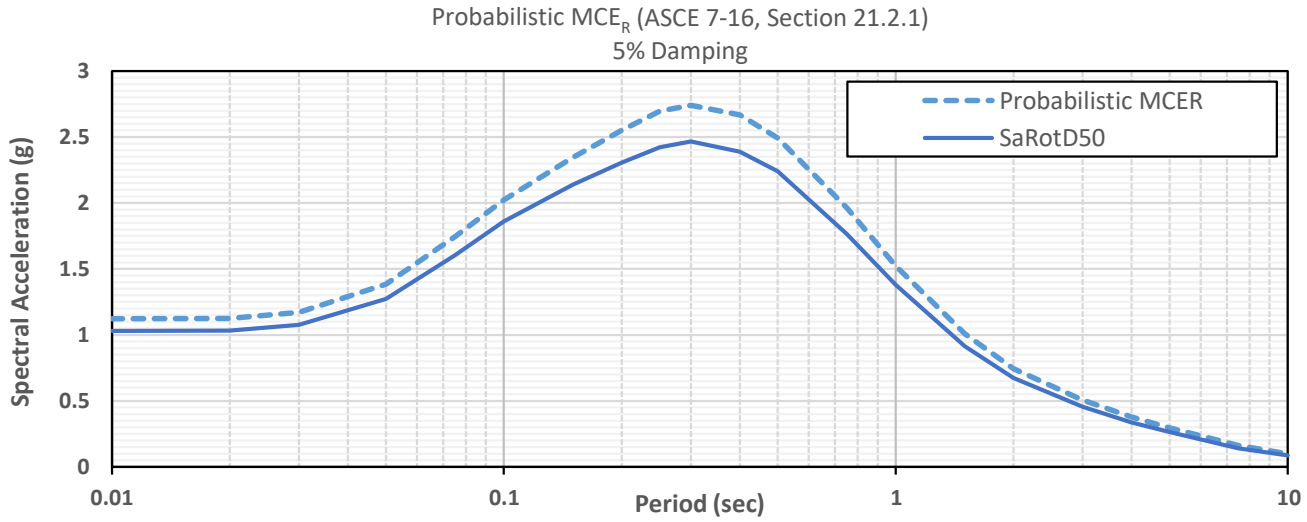

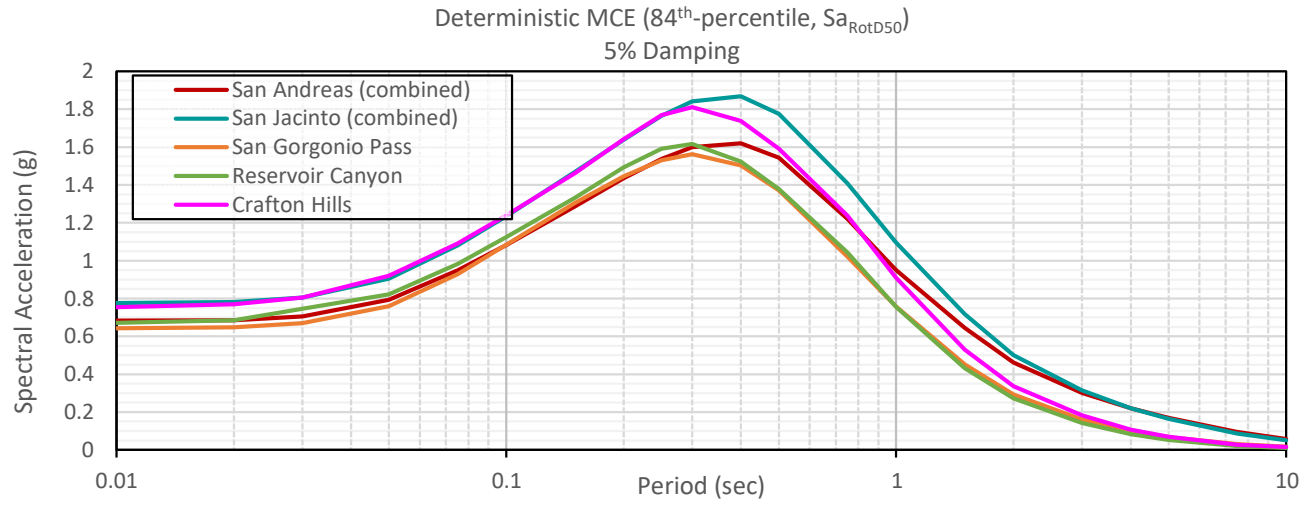

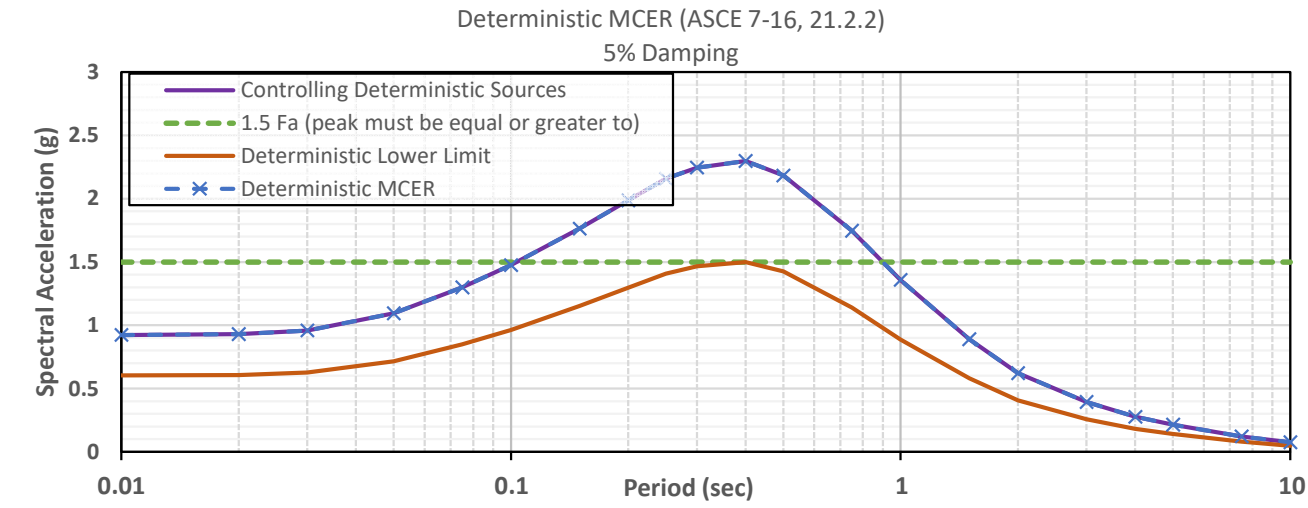

PROJECT NAME	FIGURE NAME		
City of Redlands Condition, Seismic, and Structural Assessment of Water Facilities	**Probabilistic and Deterministic MCE$_R$ Acceleration Response Spectra Sunset Reservoir**	PROJECT NUMBER SD691	FIGURE NUMBER D-4m

GROUP DELTA

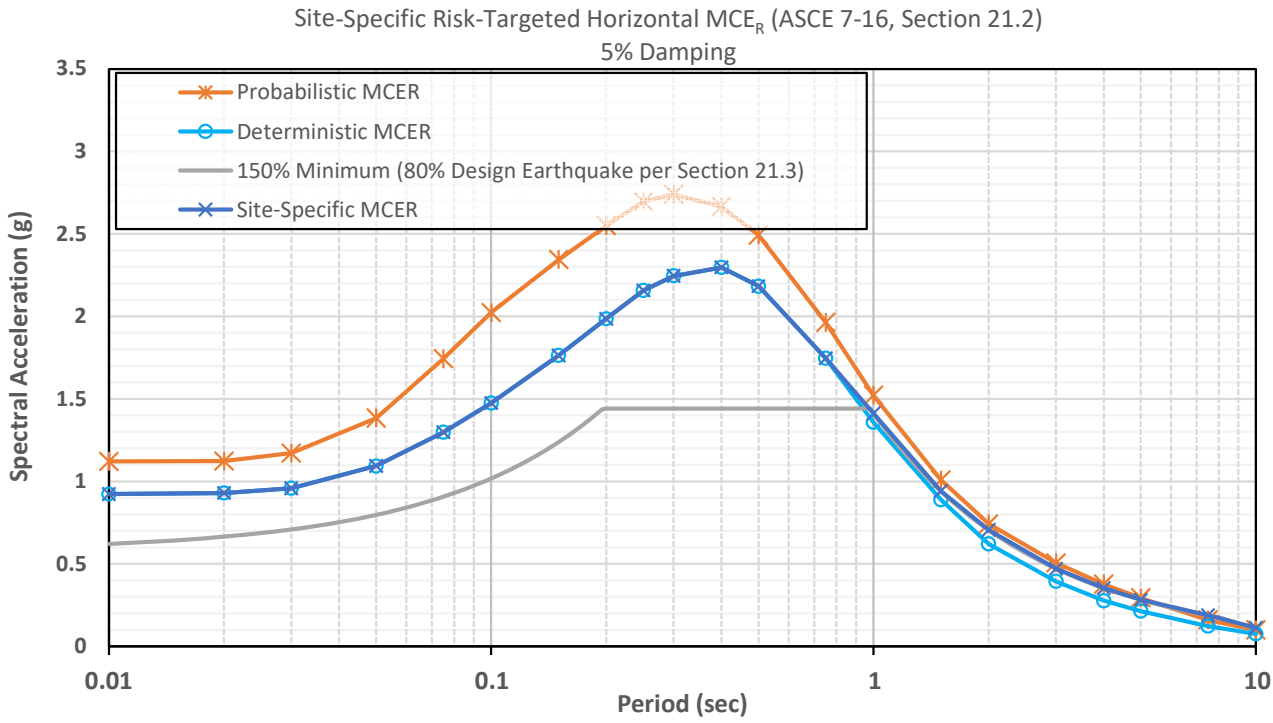

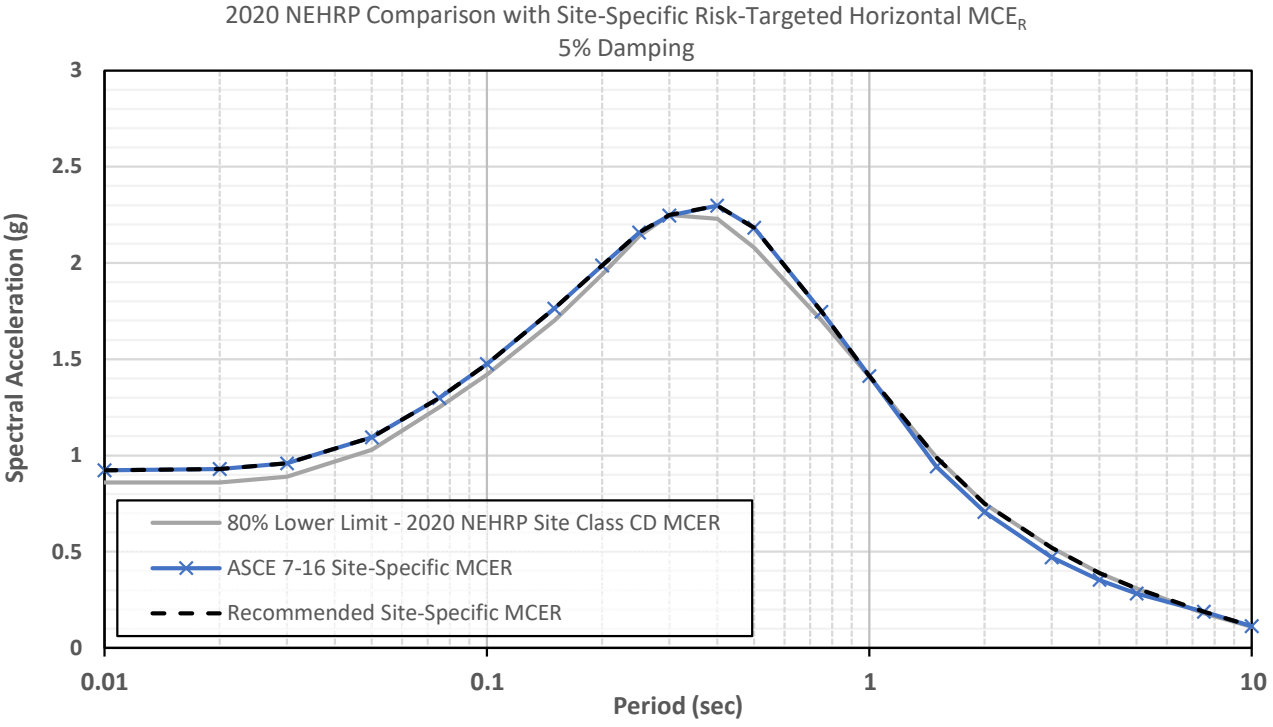

PROJECT NAME	FIGURE NAME		
City of Redlands Condition, Seismic, and Structural Assessment of Water Facilities	**Recommended MCE$_R$ Acceleration Response Spectrum Sunset Reservoir**	PROJECT NUMBER SD691	FIGURE NUMBER D-5m

GROUP DELTA

Recommended MCE_R and Design Earthquake ARS		
Period	Design	MCE_R
(sec)	Sa (g)	Sa (g)
0.01	0.615	0.923
0.02	0.620	0.930
0.03	0.639	0.959
0.05	0.729	1.094
0.075	0.866	1.299
0.1	0.984	1.475
0.15	1.176	1.763
0.2	1.324	1.987
0.25	1.438	2.158
0.3	1.500	2.250
0.4	1.532	2.298
0.5	1.455	2.183
0.75	1.164	1.747
1	0.942	1.412
1.5	0.660	0.990
2	0.500	0.750
3	0.347	0.520
4	0.260	0.390
5	0.207	0.310
7.5	0.126	0.188
10	0.075	0.113

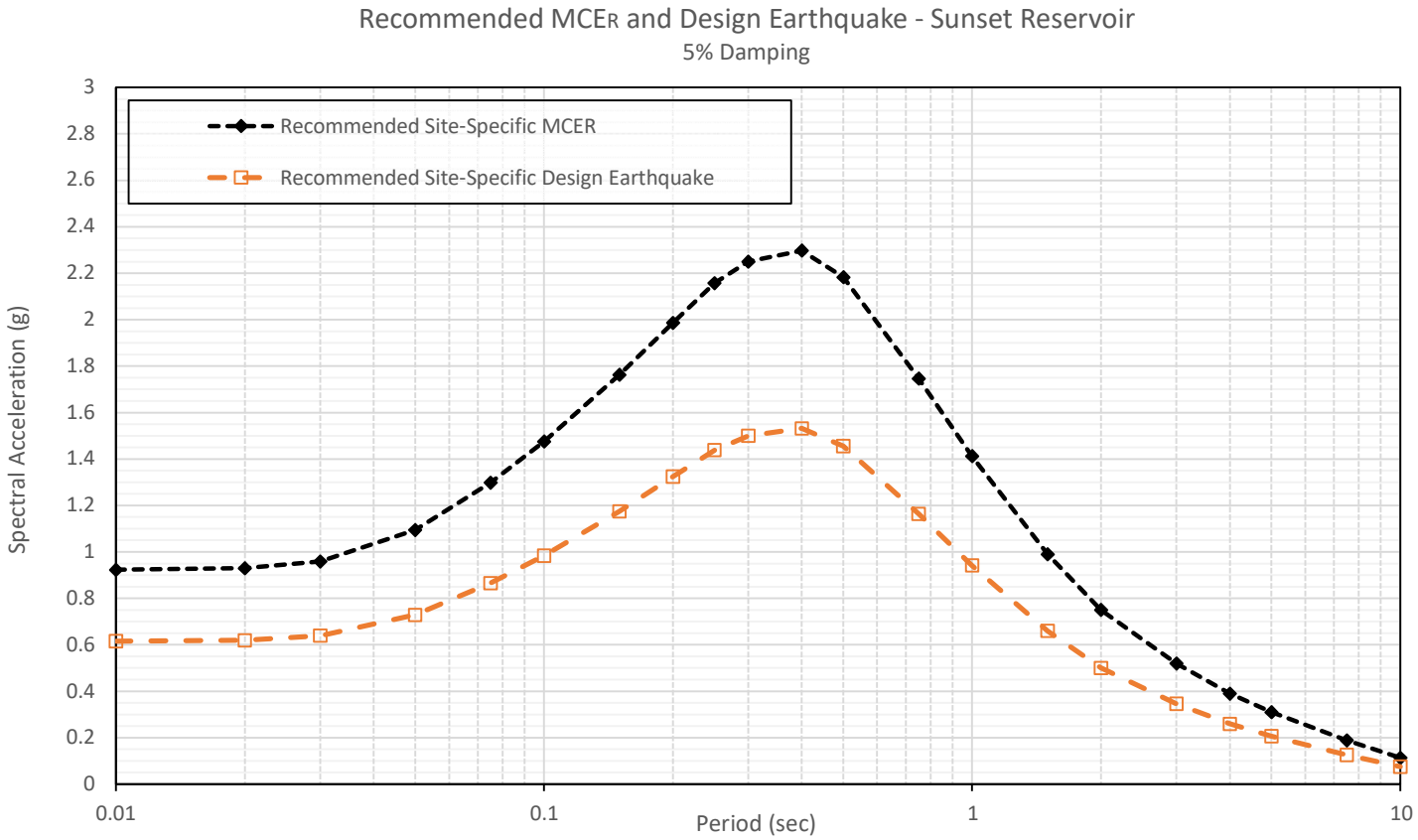

Site-Specific Design Acceleration Parameters (ASCE 7-16 Section 21.4)

S_{DS} = 90% of the peak S_a from T =0.2 to 5 s (not less than 80% of mapped S_{DS})

S_{D1} = Peak $T*S_a$ between periods of 1 second and 2 seconds (not less than 80% of mapped S_{D1})

S_{DS} = 1.379 **S_{D1} =** 1.040

PROJECT NAME	FIGURE NAME	GROUP DELTA	
City of Redlands Condition, Seismic, and Structural Assessment of Water Facilities	**Recommended MCE_R and Design Earthquake and Design Acceleration Parameters Sunset Reservoir**	PROJECT NUMBER SD691	FIGURE NUMBER D-6m

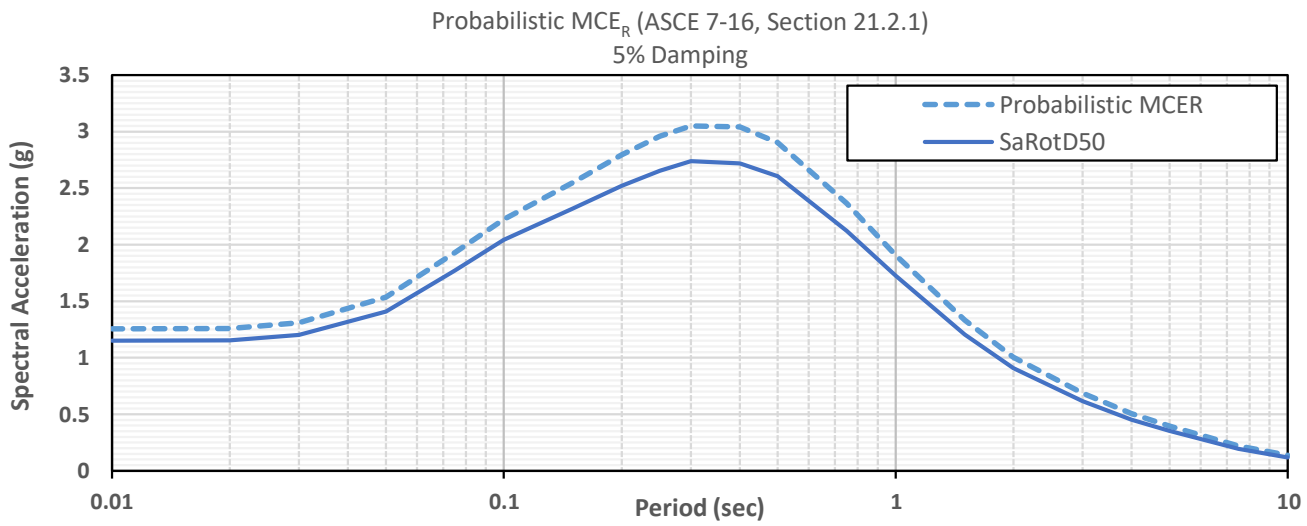

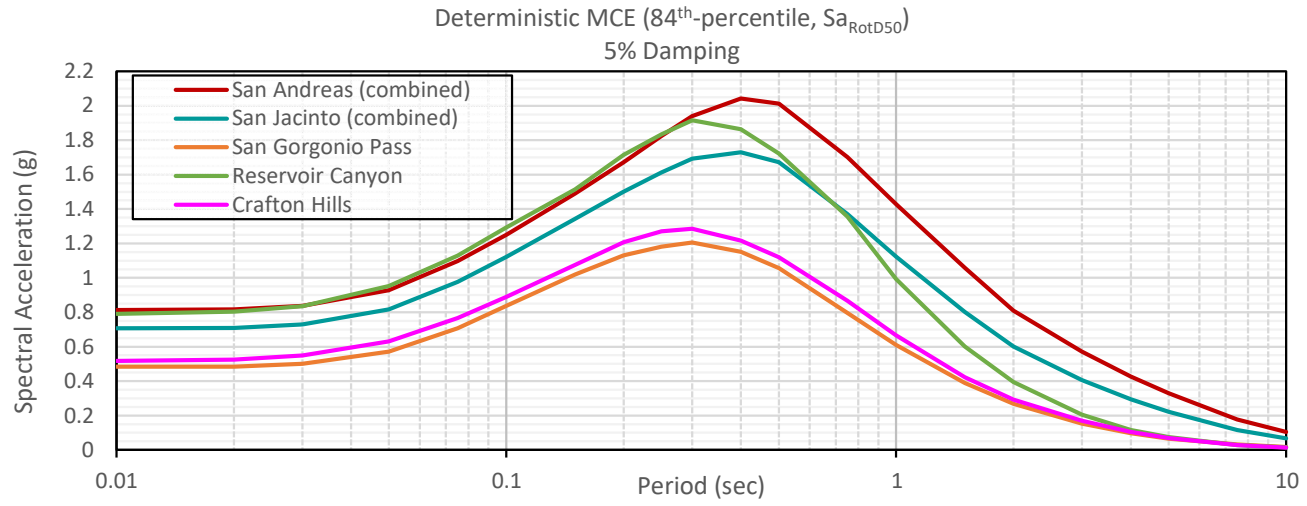

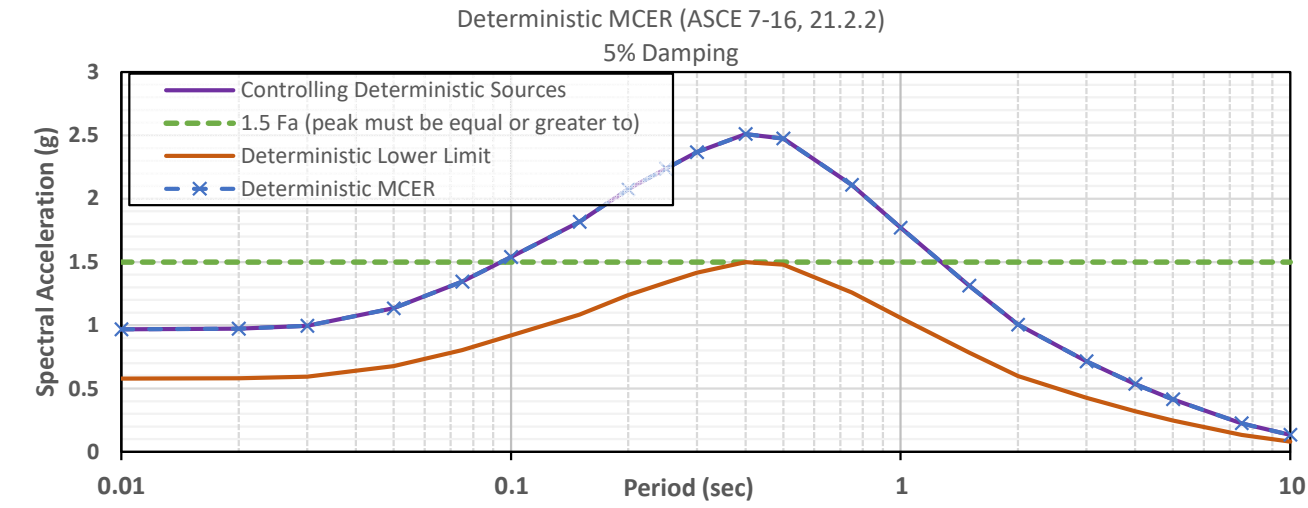

PROJECT NAME	FIGURE NAME		
City of Redlands Condition, Seismic, and Structural Assessment of Water Facilities	**Probabilistic and Deterministic MCE$_R$ Acceleration Response Spectra Texas Grove Reservoir**	PROJECT NUMBER SD691	FIGURE NUMBER D-4n

GROUP DELTA

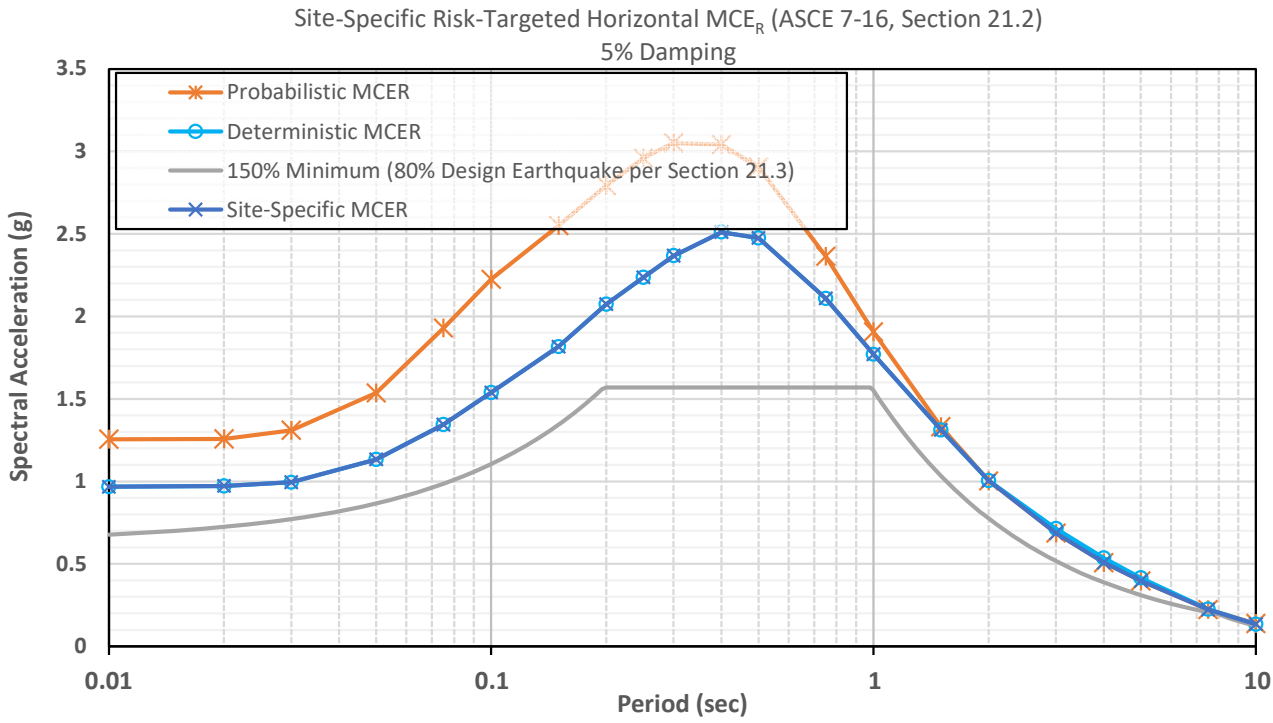

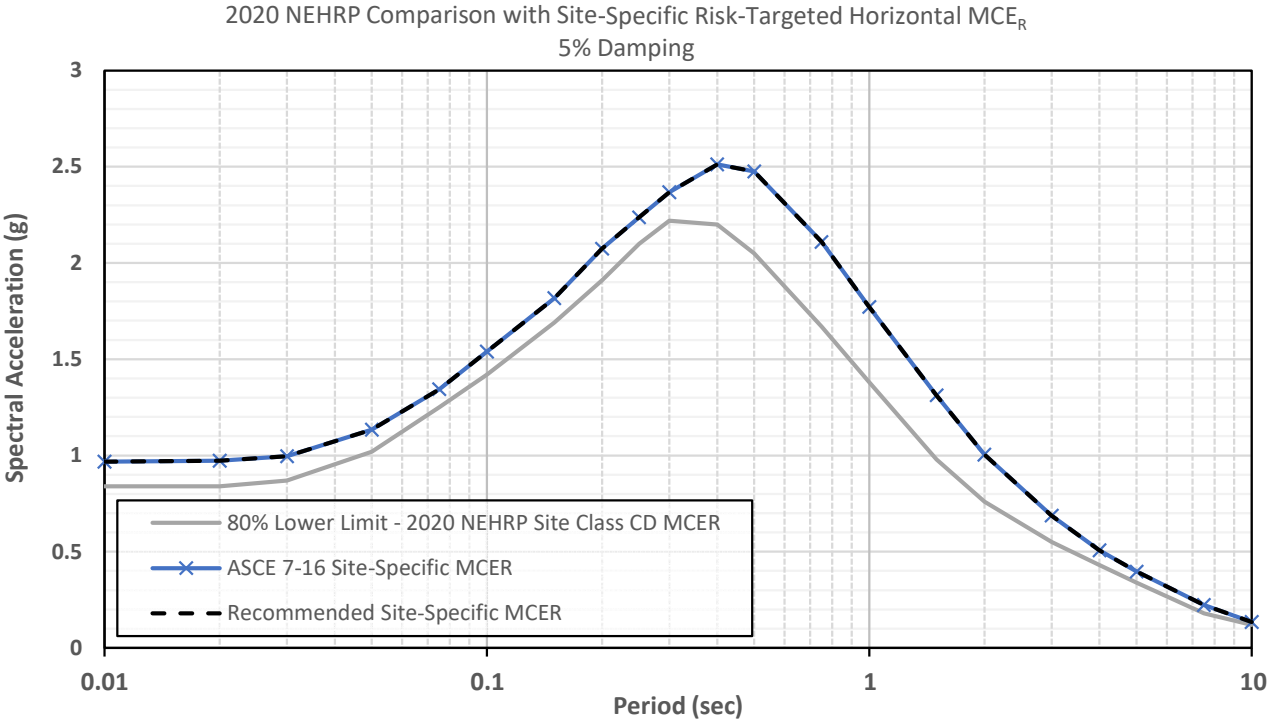

PROJECT NAME	FIGURE NAME		
City of Redlands Condition, Seismic, and Structural Assessment of Water Facilities	**Recommended MCE$_R$ Acceleration Response Spectrum Texas Grove Reservoir**	PROJECT NUMBER	FIGURE NUMBER
		SD691	D-5n

GROUP DELTA

Recommended MCE_R and Design Earthquake ARS		
Period	Design	MCE_R
(sec)	Sa (g)	Sa (g)
0.01	0.645	0.968
0.02	0.648	0.972
0.03	0.664	0.996
0.05	0.756	1.134
0.075	0.896	1.344
0.1	1.026	1.539
0.15	1.211	1.817
0.2	1.383	2.074
0.25	1.491	2.237
0.3	1.579	2.368
0.4	1.674	2.512
0.5	1.650	2.476
0.75	1.406	2.109
1	1.181	1.771
1.5	0.875	1.312
2	0.669	1.004
3	0.458	0.687
4	0.338	0.507
5	0.265	0.397
7.5	0.149	0.223
10	0.090	0.135

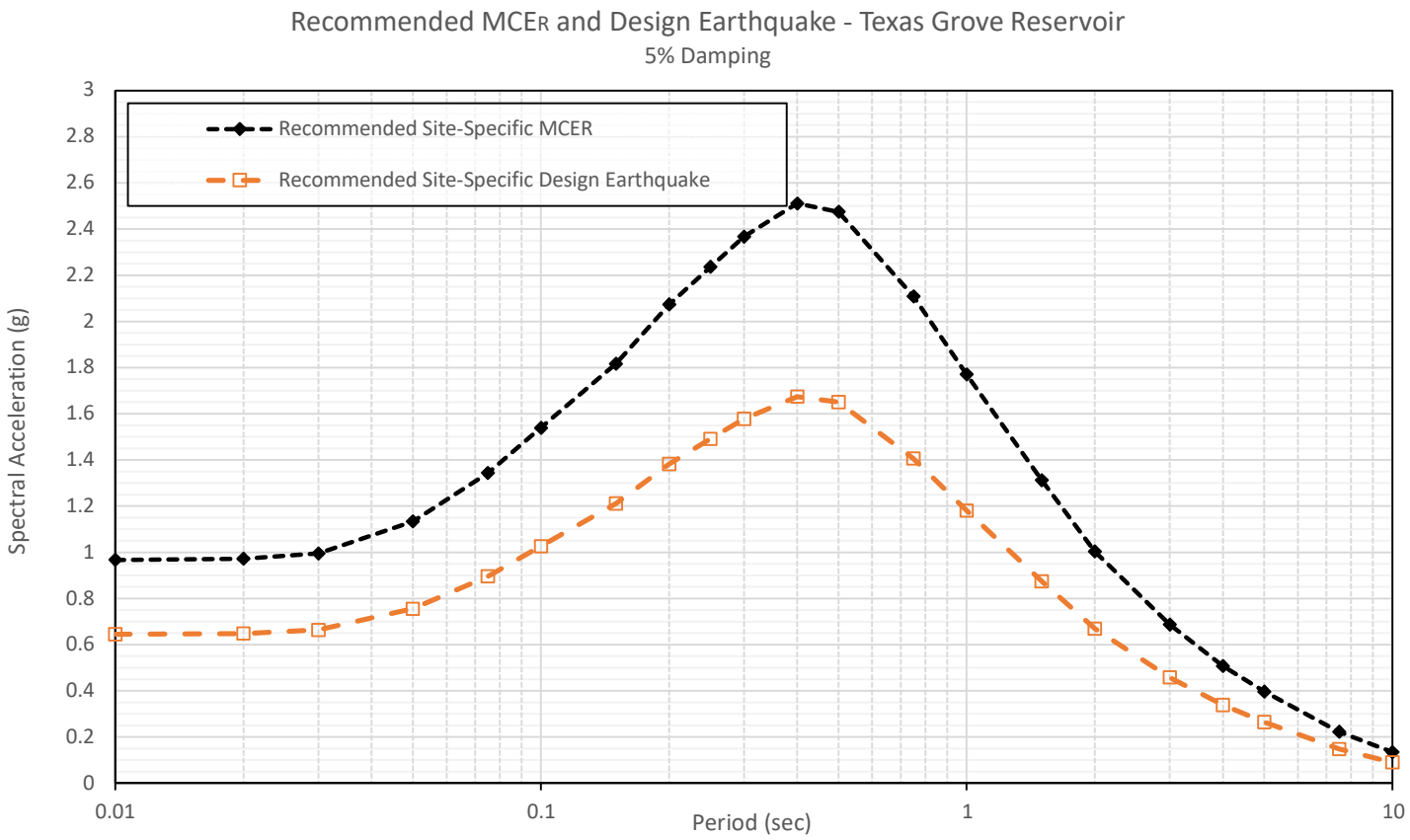

Site-Specific Design Acceleration Parameters (ASCE 7-16 Section 21.4)

S_{DS} = 90% of the peak S_a from T =0.2 to 5 s (not less than 80% of mapped S_{DS})

SD1 = Peak T*Sa between periods of 1 second and 5 seconds (not less than 80% of mapped SD1)

S_{DS} = 1.507 **S_{D1} =** 1.374

PROJECT NAME	FIGURE NAME	GROUP DELTA	
City of Redlands Condition, Seismic, and Structural Assessment of Water Facilities	**Recommended MCE_R and Design Earthquake and Design Acceleration Parameters Texas Grove Reservoir**	PROJECT NUMBER SD691	FIGURE NUMBER D-6n

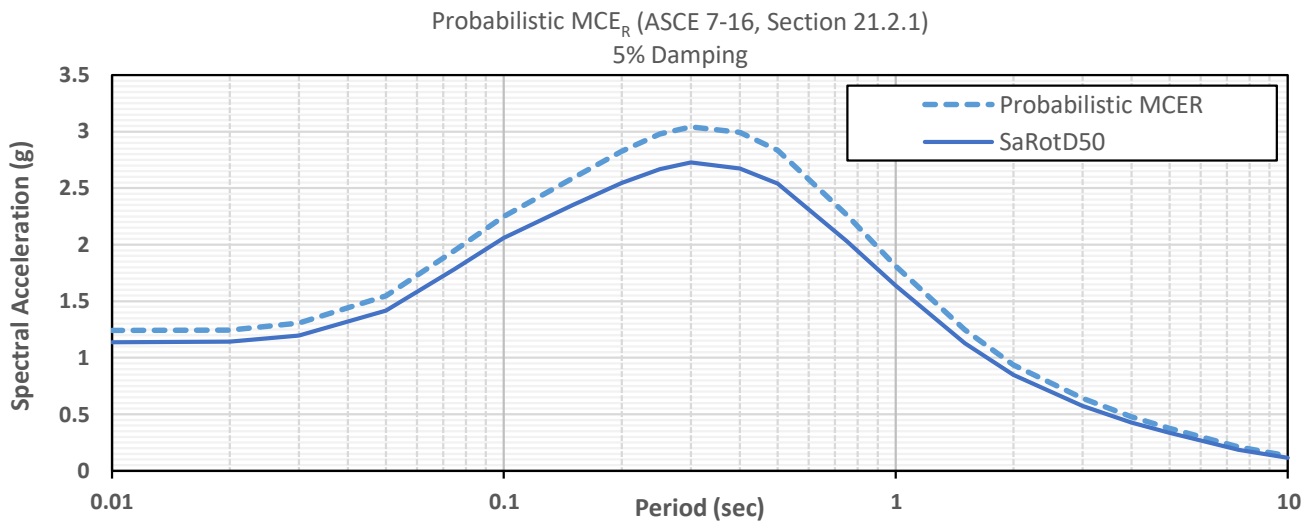

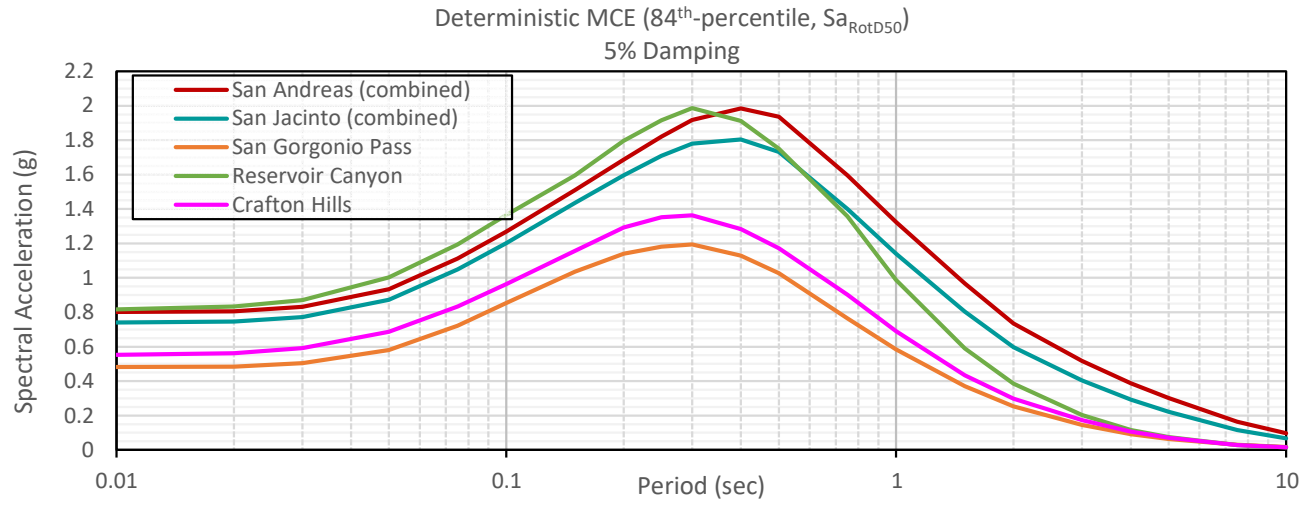

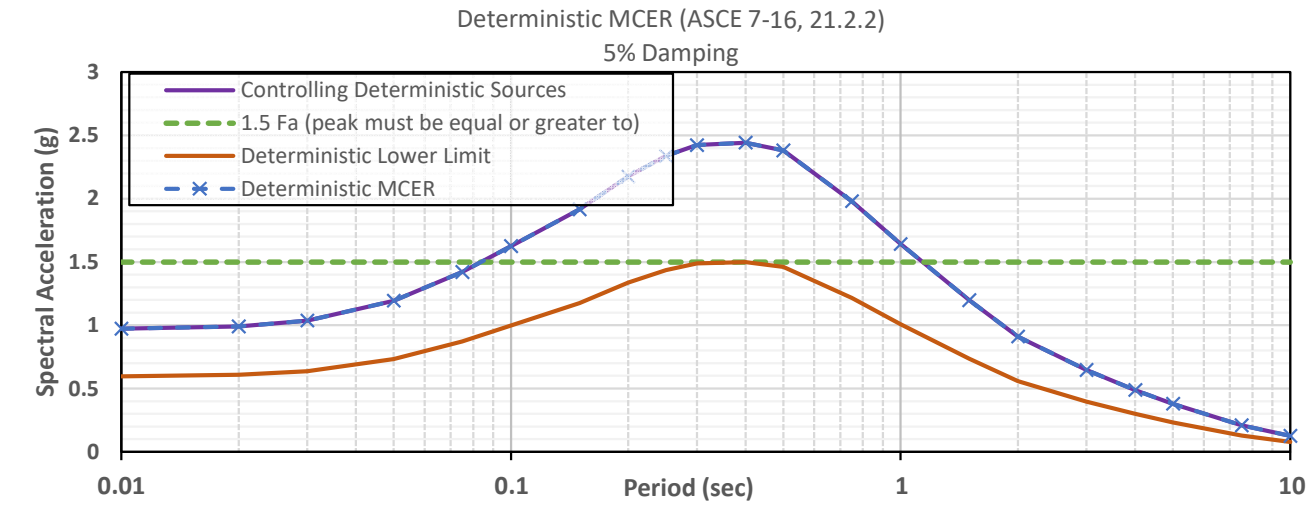

PROJECT NAME	FIGURE NAME		
City of Redlands Condition, Seismic, and Structural Assessment of Water Facilities	**Probabilistic and Deterministic MCE$_R$ Acceleration Response Spectra Texas Street Reservoir**	PROJECT NUMBER SD691	FIGURE NUMBER D-4o

GROUP DELTA

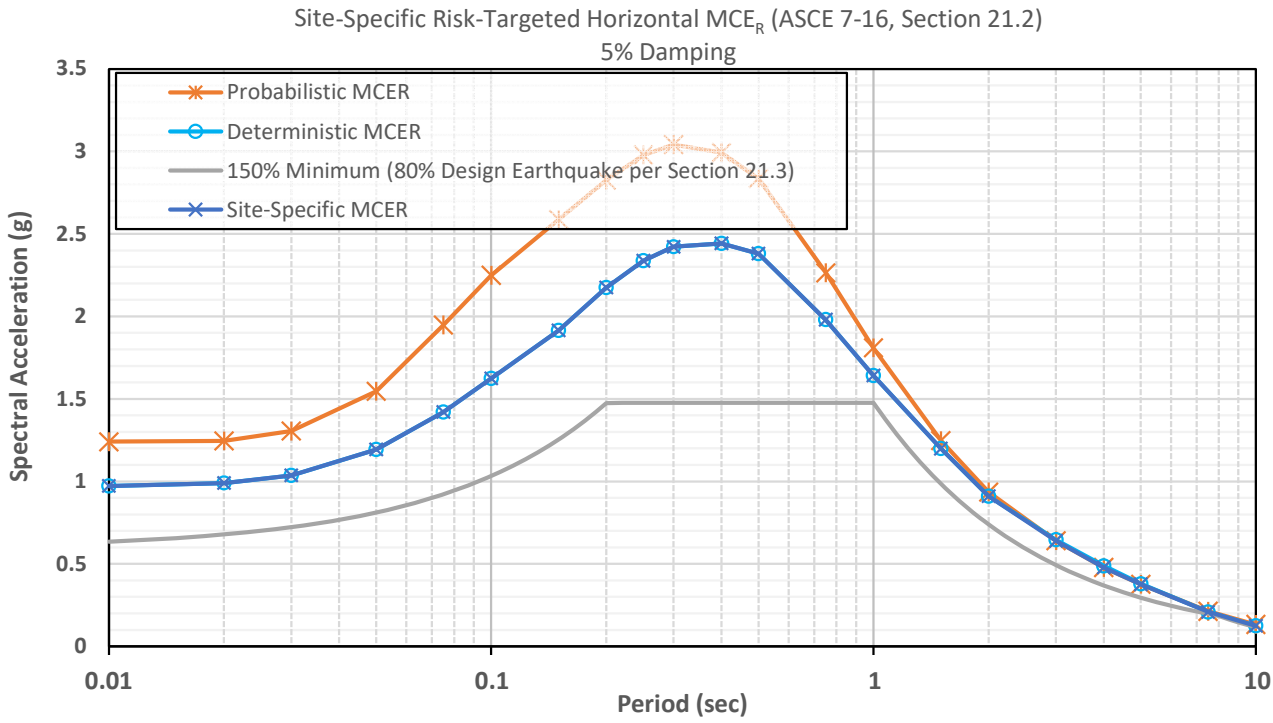

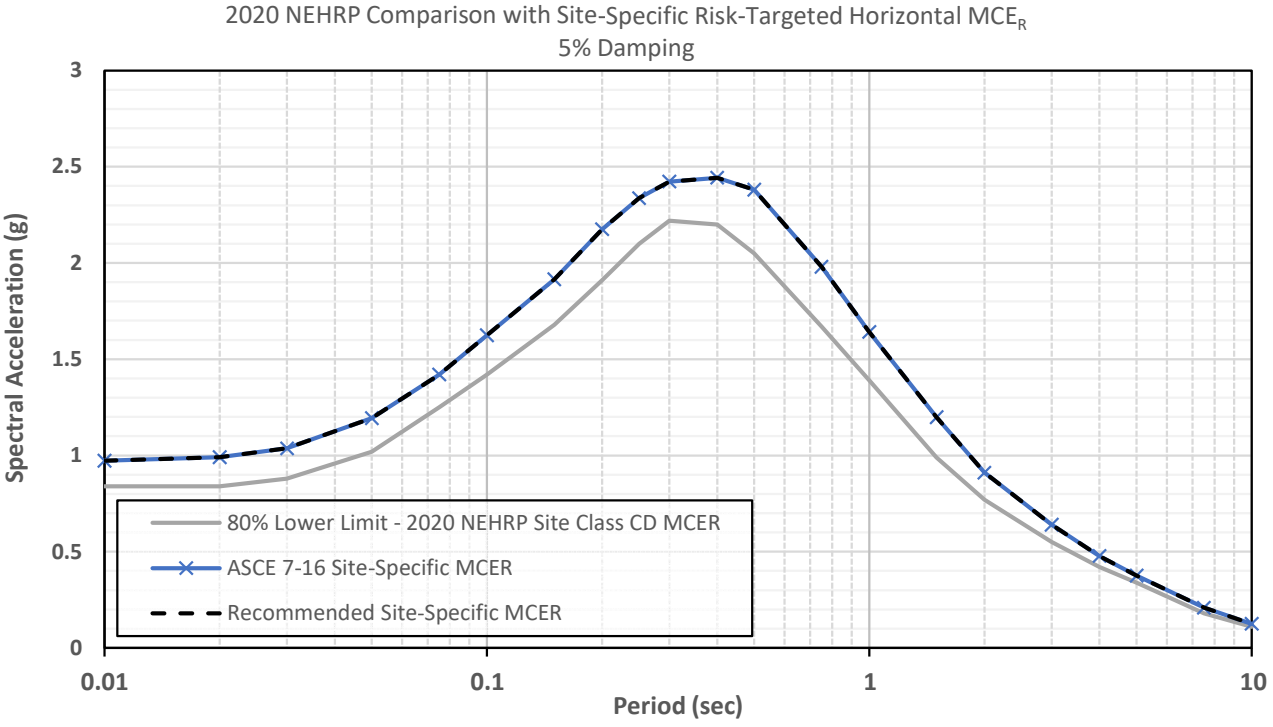

PROJECT NAME	FIGURE NAME		
City of Redlands Condition, Seismic, and Structural Assessment of Water Facilities	**Recommended MCE$_R$ Acceleration Response Spectrum Texas Street Reservoir**	PROJECT NUMBER	FIGURE NUMBER
		SD691	D-5o

GROUP DELTA

Recommended MCE_R and Design Earthquake ARS		
Period	Design	MCE_R
(sec)	Sa (g)	Sa (g)
0.01	0.649	0.973
0.02	0.661	0.991
0.03	0.691	1.037
0.05	0.796	1.194
0.075	0.947	1.420
0.1	1.083	1.625
0.15	1.277	1.916
0.2	1.450	2.175
0.25	1.558	2.337
0.3	1.615	2.423
0.4	1.628	2.443
0.5	1.587	2.381
0.75	1.320	1.980
1	1.094	1.642
1.5	0.799	1.198
2	0.607	0.910
3	0.427	0.640
4	0.319	0.478
5	0.251	0.376
7.5	0.139	0.209
10	0.084	0.126

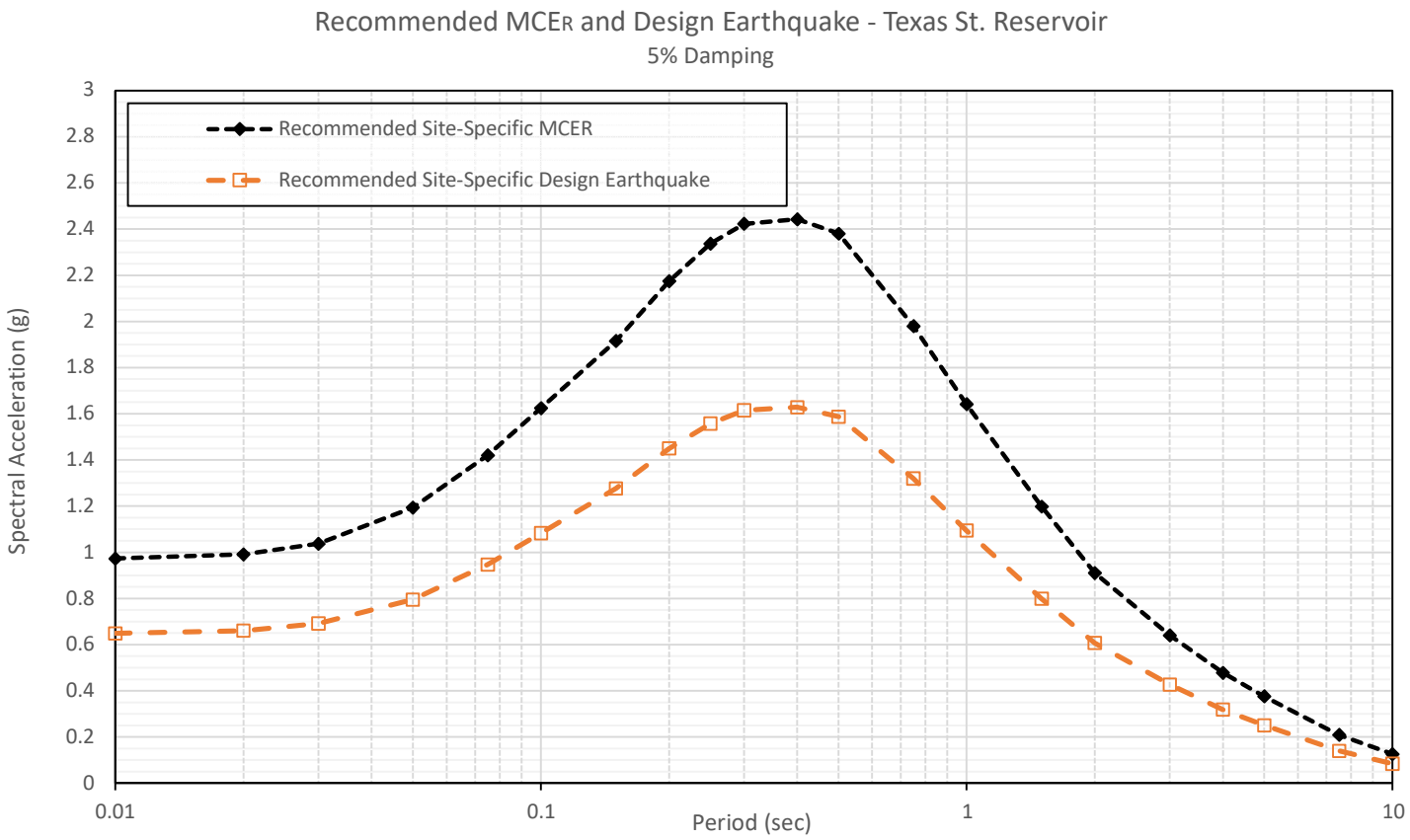

Site-Specific Design Acceleration Parameters (ASCE 7-16 Section 21.4)

S_{DS} = 90% of the peak S_a from T =0.2 to 5 s (not less than 80% of mapped S_{DS})

SD1 = Peak T*Sa between periods of 1 second and 5 seconds (not less than 80% of mapped SD1)

S_{DS} = 1.466 **S_{D1} =** 1.281

PROJECT NAME	FIGURE NAME	GROUP DELTA	
City of Redlands Condition, Seismic, and Structural Assessment of Water Facilities	**Recommended MCE_R and Design Earthquake and Design Acceleration Parameters Texas Street Reservoir**	PROJECT NUMBER: SD691	FIGURE NUMBER: D-6o

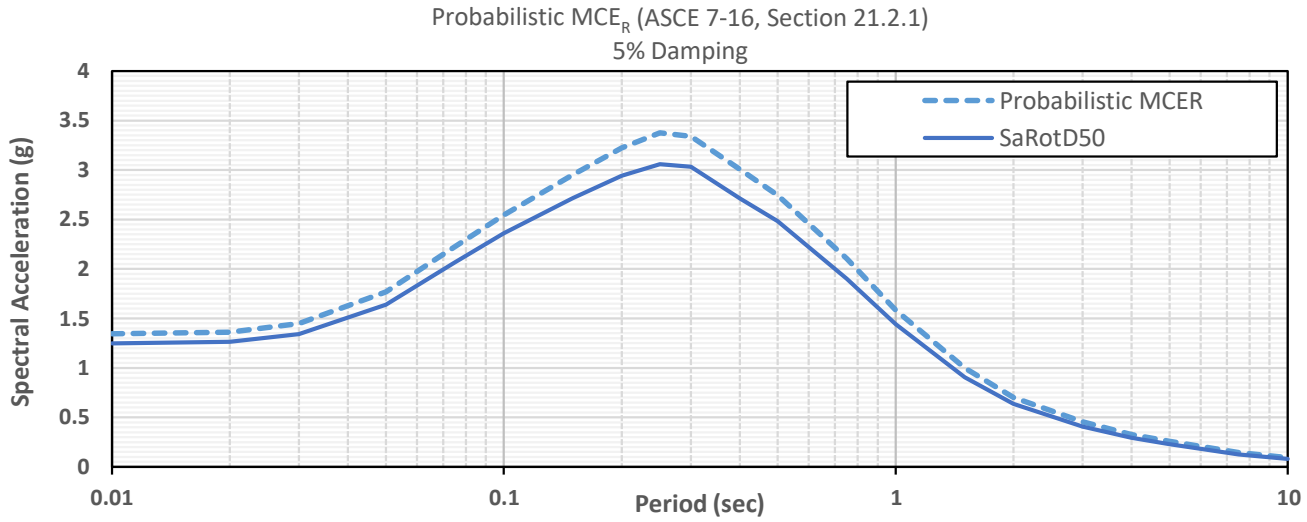

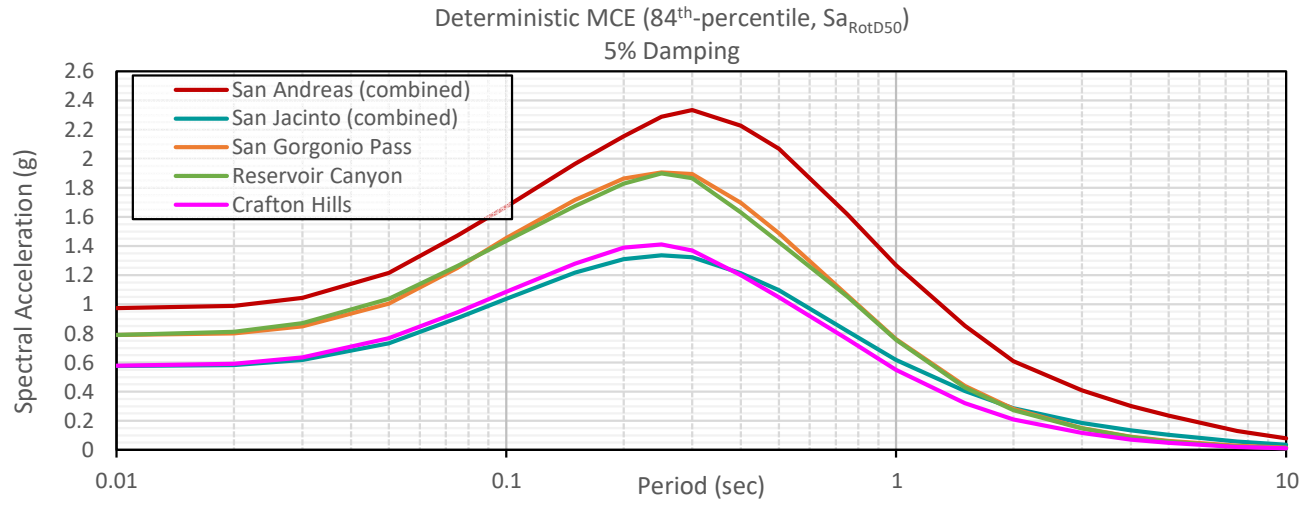

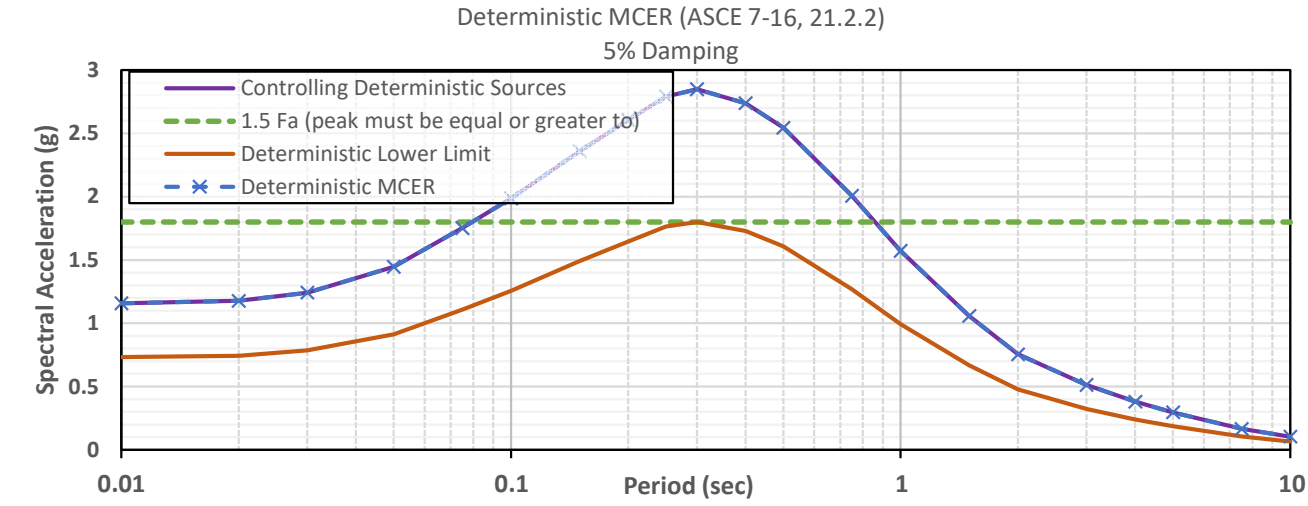

PROJECT NAME	FIGURE NAME		
City of Redlands Condition, Seismic, and Structural Assessment of Water Facilities	**Probabilistic and Deterministic MCE$_R$ Acceleration Response Spectra Ward Way Reservoir**	PROJECT NUMBER SD691	FIGURE NUMBER D-4p

GROUP DELTA

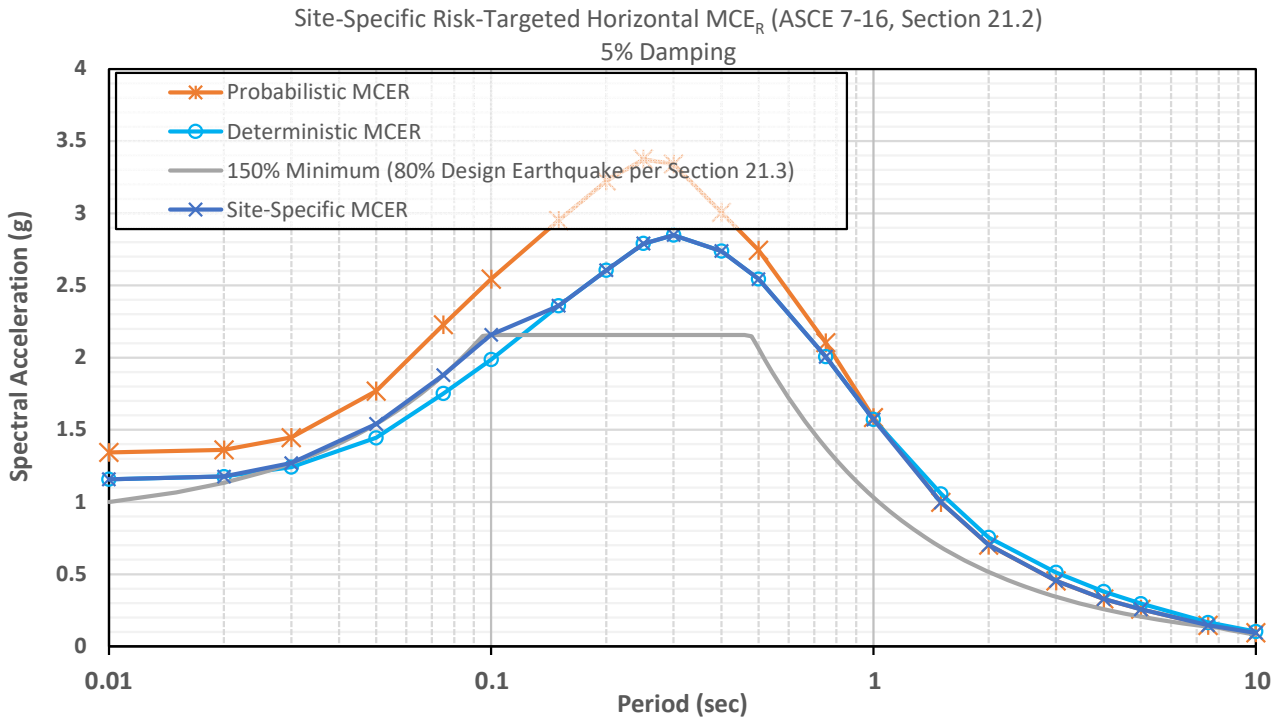

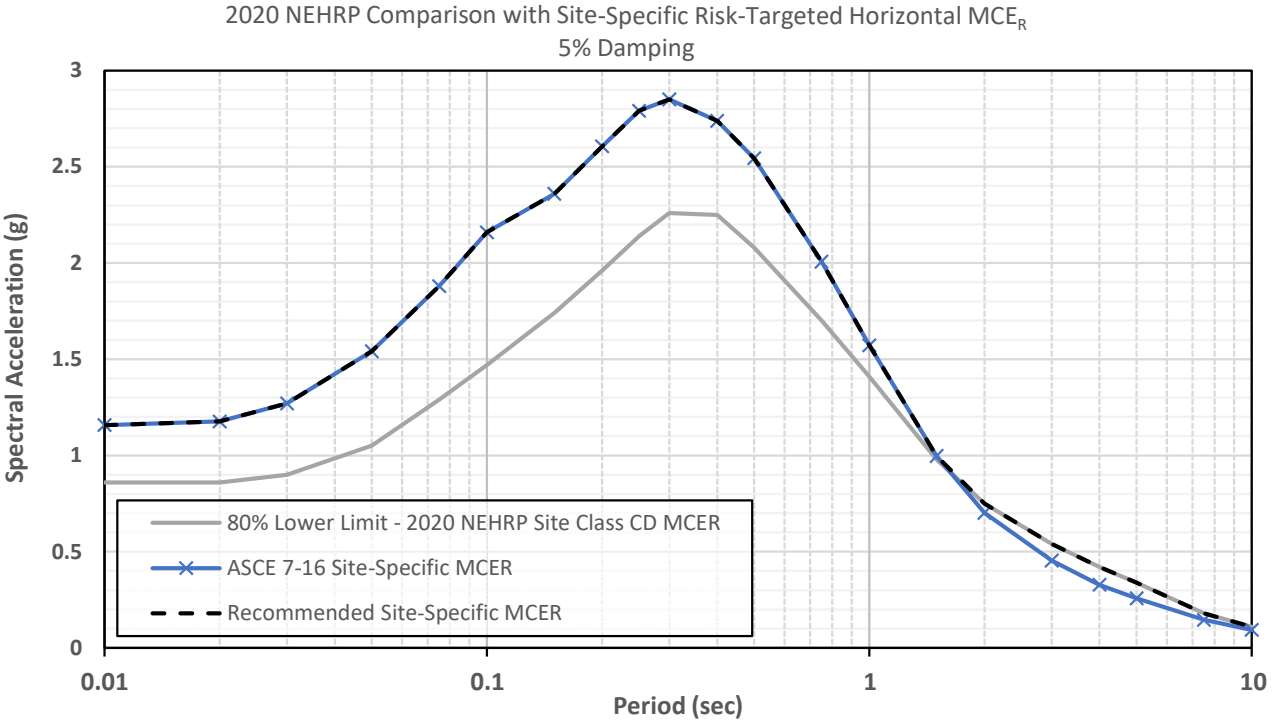

PROJECT NAME	FIGURE NAME		
City of Redlands Condition, Seismic, and Structural Assessment of Water Facilities	**Recommended MCE$_R$ Acceleration Response Spectrum Ward Way Reservoir**	PROJECT NUMBER SD691	FIGURE NUMBER D-5p

GROUP DELTA

Recommended MCE_R and Design Earthquake ARS		
Period	Design	MCE_R
(sec)	Sa (g)	Sa (g)
0.01	0.772	1.158
0.02	0.784	1.177
0.03	0.847	1.270
0.05	1.027	1.541
0.075	1.253	1.880
0.1	1.439	2.159
0.15	1.573	2.359
0.2	1.737	2.606
0.25	1.861	2.791
0.3	1.900	2.849
0.4	1.826	2.738
0.5	1.696	2.544
0.75	1.338	2.007
1	1.048	1.572
1.5	0.665	0.998
2	0.500	0.750
3	0.360	0.540
4	0.280	0.420
5	0.227	0.340
7.5	0.120	0.180
10	0.073	0.110

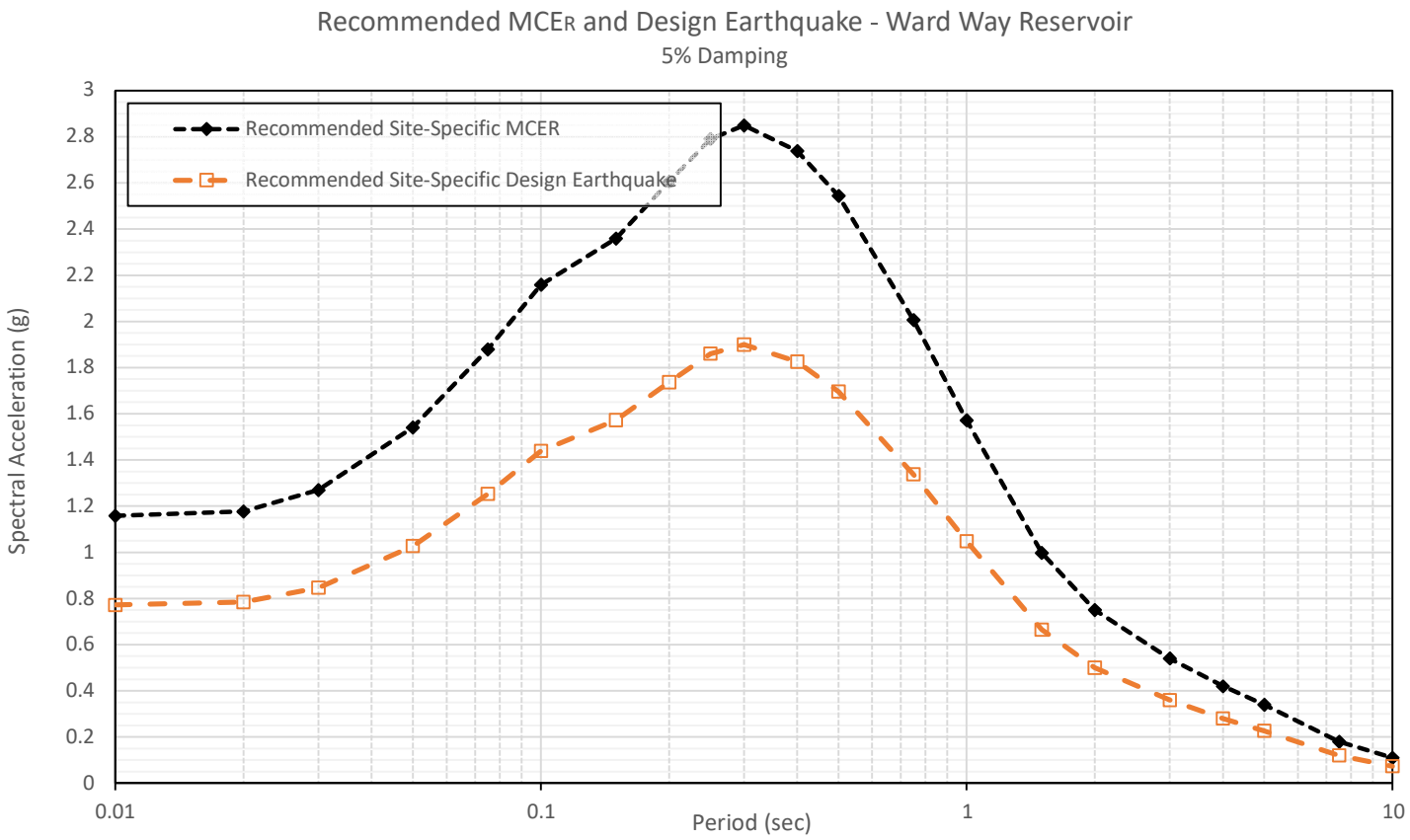

Site-Specific Design Acceleration Parameters (ASCE 7-16 Section 21.4)

S_{DS} = 90% of the peak S_a from T =0.2 to 5 s (not less than 80% of mapped S_{DS})

SD1 = Peak T*Sa between periods of 1 second and 2 seconds (not less than 80% of mapped SD1)

S_{DS} = 1.710 S_{D1} = 1.048

PROJECT NAME	FIGURE NAME	GROUP DELTA	
City of Redlands Condition, Seismic, and Structural Assessment of Water Facilities	**Recommended MCE_R and Design Earthquake and Design Acceleration Parameters Ward Way Reservoir**	PROJECT NUMBER SD691	FIGURE NUMBER D-6p

THIS PAGE INTENTIONALLY LEFT BLANK

GROUP DELTA

Richard Brady & Associates
10089 Willow Creek Road, Suite 375
San Diego, CA 92131

December 5, 2023
GDC Project No. SD691A

Attention: Mr. Adam Bogage, PE

Subject: Additional Geotechnical Recommendations
Agate, Country Club, Fifth Avenue, and Texas Street Reservoirs and Pump Stations
City of Redlands, California

Dear Mr. Bogage,

Group Delta Consultants, Inc. (Group Delta) is pleased to submit this supplemental geotechnical letter report to provide additional geotechnical recommendations for generator pad improvements at the five reservoir and pump station sites in the City of Redlands, California. This report supplements our Report of Geotechnical Investigation (Group Delta, 2021) which was provided in support of the condition, seismic and structural evaluation of sixteen reservoir and pump station sites in Redlands.

1.0 INTRODUCTION

The purpose of this letter report is to provide supplemental geotechnical recommendations for select improvements at the Agate, Country Club 1 and 2, Fifth Avenue, and Texas Street reservoirs and pump stations sites. We understand based on conversations with Richard Brady & Associates (BRADY) that new generator slabs will be constructed at the five sites and new pavements are planned at Fifth Avenue. In addition, a new retaining wall is planned to be constructed at Fifth Avenue and will be designed per the latest edition of the Standard Specifications for Public Works Construction ("Greenbook").

The objective of this study was to evaluate the existing conditions with regard to these new improvements and provide supplemental recommendations to support the design. Group Delta's scope of work included reviewing existing subsurface conditions at each of the five sites, performing supplemental laboratory testing on a sample of soil provided by BRADY from the Fifth Avenue reservoir site, and providing the requested earthwork, pavement, and retaining wall design recommendations.

2.0 SUBSURFACE CONDITIONS AND LABORATORY TESTING

Based on Group Delta's prior geotechnical evaluation (Group Delta, 2021), subsurface conditions at the five sites are generally underlain by silty sands (SM) and poorly graded sands with silt (SP-SM). Prior geotechnical laboratory testing suggests that near-surface soils are all suitable for reuse onsite as new fill, with fines contents less than 35%.

A supplemental bulk soil sample was collected from the Fifth Avenue site to support pavement design. Soils were visually classified as clayey sand (SC) in accordance with the Unified Soil Classification System per ASTM D2487. Laboratory testing on the sample included particle size analyses (ASTM C136) to supplement visual classification, and R-Value testing (Caltrans Test Method 301) to support pavement design. The resulting R-value was 22 for the clayey sand at Fifth Avenue. Laboratory test results are presented in Figures 1 and 2.

3.0 GEOTECHNICAL RECOMMENDATIONS

3.1 Earthwork

Earthwork should be conducted per the current applicable requirements of the 2022 California Building Code and the project specifications. This report provides the following recommendations for specific aspects of earthwork, which may need to be revised for final design, or based on the conditions observed during construction.

3.1.1 Site Preparation

General site preparation should begin with the removal of deleterious materials, including any existing structures, asphalt, concrete, vegetation, turf, contaminated soil, trash, expansive soils, and demolition debris. Areas disturbed by demolition should be restored with a subgrade that is stabilized to the satisfaction of the Geotechnical Engineer.

3.1.2 Remedial Earthwork

The subgrade of generator building slabs-on-grade and any shallow foundations may require remedial grading to provide a uniform bearing condition throughout. At a minimum, the upper 24 inches below finished subgrade should be removed and replaced as engineered fill. The remedial grading should extend at least 5 feet beyond the improvements.

The bottom of the excavation should be checked to ensure it is firm and unyielding prior to placement of new fill. The excavation should be filled with the excavated soils or other suitable onsite soils that are placed and compacted as recommended in the *Fill Compaction* section.

3.1.3 Fill Compaction

All fill and backfill should be placed and compacted at or slightly above optimum moisture content per ASTM D1557 using equipment capable of producing a uniformly compacted product. The loose lift thickness should be 8 inches, unless performance observed and testing during earthwork indicates a thinner loose lift is needed.

The minimum recommended relative compaction is 90 percent of the maximum dry density per ASTM D1557. Sufficient observation and testing should be performed by the project geotechnical consultant during grading so that an opinion can be rendered as to the compaction achieved.

Rocks or concrete fragments greater than 3 inches in maximum dimension should not be used in compacted fill.

3.1.4 Reuse of Existing Soil

We anticipate that the existing soils at the sites should be suitable for reuse based on existing laboratory testing data indicating silty and clayey sands and poorly graded sands (SM, SC, SP-SM). Rocks or concrete fragments greater than 3 inches in maximum dimension should not be reused. Since some sites may have higher gravel and/or cobble contents, some screening is anticipated to ensure that soils for fill have less than 3 inches in diameter. Soil with an EI greater than 20 should not be used within the upper two feet of the finished subgrade.

If clayey or expansive soils are encountered during earthwork operations, the geotechnical engineer or their designate may perform additional testing to evaluate the suitability of the soils for use as fill. Expansive soils should not be used within the building footprints.

3.1.5 Earthwork Observation and Testing

Excavations for foundations and general earthwork should be observed by the project Geotechnical Engineer. The Geotechnical Engineer should also conduct sufficient testing of fill and backfill during earthwork and improvement operations to support their professional opinion as to the compliance with the compaction recommendations. Such observations and tests are considered essential to identify field conditions that differ from those anticipated by this investigation, to adjust designs to the actual field conditions, and to determine that the construction is completed in accordance with the governing geotechnical recommendations.

3.2 Asphalt Concrete Pavement – Fifth Avenue

3.2.1 Introduction

Exterior surface improvements at the Fifth Avenue site include asphalt concrete (AC) paving. The following recommendations apply to site preparation for pavements:

- The upper 12 inches of pavement subgrade should be scarified immediately prior to constructing the improvement, brought to optimum moisture, and compacted to at least 95 percent of the maximum dry density per ASTM D1557.
- Aggregate base, where specified below, should be compacted to 95 percent of the maximum dry density per ASTM D1557. • Imported aggregate base should conform to Section 200-2.2, Crushed Aggregate Base (Public Works Standards, Inc., 2021).
- An R-Value of 22 may be assumed for a preliminary assessment of Asphalt Concrete surfaced pavements based on laboratory testing of existing near surface soils. The design subgrade R-Value should be confirmed by R-Value testing of the actual pavement subgrade soils during fine grading operations within the pavement areas.

3.2.2 Asphalt Concrete Pavement

Asphalt concrete pavement design was conducted in general accordance with the Caltrans Highway Design Manual (Topic 633.1). Traffic Indices of 5.0, 6.0, and 7.0 were assumed for preliminary design purposes. The project Civil Engineer should confirm the appropriate Traffic Indices for design. A 20-year pavement design life was assumed for the analyses.

Based on the assumed Traffic Indices and R-Value, the following minimum structural sections are recommended for new asphalt concrete pavements.

PRELIMINARY ASPHALT CONCRETE PAVEMENT SECTIONS (R-Value = 22)

Traffic Index	Asphalt Section	Base Section
5.0	4 inches	5 inches
6.0	4 inches	8 inches
7.0	4 inches	12 inches

Asphalt concrete should conform to Section 203-6 of the "Greenbook" (Public Works Standards, Inc., 2021) and should be compacted to between 91 and 97 percent of the maximum theoretical density per Caltrans Section 39 requirements (Caltrans Test 309 also known as Rice specific gravity or ASTM D2041).

3.3 Cantilevered Retaining Walls – Fifth Avenue

To support grade changes at Fifth Avenue, cantilever concrete retaining walls will be used. We understand that Brady plans to design the retaining walls in accordance with the "Greenbook". Foundations for new cantilevered retaining walls constructed on properly prepared subgrade in accordance with Section 3.1 of this letter report may use an allowable bearing capacity of 2,000 psf.

Appropriate measures for subsurface drainage behind the wall should be included to avoid the buildup of hydrostatic pressures from irrigation, surface runoff, or leaking underground utilities. Typically, crushed rock or geocomposite drainage panels are used behind the wall. Examples of conventional wall drainage are shown in Figure 3.

4.0 REFERENCES

American Society for Testing and Materials (2018). *Annual Book of ASTM Standards, Section 4, Construction, Volume 04.08 Soil and Rock (I); Volume 04.09 Soil and Rock (II); Geosynthetics,* March.

Caltrans (2018) *Highway Design Manual*, 6th Edition: dated July 2.

California Building Standards Commission (CBSC), (2019). *2019 California Building Code (CBC)*, California Code of Regulations, Title 24, Part 2, Volumes 1 and 2, July 1.

Group Delta Consultants (2021). *Report of Geotechnical Investigation, Condition, Seismic and Structural Assessment of Potable Water Storage Reservoirs, Pump Stations, and Transmission Mains, City of Redlands, California*, dated August 18.

Public Works Standards, Inc. (2021). *"Greenbook" Standard Specifications for Public Works Construction, 2021 Edition,* BNi Building News, Vista, California.

5.0 CLOSURE

We appreciate the opportunity to provide geotechnical services for this project. If you have any questions pertaining to this addendum, or if we can be of further assistance, please do not hesitate to contact us.

Yours Sincerely,
Group Delta Consultants, Inc.



Kristen Chang, PE, GE
Associate Engineer

Figures

Figures 1 and 2	Laboratory Test Results
Figure 3	Typical Retaining Wall Drainage

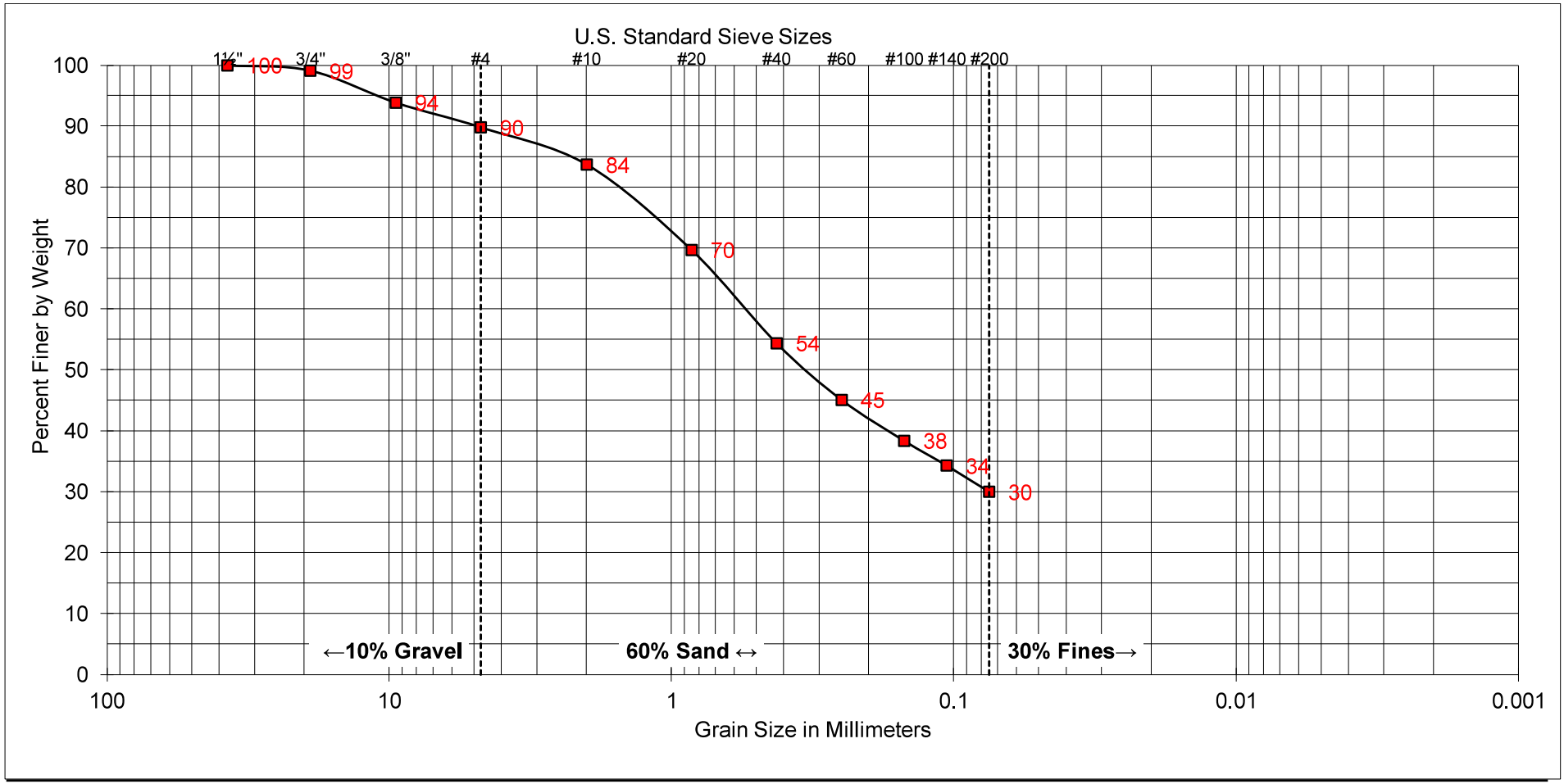

COARSE	FINE	COARSE	MEDIUM	FINE	SILT AND
GRAVEL		SAND			CLAY

SAMPLE	
EXPLORATION ID:	#1
SAMPLE DEPTH:	Fifth Avenue

UNIFIED SOIL CLASSIFICATION: SC

DESCRIPTION: CLAYEY SAND

ATTERBERG LIMITS	
LIQUID LIMIT:	--
PLASTIC LIMIT:	--
PLASTICITY INDEX:	--

GROUP DELTA

SOIL CLASSIFICATION

Project No. SD691A

FIGURE 1

SAMPLE NO.: B-1 **SAMPLE DATE:** 11/7/23

SAMPLE LOCATION: Fifth Avenue **TEST DATE:** 11/20/23

SAMPLE DESCRIPTION: Yellowish brown Clayey Sand (SC)

LABORATORY TEST DATA

	TEST SPECIMEN	1	2	3	4	5	
A	COMPACTOR PRESSURE	240	300	330			[PSI]
B	INITIAL MOISTURE	2.5	2.5	2.5			[%]
C	BATCH SOIL WEIGHT	1200	1200	1200			[G]
D	WATER ADDED	140	120	110			[ML]
E	WATER ADDED (D*(100+B)/C)	12.0	10.3	9.4			[%]
F	COMPACTION MOISTURE (B+E)	14.5	12.8	11.9			[%]
G	MOLD WEIGHT	2103.0	2101.3	2085.7			[G]
H	TOTAL BRIQUETTE WEIGHT	3185.4	3165.7	3159.9			[G]
I	NET BRIQUETTE WEIGHT (H-G)	1082.4	1064.4	1074.2			[G]
J	BRIQUETTE HEIGHT	2.55	2.53	2.52			[IN]
K	DRY DENSITY (30.3*I/((100+F)*J))	112.4	113.1	115.4			[PCF]
L	EXUDATION LOAD	1676	4461	6995			[LB]
M	EXUDATION PRESSURE (L/12.54)	134	356	558			[PSI]
N	STABILOMETER AT 1000 LBS	33	20	18			[PSI]
O	STABILOMETER AT 2000 LBS	71	39	34			[PSI]
P	DISPLACEMENT FOR 100 PSI	6.68	5.10	4.76			[Turns]
Q	R VALUE BY STABILOMETER	32	60	66			
R	CORRECTED R-VALUE (See Fig. 14)	32	60	66			
S	EXPANSION DIAL READING	0.0034	0.0068	0.0106			[IN]
T	EXPANSION PRESSURE (S*43,300)	147	294	459			[PSF]
U	COVER BY STABILOMETER	0.71	0.42	0.36			[FT]
V	COVER BY EXPANSION	1.13	2.27	3.53			[FT]

TRAFFIC INDEX:	5.0
GRAVEL FACTOR:	1.53
UNIT WEIGHT OF COVER [PCF]:	130
R-VALUE BY EXUDATION:	54
R-VALUE BY EXPANSION:	22
R-VALUE AT EQUILIBRIUM:	22

*Note: Gravel factor estimated from pavement section using CTM 301, Section C, Part b.

REV. 2, DATED 1/31/15

GROUP DELTA CONSULTANTS, INC.
ENGINEERS AND GEOLOGISTS
9245 ACTIVITY ROAD, SUITE 103
SAN DIEGO, CALIFORNIA 92126

R-VALUE TEST RESULTS
CT301

Project No. SD691A
FIGURE 2.1

Sample: B-1, Fifth Avenue

R-Value at Equilibrium: 22

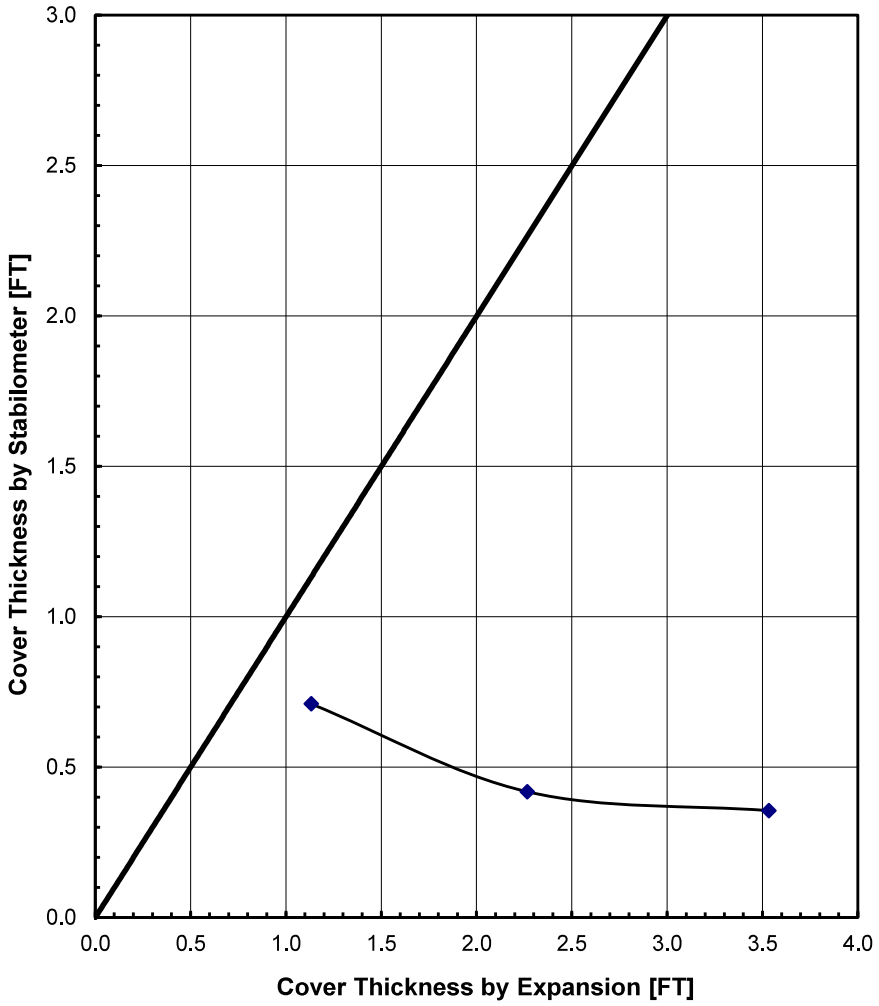

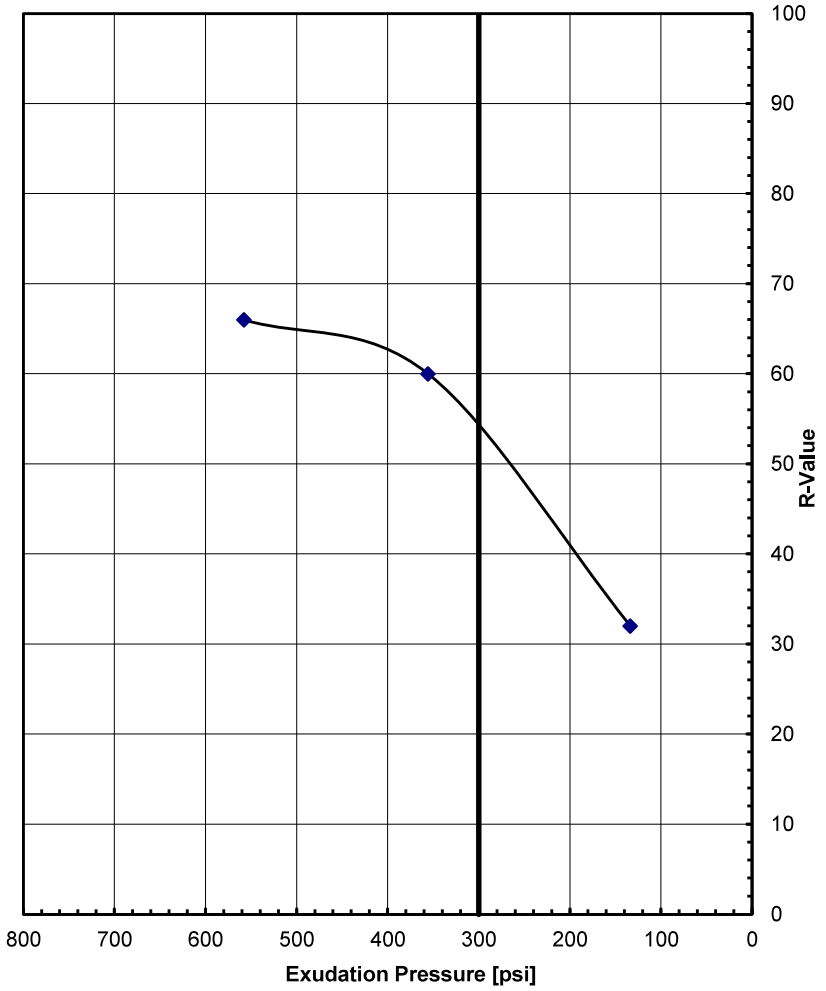

GROUP DELTA CONSULTANTS, INC.
ENGINEERS AND GEOLOGISTS
9245 ACTIVITY ROAD, SUITE 103
SAN DIEGO, CALIFORNIA 92126

COVER AND EXUDATION CHARTS

Project No. SD691A

FIGURE 2.2

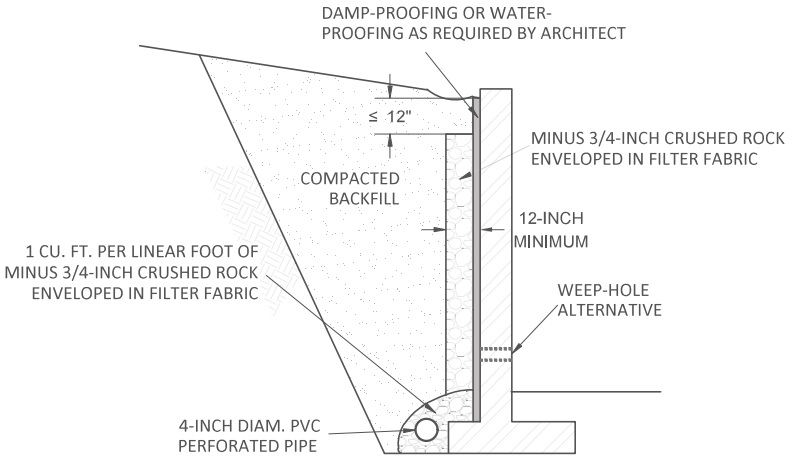

1) PERFORATED PIPE SHOULD OUTLET THROUGH A SOLID PIPE TO A FREE GRAVITY OUTFALL. PERFORATED PIPE AND OUTLET PIPE SHOULD HAVE A FALL OF AT LEAST 1%.
2) FILTER FABRIC SHOULD CONSIST OF MIRAFI 140N, SUPAC 5NP, AMOCO 4599, OR SIMILAR APPROVED FABRIC. FILTER FABRIC SHOULD BE OVERLAPPED AT LEAST 6-INCHES.
3) AS AN ALTERNATIVE TO THE PERFORATED PIPE AND OUTLET, WEEP HOLES MAY BE CONSTRUCTED. WEEP-HOLES SHOULD BE AT LEAST 2 INCHES IN DIAMETER, SPACED NO GREATER THAN 8 FEET, AND BE LOCATED JUST ABOVE GRADE AT THE BOTTOM OF WALL.

ROCK AND FABRIC DRAIN OPTION (A)

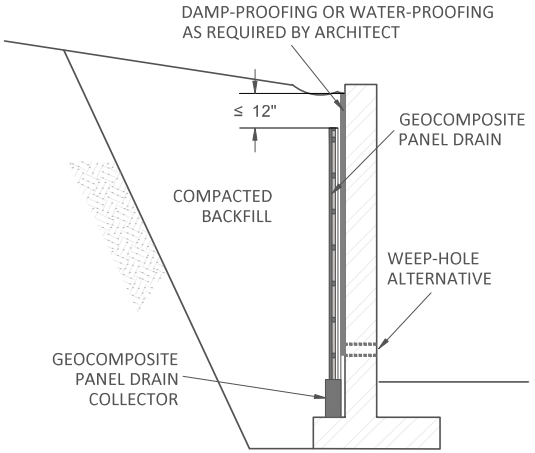

1) GEOCOMPOSITE DRAIN SHOULD MEET SPECIFICATIONS OF CCW MIRADRAIN 6000 OR EQUIVALENT.
2) GEOCOMPOSITE DRAIN SHOULD MEET SPECIFICATIONS OF CCW QUICKDRAIN OR EQUIVALENT.
3) AS AN ALTERNATIVE TO THE PERFORATED PIPE AND OUTLET, WEEP-HOLES MAY BE CONSTRUCTED. WEEP-HOLES SHOULD BE AT LEAST 2 INCHES IN DIAMETER, SPACED NO GREATER THAN 8 FEET, AND BE LOCATED JUST ABOVE GRADE AT THE BOTTOM OF WALL.

PANEL DRAIN OPTION (B)

NOT TO SCALE

CITY OF REDLANDS FIFTH AVENUE RESERVOIR	TYPICAL RETAINING WALL DRAINAGE	GROUP DELTA
		PROJECT NUMBER: SD691A
		FIGURE NUMBER: 3

THIS PAGE INTENTIONALLY LEFT BLANK

APPENDIX H
Approved Generator Shop Drawings

THIS PAGE INTENTIONALLY LEFT BLANK

BRADY
Water • Power • Transportation

SUBMITTAL REVIEW

Date: June 12, 2025

To: City of Redlands **Attention:** Paul Mariscal	**Project Owner:** City of Redlands **Project Name:** City of Redlands Water Facilities Generators
Date Received: June 12, 2025 **Reviewed By:** Ryan Nishimura	**Job No.:** PROJECT 501028 (BRADY)
Item of Equipment or Material: OFE Agate Generator	**Specification Section / Drawing:** Specification 16622 / Sheet AG-E-2

Submittal No.	Subject of Shop Drawing or Data	No Exceptions Taken	Make Corrections Noted	Submit Specified Items	Revise & Resubmit	Rejected	For Record Only
OFE Submittal-3	OFE Agate Generator	X					

Comments:

Submittal review is for Owner Furnished Equipment (OFE). Comments are for information only.

1. No exceptions

Regards,

Ryan Nishimura, PE

Richard Brady & Associates

BRADY
Water • Power • Transportation

Corrections or comments made relative to submittals during this review do not relieve the contractor from compliance with the requirements of the drawings and specifications. This check is only for review of general conformance with the design concept of the project and general compliance with the information given in the contract documents. The contractor is responsible for confirming and correlating all quantities and dimensions; selecting fabrication processes and techniques of construction; coordinating its work with that of other trades, and performing its work in a safe and satisfactory manner.

656 East La Cadena Drive
Riverside CA 92507
Phone: (951) 683-5960 Fax: (951) 788-5112

GENERATOR SET SUBMITTAL FOR APPROVAL

Agate Avenue PS

City Of Redlands
955 Parkford Dr,
Redlands, CA 92374

Project Number: 240171
Stock ID: RE16828

(1) CATERPILLAR MODEL C18 DIESEL GENERATOR SETS, STANDBY RATED, 650KW, 277/480V, 3 PHASE, 60HZ AT 1800 RPM, WITH 660 GALLON INTEGRAL TANK AND SOUND ATTENUATED ENCLOSURE

Project Engineer: David Uriarte
Email: david.uriarte@quinnpower.com
Phone: (951) 774-3244

Bill of Materials

Configuration:

(1) CATERPILLAR MODEL C15 DIESEL GENERATOR SETS, STANDBY RATED, 650KW, 277/480V, 3 PHASE, 60HZ AT 1800 RPM, WITH 660 GALLON INTEGRAL TANK AND SOUND ATTENUATED ENCLOSURE

CAT Standard Features and options

Engine Package Description:

650kW CAT Diesel Engine, EPA TIER 2
Model C18, 6 Cylinder, 4-Cycle, TIER 2
CAT Electronic Governor (ADEM A4)

Starting / Charging System:

24VDC System
Standard Wet Batteries with rack and cables

Control System:

GCCP 1.2 Auto Start Control Panel
Features Include:
- 4-line back-lit LCD text display
- Multiple display languages
- Five-key menu navigation
- LCD alarm indication
- Customizable power-up text and images
- Data logging facility
- Internal PLC editor
- Protections disable feature
- Fully configurable via PC using USB & RS485 communication
- Front panel configuration with PIN protection
- Power save mode
- 3-phase generator sensing and protection
- Generator current and power monitoring (kW, kvar, kVA, pf)
- kW and kvar overload and reverse power alarms
- Over current protection
- Unbalanced load protection
- Breaker control via fascia buttons
- Fuel and start outputs configurable when using CAN Support for 0 V to 10 V & 4 mA to 20 mA sensors
- 8 configurable digital inputs (3 available for Customer use)
- 8 configurable digital outputs (5 available for Customer use)
- 4 configurable analogue/digital inputs (3 available for Customer Use)
- CAN, MPU and alternator frequency speed sensing in one variant
- Real time clock
- Manual and automatic fuel pump control
- Engine pre-heat and post-heat functions
- Engine run-time scheduler
- Engine idle control for starting & stopping
- Fuel usage monitor and low fuel level alarms
- 3 configurable maintenance alarms

Safety Shutoff for:
- High Water Temp
- Overspeed
- Low Oil Pressure
- Low Coolant Level

Cooling System:	
	Coolant Drain Valve
	Blower Fan and Fan Drive with Guards
	Thermostats and Housing
	Radiator, Package Mount
	Jacket Water Pump
	CAT Extended Life Coolant
Lube System:	
	Oil Filler and Dipstick
	Oil Filter, Spin on
	Lubricating Oil
	Oil drain with valve
	Shallow Oil Pan
Fuel System:	
	Primary Fuel Filter with Water Separator
	Secondary Fuel Filter
	Fuel Cooler
	Fuel Priming Pump
	Flexible Fuel Lines
	Engine Fuel Transfer Pump
Generators:	
	Brushless, Self-Excited 2/3 Pitch, Random Wound
	IP23 Protection
	Class H Insulation and Temperature Rise
	Terminal Box, Bottom Cable Entry
	AVR350 Automatic Voltage Regulator
	Neutral Bar
Finish:	
	All electroplated hardware or stainless steel
	Anticorrosive paint protection
	High gloss polyurethane paint for durability and scuff resistance
Manuals:	
	(1) Set Operations & Maintenance Manuals (Electronic Copy)
Tests:	
	Factory Standard Test @ 0.8 PF

Additional Optional Generator Set Equipment Included in Sale Quotation:

Enclosure and Options:	
	Sound Attenuated Level 1 Enclosure (White)
	125A Load Center
	GFCI Receptacle and Wiring
	Enclosure Lights
	Standard Air Cleaner
	Internal Rubber Type Isolators
Fuel Tank:	
	UL142, Double Walled, 629 Gallon (Usable), Integral Fuel Tank
	Fuel Level Switch
	Fuel Level Gauge and Alarm
	Fuel Tank Fill and Lock Cap
Circuit Breaker:	
	1200A LSI Manual, 100% Rated, UL Circuit Breaker
	Auxiliary Contacts / Shunt Trip

Generator:	
	Alternator LC7234J
	105C Degree Temperature Rise over 40C Degree Ambient
	Permanent Magnet Generator
Control Panel (with Options):	
	Gen Running & Fault Relay
	Dust Proof Control Panel
	Panel Mounted Audible Alarm
	Local Annunciator
	Input Expansion Module
	Output Expansion Module
	ADAM Advantech Modbus Gateway (ADAM-4572)
Cooling System:	
	Pump Style Jacket Water Heater
	Low Coolant Level Shutdown
Battery Charger:	
	Battery Charger, 10A, UL listed
Miscellaneous:	
	PL444 CAT 4G Telematics
	UL 2200 Listed Package Generator Set
	IBC Seismic Certification
	EPA Emissions Certification
	South Coast AQMD Pre-Certified
	(1) Set of Operation & Maintenance Manuals (Electronic Copy)
	Standard 5 Year Factory Warranty
Local Power Systems Services Included:	
	Delivery to Jobsite - ***Off loaded by others***
	Pre-Start up Assistance
	NFPA 110 Startup w/ 4 hour test
	Onsite Training
	One Year Customer Value Agreement
Quinn Power Systems Services NOT Included:	
	South Coast Air Quality Management Permits
	Sales tax
	Offloading/crane service of equipment off delivery truck
	Installation, wiring, piping, plumbing or anchoring of equipment
	Diesel fuel initial or for testing

SCOPE OF WORK

QPS to Supply the following Equipment as described in above Bill of Materials:

QPS will notify City of Redlands of the following:

- Estimated factory ready to ship date upon approval.
- When equipment received in our QPS yard and unit has been inspected.
- When Equipment is unit ready for jobsite delivery
- QPS will schedule carrier and delivery of above equipment to jobsite on single flatbed truck.

City of Redlands will be responsible for the following:

- Offload equipment from truck, via forklift or crane service and set in place.
- Mount, anchor, plumb and wire QPS supplied equipment on site.
- Terminate all electrical wires, exhaust piping and fuel piping from QPS supplied equipment
- Fill out and submit QPS Startup Checklist
- Provide 2 week notice for prospective startup date.

****Startup (if applicable) will not be conducted until the following items have been completed and received by QPS****

1. Startup Checklist
- Complete installation / anchoring
- Confirm wiring termination - including customer shore power for auxiliary equipment
- Confirm fuel is available for testing - must be done before technician's arrival
- Confirm building load available if necessary - NFPA 110
2. Permit to Operate, Authority to Construct, etc.

NOTES, EXCEPTION, CLARIFICATION

Quinn Power Systems is not a general, electrical or installing contractor. Providing equipment and services as described above only.

The equipment offered is CAT standard product provided for review. This quote is based on our understanding of your written specifications listed below:
Specification Section: 16622 Standby Diesel Electric Generators for Purchase by the City of Redlands (Owner), Single Line Diagram E 5.01

Quinn Power Systems is quoting a standard engineered product that complies with the functional intent of your verbal specification. Quinn Power Systems and Caterpillar will make every effort to meet the project delivery schedule requirements. However, do to the ongoing global supply chain disruptions, Quinn Power Systems will not be liable or accept any liquidated damage clause on a purchase order.

Depending on final height of installed generator set, a working platform may be required to access the control panel and maintenance doors. Platforms are not included in this proposal, unless stated above. Call for revised quotation if required.

Included in this quote is one (1), one day/ 8hrs (max) startup/ commissioning, (NFPA110). Additional technician trips to the jobsite due to insufficient site readiness will result in additional cost, at a billable rate of $1200 per day. A change order will be required prior to the scheduling of additional technician site visits.

Startup/Commissioning Services are provided for CAT factory/ QPS supplied equipment only. Scope of work for Startup Services available upon request. Out of Scope services are billed on a Time & Material basis in the field at purchaser's expense. QPS standard labor rates apply. Technician services are provided during normal business hours Monday through Friday.

Exception taken to any NETA 3rd party or independent testing requirements. Any and all testing as listed above to be provided by QPS technicians.

Cat® C18 DIESEL GENERATOR SETS

Standby & Prime: 60Hz



Image shown might not reflect actual configuration

Engine Model	Cat® C18 In-line 6, 4-cycle Diesel
Bore x Stroke	145 mm x 183 mm (5.7 in x 7.2 in)
Displacement	18.13 L (1106.3 in³)
Compression Ratio	14:1
Aspiration	Turbocharged Air-to-Air Aftercooled
Fuel Injection System	Electronic Unit Injection
Governor	Electronic ADEM™ A4

Model	Standby	Prime	Emission Strategy
C18	650 ekW, 812 kVA	600 ekW, 750 kVA	EPA TIER II

PACKAGE PERFORMANCE

Performance	Standby	Prime
Frequency	60 Hz	
Genset Power Rating	812 kVA	750 kVA
Genset power rating with fan @ 0.8 power factor	650 ekW	600 ekW
Emissions	EPA TIER II	
Performance Number	EM3838	EM3839
Fuel Consumption		
100% load with fan, L/hr (gal/hr)	181.7 (48.0)	166.7 (44.0)
75% load with fan, L/hr (gal/hr)	137.2 (36.2)	125.1 (33.0)
50% load with fan, L/hr (gal/hr)	95.0 (25.1)	88.8 (23.4)
25% load with fan, L/hr (gal/hr)	56.6 (14.9)	53.4 (14.1)
Cooling System[1]		
Radiator air flow restriction (system), kPa (in. water)	0.12 (0.48)	0.12 (0.48)
Radiator air flow, m³/min (CFM)	900 (31783)	900 (31783)
Engine coolant capacity, L (gal)	20.8 (5.5)	20.8 (5.5)
Radiator coolant capacity, L (gal)	77 (20.3)	77 (20.3)
Total coolant capacity, L (gal)	97.8 (25.8)	97.8 (25.8)
Inlet Air		
Combustion air inlet flow rate, m³/min (CFM)	65.4 (2309)	63.3 (2235.4)
Max. Allowable Combustion Air Inlet Temp, °C (°F)	48 (119)	48 (118)
Exhaust System		
Exhaust stack gas temperature, °C (°F)	425.9 (798)	403.8 (758)
Exhaust gas flow rate, m³/min (CFM)	159.1 (5618)	148.2 (5233)
Exhaust system backpressure (maximum allowable), kPa (in. water)	10.0 (40.0)	10.0 (40.0)
Heat Rejection		
Heat rejection to jacket water, kW (BTU/min)	208 (11828)	190 (10805)
Heat rejection to exhaust (total), kW (BTU/min)	662 (37647)	600 (34121)
Heat rejection to aftercooler, kW (BTU/min)	249 (14160)	230 (13079)
Heat rejection to atmosphere from engine, kW (BTU/min)	122 (6938)	113 (6426)

Emissions (Nominal)[2]	Standby	Prime
NOx, mg/Nm³ (g/hp-hr)	2053.7 (4.61)	1,994.4 (4.43)
CO, mg/Nm³ (g/hp-hr)	95.3 (0.21)	64.0 (0.15)
HC, mg/Nm³ (g/hp-hr)	34.1 (0.09)	34.0 (0.09)
PM, mg/Nm³ (g/hp-hr)	13.0 (0.03)	10.6 (0.03)

Alternator[3]											
Duty Cycle		Standby					Prime				
Phase		3-Phase					3-Phase				
Voltages, V		208	220	240	480	600	208	220	240	480	600
Current, Amps		2255	2132	1955	977	782	2082	1968	1804	902	722
Frame: LC7224H Excitation: AREP	Temperature Rise @ 40°C		150	130	130	150		125	105	105	125
	Motor Starting Capability @ 30% Voltage Dip, skVA		1829	2147	2147	1598		1829	2147	2147	1598
Frame: LC7234J Excitation: PMG	Temperature Rise @ 40°C	150	130	105	105	105	125	105	105	105	105
	Motor Starting Capability @ 30% Voltage Dip, skVA	1930	2142	2512	2512	2512	1930	2142	2512	2512	2512
Frame: LC7224L Excitation: AREP	Temperature Rise @ 40°C	105	105	80	80	105	105	80	80	80	80
	Motor Starting Capability @ 30% Voltage Dip, skVA	1917	2129	2501	2501	2503	1917	2129	2501	2501	2503
Frame: LC7224N Excitation: AREP	Temperature Rise @ 40°C	105	80			80	80	80			80
	Motor Starting Capability @ 30% Voltage Dip, skVA	2403	2666			3368	2403	2666			3368
Frame: LC7224P Excitation: AREP	Temperature Rise @ 40°C	80					80				
	Motor Starting Capability @ 30% Voltage Dip, skVA	2392					2392				

WEIGHTS & DIMENSIONS

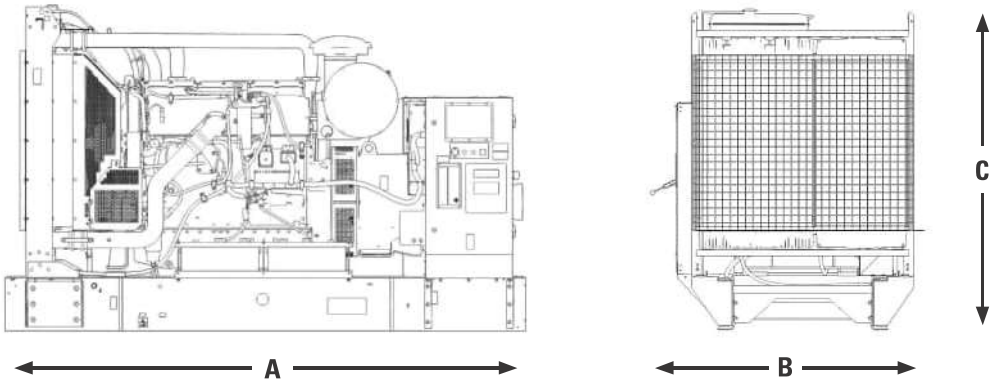

Dim "A" mm (in)	Dim "B" mm	Dim "C" mm (in)	Dry Weight kg (lb)
3512 (138)	1746 (69)	2322 (92)	4863 (10721)

Reference Mechanical Drawings

Note: General configuration not to be used for installation. See general dimension drawings for detail.

APPLICABLE CODES AND STANDARDS:

CSA C22.2 No 100-04, UL142, UL489, UL869, cUL/UL2200, NFPA 37, NFPA 70, NFPA 99,NFPA 110, IBC, IEC60034-1, ISO 3046, ISO 8528, NEMA MG 1-33.

Note: Codes may not be available in all model configurations. Please consult your local Cat Dealer representative for availability.

STANDBY: Output available with varying load for the duration of the interruption of the normal source power. Average power output is 70% of the standby power rating. Typical operation is 200 hours per year, with maximum expected usage of 500 hours per year.

PRIME: Output available with varying load for an unlimited time. Average power output is 70% of the prime power rating. Typical peak demand is 100% of prime rated ekW with 10% overload capability for emergency use for a maximum of 1 hour in 12. Overload operation cannot exceed 25 hours per year.

RATINGS: Ratings are based on SAE J1349 standard conditions. These ratings also apply at ISO3046 standard conditions.

DEFINITIONS AND CONDITIONS

[1] For ambient and altitude capabilities consult your Cat dealer. Air flow restriction (system) is added to existing restriction from factory.

[3] UL 2200 Listed packages may have oversized generators with a different temperature rise and motor starting characteristics. Generator temperature rise is based on a 40° C ambient per NEMA MG1-32.

LET'S DO THE WORK.™

www.cat.com/electricpower
© 2024 Caterpillar. All Rights Reserved.
Materials and specifications are subject to change without notice. The International System of Units (SI) is used in this publication.
CAT, CATERPILLAR, LET'S DO THE WORK, their respective logos, "Caterpillar Corporate Yellow", the "Power Edge" and Cat "Modern Hex" trade dress as well as corporate and product identity used herein, are trademarks of Caterpillar and may not be used without permission.

LEHE1758-06 (10/24)

Enclosures



Picture shown may not reflect actual configuration

C13/C15/C18
SOUND ATTENUATED ENCLOSURES

US Sourced
Diesel Generator Set
350 - 750 ekW 60 Hz

Features

Robust/Highly Corrosion Resistant Construction

- Factory installed on skid base
- Environmentally friendly, polyester powder baked paint
- 14 gauge steel
- Interior zinc plated fasteners
- Exterior stainless steel fasteners
- Internally mounted exhaust silencing system
- Designed and tested to comply with UL 2200 Listed generator set package
- Compression door latches providing solid door seal

Excellent Access

- Large cable entry area for installation ease
- Accommodates side mounted single or multiple breakers
- Three doors on both sides
- Vertically hinged allow 180° opening rotation and retention with door stays
- Lube oil and coolant drains piped to the exterior of the enclosure base
- Radiator fill cover

Security and Safety

- Lockable access doors which give full access to control panel and breaker
- Cooling fan and battery charging alternator fully guarded
- Fuel fill, oil fill and battery can only be reached via lockable access
- Externally mounted emergency stop button
- Designed for spreader bar lifting to ensure safety
- Stub-up area is rodent proof

Transportability

These enclosures are of extremely rugged construction to withstand outdoor exposure and rough handling common on many construction sites.

Options

- Enclosure constructed with 14 gauge steel
- Enclosure constructed with 12 gauge aluminum (5052 grade)
- Caterpillar yellow and white paint
- Control panel viewing window#
- UL Listed integral fuel tank with 670, 400, and 300 gallon capacities
- UL Listed sub base fuel tank with 660, 1000, 1800, and 2200 gallon capacities.
- Seismic certification per applicable building codes: IBC 2000, IBC 2003, IBC 2006, IBC 2009, IBC 2012, IBC 2015 CBC 2007, CBC 2010
- IBC Certification for 150 mph wind loading
- AC/DC lighting package
- 5 kW Canopy space heater to facilitate compliance with NFPA 110
- Motorized louvers and gravity discharge damper
- 125A Load Center
- GFCI outlets

Not available with aluminum enclosures.

Level 1 Sound Attenuated Enclosure (Steel) Sound Levels

Model	Standby eKW	Cooling Air Flow Rate		Ambient Capability*		Sound Pressure Levels (dBA) at 7m (23 ft)
		m³/s	cfm	°C	°F	100% Load
C13	350	8.5	18010	57	135	74
	400	8.5	18010	56	133	75
C15	350	10.4	22072	59	138	73
	400	10.4	22072	51	124	73
	450	10.4	22072	46	115	74
	500	12.5	26415	48	118	75
C18	550	8.1	17234	45	113	75
	600	8.1	17234	43	109	75
	650	12.7	26909	51	123	75
	700	12.7	26909	48	118	75
	750	12.7	26909	48	118	75

Sound Attenuated Enclosure (Aluminum) Sound Levels

Model	Standby eKW	Cooling Air Flow Rate		Ambient Capability*		Sound Pressure Levels (dBA) at 7m (23 ft)
		m³/s	cfm	°C	°F	100% Load
C13	350	8.5	-	57	135	75
	400	8.5	-	56	133	75
C15	350	10.4	22072	59	138	72
	400	10.4	22072	51	124	73
	450	10.4	22072	46	115	74
	500	12.5	26415	48	118	75
C18	550	8.1	17234	45	113	76
	600	8.1	17234	43	109	76
	650	12.7	26909	51	123	76
	700	12.7	26909	48	118	76
	750	12.7	26909	48	118	76



C13 / C15 / C18 Integral and Sub-Base Fuel Tanks

US Sourced
Diesel Generator Set
350 – 750 ekW 60 Hz

Picture shown may not represent actual package.

Features

- UL Listed for United States (UL 142) and Canada (CAN/ULC S601)
- Facilitates compliance with NFPA 30 code, NFPA 37 and 110 standards and CSA C282 code
- Dual wall
- Lockable fuel fill cap, 4” (101.6 mm) NPT
- Low fuel level warning standard, customer configurable warning or shutdown
- Primary tank leak detection switch in containment basin
- Tank design provides capacity for thermal expansion of fuel
- Fuel supply dip tube is positioned so as not to pick up fuel sediment
- Fuel return and supply dip tube is separated by an internal baffle to prevent immediate re-supply of heated return fuel
- Pressure washed with an iron phosphate solution
- Interior tank surfaces coated with a solvent-based thin-film rust preventative
- Heavy gauge steel gussets with internal lifting rings
- Primary and secondary tanks are leak tested at 20.7 kPa (3 psi) minimum
- Compatible with open packages and enclosures
- Gloss black polyester alkyd enamel exterior paint
- Welded steel containment basin (minimum of 110% of primary tank capacity)
- Direct reading fuel gauge with variable electrical output
- Emergency vents on primary and secondary tanks are sized in accordance with NFPA 30

Sub-Base

- The Sub-Base fuel tank mounts below the generator set wide base

Integral

- Integral diesel fuel tank is incorporated into the generator set base frame
- Robust base design includes linear vibration isolators between tank base and engine generator

Options

- Audio/visual fuel level alarm panel
- 5 gal (18.9 L) spill containment
- 5 gal (18.9 L) spill containment with fuel fill drop tube with in 6” (152 mm) from bottom of tank
- 5 gal (18.9 L) spill containment with overfill prevention valve and fuel fill drop tube with in 6” (152 mm) from bottom of tank
- ULC Listed 7.5 gal (28.4 L) spill containment with vent extensions, vent whistle, and drop tube facilitating compliance with CSA B139-09
- ULC Listed 7.5 gal (28.4 L) spill containment with overfill prevention valve, vent extensions, vent whistle and drop tube facilitating compliance with CSA B139-09

Integral & Sub-Base Fuel Tank Base Useable Capacities with Fuel Tank Dimensions & Weights

Integral - Width(W) 2014 mm (79.3 in)
Sub-base - Width(W) 2056 mm (81 in)
Integral* - Width(W) 2315 mm (91.2 in)
Sub-base*-Width(W) 2357 mm (92.7in)

Reference Mechanical Drawings

Sound Attenuated Enclosure

C13 Tank Design	Feature Code	Total Capacity		Useable Capacity		Tank Only						Overall Package Height with Tank			
						Dry Weight		Height 'H'		Length 'L'		Open		Enclosure	
		Liter	Gallon	Liter	Gallon	kg	lb	mm	in	mm	in	mm	in	mm	in
Integral	FTDW013	2646	699	2540	671	1569	3450	762	30.0	5461	215.0	NA	NA	2743	108.0
Sub-Base	FTDW005 / FTDW016	3941	1041	3876	1024	1659	3657	635	25.0	5550	218.5	NA	NA	2955	116.3
Sub-Base	FTDW006	6980	1844	6818	1801	2033	4483	889	35.0	6184	243.5	NA	NA	3209	126.3
Sub-Base	FTDW007	8339	2203	8244	2178	2292	5052	889	35.0	7074	278.5	NA	NA	3209	126.3
Sub-Base	FTDW011	2476	654	2435	643	1468	3236	635	25.0	3810	150.0	NA	NA	2955	116.3

C15 Tank Design	Feature Code	Total Capacity		Useable Capacity		Tank Only						Overall Package Height with Tank			
						Dry Weight		Height 'H'		Length 'L'		Open		Enclosure	
		Liter	Gallon	Liter	Gallon	kg	lb	mm	in	mm	in	mm	in	mm	in
Integral	FTDW001	1283	339	1262	333	1015	2237	635	25.0	4746	186.9	NA	NA	2619	103.0
Sub-Base	FTDW005 / FTDW016	3941	1041	3876	1024	1659	3657	635	25.0	5550	218.5	NA	NA	2955	116.3
Sub-Base	FTDW006	6980	1844	6818	1801	2228	4912	889	35.0	6184	243.5	NA	NA	3209	126.3
Sub-Base	FTDW011	2476	654	2435	643	1468	3236	635	25.0	3810	150.0	NA	NA	2955	116.3
Sub-Base	FTDW034	10887	2876	9899	2615	2847	6277	914	36	7747	305	NA	NA	3233	127.3

C18 Tank Design	Feature Code	Total Capacity		Useable Capacity		Tank Only						Overall Package Height with Tank			
						Dry Weight		Height 'H'		Length 'L'		Open		Enclosure	
		Liter	Gallon	Liter	Gallon	kg	lb	mm	in	mm	in	mm	in	mm	in
Integral	FTDW003	1446	382	1422	376	1015	2237	635	25.0	3814	150.1	NA	NA	2560	100.8
Integral*	FTDW030	2498	660	2381	629	1681	3703	762	30.0	4995	196.6	2670	105	2675	105.3
Integral*	FTDW031	5175	1367	4997	1320	2046	4510	762	30.0	6737	265.3	NA	NA	2675	105.3
Sub-Base	FTDW005 / FTDW016	3941	1041	3876	1024	1659	3657	635	25.0	5550	218.5	NA	NA	2905	114.3
Sub-Base	FTDW007	8339	2203	8244	2178	2150	4134	889	35.0	7074	278.5	NA	NA	3209	126.3
Sub-Base	FTDW011	2476	654	2435	643	1468	3236	635	25.0	3810	150.0	NA	NA	2905	114.3
Sub-Base*	FTDW032	10228	2702	9994	2640	2638	5816	889	35.0	7368	290	NA	NA	3132	123.3

*For Ratings 650, 700 &750 ekW only

Tanks with full electrical stub-up area include removable end channel. Tanks with RH stub-up include stub- up area directly below the circuit breaker or power terminal strips. Dimensions include weather-protective enclosure exhaust system.

Dual wall sub-base tanks are UL Listed and constructed in accordance with UL Standard for Safety UL 142, Steel Aboveground Tanks for Flammable and Combustible Liquids and Canada CAN/ULC S601, Standard for Shop Fabricated Steel Aboveground Horizontal Tanks for Flammable and Combustible Liquids.

Fuel tanks and applicable options facilitate compliance with the following United States NFPA Code and Standards:

NFPA 30: Flammable and Combustible Liquids Code
NFPA 37: Standard for the Installation and Use of Stationary Combustion Engines and Gas Turbines
NFPA 110: Standard for Emergency and Standby Power Systems

Fuel tanks and applicable options facilitate compliance with the following Canadian Standard and Code:
CSA C282 – Emergency Electrical Power Supply for Buildings
CSA B139-09 - Installation Code for Oil-Burning Equipment

The following sub-base fuel tanks meet Chicago code for containment and labelling:

FTDW005
FTDW008
FTDW011

©2021 Caterpillar
All rights reserved.
Materials and specifications are subject to change without notice.
The International System of Units (SI) is used in this publication.
CAT, CATERPILLAR, LET'S DO THE WORK, their respective logos, "Caterpillar Corporate Yellow" the "Power Edge" and Cat "Modern Hex" trade dress as well as corporate and product identity used herein, are trademarks of Caterpillar and may not be used without permission.

FUEL LEVEL ALARMS - FSS



CRITICAL LOW FUEL LEVEL SHUTDOWN AND LOW FUEL LEVEL ALARM

These options provide an alarm on low fuel level and a shutdown on critical low fuel level. This warning is reported by an indicator light on the control panel with an audible alarm also available as an option. This warning can additionally be relayed to a remote annunciator.

Note: Standard Fuel Fill, UL Rated Emergency-vent, Standard vent, Fuel Sender & Leak Detection Probe are included as standard on generator sets fitted with UL Listed fuel tanks.

CRITICAL HIGH FUEL LEVEL ALARM

This option provides an alarm on critical high fuel level. This warning is reported by an indicator light on the control panel with an audible alarm also available as an option. This warning can additionally be relayed to a remote annunciator.

Information contained in this publication may be considered confidential. Discretion is recommended when distributing.
Materials and specifications are subject to change without notice.

CAT, CATERPILLAR, LET'S DO THE WORK, their respective logos, "Caterpillar Corporate Yellow," the "Power Edge" and Cat "Modern Hex" trade dress as well as corporate and product identity used herein, are trademarks of Caterpillar and may not be used without permission.



Image shown may not reflect actual configuration

Fuel Level Gauge and Sender

The unit consists of a magnetically driven dial for direct reading with a snap fi t Hall Effect Module attached to the lens. This module sends an electrical signal to a remote fuel level monitor.

The module can provide ratiometric voltage output proportional to the liquid volume inside the tank.

Features

- A magnetic drive allows a signal from the float mechanism inside the tank to be transmitted through a solid bulkhead.
- The dial is designed to allow a second magnetic coupling. This is a coupling from the pointer magnet, through the sealed lens and into the Hall Effect Module.
- The magnetic connection of the Hall Effect sensor is more reliable than systems that depend on the sliding contact of variable resistor devices.
- Hall Effect is a solid state technology with no moving contacts. It counts on the fact that a magnet bends the path of electrons moving through a semiconductor. The bending of the electrons can be detected and converted into an electrical signal.
- The dial is able to provide an electrical output which can be utilized for remote monitoring of tank levels.
- The dial case is hermetically sealed by ultrasonic welding to melt and fuse the case into one solid piece. This keeps weather out, ensuring “no-fog” read ability while greatly extending mechanical life.
- The seal is a high reliability, no-gasket design.
- The plastic case is far more resistant to corrosion than any metal-cased version and is capable of withstanding broad variations in temperature. The lens and case are a special, UV stabilized plastic material.

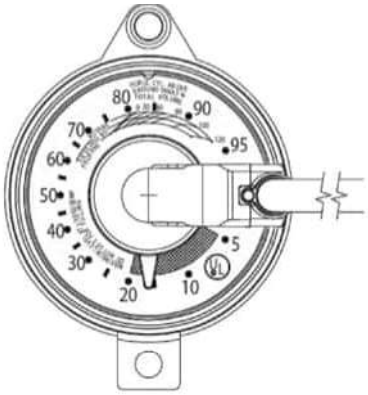

Remote-ready Dial, with Hall Effect Module

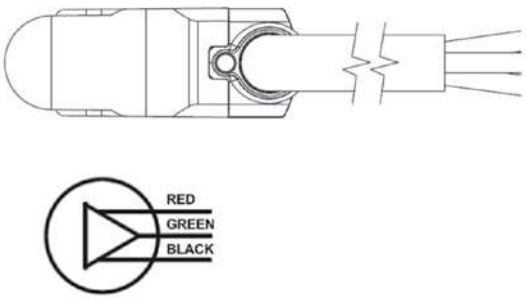

Hall Effect Module

Engine Controller



ADEM™ A4 Engine Controller

The ADEM™ A4 is the main Electronic Control Module (ECM) used on select diesel engines. The ADEM A4 provides a higher degree of control over a large number of combustion variables. The ADEM A4 is designed to control/interface Electronic Unit Injector (EUI) equipped engines. The ADEM A4 engine system is composed of the ADEM A4 ECM, control software, sensors, actuators, fuel injectors, and interface to the generator system. The prime benefit of an ADEM A4 engine system is to better control and maintain the particulate emissions, both steady state and transient, while improving engine performance.

Features

Reliable, Durable

All ADEM A4 controllers are designed to survive the harshest environments.

- Environmentally sealed, die-cast aluminum housing solates and protects electronic components from moisture and dirt contamination
- Rigorous vibration testing ensures product reliability and durability
- Accuracy maintained from –40°C to 85°C
- Electrical noise immunity to 100 volts / meter
- Internal circuits are designed to withstand shorts to + battery and – battery

Simple Servicing

Each ADEM A4 system works in combination with the Cat® ET service tool software to keep the engine operating at peak performance.

- Displays measured parameters
- Retrieves active and logged event code documenting abnormal system operation
- Performs calibrations and diagnostic tests
- Supports flash programming of new software into the ADEM A4 ECM

Self Diagnostics

Each ADEM A4 ECM has a full compliment of diagnostics. The ECM can detect faults in the electrical system and report those faults to the service technician for quick repair.

- Self-diagnostic capability pinpoints operational prob-lems in need of attention.

Advanced Features

- Enhanced performance from fuel injection timing and limiting
- Adjustable monitoring of vital engine parameters
- Programmable speed acceleration ramp rate
- Data link interfaces

Description

The ECM is housed in an environmentally sealed cast-ing. All wiring connections to the ECM are made using two sealed connectors: a single seventy-pin connector and a single one hundred twenty-pin connector.

Engine Speed Governing

Desired engine speed is calculated by the ECM and held within ±0.2 Hz for isochronous and droop mode. The ECM accounts for droop that is requested. The proper amount of fuel is sent to the injectors due to these calculations. The ECM also employs cooldown/shutdown strategies, acceleration delays on startup, acceleration ramp times and speed reference.

Fuel Limiting

Warm and cold fuel-air ratio control limits are con-trolled by the ECM. Electronic monitoring system derates, torque limit, and cranking limit, programmable torque scaling, and cold cylinder cutout mode are standard features.

Fuel Injection Timing

Master timing for injection is controlled by the ECM control. Temperature dependencies are accounted for in the fuel injection calculations.

Electronic Monitoring

Electronic monitoring of vital engine parameters can be programmed. Warning, derate, and shutdown event conditions may be customized by the user.

Information Management

The ECM stores information to assist with electronic troubleshooting. Active and logged diagnostic codes, active events, logged events, fuel consumption, engine hours, and instantaneous totals aid service technicians when diagnosing electronic faults and scheduling preventive maintenance.

Calibrations

Engine performance is optimized through injection timing. Auto/manual sensor calibrations are standard features.

On-Board System Tests

System tests are available to assist in electronic trou-bleshooting. These tests include: injector activation, injector cutout, and override of control outputs.

Data Link Interfaces

The ADEM A4 communicates with the EMCP via a dedicated communication network.

Electronic Sensing

The following sensing is available on the ADEM A4: oil pressure, fuel pressure, fuel temperature, atmospheric pressure, air inlet temperature, turbo outlet pressure, engine coolant temperature, engine speed, throttle, position, exhaust temperature, oil filter pressure differential, fuel filter pressure differential, air filter pressure differential and crankcase pressure.

Engine Controller

SPECIFICATIONS

Impervious to:

Salt spray, fuel, oil and oil additives, coolant, spray cleaners, chlorinated solvents, hydrogen sulfide and methane gas, and dust.

Input and output protection

All inputs and outputs are protected against short circuits to +battery and –battery

Input voltage range (24 VDC nominal)

18 to 32 VDC

Mounting

Engine mounted

Reverse polarity protected

Shock, withstands 20g

Temperature range

Operating: –40°C to 85°C (–40°F to 185°F)
Storage: –50°C to 120°C (–58°F to 248°F)

Vibration

Withstands 8.0g @ 24 to 2 kHz

Information contained in this publication may be considered confidential. Discretion is recommended when distributing. Materials and specifications are subject to change without notice.

CAT, CATERPILLAR, LET'S DO THE WORK, their respective logos, "Caterpillar Yellow," the "Power Edge" and Cat "Modern Hex" trade dress as well as corporate and product identity used herein, are trademarks of Caterpillar and may not be used without permission.

©2019 Caterpillar
All rights reserved.

ADAM-4572

1-port Modbus Gateway



RoHS COMPLIANT 2011/65/EU CE FCC

Features

- Supports 10/100 Mbps communication speeds
- Allows up to 8 clients to access field data simultaneously
- Supports popular HMI software with Modbus/TCP driver or OPC server
- Up to 3 Independent serial ports capacity if configured to RS-485 serial mode
- Provides auto-searching device ID Windows utility
- Surge protection for RS-485 and power line
- Automatic RS-485 data flow control
- Easy mounting on DIN-rail or panel
- Supports Modbus/ASCII, RTU Protocol to control devices

Specifications

Ethernet Communications

- **Compatibility** IEEE 802.3, IEEE 802.3u
- **Speed** 10/100 Mbps
- **Port Connector** 8-pin RJ45

Serial Communications

- **Port Type** RS-232/422/485
- **No. of Ports** 1
- **Port Connector** Plug-in terminal block
- **Data Bits** 7, 8
- **Stop Bits** 1, 2
- **Parity** None, Odd, Even, Mark, Space
- **Baud Rate** 50 bps ~ 921.6 kbps
- **Data Signals** RS-232: TxD, RxD, GND
  RS-422: TxD+, TxD-, RxD+, RxD-, GND
  RS-485: Data+, Data-, GND
- **• Protection** 15 KV ESD protection for all signals

Software

- **OS Support** 32-bit/64-bit Windows XP/Vista/7/8, Windows Server 2003/2008/2008 R2/2012, Windows CE 5.0, and Linux
- **Utility Software** Advantech EKI Device Configuration Utility
- **Operation Mode** Modbus/RTU master/slave mode, Modbus/ASCII master/slave mode

Mechanics

- **Dimensions (H x W x D)** 70 x 130 x 30 mm
- **Enclosure** ABS+PC with solid mounting hardware
- **Mounting** DIN-rail, stack, wall

General

- **Certifications** CE, FCC Part 15 Subpart B (Class A)
- **LED Indicators** System: Power, System Status
  LAN: Speed, Link/Active
  Serial: Tx, Rx

Power Requirement

- **Power Input** 10 ~ 30 V_{DC}
- **Power Consumption** 2.5W

Environment

- **Operating Temperature** -10 ~ 60°C (14 ~ 140°F)
- **Storing Temperature** -20 ~ 80° C (-4 ~ 176° F)
- **Operating Humidity** 5 ~ 95% RH

Ordering Information

- **ADAM-4572** 1-port Modbus Gateway

Dimensions

Unit: [mm]

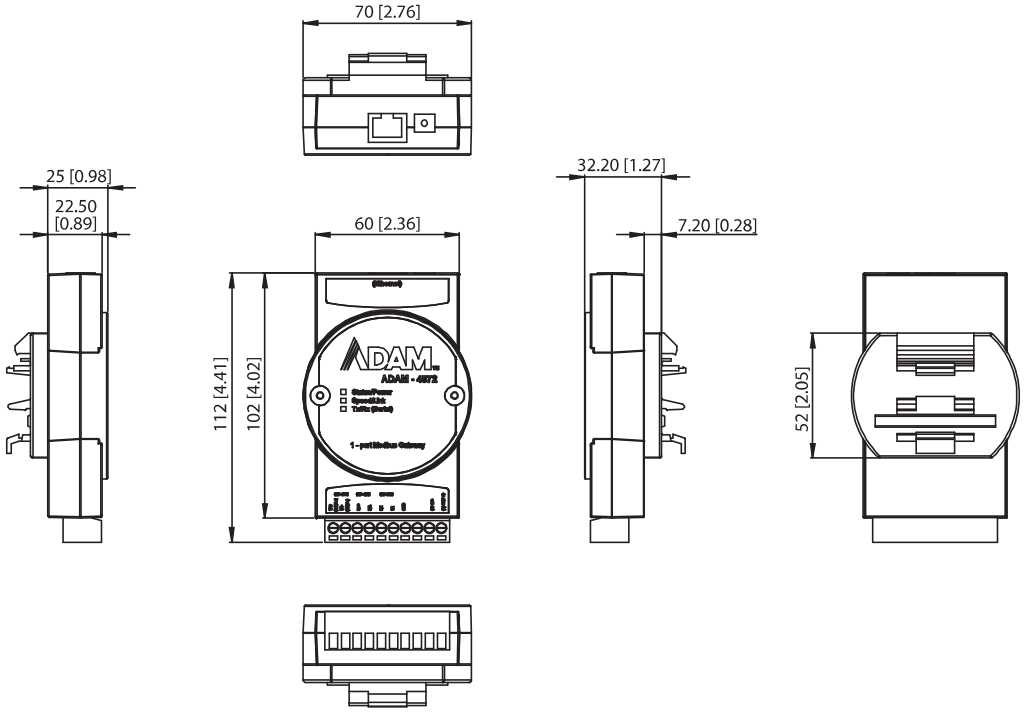

Panel Cut-out Dimensions: 70 x 102 x 25 mm (2.76" x 4.02" x 0.98)

Automatic Voltage Regulator

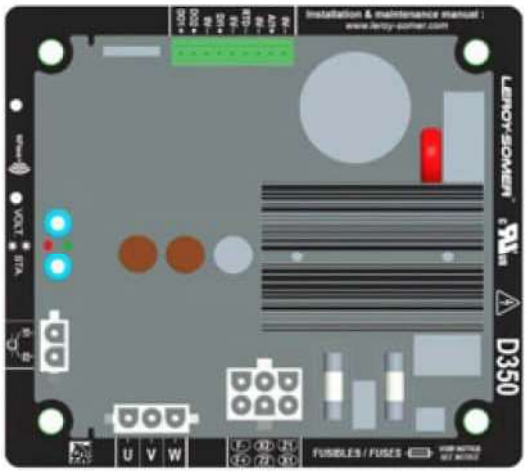

D350AVR

The D350, Digital Voltage Regulator is used to regulate alternators with a field current of less than 5 A in continuous operations, and 10 A maximum in the event of short-circuit for 10 seconds maximum.

Its design is in accordance with mounting in a generator terminal box or a control cabinet. It is required, at a minimum, to follow the local protection and safety standards, especially those specific to electrical installations for voltages of 300 VAC phase-to-neutral maximum.

NFLink™ configuration module

The D350 is equipped with NFC technology for communication and configuration purposes. The configuration module is placed over the two dedicated positioning holes on the plastic enclosure as shown below. Once the configuration is done, the NF Link must be removed as it is not supposed to be left on the D350 when it is in continuous operation.

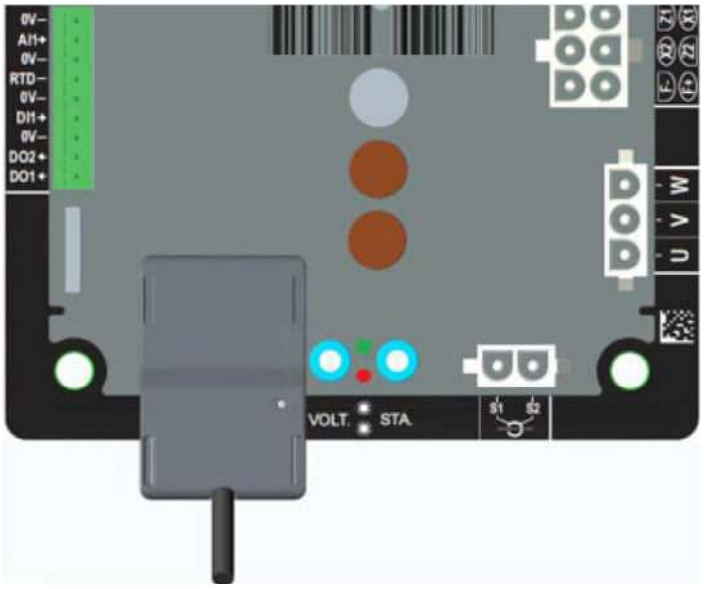

Technical Characteristics

D350 regulator can be used to perform the following functions:

Voltage regulation

- With or without reactive droop compensation (Reactive droop to allow parallel operation)
- With or without line droop compensation

Regulation of the field current, or manual mode, which allows direct control of the field current.

The D350 can also be used to:

- Adjust the reference for the regulation mode in progress, using an analogue input (0 – 10V and potentiometer)
- Monitoring of temperature sensor (Pt100 or CTP)
- Limit the minimum field current delivered to the exciter field
- Monitoring of the maximum stator current limit
- Loss of voltage sensing
- Withstand a sudden short-circuit for 10 seconds maximum in AREP, PMG
- Signals monitoring (events logger)
- 2 digital outputs for various trip, regulation mode and measurement data

Alternator voltage sensing:

- 3 phases without neutral, 2 phases or 1 phase with neutral
- Three-phase range 0 – 530 VAC
- Consumption < 2 VA

Stator current measurement with CT:

- Range 0 –1A or 0 – 5A
- Consumption < 2 VA

Power supply:

- 4 terminals for PMG, AREP, SHUNT
- Range 50 – 277 VAC
- Consumption max < 3000 VA

Field excitation:

- Rated 0 – 5A
- Short-circuit 10A max

Frequency:

- Range 10-100 Hz
- Regulation accuracy: +/-0.25% of the average of the three phases on a linear load, with harmonic distortion less than 5%
- Voltage adjustment range: 0 to 150% of the rated voltage
- Quadrature droop adjustment range: -20% to 20%
- Under frequency protection: integrated, adjustable threshold, slope adjustable from 0.5 to 3V/Hz in steps of 0.1 V/Hz
- Excitation ceiling: adjustable by configuration at 3 points
- Environment: ambient temperature from -40°C to +65°C, relative humidity of less than 95% non-condensing, mounted in a cabinet or in a terminal box

Easy Reg Advanced:

- All the D350 settings are entered/configured using the "EasyReg Advanced" software
- This program is only compatible with computers running WINDOWS® versions Windows 7 and Windows 10 operating systems

Dimensions:

- Height: 52.9 mm
- Width: 125 mm
- Length: 140 mm

Mounting:

- Holes spacing on the Length: 115 mm
- Holes spacing on the width: 100 mm

Weight:

- 0.45 kg

Conformity to standards:

- EMC: IEC 61000-6-2, IEC 61000-6-4
- Humidity: IEC 60068-1 and test in accordance with IEC 60068-2-14
- Dry heat: IEC 60068-2-2
- Damp heat: IEC 60028-2-30
- Cold: IEC 600068-2-1

D350 AVR and NFLink™ Dimensions



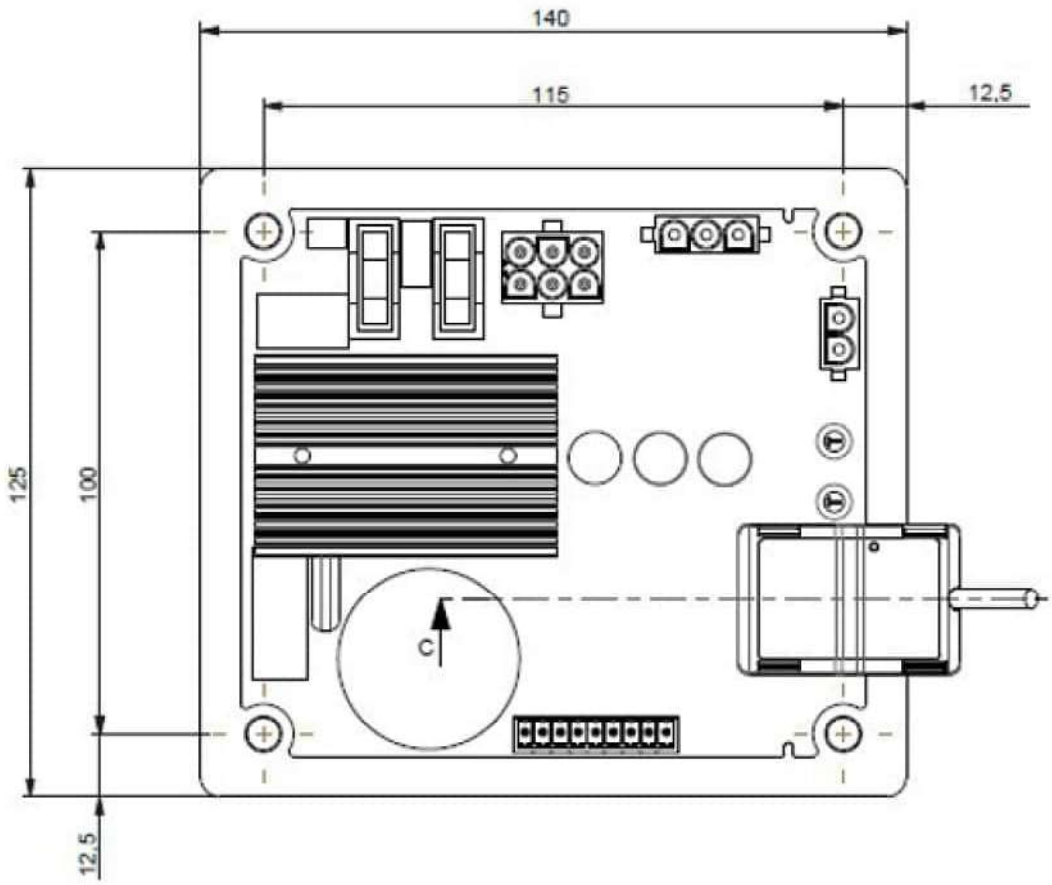

LET'S DO THE WORK.™

www.cat.com/electricpower
©2023 Caterpillar
All rights reserved.
Materials and specifications are subject to change without notice.
The International System of Units (SI) is used in this publication. CAT, CATERPILLAR, LET'S DO THE WORK, their respective logos, "Caterpillar Corporate Yellow", the "Power Edge" and Cat "Modern Hex" trade dress as well as corporate and product identity used herein, are trademarks of Caterpillar and may not be used without permission.

General and Functional Specifications*

- Conformity: ±3% at 5 VDC
- Operating temperature: -40° to 80°C (-40°F to 176°F)
- Accuracy: ±4% of full scale. (float gauge errors not included.)
- Repeatability: ±1%.
- Operational voltage range: 3.5 to 6.0 VDC
- Output voltage: ratiometric 10−90% of input voltage @ 10−90% volume
- Resolution – infinite
- Operating current: 4.5 mA
- Output current: ± 1 mA
- Hall Effect modules are UL classified as intrinsically safe for Class 1, Division 1, Groups C and D (hazardous locations)

Gauge Materials of Construction*

- Head – die cast aluminum.
- Center shaft, support tube, and float rod – tempered aluminum
- Gears, cross stud, and bearing – stainless steel
- Drive magnet – alnico
- Gear housing – acetal
- Float – nitrile rubber

Dial Materials of Construction*

- Crystal and case: polycarbonate.
- Dial – painted aluminum

*Materials and specifications are subject to change without notice. Ratings subject to change due to temperature and other environmental considerations.

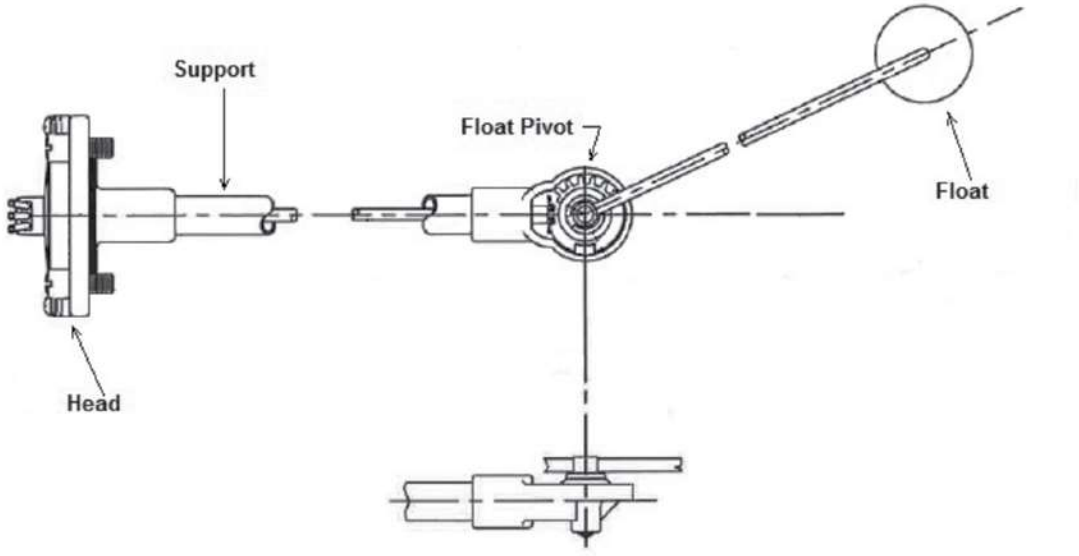

www.Cat-ElectricPower.com
©2015 Caterpillar
All rights reserved.

Materials and specifications are subject to change without notice. CAT, CATERPILLAR, their respective logos, “Caterpillar Yellow”, the “Power Edge” trade dress as well as corporate and product identity used herein, are trademarks of Caterpillar and may not be used without permission.

GCCP 1.2
Control Panel



Image shown may not reflect actual configuration.

GCCP 1.2 – Control Panel

GCCP 1.2 is an Auto Start Control Module suitable for a wide variety of diesel gen-set applications. Monitoring an extensive number of engine parameters, the modules will display warnings, shutdown and engine status information on the back-lit LCD screen, illuminated LEDs and remote PC.

Description

The controller is compatible with electronic (CAN) and non-electronic (magnetic pick-up/alternator sensing) engines and offer an extensive number of flexible inputs, outputs and extensive engine protections so the system can be easily adapted to meet the most demanding industry requirements.

The extensive list of features includes enhanced event and performance monitoring, remote communications & PLC functionality. The modules can be easily configured using a configuration suite PC software.

Full Range of Attachments

- Wide range of system expansion attachments, designed specifically to work with the GCCP controller
- Flexible packaging options for easy and cost effective installation

Benefits

- Hours counter provides accurate information for monitoring and maintenance periods
- User-friendly set-up and button layout for ease of use
- Multiple parameters are monitored & displayed simultaneously for full visibility
- The module can be configured to suit a wide range of applications for user flexibility
- PLC editor allows user configurable functions to meet user specific application requirements
- RS485 Communication port can be used for the Remote Monitoring Communication (Compatible with Cat PLG)

World Wide Product Support

- Cat dealers provide extensive pre and post sale support
- Cat dealers have over 1,600 dealer branch stores operating in 200 countries

Features

- 4-line back-lit LCD text display
- Multiple display languages
- Five-key menu navigation
- LCD alarm indication
- Customisable power-up text and images
- Data logging facility
- Internal PLC editor
- Protections disable feature
- Fully configurable via PC using USB & RS485 communication
- Front panel configuration with PIN protection
- Power save mode
- 3-phase generator sensing and protection
- Generator current and power monitoring (kW, kvar, kVA, pf) kW and kvar overload and reverse power alarms
- Over current protection
- Unbalanced load protection
- Breaker control via fascia buttons
- Fuel and start outputs configurable when using CAN Support for 0V to 10V & 4 mA to 20 mA sensors
- 8 Configurable digital inputs (3 available for Customer use)
- 8 Configurable digital outputs (5 available for Customer use)
- 4 Configurable analogue inputs (3 available for Customer use)
- CAN, MPU and alternator frequency speed sensing in one variant
- Real time clock
- Engine pre-heat and post-heat functions
- Engine run-time scheduler
- Engine idle control for starting & stopping
- Fuel usage monitor and low fuel level alarms
- 3 Configurable maintenance alarms
- MODBUS RTU & TCP support
- User configurable MODBUS pages

SPECIFICATIONS

DC SUPPLY

CONTINUOUS VOLTAGE RATING

8V to 35V continuous
5V for upto 1 minute

CRANKING DROPOUTS

Able to survive 0V for 100 mS, providing supply was at least 10V before dropout and supply recovers to 5V. This is achieved without the need for internal batteries.

LEDs and backlight will not be maintained during cranking

MAXIMUM OPERATING CURRENT

260 mA at 12V, 150 mA at 24V

MAXIMUM STANDBY CURRENT

145 mA at 12V, 85 mA at 24V

CHARGE FAIL/EXCITATION RANGE

0V to 35V

GENERATOR & MAINS (UTILITY) VOLTAGE RANGE

15V to 415 V AC (Ph to N)
26 V to 719 V AC (Ph to Ph)

MAGNETIC PICK-UP VOLTAGE RANGE

+/- 0.5 V to 70 V

FREQUENCY RANGE

10,000 Hz (max)

INPUTS

DIGITAL INPUTS A TO H

Negative switching

ANALOGUE INPUTS A TO D

Configurable as:

Negative switching digital input 0-10V sensor 4 mA to 20 mA Resistive Sensor

ANALOGUE INPUTS A TO C

Configurable as:

Negative switching digital input Resistive Sensor

OUTPUTS

OUTPUT A and B (FUEL & START)

15 A DC at supply voltage

AUXILIARY OUTPUTS C, D, E, F, G, H, I & J 2

A DC at supply voltage

DIMENSIONS

OVERALL

216 mm x 158 mm x 43 mm
8.5" x 6.2" x 1.5"

PANEL CUTOUT

184 mm x 137 mm
7.2" x 5.3"

MAXIMUM PANEL THICKNESS

8 mm
0.3"

OPERATING TEMPERATURE

-30°C to +70°C
-22°F to +158°F

STORAGE TEMPERATURE RANGE

-40°C to +85°C
-40°F to +185°F

STANDARDS

UL, cUL Listed
NFPA 70#
Electro-Magnetic Compatibility: BS EN 61000-6-2/6-4 Electrical Safety: BS EN 60950
Temperature: BS EN 60068-2-1, BS EN 60068-2-2
Vibration: BS EN 60068-2-6
Humidity: BS EN 60068-2-30, BS EN 60068-2-78 Shock: BS EN 60068-2-27
Degrees of protection provided by enclosures: BS EN 60529 Ingress Protection: IP65 – Front of module when installed into the control panel with the optional sealing gasket
Applicable codes and standards facilitate compliance to NFPA 70

Input Expansion Module

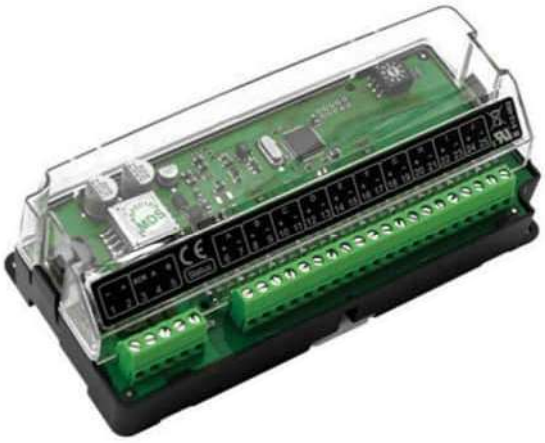

Picture shown may not reflect actual configuration.

Input Expansion Module

The Ratiometric Input Expansion module is used in conjunction with supported controllers to provide additional, flexible, input functionality. The module's ID switch is configurable from the module and the 10 inputs can be configured from within the 'host controller'.

The ratiometric inputs can be configured in a number of ways to connect to digital switches, resistive sensors, 0 – 10 V DC signals or 4 – 20 mA signals.

LED indication is provided for 'Power On' and 'Link Lost'.

Features

- Power On/Link Lost LED
- 10 inputs configurable for digital/resistive 4 – 20 mA and 0 – 10 V DC
- A maximum of 4 modules can be connected to 1 host control module to provide up to 40 additional configurable inputs
- Works up to 1.2 km (0.75 miles) from the host controller
- Terminal strip connection for quick and easy set-up

ENVIRONMENTAL TESTING STANDARD

ELECTRO-MAGNETIC COMPATIBILITY

BS EN 61000-6-2
EMC Generic Immunity Standard for the Industrial Environment
BS EN 61000-6-4
EMC Generic Emission Standard for the Industrial Environment

ELECTRICAL SAFETY

BS EN 60950
Safety of Information Technology Equipment, including Electrical Business Equipment

TEMPERATURE

BS EN 60068-2-1
Ab/Ae Cold Test -30 °C BS EN 60068-2-2
Bb/Be Dry Heat +70°C

VIBRATION

BS EN 60068-2-6
Ten sweeps in each of three major axes
5 Hz to 8 Hz @ +/-7.5 mm, 8 Hz to 500 Hz @ 2 gn

SHOCK

BS EN 60068-2-27
Three shocks in each of three major axes 15 gn in 11 Ms

HUMIDITY

BS EN 60068-2-30
Db Damp Heat Cyclic 20/55°C @ 95% RH 48 Hours
BS EN 60068-2-78
Cab Damp Heat Static 40°C @ 93% RH 48 Hours

DEGREES OF PROTECTION PROVIDED BY ENCLOSURES BS EN 60529

IP21

SPECIFICATION

CONTINUOUS VOLTAGE RATING

8 V to 35 V Continuous

CRANKING DROPOUTS

Able to survive 0 V for 50 mS, providing supply was at least 10 V before dropout and supply recovers to 5 V. This is achieved without the need for internal batteries. LEDs light will not be maintained during cranking.

MAXIMUM OPERATING CURRENT

292 mA at 12 V, 167 mA at 24 V mA at 24 V

MAXIMUM STANDBY CURRENT

101 mA at 12 V, 167 mA at 24 V

INPUTS

10 inputs configurable for digital/resistive (3k ohms) 4 – 20 mA and 0 – 10 V DC

DIMENSIONS OVERALL

165 mm x 76 mm x 49 mm

STROAGE TEMPERATURE RANGE

-40°C to + 85°C

LET'S DO THE WORK.™

www.cat.com/electricpower
©2023 Caterpillar
All rights reserved.
Materials and specifications are subject to change without notice.
The International System of Units (SI) is used in this publication. CAT, CATERPILLAR, LET'S DO THE WORK, their respective logos, "Caterpillar Corporate Yellow", the "Power Edge" and Cat "Modern Hex" trade dress as well as corporate and product identity used herein, are trademarks of Caterpillar and may not be used without permission.

LEHE2019-01 (03/23)

Output Expansion Module



Picture shown may not reflect actual configuration.

Output Expansion Module

Output relay expansion module for use with compatible control modules. The Output Expansion module has been designed to extend a host module's output capabilities.

A maximum of 10 Output Expansion modules can be connected to an individual module at any one time. All outputs are configurable via the host controller.

The module will work up to 1 KM (0.6miles) from the host control module.

Features

- Power On/Link Lost LED ID SWITCH
- 10 expansion modules can be connected to 1 host controller at a time
- 8 configurable relay contacts with LED indicators
- 4 Normally Open (N/O)
- 4 Change Over (C/O)
- Terminal strip connection for quick and easy set-up

ENVIRONMENTAL TESTING STANDARD

ELECTRO-MAGNETIC COMPATIBILITY

BS EN 61000-6-2
EMC Generic Immunity Standard for the Industrial Environment
BS EN 61000-6-4
EMC Generic Emission Standard for the Industrial Environment

ELECTRICAL SAFETY

BS EN 60950
Safety of Information Technology Equipment, including Electrical Business Equipment

TEMPERATURE

BS EN 60068-2-1
Ab/Ae Cold Test -30 °C BS EN 60068-2-2
Bb/Be Dry Heat +70°C

VIBRATION

BS EN 60068-2-6
Ten sweeps in each of three major axes
5 Hz to 8 Hz @ +/-7.5 mm, 8 Hz to 500 Hz @ 2 gn

SHOCK

BS EN 60068-2-27
Three shocks in each of three major axes 15 gn in 11 Ms

HUMIDITY

BS EN 60068-2-30
Db Damp Heat Cyclic 20/55 °C @ 95% RH 48 Hours BS EN 60068-2-78
Cab Damp Heat Static 40 °C @ 93% RH 48 Hours

SPECIFICATION

CONTINUOUS VOLTAGE RATING

8 V to 35 V Continuous

CRANKING DROPOUTS

Able to survive 0 V for 50 mS, providing supply was at least 10 V before dropout and supply recovers to 5 V. This is achieved without the need for internal batteries. LEDs and backlight will not be maintained during cranking.

MAXIMUM OPERATING CURRENT

325 mA at 12 V, 152 mA at 24 V

MAXIMUM STANDBY CURRENT

70 mA at 12 V, 32 mA at 24 V

AUXILIARY RELAY CONTACTS

2 Amp DC rated voltage free

DIMENSIONS OVERALL

165 mm x 76 mm x 49 mm
6.5" x 3" x 1.9"

LET'S DO THE WORK.™

www.cat.com/electricpower
©2023 Caterpillar
All rights reserved.
Materials and specifications are subject to change without notice.
The International System of Units (SI) is used in this publication. CAT, CATERPILLAR, LET'S DO THE WORK, their respective logos, "Caterpillar Corporate Yellow", the "Power Edge" and Cat "Modern Hex" trade dress as well as corporate and product identity used herein, are trademarks of Caterpillar and may not be used without permission.

LEHE2020-01 (03/23)

DSEGenset

DSE2152
ANALOGUE OUTPUT EXPANSION MODULE

The DSE2152 Analogue Output Expansion Module is used in conjunction with supported DSENet controllers to provide 6 additional outputs. The outputs can be individually configured as 0 to 10 V or 4 to 20 mA, via the 'host controller'.

LED indication is provided for 'Power On' and 'Link Lost'

The DSE2152 is designed to be mounted within a control panel, either on the panel DIN rail utilising the integral mounts, or chassis mounted, utilising the mounting holes.

Up to four DSE2152 modules can be linked together to provide up to 24 additional outputs. An ID switch is provided on the module for identification.

ENVIRONMENTAL TESTING STANDARDS

ELECTRO MAGNETIC COMPATIBILITY
BS EN 61000-6-2
EMC Generic Immunity Standard for the Industrial Environment
BS EN 61000-6-4
EMC Generic Emission Standard for the Industrial Environment

ELECTRICAL SAFETY
BS EN 60950
Safety of Information Technology Equipment, including Electrical Business Equipment

TEMPERATURE
BS EN 60068-2-1
Ab/Ae Cold Test -30 °C
BS EN 60068-2-2
Bb/Be Dry Heat +70 °C

VIBRATION
BS EN 60068-2-6
Ten sweeps in each of three major axes
5 Hz to 8 Hz at +/-7.5 mm, 8 Hz to 500 Hz at 2 gn

HUMIDITY
BS EN 60068-2-30
Db Damp Heat Cyclic 20/55 °C at 95% RH 48 Hours
BS EN 60068-2-78
Cab Damp Heat Static 40 °C at 93% RH 48 Hours

SHOCK
BS EN 60068-2-27
Three shocks in each of three major axes
15 gn in 11 mS

DEGREES OF PROTECTION PROVIDED BY ENCLOSURES
BS EN 60529
IP21

COMPREHENSIVE FEATURE LIST TO SUIT A WIDE VARIETY OF GEN-SET APPLICATIONS

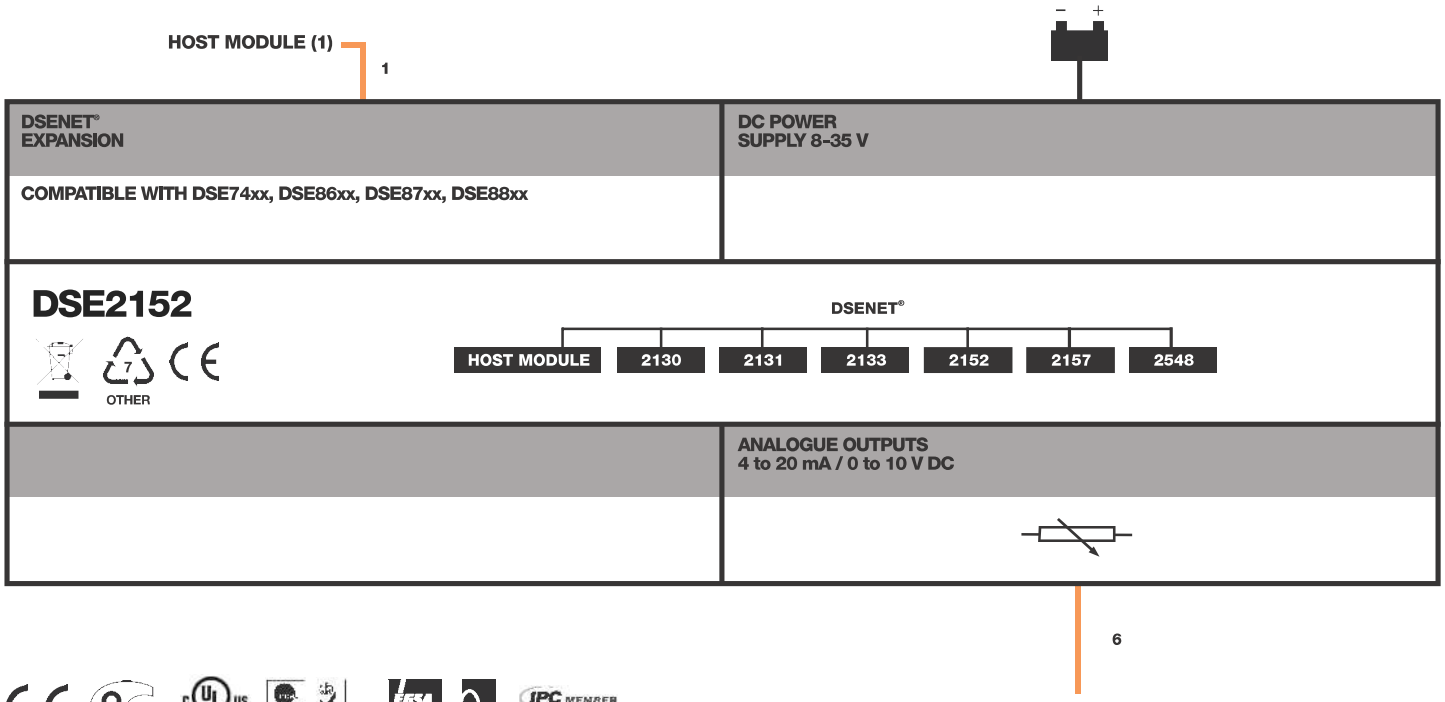

DSEGenset

DSE2152
ANALOGUE OUTPUT EXPANSION MODULE

DSE**2152**

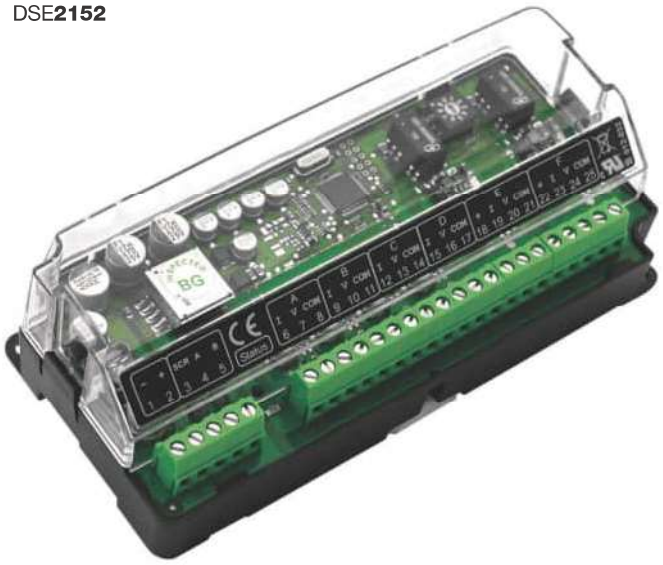

KEY FEATURES
- Analogue output expansion module for supported DSENet controllers
- 6 outputs configurable as 4 to 20mA (0 to 20mA) and 0 to 10 V DC
- Power On/Link Lost LED
- A maximum of 4 modules can be connected to 1 host control module to provide up to 24 additional configurable outputs
- Works up to 1.2 km (0.75 miles) from the host controller
- Terminal strip conection for quick and easy set up
- Simplified configuration using DSE PC Configuration Suite Software through host controller

KEY BENEFIT
- Ideal for applications where additional control monitoring is critical

SPECIFICATION

DC SUPPLY
8 V to 35 V continuous

CRANKING DROPOUTS
Able to survive 0 V for 50 mS, providing supply was at least 10 V before dropout and supply recovers to 5 V. This is achieved without the need for internal batteries. LEDs will not be maintained during cranking.

MAXIMUM OPERATING CURRENT
120 mA at 12 V, 60 mA at 24 V

OUTPUTS
OUTPUT A, B, C & D
Non-Isolated
Configurable As: 4 to 20 mA DC or
0 V to 10 V DC

OUTPUT E & F
Optional Isolation
Configurable As: 4 to 20 mA DC or
0 V to 10 V DC

DIMENSIONS
OVERALL
165 mm x 76 mm x 49 mm
6.5” x 3” x 1.9”

STORAGE TEMPERATURE RANGE
-40 °C to +85 °C
-40 °F to +185 °F

OPERATING TEMPERATURE RANGE
-30°C to +70°C
-22 °F to +158 °F

RELATED MATERIALS

TITLE	PART NO’S
DSE2152 Installation Instructions	053-134
DSE2152 Operator Manual	057-141
DSE7410/20 Data Sheet	055-108
DSE8610 Data Sheet	055-083
DSE8620 Data Sheet	055-099
DSE8660 Data Sheet	055-086
DSE8710 Data Sheet	055-184
DSE8760 Data Sheet	055-185
DSE8810 Data Sheet	055-116
DSE8860 Data Sheet	055-139

DEEP SEA ELECTRONICS PLC UK
Highfield House, Hunmanby Industrial Estate, Hunmanby YO14 0PH
TELEPHONE +44 (0) 1723 890099 **FACSIMILE** +44 (0) 1723 893303
EMAIL sales@deepseaplc.com **WEBSITE** www.deepseaplc.com

DEEP SEA ELECTRONICS INC USA
3230 Williams Avenue, Rockford, IL 61101-2668 USA
TELEPHONE +1 (815) 316 8706 **FACSIMILE** +1 (815) 316 8708
EMAIL sales@deepseausa.com **WEBSITE** www.deepseausa.com

Deep Sea Electronics Plc maintains a policy of continuous development and reserves the right to change the details shown on this data sheet without prior notice. The contents are intended for guidance only.

Registered in England & Wales No.01319649
VAT No.316923457

Annunciators



Picture shown may not reflect actual configuration.

Local Annunicator Module

It is an LED expansion module that can be used with compatible control modules. The module has been designed to display a maximum of eight individual LED indications up to a maximum distance of 1 KM (0.6 miles).

The Annunciator will consist of two modules to provide a 16 Channel Fault annunciation.

It is presented in a vertical enclosure. It includes an alarm sounder that is triggered when the host controller detects an alarm condition. The alarm can be muted using the front push button.

The Panels will be fitted with removable label cards which can be used to identify the standard NFPA alarms if desired.

It includes individual LEDs for each channel and a 'Power On' LED that flashes when the link with the host controller is lost.

Features

- The Local annunciator has an integral Sounder/Horn
- Eight configurable LEDs (per module)
- Works up to 1 KM (0.6 miles) from the host controller
- A single controller can support five Caterpillar configured remote annunciator control boxes

ENVIRONMENTAL TESTING STANDARD

ELECTRO-MAGNETIC COMPATIBILITY

BS EN 61000-6-2
EMC Generic Immunity Standard for the Industrial Environment
BS EN 61000-6-4
EMC Generic Emission Standard for the Industrial Environment

ELECTRICAL SAFETY

BS EN 60950
Safety of Information Technology Equipment, including Electrical Business Equipment

TEMPERATURE

BS EN 60068-2-1
Ab/Ae Cold Test -30 °C BS EN 60068-2-2
Bb/Be Dry Heat +70°C

VIBRATION

BS EN 60068-2-6
Ten sweeps in each of three major axes
5 Hz to 8 Hz @ +/-7.5 mm, 8 Hz to 500 Hz @ 2 gn

SHOCK

BS EN 60068-2-27
Three shocks in each of three major axes 15 gn in 11 Ms

HUMIDITY

BS EN 60068-2-30
Db Damp Heat Cyclic 20/55 °C @ 95% RH 48 Hours
BS EN 60068-2-78
Cab Damp Heat Static 40 °C @ 93% RH 48 Hours

DEGREES OF PROTECTION PROVIDED BY ENCLOSURES BS EN 60529

IP65 – Front of module when installed into the control panel with the supplied sealing gasket.

SPECIFICATION

CONTINUOUS VOLTAGE RATING

8 V to 35 V Continuous

CRANKING DROPOUTS

Able to survive 0 V for 50 mS, providing supply was at least 10 V before dropout and supply recovers to 5 V. This is achieved without the need for internal batteries. LEDs and backlight will not be maintained during cranking.

MAXIMUM OPERATING CURRENT

112 mA at 12 V, 53 mA at 24 V

MAXIMUM STANDBY CURRENT

74 mA at 12 V, 35 mA at 24 V

DIMENSIONS OVERALL

355 mm x 369 mm x 90 mm
13.6" x 14.5" x 3.5"

PANEL CUT-OUT

286 mm x 326 mm x 93 mm
11.2" x 12.8" x 3.6"

MAXIMUM PANEL THICKNESS

8 mm
0.3"

LET'S DO THE WORK.™

www.cat.com/electricpower
©2023 Caterpillar
All rights reserved.
Materials and specifications are subject to change without notice.
The International System of Units (SI) is used in this publication. CAT, CATERPILLAR, LET'S DO THE WORK, their respective logos, "Caterpillar Corporate Yellow", the "Power Edge" and Cat "Modern Hex" trade dress as well as corporate and product identity used herein, are trademarks of Caterpillar and may not be used without permission.

LEHE2021-01 (03/23)

CATERPILLAR®

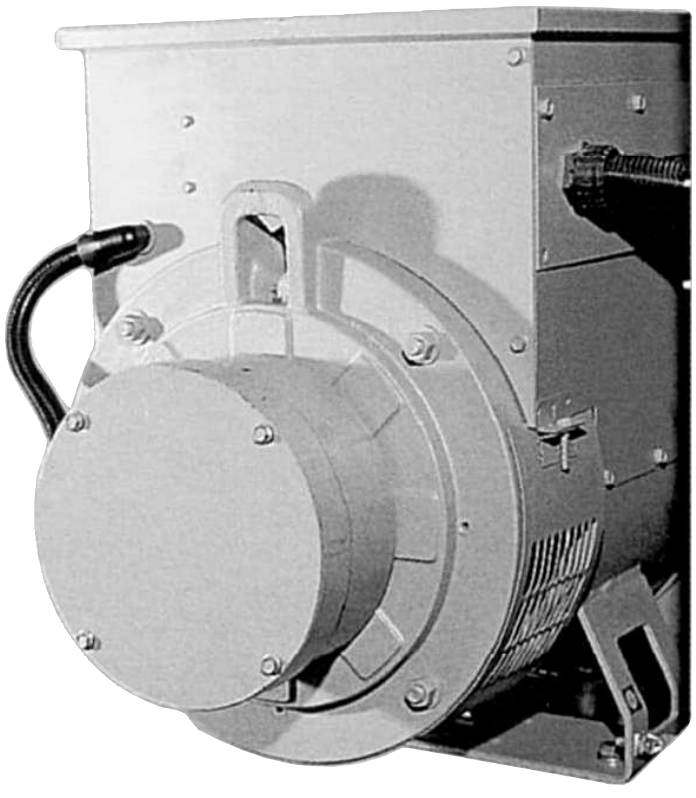

AVR12 – PERMANENT MAGNET GENERATOR

The permanent magnet generator (PMG) option upgrades the excitation system of the generator from the standard self-excited system to a separately-excited system. The PMG couples to the non-drive end of the generator and provides an independent source of excitation power that ensures initial voltage build-up. The PMG improves the voltage response of the generator during transient load application, such as motor starting, and provides a sustained short-circuit current for the operation of protective devices. Isolation of the excitation power ensures that regulation is not affected by non-linear distorting loads.

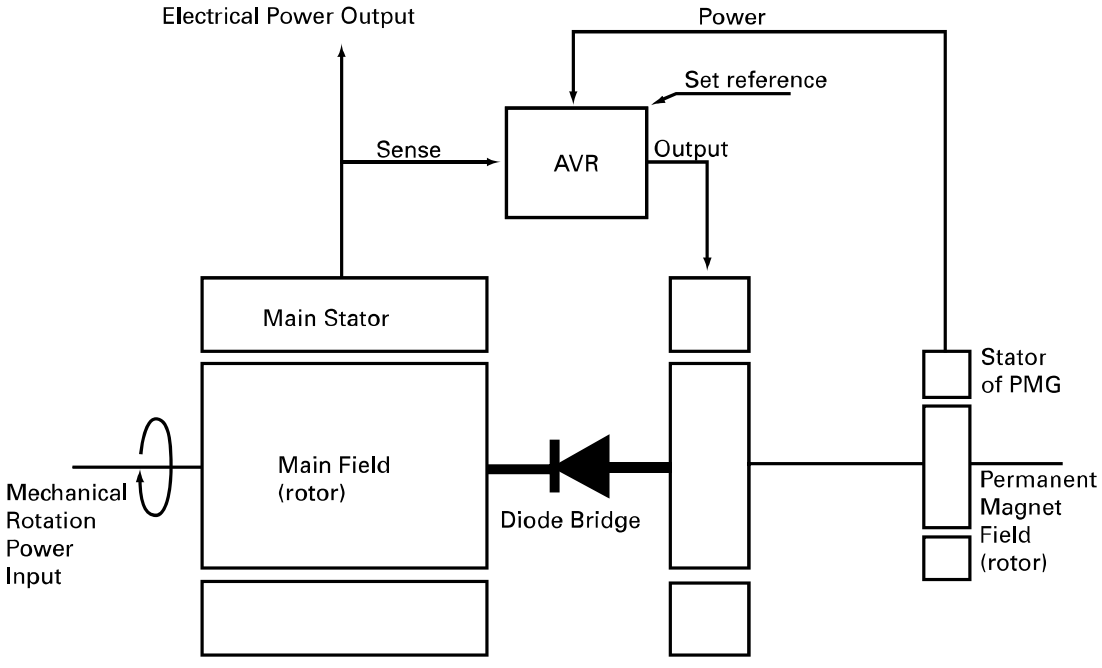

BLOCK DIAGRAM OF PMG

Market: N. America

LEHE4015 (01-05)

www.cat-ElectricPower.com

© 2005 Caterpillar
All Rights Reserved.
Printed in U.S.A.

Circuit Breakers



Moulded Case Circuit Breakers:

100 A – 3000 A
200 kW – 750 kW Gensets

Features

- 100% UL Listing
- Electronic Trip Units
- Double insulation
- Clear indication of breaker status
- Can be used in normal operation in an ambient of –25°and+70° C
- Auxiliary contacts available
- Insulating case constructed from fiberglass reinforced synthetic resin
- Anti-corrosion treatment on all metal parts
- Optional 2 or 3 Circuit Breakers

Conformity with International Standards

Circuit Breakers have been designed to comply with these major standards:

- UL 489
- CSA22.2
- IEC 60947-2
- NEMA AB1

C9, C13, C15, C18 Circuit Breakers

Manually Operated Circuit Breakers

Current (A)	Frame	Number of Poles	Interrupting Ratings (kA ms)			Trip Unit	(Lugs) Cable Size Range / Phase	Auxilliary Options
			240V	480V	600V			
100	H	3	65	35	18	Electronic LSI	8-3/0 AWG	Form C (1 NO + 1 NC) Shunt Trip 24 VDC
250	J	3	65	35	18		(2) 3/0 – 250 kcmil	
400	XT5	3	65	35	18	Electronic LS/I (S or I) or LSI	(2) 2/0 – 500 kcmil	1 Form C + 1 Bell Alarm 60 VAC/VDC Shunt Trip 24 VDC
600	XT6	3	65	35	20		(3) 2/0 – 400 kcmil	
800	XT6	3	65	35	20		(3) 2/0 – 400 kcmil	
1200	XT7	3	65	50	25		(4) 4/0 – 500 kcmil	1 Form C + 1 Bell Alarm Shunt Trip 24 VAC/VDC
1600	T8	3	65	35	18	Electronic LSI	BUS BAR	Form C (1 NO + 1 NC) Shunt Trip 24 VDC
2000	T8	3	65	35	18		BUS BAR	
2500	T8	3	65	35	18		BUS BAR	
3000	T8	3	65	35	18		BUS BAR	

Electrically Operated Circuit Breakers

Current (A)	Frame	Number of Poles	Interrupting Ratings (kA ms)			Trip Unit	(Lugs) Cable Size Range / Phase	Auxilliary Options
			240V	480V	600V			
800	XT7M	3	65	50	25	Electronic LSI	(4) 4/0 – 500 kcmil	2 Form C + 1 Bell Alarm 24 VDC
1200	XT7M	3	65	50	25	Electronic LSI	(4) 4/0 – 500 kcmil	2 Form C + 1 Bell Alarm 24 VDC
2000	T 8M-S	3	125	125	100	Electronic LSI	BUS BAR	2 Form C + 1 Bell Alarm 24 VDC
3000	T 8M-S	3	125	125	100	Electronic LSI	BUS BAR	2 Form C + 1 Bell Alarm 24 VDC

L-I Mode

- Long Time / Overload Protection, "L" has an adjustable trip threshold and adjustable time delay.
- Instantaneous Short Circuit Protection, "I" has an adjustable short circuit trip threshold and once exceeded will cause the circuit breaker to trip instantaneously.

L-S Mode

- Long Time / Overload Protection, "L" has an adjustable trip threshold and adjustable time delay.
- Short Circuit Protection, "S" has an adjustable short circuit trip threshold and adjustable time delay if necessary for coordinating with downstream loads.
- Instantaneous Short Circuit Protection, "I" is still included, but the threshold level is not adjustable and exists at a predetermined level.

Electronic L-S-I Trip Units

- Long Time/Overload Protection, "L" has an adjustable trip threshold and adjustable time delay.
- Short Circuit Protection, "S" has an adjustable short circuit trip threshold and adjustable time delay if necessary for coordinating with downstream loads.
- Instantaneous Short Circuit Protection, "I" has an adjustable short circuit trip threshold and once exceeded will cause the circuit breaker to trip instantaneously.

Circuit Breakers

Single Breaker Options (250 – 3000A)

Model	Current (A)	Operation
C9	100	Manually Operated
C9	250	Manually Operated
C9	400	Manually Operated
C9 , C13 , C15 , C18	600	Manually Operated
C9 , C13 , C15 , C18	800	Manually Operated or Electrically Operated
C9 , C13 , C15 , C18	1200	Manually Operated or Electrically Operated
C13 , C15 , C18	1600	Manually Operated
C15 , C18	2000	Manually Operated or Electrically Operated
C18	2500	Manually Operated
C18	3000	Manually Operated or Electrically Operated

Multiple Breaker Options

Model	Main Breaker Box		Auxiliary Box
	1st Breaker (Amps) Manually Operated	2nd Breaker (Amps) Manually Operated	Breaker (Amps) Manually Operated
C9 , C13 , C15 , C18	100	100, 250, 400, 600, 800, or 1200	3rd Breaker: 100, 250 or 400 (Not availabe if 1st & 2nd Breaker = 1200A)
C9 , C13 , C15 , C18	250		
C9 , C13 , C15 , C18	400		
C9 , C13 , C15 , C18	600		
C9 , C13 , C15 , C18	800		
C9 , C13 , C15 , C18	1200		
C13 , C15 , C18	1600	Not Available	2nd Breaker: 100, 250 or 400
C15 , C18	2000		
C18	2500		
C18	3000		

XT7 – XT7 M Ekip Dip LSI
L-S-I Functions

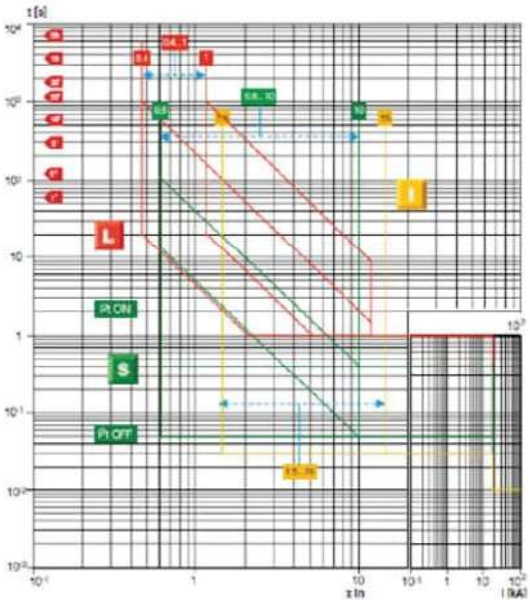

XT7 – XT7 M Ekip Dip LS/I
L-I Functions

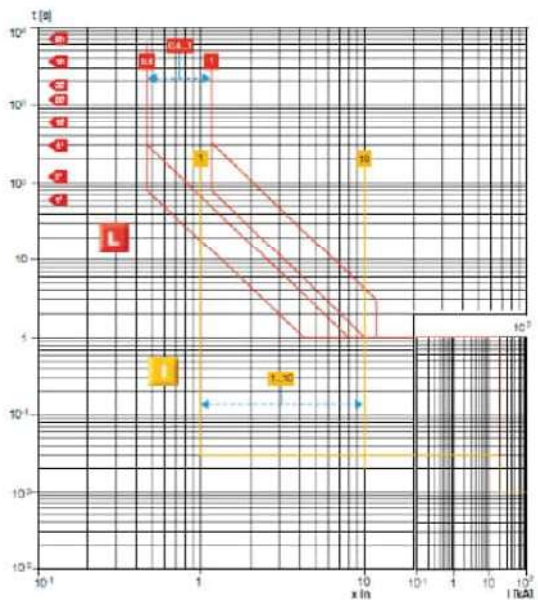

Figure 9

XT7 – XT7 M Ekip Dip LS/I
L-S Functions

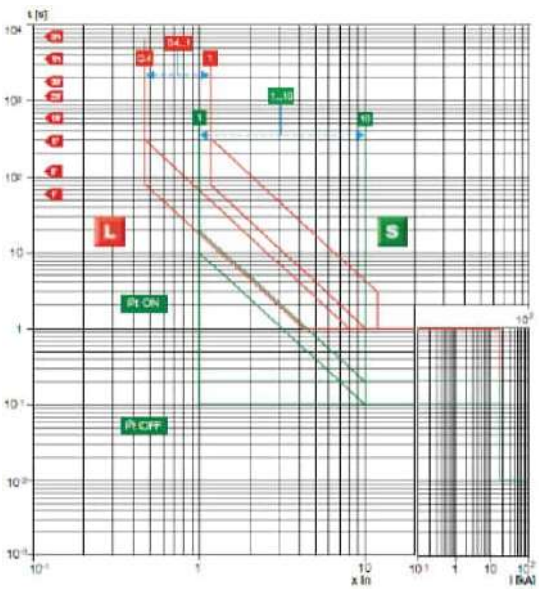

Figure 10

CATERPILLAR®

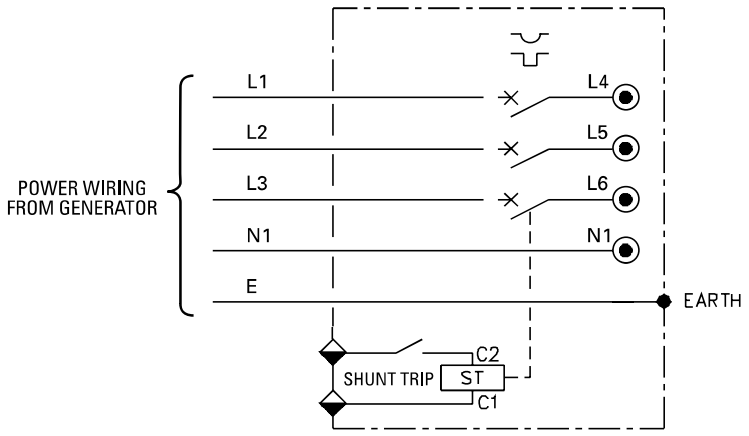

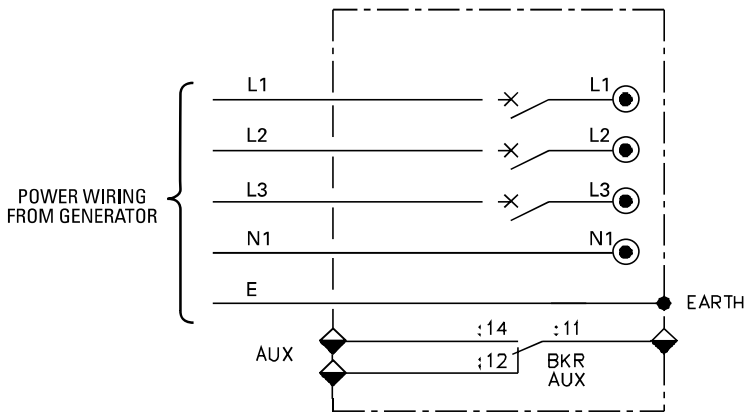

BREAKER BOX TERMINAL
POWER CONNECTION

AUX – AUXILIARY CONTACTS SHT2 – 12/24 V SHUNT TRIP

Option SHT2 adds a DC operated shunt trip which can be used to automatically open the circuit breaker upon activation of a generator set shut down signal from the generator set control panel, or from a remote signal (supplied by others).

Option AUX adds an auxiliary changeover switch which can be used for remote indication of the circuit breaker status.

Market: N. America

LEHE4009 (01-05)

Information contained in this publication may be considered confidential.
Discretion is recommended when distributing.
Materials and specifications are subject to change without notice.

www.cat-ElectricPower.com

© 2005 Caterpillar
All Rights Reserved.
Printed in U.S.A.

125 Amp Load Center



Image shown may not reflect actual package.

SPECIFICATIONS

Line Rated Current	125 A
Number of spaces	8
Number of circuits	16
Number of tandem circuit breakers	8
System Voltage	120/240 V AC
NEMA degree of protection	NEMA 3R outdoor
Electrical connection	Lugs
Wiring configuration	3-wire
Material	Tin plated aluminium busbar
Enclosure material	Galvannealed steel
Cover finish	Gray baked enamel
Product certifications	UL Listed

www.Cat-ElectricPower.com
©2016 Caterpillar
All rights reserved.

Materials and specifications are subject to change without notice.
CAT, CATERPILLAR, their respective logos, “Caterpillar Yellow”,
the “Power Edge” trade dress as well as corporate and product identity used
herein, are trademarks of Caterpillar and may not be used without permission.



Image shown may not reflect actual configuration.

20A Tamper-Resistant, Weather-Resistant GFCI Receptacles

Features and Benefits

- Automatically tests the GFCI every time the reset button is pushed in. The GFCI will not reset if the GFCI circuit is not functioning properly.
- By blocking reset of the GFCI if protection has been compromised, SmartLockPRO reduces the possibility of end-users incorrectly assuming that a reset GFCI outlet is providing ground fault protection when it actually is not.
- A line-load reversal diagnostic feature is provided which prevents the GFCI from being reset and stops power from being fed to the GFCI receptacle face or through to downstream devices. A green LED indicator on the GFCI's face also illuminates to alert the installer to the line-load wiring reversal.

Weather-Resistant GFCIs

- Meet UL 498 requirements for weather-resistant receptacles.

Tamper-Resistant GFCIs

- Shutter mechanism inside the receptacle blocks access to the contacts unless a two-prong plug is inserted, helping ensure foreign objects will be locked out.

Product Features

- Grounding: GFCI ground fault
- Feature: Weather and tamper-resistant
- Amperage: 20 Amp
- Voltage: 125 Volt
- NEMA: 5-20R
- Trip Level: Class A, 5mA plus or minus 1mA
- Pole: 2
- Wire: 3
- Color: White

Standards and Certifications

- NEMA: WD-6
- ANSI: C-73
- UL498: File E13399
- CSA C22.2 No. 42: File LR-57811
- NOM: 057
- UL 943: File E48380

Receptacles contained in a weather resistant box and in-use cover.



www.Cat-ElectricPower.com
©2016 Caterpillar
All rights reserved.

Materials and specifications are subject to change without notice.
CAT, CATERPILLAR, their respective logos, "Caterpillar Yellow", the "Power Edge" trade dress as well as corporate and product identity used herein, are trademarks of Caterpillar and may not be used without permission.



Image shown may not reflect actual package.

LED Lights

Features

AC/DC Lighting Kit

- Capable of AC and DC operation with provided selector switch
- DC operation has a 60-minute timer switch to limit battery drain
- AC operation is enabled by transformer
- Low voltage, low energy circuit and operation
- Installation includes one single LED light.

Technical Data	
Theoretical Lumens Output	1600 lm
Operational Lumens Output	1000 lm
Color Temperature	5700 K
Lens	PC
Body	Aluminum
Weight	0.6 kg
IP Rating	IP68, IP6K9K
EMC	CISPR 25 Class 3, EN 12895, ISO 13766, ISO 14982, ISO 7637-2
Operating Temperatures	-40°C to +85°C (Overheat protected)

www.Cat-ElectricPower.com
©2022 Caterpillar
All rights reserved.

CAT, CATERPILLAR, LET'S DO THE WORK, their respective logos, "Caterpillar Corporate Yellow", the "Power Edge" and Cat "Modern Hex" trade dress as well as corporate and product identity used herein, are trademarks of Caterpillar and may not be used without permission.



Image shown may not reflect actual package.

Pump Style Jacket Water Heater

Single Phase 2500 Watts Pump style jacket water heater is a complete coolant preheater.
It features an integrated pump that combines the benefits of forced circulation with a compact design that can mount to a variety of small engine applications. Forced circulation of the coolant delivers uniform heating throughout the entire engine, extends element life and offers a significant reduction in electrical consumption.

UL Listed , ULc Listed
240V
Installation provided with shut-off valves

www.Cat-ElectricPower.com
©2016 Caterpillar
All rights reserved.

Materials and specifications are subject to change without notice.
CAT, CATERPILLAR, their respective logos, “Caterpillar Yellow”, the “Power Edge” trade dress as well as corporate and product identity used herein, are trademarks of Caterpillar and may not be used without permission.

AIR CLEANERS

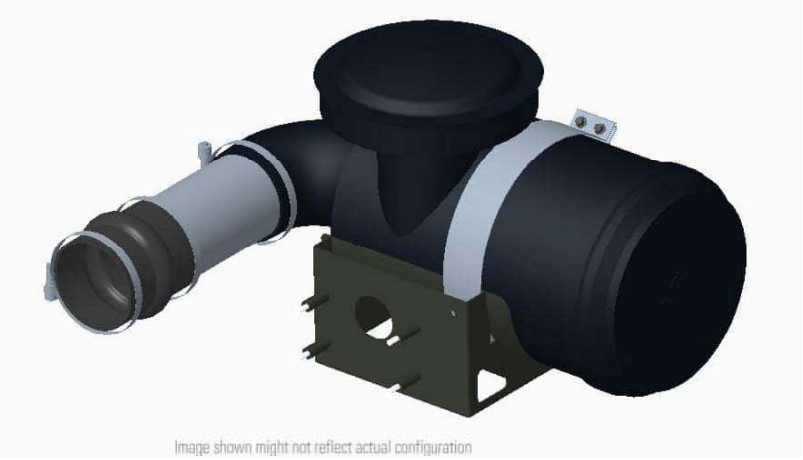

Image shown might not reflect actual configuration

AIR CLEANERS FOR C13/C15/C18 ENGINES

GENERAL DESCRIPTION

Air Cleaner reduce contaminants flowing into the air intake system, provide a high level of Engine protection from harmful contaminants and increase engine performance and fuel efficiency.

Dual element air cleaners provide additional protection for the Engine

FEATURES

- Radial Seal Technology
- Easy to read CAT filter service indicator with manual reset
- Standard Yellow Media
- Constant torque clamps
- Engine rear mounted filters with easy access to service filter to open and enclosed Gensets
- Air filters Designed for 500 hrs of service*
  *based on dust Concentration levels

Feature Code	Engine model	Dust Environment	Industry	Element	Housing
Dust Concentration level - 1-5mg/m3					
STD AIR	C13, C15, C18	Standard Duty	Factory, Office	Non-Canister	N-A
Dust Concentration level - 5-10mg/m3					
ACLSS04	C13, C15	Medium Duty	Construction, Factory	Single Element	Radial Seal, Metal Body
ACLSS05	C18	Medium Duty	Construction, Factory	Single Element	15" Radial Seal, Metal Body
ACLSS05	C18 PD 50 Hz	Medium Duty	Construction, Factory	Single Element	2off PowerCore Glass Filled Polypropylene Housing
ACLSS06	C18 60HZ	Medium Duty	Construction, Factory	Single Element	18" Radial Seal, Metal Body
ACLSS06	C18 PD 60 HZ	Medium Duty	Construction, Factory	Single Element	2off PowerCore Glass Filled Polypropylene Housing

AIR CLEANERS

Feature Code	Engine model	Dust Environment	Industry	Element	Housing
Dust Concentration level - 10-15mg/m3					
ACLDE23	C13, C15	Heavy Duty	Heavy Construction	Dual Element	Radial Seal, Metal Body
ACLDE24	C18 50HZ	Heavy Duty	Heavy Construction	Dual Element	15" Radial Seal, Metal Body
ACLDE24	C18PD 50 HZ	Heavy Duty	Heavy Construction	Dual Element	2off PowerCore Glass Filled Polypropylene Housing
ACLDE25	C18 60HZ	Heavy Duty	Heavy Construction	Dual Element	18" Radial Seal, Metal Body
ACLDE25	C18PD 60HZ	Heavy Duty	Heavy Construction	Dual Element	2off PowerCore with Pre-Cleaner Glass Filled Polypropylene Housing

- ACLHD26: Heavy Duty Air cleaner.
  Requires: 650-750 kW Sound Attenuated Enclosure
  Not for use with: Open Set.

www.Cat.com/electricpower
©2019 Caterpillar All rights reserved. Materials and specifications are subject to change without notice. The International System of Units (SI) is used in this publication. CAT, CATERPILLAR, their respective logos, "Caterpillar Yellow", the "Power Edge" and Cat "Modern Hex" trade dress as well as corporate and product identity used herein, are trademarks of Caterpillar and may not be used without permission.



Sample isolator

VIB4 Seismic Vibration Isolators (Zone 4)

For regions where seismic tremors are experienced, this option can be used in place of the standard anti-vibration mounting arrangement. These seismic zone 4 vibration isolators are designed to withstand the high shear forces that can arise under such seismic activity as per the 1994 Uniform Building Code. Isolators are positioned between the engine/generator mounts and the generator set base frame. The vibration isolators are matched to ensure minimal oscillation levels during generator set operation.

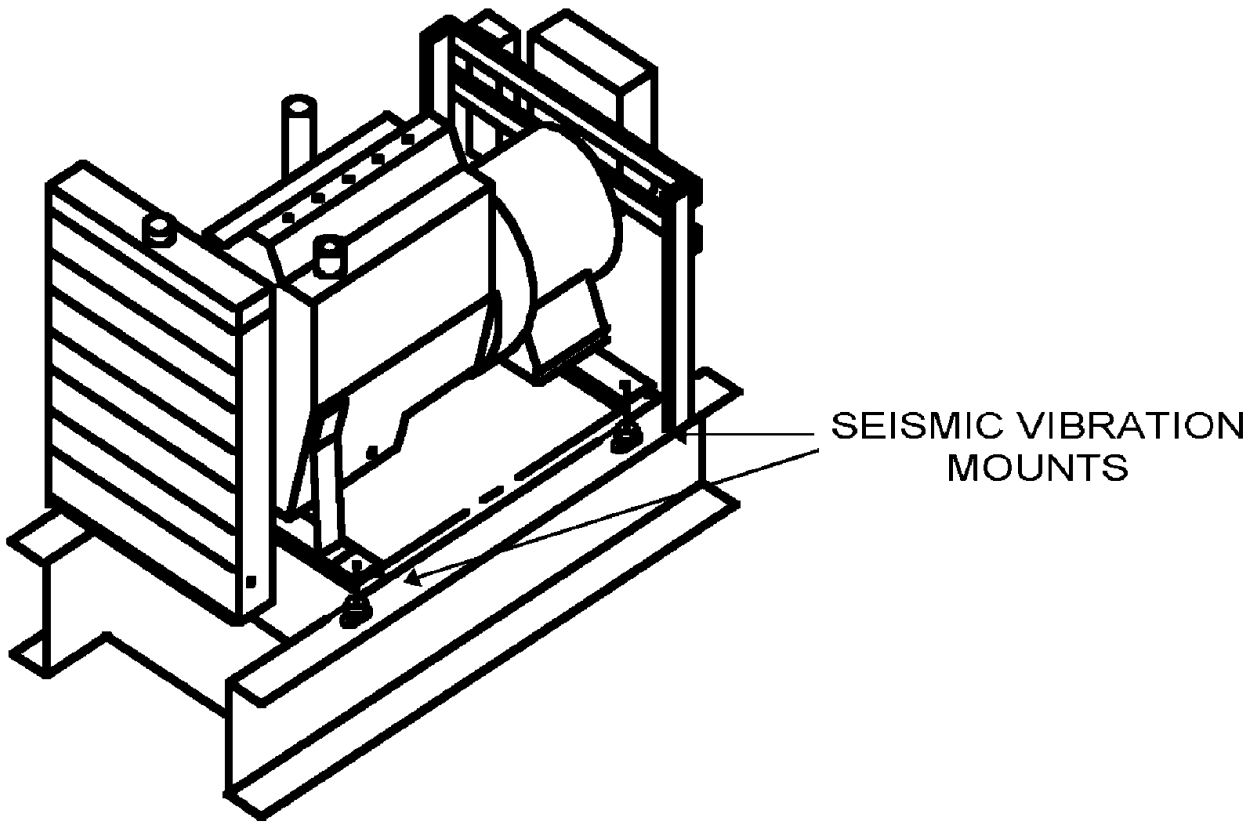

LEHE4004-02

Load vs Deflection

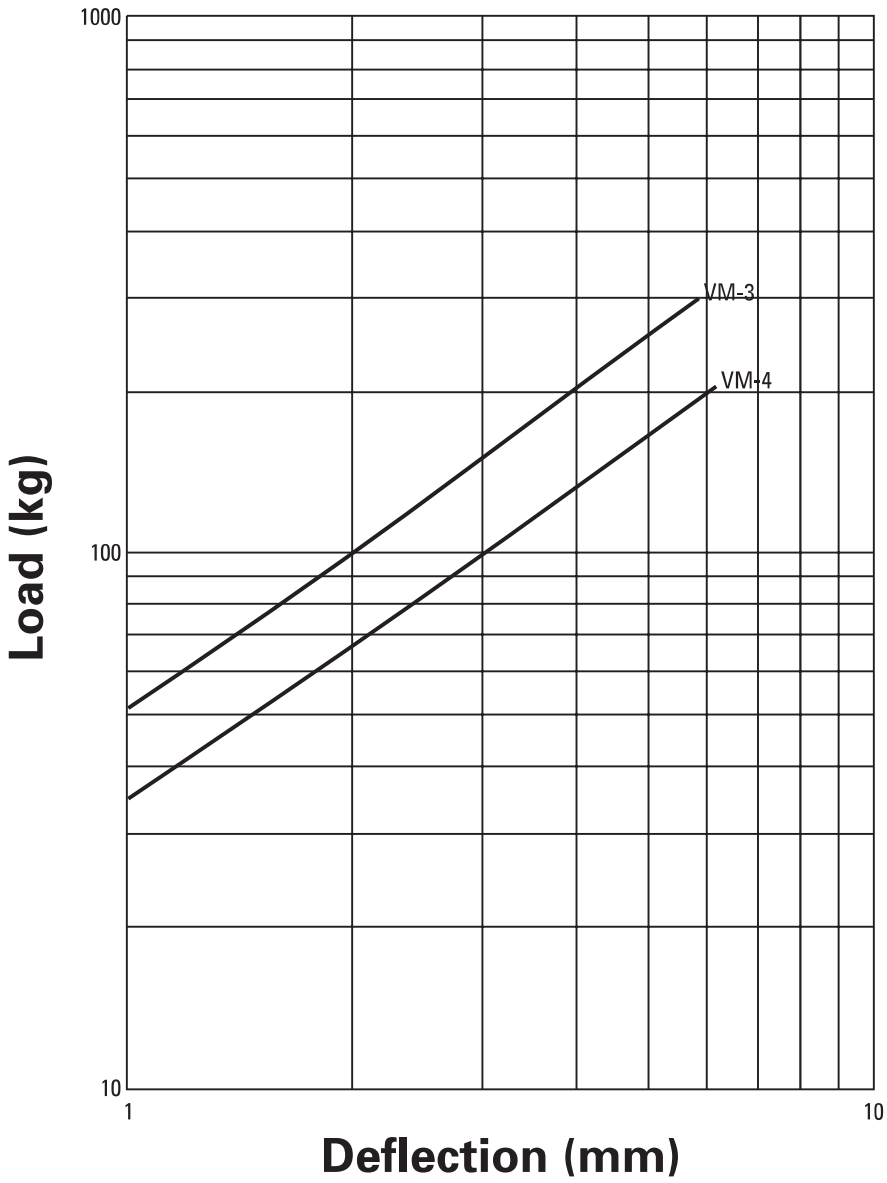

Diesel	
Engine Model	**Vib-Mt**
D25-6 D25-6S D30-8 D30-6S	VM-4
D40-4 D40-4S D50-4 D50-4S D60-4 D60-6S D80-6 D80-2S D100-6 D100-6S D125-6 D150-8 D175-2	VM-3

Information contained in this publication may be considered confidential.
Discretion is recommended when distributing.
Materials and specifications are subject to change without notice.
CAT, CATERPILLAR, their respective logos, “Caterpillar Yellow” and the POWER EDGE trade dress, as well as corporate and product identity used herein, are trademarks of Caterpillar and may not be used without permission.

Market: N. America

LEHE4004-02 (06-07)

www.cat-electricpower.com

© 2007 Caterpillar
All Rights Reserved.
Printed in U.S.A.



Cat® PL444 4G LTE Radio (Model: PL444 NA) Telematics Hardware

Product Description

The Caterpillar PL444 system is a Telematics product that is designed to record and store data from multiple datalinks (CAN J1939, Modbus RS485) present on higher level systems, then transmit the data offboard via wireless communications (cellular) to back office systems for end customer use.

Features

Design Specifications:

- 4G LTE Category 4 Radio
- GNSS signal tracking
- CAN datalink communication
- Modbus datalink communication
- Durable IP66/67-rated enclosure

Radio Connections / Pinout

	A	B	C	D	E	F	G	K	L	M
1	CAN_H	CAN_L	Not used	Not used	Not used	Not used	Not used	Not used	KSW	Batt+
2	Not used	Not used	Not used	Not used	Not used	Not used	Not used	Wireless Disable	Not used	Batt-
3	RS485 RTN	Not used	Not used	Not used	Not used	Not used	LSD1	Not used	Not used	Not used
4	RS485_A	RS485_B	Not used	Not used	Not used	Not used	Not used	Not used	Not used	Not used

CAN_H: CAN High
CAN_L: CAN Low
KSW: Keyswitch (Ignition) – Wakes the device up when tied to Batt+ voltage
Batt+: 12/24V Input
Batt-: Ground/Return
Wireless Disable: When pulled to ground, disables all RF transmissions (Cellular)
LSD1/2: Low Side Drivers 1 and 2. Connects a load with a voltage source, to ground when enabled, completing the circuit
RS485 RTN: RS-485 Shield
RS485A/B: RS-485 Modbus connections

Radio Dimensions

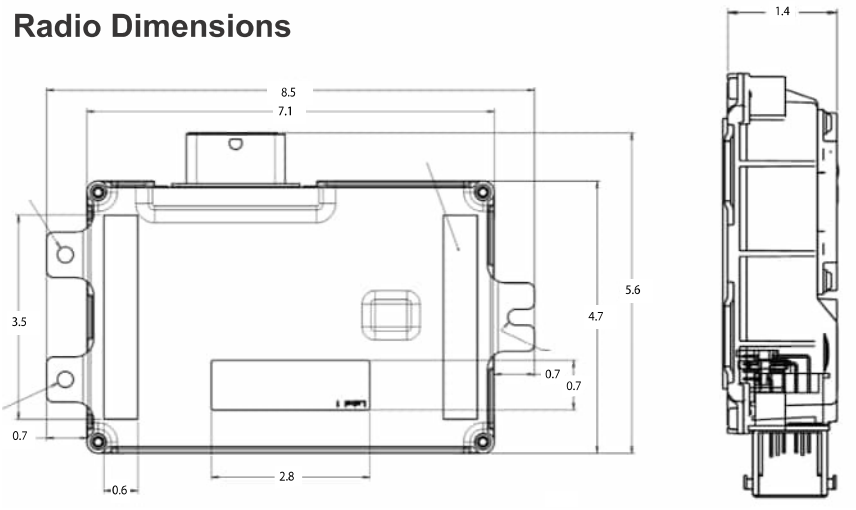

*All dimensions are in inches.

Technical Specifications

Input Voltage
Voltage Range ..... 9 to 32V DC
Protection ..... Reverse polarity

Current Consumption
Idle Current (non-transmitting) ..... < 300 mA
Peak Current ..... < 6A
Sleep Current ..... <3 mA

Physical Specifications
Enclosure Material ..... Plastic (PBT+ASA GF30 FR)
Aluminum (AlMg2.5 / H22; H23)
Dimensions (in) ..... 8.5 x 5.6 x 1.4
Weight ..... 0.45 kg
Interface Connectors ..... 48 pin Molex

Environment
Operating/Storage Temp ..... -40°C to +85°C
Ingress Protection IP66/67
Humidity ..... SAE J1455
Vibration ..... 9.8 Grms random (24-2000 Hz), up to 0.5 g^2/Hz

Regulatory Compliance
FCC, IC, CE RED, EN/UL/CSA 62368-1, RoHS, WEEE, REACH

LEDs
Orange — GNSS (Solid: GNSS Fix, 1Hz: Searching/no lock, Off: Fault)
Blue — Datalink (Flashing: Activity on J1939 or Modbus Off: Fault or No Connection)
Yellow — Cellular (Solid: Data connection established, Flashing: Searching for signal, Off: Modem off or Fault)
White — Bluetooth® (Solid: Connection established, Flashing: Advertising mode, Off: Bluetooth off or Fault)

Secure Key Injection
Security ..... Unique and cryptographic identity

Communications
Datalink J1939/CAN
Datalink ..... Modbus (RS-485)
Wireless ..... 4G LTE with 2G/3G fallback
Wireless ..... Bluetooth®/BLE 5.0

I/O
Low Side Drivers (300 mA max) 2
Switch to Ground 1
Keyswitch 1

Positioning (GNSS)
Signal Tracking ..... GPS/Galileo/GLONASS/BeiDou
Antenna ..... Internal

Cellular Communications

LTE Bands/Frequencies

Band	Frequencies (Uplink / Downlink) (MHz)
2	1850-1910 / 1930-1990
4	1710-1755 / 2110-2155
5	824-849 / 869-894
7	2500-2570 / 2620-2690
12/17	699-716 / 729-746
13	777-787 / 746-756

3G (UMTS) Bands/Frequencies

Band	Frequencies (Uplink / Downlink) (MHz)
2	1850-1910 / 1930-1990
4	1710-1755 / 2110-2155
5	824-849 / 869-894

2G (GSM) Bands/Frequencies

Band	Frequencies (Uplink / Downlink) (MHz)
2	1850-1910 / 1930-1990
5	824-849 / 869-894

Antennas ..... 2x internal (Primary + Diversity) to support 2x2 MIMO
SIM ..... eUICC chip
Operating Temperature ..... -30°C to +70°C

Bluetooth® Communications
Frequencies ..... 2402 – 2480 MHz
Version ..... BLE 5.0
Antenna ..... internal

LET'S DO THE WORK.™

www.cat.com/electricpower
©2021 Caterpillar
All rights reserved.
Materials and specifications are subject to change without notice.
The International System of Units (SI) is used in this publication.
CAT, CATERPILLAR, LET'S DO THE WORK, their respective logos, "Caterpillar Corporate Yellow" the "Power Edge" and Cat "Modern Hex" trade dress as well as corporate and product identity used herein, are trademarks of Caterpillar and may not be used without permission.

Battery Charger

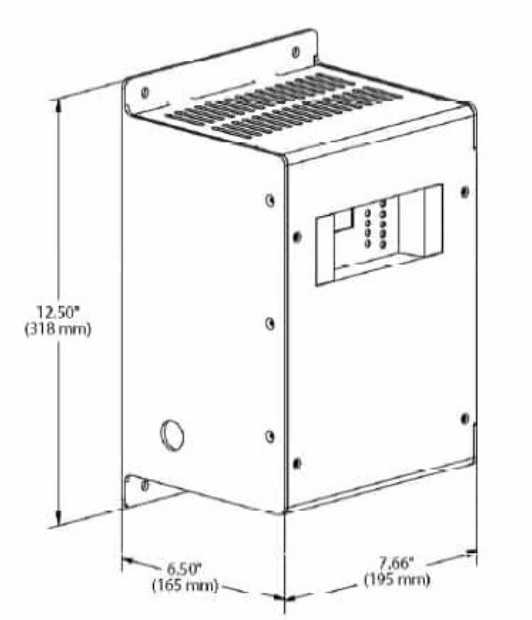

Image Shown may not Reflect Actual Package.

UL 10 Amp

Battery Charger

This battery charger offers accurate, automatic charging of lead-acid and nickel cadmium batteries. The output voltage automatically adjusts to changing input, load, battery and ambient conditions. This prevents battery over-charging and consequent loss of battery electrolyte.

Standard features include AC line compensation, precision voltage regulation, current limiting, automatic 2-rate charging, voltmeter and ammeter, temperature compensation and UL Listing.

The user interface is easy to understand with digital metering, NFPA 110 alarms and a battery fault alarm.

Features

- Electronically current limited at 105% of rated output
- Alarm system
- Digital display
- Lightning and voltage transient protection
- Protection of connected equipment against load dump protection
- Constant voltage, current limited, 4-rate automatic equalization
- IP 20 housing
- Temperature compensation
- On board temperature sensor with remote port
- Auto AC line compensation
- Output regulated by sensed battery voltage

Standards

- C-UL listed to UL 1236
- NFPA 70, NFPA 110
- CSA 22.2 No 107 certified
- CE DOC to EN 60335
- IBC Seismic Certification

Battery Charger

Specifications

Input supply	110 – 120 V 208 – 240 V
AC and DC fuses	2 input and 2 output)
Output voltage	24V
Output amps	10
Frequency	50 / 60 Hz
Operating temperature	-20°C (-4°F) to +60°C (140°F)
Housing constructed of rustproof anodized Aluminum	

Dimensions			
Width	Depth	Height	Weight
195 mm (7.66 in)	165 mm (6.5 in)	318 mm (12.5 in)	10.4 kg (23 lb)

NFPA 110 alarm package as follows:

- AC on Green led (indication)
- AC fail Red led and form C contact (2A)
- Float mode LED
- Fast charge LED
- Temp comp active LED
- Low battery volts Red led and Form C conta
- High Battery Volts Red led and Form C conta
- Charger fail Red led and Form C conta
- Battery fault Red led and Form C conta
- Battery disconnected
- Battery polarity reversed
- Mismatched charger battery voltage
- Open or high resistance charger to battery connection
- Open battery cell or excessive internal resistance

Feature Codes:

BTC1024 BTC1028 BTC1035 BTC1025 BTC1032

Information contained in this publication may be considered confidential. Discretion is recommended when distributing.
Materials and specifications are subject to change without notice.

CAT, CATERPILLAR, LET'S DO THE WORK, their respective logos, "Caterpillar Yellow," the "Power Edge" and Cat "Modern Hex" trade dress as well as corporate and product identity used herein, are trademarks of Caterpillar and may not be used without permission.

©2019 Caterpillar
All rights reserved.

Cat® Batteries



Cat Batteries – Greater Starting Power – Lower Maintenance – Longer Life

Cat Premium High Output (PHO) batteries are used in all Caterpillar Machines and Engine Gen-Sets. They are designed to meet stringent Caterpillar design specifications, which provide industry leading cold cranking amp (CCA) capability and maximum vibration resistance.

Maintenance Free or low maintenance designs are available in wet and dry configurations.

General Service Line batteries are available in Maintenance Free or low maintenance designs and in wet or dry configurations. Wide selections of BCI group sizes are available for automotive, light truck, bus, industrial, agricultural, marine, recreational and valve regulated (VRLA-AGM & Gel) applications.

Caterpillar. The difference counts.™

Cat Dealers define world – class product support. We offer you the right parts and service solutions, when and where you need them.

The Cat Dealer network of highly trained experts keeps your entire fleet up and running to maximize your equipment investments.

CATERPILLAR®

World's Toughest Batteries



Premium High Output – Maximum Vibration Resistance

- Vibration Resistance...five times the Industry Standard
- Exclusive "flat top" BCI group 4D & 8D batteries are Maintenance Free and have the industries highest cold cranking amps (CCA)
- Popular BCI group 31 Maintenance Free batteries with industry leading cold cranking amps...up to 1000 (CCA), for electric power, machine or on-highway truck and bus applications. Deep cycle models available for truck, marine or recreational usage

Specifications for Cat Premium High Output Batteries – Available Worldwide

									BCI Overall Dimensions			Nominal Weight	
BCI Group Size	Part No.	Cold Cranking Amps"	Reserve Capacity Minutes'	Volts	Amp Hr. Capacity @ 20 Hrs.	Construction	Add Water Maintenance Check Hours	Length In (mm)	Width In (mm)	Height In (mm)	Wet Lb (kg)	Dry Lb (kg)	Nominal Acid to Fill Qt (liter)
8D	153-5720	1500	465	12	210	C	MF	20.47 (520)	10.8 (275)	9.76 (248)	132 (60)	–	–
8D	101-4000	1400	400	12	190	LAC+	1000	20.7 (526.5)	10.96 (278)	9.76 (248)	132 (60)	86 (39)	18.0 (17.0)
4D	153-5710	1400	425	12	200	C	MF	20.47 (520)	8.58 (218)	9.76 (248)	119 (54)	–	–
4D	153-5700	1125	305	12	145	C	MF	20.47 (520)	8.58 (218)	9.76 (248)	101 (46)	–	–
4D	9X-9730	1300	400	12	190	LAC+	1000	20.75 (527)	8.58 (218)	9.76 (248)	119 (54)	81 (37)	14.8 (14.0)
4D	9X-9720	1000	275	12	140	LAC+	1000	20.75 (527)	8.58 (218)	9.76 (248)	101 (46)	59 (27)	15.9 (15.0)
31	175-4390	1000	180	12	90	C/S	MFA	12.9 (328.4)	6.74 (171.2)	9.29 (236)	60 (27)	–	–
31	175-4370	825	190	12	100	C/S**	MFA	12.9 (328.4)	6.74 (171.2)	9.29 (236)	60 (27)	–	–
31	175-4360	710	185	12	100	C/S***	MFA	12.9 (328.4)	6.74 (171.2)	9.29 (236)	60 (27)	–	–
31	**250-0480**	710	185	12	100	C/SDT***	MF	12.9 (328.4)	6.74 (171.2)	9.29 (236)	60 (27)	–	–
(2) 31	115-2422	1000	170	12	90	C SAE	MFA	12.9 (328.4)	6.74 (171.2)	9.46 (240.3)	60 (27)	–	–
31	115-2421	950	170	12	90	C SAE +	MFA	12.9 (328.4)	6.74 (171.2)	9.46 (240.3)	60 (27)	44 (20)	6.6 (6.2)
31	9X-3404	950	165	12	100	C SAE	MF	13 (330.2)	6.77 (172)	9.46 (240.3)	58 (26)	–	–
31	3T-5760	750	165	12	100	C SAE	MF	13 (330.2)	6.77 (172)	9.46 (240.3)	55 (25)	–	–
24	153-5656	650	110	12	52	SC	MF	10.98 (278.9)	6.85 (174)	9.0 (229.1)	39 (18)	–	–
65	230-6368	880	140	12	80	SC	MF	11.9 (303.4)	7.5 (190.8)	7.5 (191.4)	45.5 (21)	–	–
74	153-5660	650	110	12	52	SC*	MF	10.98 (278.9)	7.0 (178.2)	8.15 (206.9)	39 (18)	–	–
58	175-4280	500	70	12	35	SC	MF	9.96 (253.1)	7.2 (182.5)	6.9 (176)	31 (14)	–	–
2	153-5690	765	210	6	90	LAC+	1000	10.24 (260)	6.8 (173)	8.72 (221.6)	37 (17)	22 (10)	4.8 (4.5)

Construction Notes:
LAC = Low Maintenance, Hybrid Construction
C = Calcium Lead Alloy Grid Design
MF = Maintenance Free
MFA = Maintenance Free with Accessible Vent Caps
S = Stud Terminals
+ = Shipped Dry Only
* = Side Terminals
** = Starting and Deep Cycle Battery
*** = Deep Cycle and Starting Battery
" = For 30 seconds at 0° F (-18° C)
' = Minimum of 25 amp output at 80° F (27° C)
SAE = Uses SAE Posts
SDT = Dual, Top mounted Terminals, Stud and SAE Post, Marine Deep Cycle/Starting Battery
SC = Silver (Ag) Calcium Alloy Grids for resistance to high underhood temperatures

Rugged Design – Built Tough – Reliable Starting

- Positive and Negative plates are anchored to container bottom and locked at the top of cell element for maximum vibration resistance.
- Heavy-duty forged terminal post bushings provide maximum strength and resistance to acid seepage.
- Hefty full-frame grids, no sharp edges, optimum acid/paste combination provides better charge acceptance after deep discharge.
- Manifold vented cover with built-in Flame Arrestor…a safety feature that directs corrosive gases away from the battery and hold-downs.
- Thick, robust container resists rugged treatment typical of heavy-duty commercial use. Embossed part number & descriptors for easy serviceability.

Cat Batteries

Heavy-duty Forged Terminal Post Bushings

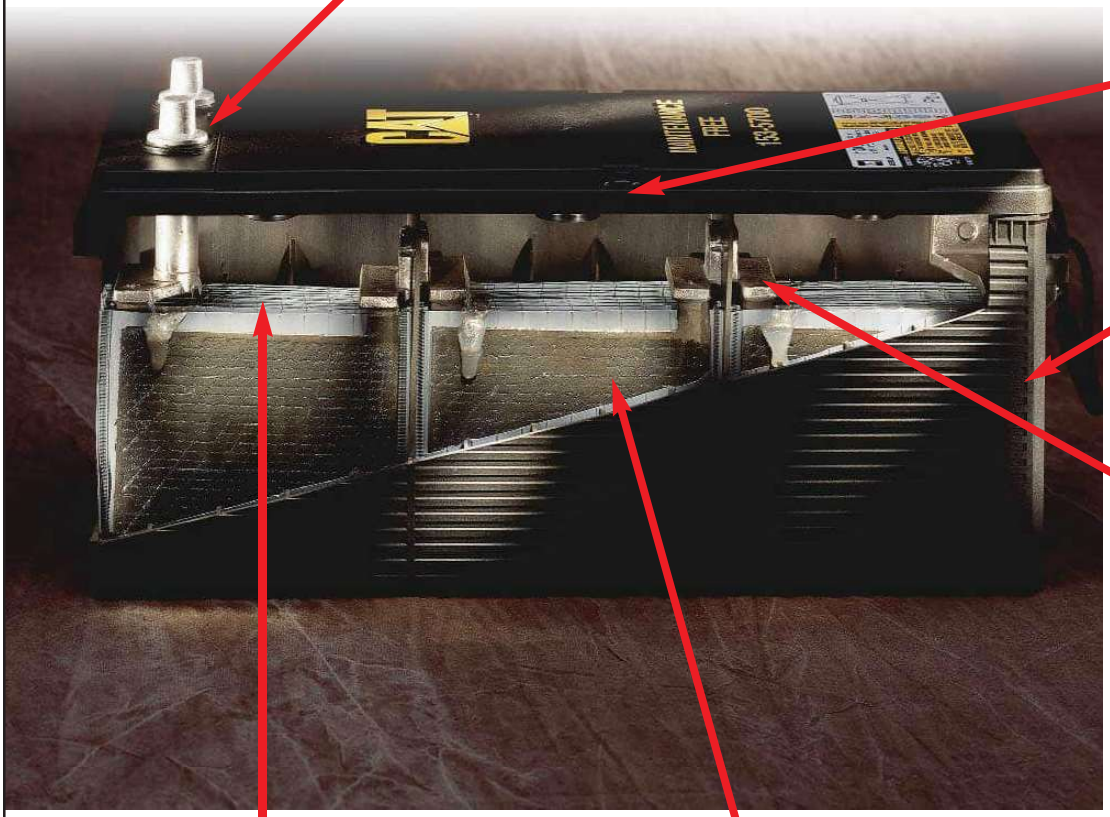

Built-in Flame Arrestor

Robust Reinforced Case

Vibration Resistant Plates & Elements

Heavy-duty Grids

Rugged Separators

Robust Components = Long Life + Reliable Starts

- Heavy-duty forged terminal post bushings provide maximum strength and resistance to acid seepage that causes corrosion and black posts. Thicker internal terminal posts provide lower electrical resistance and higher cold cranking amp output.
- Rugged microporous polyethylene envelope separators protect against “shorts” and vibration damage. Deep Cycle batteries utilize double insulated Glass mat separators for longer cycling life.
- Maintenance Free batteries utilize calcium lead alloy on both positive and negative plates that reduces gassing and water consumption. Automotive batteries have Silver (Ag) Calcium Alloy Grids for resistance to high underhood temperatures.
- Heavy-duty, full frame battery grids with no sharp edges. An optimum acid/paste combination provides better charge acceptance after a deep discharge.
- Positive and Negative plates are anchored to the container bottom and the cell element is locked at the top for maximum vibration resistance. Straps are thicker, heavier and cast (not welded) into the plates.
- Manifold vented cover with built-in Flame Arrestor…a safety feature that directs corrosive gases away from the battery and hold-downs.
- Robust reinforced case provides extra strength in all temperature extremes. Brickwork design on sides reduces chance of punctures and case flexing. Embossed part number and descriptors for easy serviceability.

CAT, CATERPILLAR, their respective logos and “Caterpillar Yellow,” as well as corporate and product identity used herein, are trademarks of Caterpillar and may not be used without permission.

For more information, see us today or visit our web site at www.cat.com

Caterpillar. The difference counts.™

CATERPILLAR®

PEHJ0073-01 Printed in the U.S.A.
© 2005 Caterpillar All Rights Reserved

Cat® DEO™

Diesel Engine Oil for North America (Canada, Mexico, United States).

SAE 15W-40, SAE 10W-30



Recommended Use

- Cat earthmoving, commercial, marine* and on-highway truck diesel engines
- Low-emission diesel engines including Cat engines with ACERT® Technology
- Heavy-duty diesel engines made by other manufacturers that recommend API CI-4 PLUS, CH-4 or CG-4 category oil (See "Typical Characteristics" on page 2 for more information)
- Automotive gasoline engines that require API SL category oils

* Excluding 3600, C280, 3126 and 3116 MUI Marine and MaK diesel engines. The 3116 and 3126 MUI Marine diesel engines with closed crankcase ventilation systems should use Cat SAEO™.

Discover the Difference

Cat DEO is developed, tested and approved by Caterpillar to meet the same high standards as all Genuine Cat Parts.

Factory-Fill—Used as standard factory-fill for Cat machines.

Increased Engine Life—Resists oxidation and prevents build-up of deposits on pistons and rings.

Longer Intervals—Extends oil drain intervals while providing excellent engine protection and performance when used in conjunction with our S•O•S℠ Services oil analysis program.

Proven Performance—Tested thoroughly in Cat diesel engines including Cat engines with ACERT Technology to ensure excellent engine life and performance.

Long-Lasting Protection—Improved soot control and enhanced shear stability enable oil to maintain proper viscosity for longer operating periods in Cat engines with ACERT Technology, especially those equipped with HEUI systems.

Caterpillar. The difference counts.™

Cat Dealers define world-class product support. We offer you the right parts and service solutions, when and where you need them.

The Cat Dealer network of highly trained experts keeps your entire fleet up and running to maximize your equipment investment.

CATERPILLAR®

Cat DEO

Cat DEO Performance

Performance Requirements	Test	Commercial ECF-1	Cat DEO
Cat 3406E Endurance Test	Cat Proprietary		
Cat C13 ACERT Endurance Test	Cat Proprietary		
Cat 3500 Series Test	Cat Proprietary		
Cat C13 ACERT Wheel Loader Test	Cat Proprietary		
Improved Soot-Viscosity & Shear Control			
High Temperature Shear			
Elastomer Compatibility			
Piston ring & Cylinder liner wear			
Valve train wear, sludge, oil filter plugging			
Aeration Control			
Bearing Corrosion			
Cam roller follower pin wear			
Copper, lead and tin erosion			
Foaming Control			
Viscosity Shear loss			
Viscosity Increase from soot			
Oxidation			
Piston deposits and oil control			

Tested Beyond Industry Standards

In addition to the tests required for the ECF-1 classification, Cat DEO undergoes four proprietary multi-cylinder endurance tests, a variety of quality assurance tests and thousands of hours of field service. Only when it has passed all these tests can it be approved by Caterpillar. The chart to the left indicates the differences between ECF-1 standards and the proprietary standards of Caterpillar.

Typical Characteristics*

SAE Viscosity Grade	15W-40	10W-30
API Service Classification		
Diesel	CI-4 PLUS, CI-4, CH-4, CG-4,CF-4/CF	CI-4, CH-4, CG-4, CF-4/CF
Gasoline	SL	SL
OEM Performance Level:		
Caterpillar	ECF-1	ECF-1
Volvo	VDS-3	VDS-2
DDC	93K214	
Cummins	CES 20071/76/78	CES 20071/76
Mack	EO-NPP '03, EO-M Plus	EO-M Plus
Flash Point, °C (ASTM D92)	224	227
Pour Point, °C (ASTM D97)	-30	-33
Viscosity		
cSt @ 40°C (ASTM D445)	120.5	76
cSt @ 100°C (ASTM D445)	15.5	11.5
Viscosity Index (ASTM D2270)	135	145
Sulfated Ash, % wt. (ASTM D874)	1.3	1.3
TBN (ASTM D2896)	11.3	11.3
Zinc, % wt. (ASTM D4951)	0.146	0.146
Gravity @ 16°C		
API (ASTM D287)	29.3	31.8
Specific	0.880	0.867

*The values shown are typical values and should not be used as quality control parameters to either accept or reject product. Specifications are subject to change without notice.

Other Recommended Oils

Cat DEO SYN™ 5W-40

For engines that must be started in extremely low temperatures down to -30°C(-22°F) consider using Cat DEO SYN 5W-40. This is a full synthetic diesel engine oil.

S•O•S Services for early problem detection

Protect your investment with Cat S•O•S oil analysis, the ultimate detection and diagnostic tool for your equipment. S•O•S helps you detect potential problems before they can lead to major failures and costly, unscheduled downtime.

Cat Filters: Complete protection for your machine

Combine Cat Fluids with Cat Filters for the highest level of contamination control and protection for your machine. We recommend Cat Filters for all Cat machine applications.

Health and Safety

Under normal conditions of intended use, this product does not pose a risk to health. Excessive exposure may result in eye, skin or respiratory irritation. Always observe good hygiene measures. Read and understand the Material Safety Data Sheet (MSDS) before using this product. For a copy of the MSDS, visit us on the web at www.catmsds.com.

PEHJ0059-02 www.cat.com © 2006 Caterpillar All Rights Reserved Printed in USA

CATERPILLAR®

Cat® ELC

Extended Life Coolant for Caterpillar and original equipment manufacturer (OEM) diesel and gasoline engines

50/50 Premix



Recommended Use

Cat ELC meets or exceeds the requirements of the following specifications and guidelines:

- Cat EC-1
- TMC RP-329
- TMC RP-338
- ASTM D-3306
- ASTM D-6210
- SAE J1034

Cat ELC also meets the performance requirements of Cummins, Detroit Diesel, International, Mack and Volvo.

Discover the Difference

Cat ELC is developed, tested and approved by Caterpillar to meet the same high standards as all Genuine Cat Parts.

- Factory-Fill—Used as standard factory-fill for all Cat machine cooling systems.
- Lower Maintenance Costs—Reduces engine coolant and additive costs by as much as 500% compared to conventional coolants. It eliminates the need for supplemental coolant additives, extends coolant change-out intervals and reduces disposal requirements.
- Advanced Metal Protection—Incorporates an advanced formula technology with organic acid additive corrosion inhibitors, such as a combination of mono and dicarboxylates for maximum protection of copper, solder, brass, steel, cast iron and aluminum.

CATERPILLAR®

Cat ELC for Maximum Coolant Life

Cat DEAC™

3000 Hour Life or
333,000 km (200,000 miles)
Cat Supplemental Coolant Additives Every 250 Hours
or 25,000 km (15,000 miles)

Cat ELC (Machines and Commercial Engines)

Cat Extender Every 6000 Hours*

12,000 Hour Life or 6 Years**
(whichever comes first)

Cat ELC (Truck Engines)

Cat Extender Every 500,000 km (300,000 miles)* **1,000,000 km (600,000 miles) or 6 Years****
(whichever comes first)

* Or one-half of the coolant service life.

** These coolant change intervals are only possible with annual S•O•S Level 2 coolant sampling and analysis.

Typical Characteristics*

Color	Strawberry Red
Boiling protection with 15 psi (1 bar) radiator cap	
50% Cat ELC/50% water	129°C (265°F)
60% Cat ELC/40% water (ELC concentrate added)	132°C (270°F)
Freezing protection	
50% Cat ELC/50% water	-37°C (-34°F)
60% Cat ELC/40% water (ELC concentrate added)	-52°C (-62°F)
Nitrite (50% solution)	500 ppm
Molybdate (50% solution)	530 ppm

*The values shown are typical values and should not be used as quality control parameters to either accept or reject product. Specifications are subject to change without notice.

S•O•S℠ services for early problem detection

Protect your investment with Cat S•O•S Coolant Analysis, the ultimate detection and diagnostic tool for your equipment. We recommend S•O•S Level 1 Coolant Analysis according to the engine's Operation and Maintenance Manual, and Level 2 Coolant Analysis annually for all your Cat equipment.

Cat ELC Extender for Longer Life

- Exceeds Cat EC-1 performance requirements
- Protects against cylinder liner/block pitting and cavitation erosion
- Should be added at 500,000 km (300,000 miles) for Cat powered on-highway trucks and 6,000 hours for commercial engines
- Extender is only necessary once during the life of the coolant
- Ensures Cat ELC performance to 1,000,000 km (600,000 miles) or 12,000 hours

Cat ELC Extender and Flush Intervals

Cat ELC Extender should be added after 6,000 hours or 300,000 miles (500,000 km) of operation, and the system should be drained and flushed with clean water after 12,000 hours or 600,000 miles (1,000,000 km). No cleaning agents are needed. If S•O•S℠ Services are used regularly, safe operation with Cat ELC may extend beyond 12,000 hours.

Health and Safety

Under normal conditions of intended use, this product does not pose a risk to health. Excessive exposure may result in eye, skin or respiratory irritation. Always observe good hygiene measures. Read and understand the Material Safety Data Sheet (MSDS) before using this product. For a copy of the MSDS, visit us on the web at www.catmsds.com.

CAT® DEALERS DEFINE WORLD-CLASS PRODUCT SUPPORT.

We offer you the right parts and service solutions, when and where you need them.

The Cat Dealer network of highly trained experts can help you maximize your equipment investment.



PEHJ0067-02
www.cat.com

© 2007 Caterpillar • All Rights Reserved • Printed in USA
CAT, CATERPILLAR, their respective logos, "Caterpillar Yellow" and the POWER EDGE trade dress, as well as corporate and product identity used herein, are trademarks of Caterpillar and may not be used without permission.

CATERPILLAR®
TODAY'S WORK. TOMORROW'S WORLD.™

GENERATOR DATA

NOVEMBER 25, 2024

For Help Desk Phone Numbers Click here

Selected Model

Engine: C18	**Generator Frame:** LC7234J	**Genset Rating (kW):** 650.0	**Line Voltage:** 480
Fuel: Diesel	**Generator Arrangement:** 5475949	**Genset Rating (kVA):** 812.5	**Phase Voltage:** 277
Frequency: 60	**Excitation Type:** Permanent Magnet	**Pwr. Factor:** 0.8	**Rated Current:** 977.3
Duty: STANDBY	**Connection:** SERIES STAR	**Application:** EPG	**Status:** Current

Version: 42423 /42947 /43269 /8157

Spec Information

Generator Specification

Frame: LC7234J **Type:** LC **No. of Bearings:** 1
Winding Type: RANDOM WOUND **Flywheel:** 14.0
Connection: SERIES STAR **Housing:** 1
Phases: 3 **No. of Leads:** 12
Poles: 4 **Wires per Lead:** 0
Sync Speed: 1800 **Generator Pitch:** 0.6667

Generator Efficiency

Per Unit Load	kW	Efficiency %
0.25	162.5	91.7
0.5	325.0	94.4
0.75	487.5	95.0
1.0	650.0	94.9

Reactances	Per Unit	Ohms
SUBTRANSIENT - DIRECT AXIS X''_d	0.1054	0.0299
SUBTRANSIENT - QUADRATURE AXIS X''_q	0.1192	0.0338
TRANSIENT - SATURATED X'_d	0.1319	0.0374
SYNCHRONOUS - DIRECT AXIS X_d	2.6717	0.7576
SYNCHRONOUS - QUADRATURE AXIS X_q	1.6028	0.4545
NEGATIVE SEQUENCE X_2	0.1121	0.0318
ZERO SEQUENCE X_0	0.0063	0.0018

Time Constants	Seconds
OPEN CIRCUIT TRANSIENT - DIRECT AXIS T'_{d0}	2.0280
SHORT CIRCUIT TRANSIENT - DIRECT AXIS T'_d	0.1000
OPEN CIRCUIT SUBSTRANSIENT - DIRECT AXIS T''_{d0}	0.0125
SHORT CIRCUIT SUBSTRANSIENT - DIRECT AXIS T''_d	0.0100
OPEN CIRCUIT SUBSTRANSIENT - QUADRATURE AXIS T''_{q0}	0.1345
SHORT CIRCUIT SUBSTRANSIENT - QUADRATURE AXIS T''_q	0.0100
EXCITER TIME CONSTANT T_e	0.0258
ARMATURE SHORT CIRCUIT T_a	0.0150

Short Circuit Ratio: 0.45 | Stator Resistance = 0.0061 Ohms | Field Resistance = 0.3686 Ohms

Voltage Regulation

Voltage level adjustment: +/-	5.0%
Voltage regulation, steady state: +/-	0.5%
Voltage regulation with 3% speed change: +/-	0.5%
Waveform deviation line - line, no load: less than	2.0%
Telephone influence factor: less than	50

Generator Excitation

	No Load	Full Load, (rated) pf	
		Series	Parallel
Excitation voltage:	17.68 Volts	69.41 Volts	Volts
Excitation current	1.12 Amps	3.62 Amps	Amps

Selected Model

Engine: C18	**Generator Frame:** LC7234J	**Genset Rating (kW):** 650.0	**Line Voltage:** 480
Fuel: Diesel	**Generator Arrangement:** 5475949	**Genset Rating (kVA):** 812.5	**Phase Voltage:** 277
Frequency: 60	**Excitation Type:** Permanent Magnet	**Pwr. Factor:** 0.8	**Rated Current:** 977.3
Duty: STANDBY	**Connection:** SERIES STAR	**Application:** EPG	**Status:** Current

Version: 42423 /42947 /43269 /8157

Generator Mechanical Information

Center of Gravity

Dimension X	0.0 mm	0.0 IN.
Dimension Y	0.0 mm	0.0 IN.
Dimension Z	0.0 mm	0.0 IN.

- "X" is measured from driven end of generator and parallel to rotor. Towards engine fan is positive. See General Information for details
- "Y" is measured vertically from rotor center line. Up is positive.
- "Z" is measured to left and right of rotor center line. To the right is positive.

Generator WT = 1623 kg * Rotor WT = 602 kg * Stator WT = 1021 kg
3,578 LB 1,327 LB 2,251 LB

Rotor Balance = 0.0508 mm deflection PTP
Overspeed Capacity = 125% of synchronous speed

Generator Torsional Data

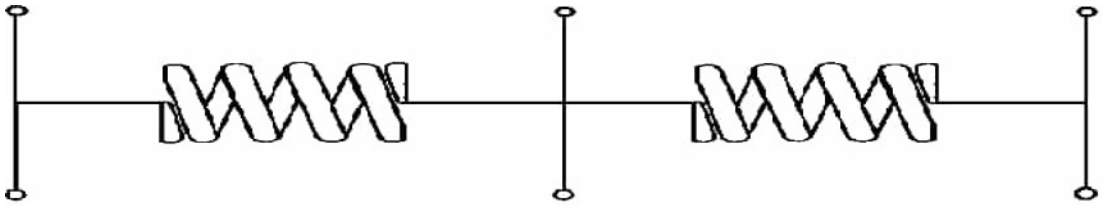

J1 = Coupling and Fan | **J2 = Rotor** | **J3 = Exciter End**

TOTAL J = J1 + J2 + J3

K1 = Shaft Stiffness between J1 + J2 (Diameter 1)			K2 = Shaft Stiffness between J2 + J3 (Diameter 2)			
J1	**K1**	**Min Shaft Dia 1**	**J2**	**K2**	**Min Shaft Dia 2**	**J3**
12.8 LB IN. s^2	93.3 MLB IN./rad	5.5 IN.	66.7 LB IN. s^2	81.0 MLB IN./rad	5.7 IN.	4.5 LB IN. s^2
1.441 N m s^2	10.54092 MN m/rad	140.0 mm	7.54 N m s^2	9.15 MN m/rad	145.0 mm	0.503 N m s^2

Total J

83.9 LB IN. s^2

9.484 N m s^2

Selected Model

Engine: C18	**Generator Frame:** LC7234J	**Genset Rating (kW):** 650.0	**Line Voltage:** 480
Fuel: Diesel	**Generator Arrangement:** 5475949	**Genset Rating (kVA):** 812.5	**Phase Voltage:** 277
Frequency: 60	**Excitation Type:** Permanent Magnet	**Pwr. Factor:** 0.8	**Rated Current:** 977.3
Duty: STANDBY	**Connection:** SERIES STAR	**Application:** EPG	**Status:** Current

Version: 42423 /42947 /43269 /8157

Generator Cooling Requirements - Temperature - Insulation Data

Cooling Requirements:		**Temperature Data: (Ambient 40 ^{0}C)**	
Heat Dissipated:	34.9 kW	**Stator Rise:**	105.0 ^{0}C
Air Flow:	72.0 m^3/min	**Rotor Rise:**	105.0 ^{0}C

Insulation Class: H

Insulation Reg. as shipped: 100.0 MΩ minimum at 40 ^{0}C

Thermal Limits of Generator

Frequency:	60 Hz
Line to Line Voltage:	480 Volts
B BR 80/40	736.0 kVA
F BR -105/40	837.2 kVA
H BR - 125/40	920.0 kVA
F PR - 130/40	920.0 kVA
H PR - 150/40	975.2 kVA
H PR27 - 163/27	1015.0 kVA

Selected Model

Engine: C18	**Generator Frame:** LC7234J	**Genset Rating (kW):** 650.0	**Line Voltage:** 480
Fuel: Diesel	**Generator Arrangement:** 5475949	**Genset Rating (kVA):** 812.5	**Phase Voltage:** 277
Frequency: 60	**Excitation Type:** Permanent Magnet	**Pwr. Factor:** 0.8	**Rated Current:** 977.3
Duty: STANDBY	**Connection:** SERIES STAR	**Application:** EPG	**Status:** Current

Version: 42423 /42947 /43269 /8157

Starting Capability & Current Decrement
Motor Starting Capability (0.6 pf)

SKVA	Percent Volt Dip
150	2.5
308	5.0
475	7.5
651	10.0
837	12.5
1,034	15.0
1,243	17.5
1,465	20.0
1,702	22.5
1,954	25.0
2,223	27.5
2,512	30.0
2,822	32.5
3,156	35.0
3,517	37.5
3,907	40.0

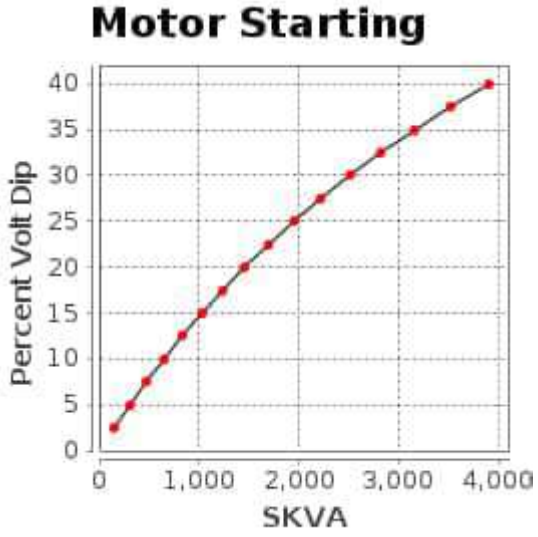

Current Decrement Data

E Time Cycle	AMP
0.0	9,232
1.0	6,698
2.0	5,507
3.0	4,686
4.0	4,027
5.0	3,475
7.5	3,025
10.0	3,362
12.5	3,625
15.0	3,807
20.0	3,698
25.0	3,451
30.0	3,325
35.0	3,285
40.0	3,281
45.0	3,289

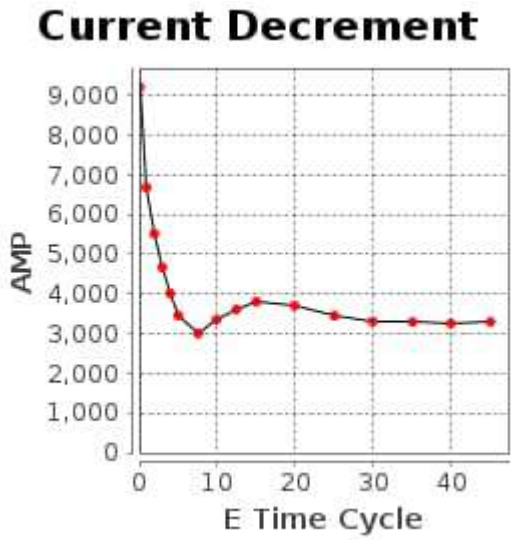

Instantaneous 3 Phase Fault Current: 9232 Amps **Instantaneous Line - Line Fault Current:** 7742 Amps

Instantaneous Line - Neutral Fault Current: 13024 Amps

Selected Model

Engine: C18	**Generator Frame:** LC7234J	**Genset Rating (kW):** 650.0	**Line Voltage:** 480
Fuel: Diesel	**Generator Arrangement:** 5475949	**Genset Rating (kVA):** 812.5	**Phase Voltage:** 277
Frequency: 60	**Excitation Type:** Permanent Magnet	**Pwr. Factor:** 0.8	**Rated Current:** 977.3
Duty: STANDBY	**Connection:** SERIES STAR	**Application:** EPG	**Status:** Current

Version: 42423 /42947 /43269 /8157

Generator Output Characteristic Curves
Open Circuit Curve

Field Current	Line - Line Volt
0.0	0
19.0	288
22.4	336
26.2	384
30.9	432
37.4	480
48.1	528
68.1	576
108.7	624
195.0	672

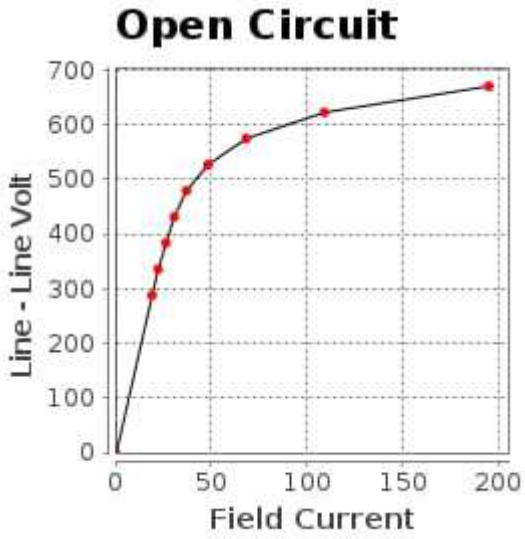

Short Circuit Curve

Field Current	Armature Current
0.0	0
50.0	586
58.3	684
66.6	782
75.0	880
83.3	977
91.6	1,075
99.9	1,173
108.3	1,270
116.6	1,368

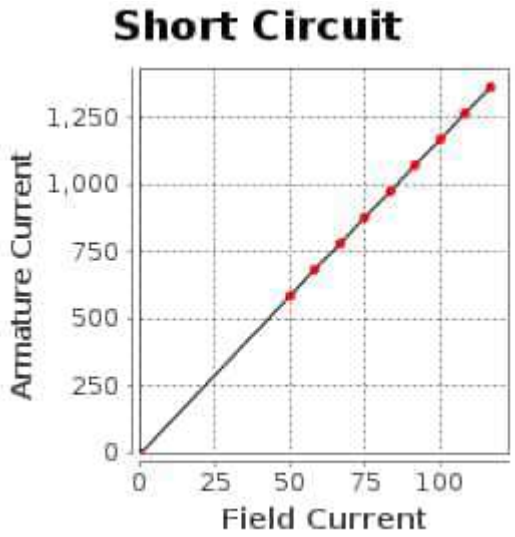

Selected Model

Engine: C18	**Generator Frame:** LC7234J	**Genset Rating (kW):** 650.0	**Line Voltage:** 480
Fuel: Diesel	**Generator Arrangement:** 5475949	**Genset Rating (kVA):** 812.5	**Phase Voltage:** 277
Frequency: 60	**Excitation Type:** Permanent Magnet	**Pwr. Factor:** 0.8	**Rated Current:** 977.3
Duty: STANDBY	**Connection:** SERIES STAR	**Application:** EPG	**Status:** Current

Version: 42423 /42947 /43269 /8157

Generator Output Characteristic Curves
Zero Power Factor Curve

Field Current	Line - Line Volt
83.3	0
100.3	240
103.7	288
107.2	336
111.3	384
116.6	432
124.5	480
138.3	528
165.0	576
220.7	624

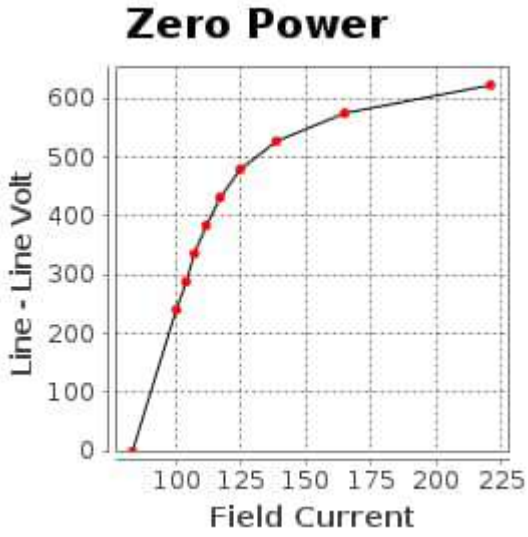

Air Gap Curve

Field Current	Line - Line Volt
0.0	0
18.7	288
21.8	336
25.0	384
28.1	432
31.2	480
34.3	528
37.4	576
40.6	624
43.7	672

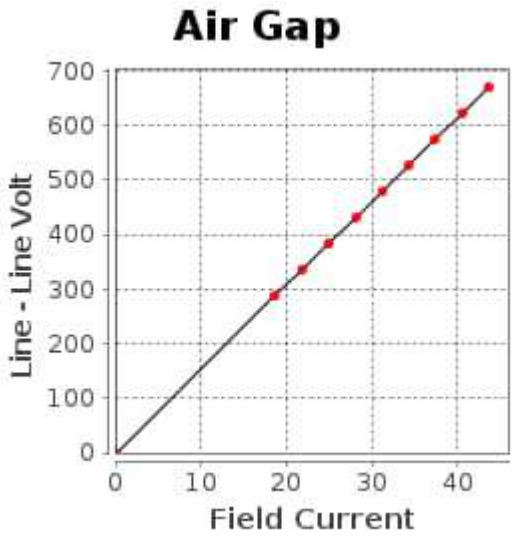

Selected Model

Engine: C18	**Generator Frame:** LC7234J	**Genset Rating (kW):** 650.0	**Line Voltage:** 480
Fuel: Diesel	**Generator Arrangement:** 5475949	**Genset Rating (kVA):** 812.5	**Phase Voltage:** 277
Frequency: 60	**Excitation Type:** Permanent Magnet	**Pwr. Factor:** 0.8	**Rated Current:** 977.3
Duty: STANDBY	**Connection:** SERIES STAR	**Application:** EPG	**Status:** Current

Version: 42423 /42947 /43269 /8157

Reactive Capability Curve

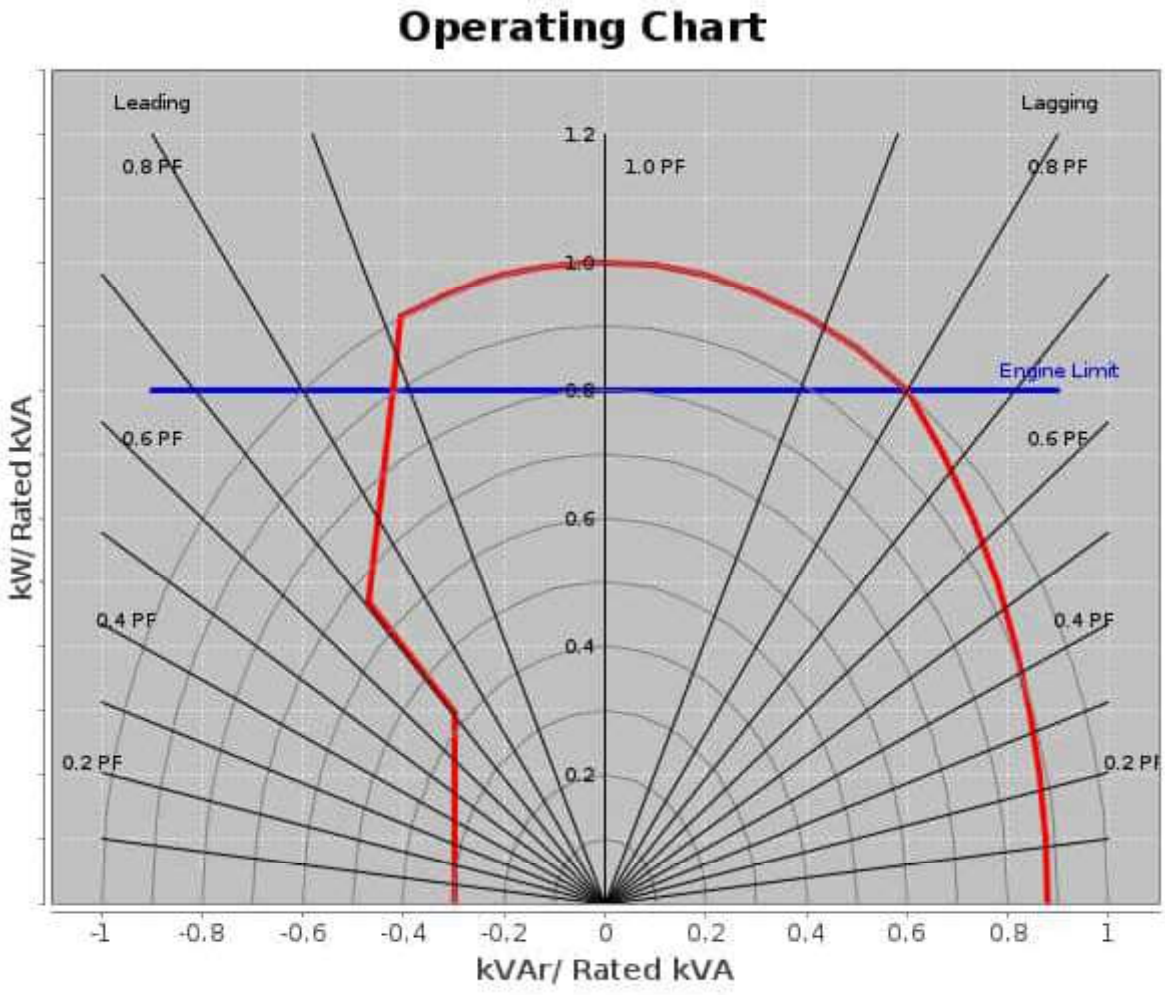

General Information

GENERATOR INFORMATION (DM7900)

---

1. Motor Starting
Motor starting curves are obtained in accordance with IEC60034, and are displayed at 0.6 power factor.

2. Voltage Dip
Prediction of the generator synchronous voltage dip can be made by consulting the plot for the voltage dip value that corresponds to the desired motor starting kVA value.

3. Definitions
A) Generator Keys
Frame: abbreviation of generator frame size
Freq: frequency in hertz.
PP/SB: prime/standby duty respectively
Volts: line - line terminal voltage
kW: rating in electrical kilo watts
Model: engine sales model

B) Generator Temperature Rise
The indicated temperature rises are the IEC/NEMA limits for standby or prime power applications. The quoted rise figures are maximum limits only and are not necessarily indicative of the actual temperature rise of a given machine winding.

C) Centre of Gravity
The specified centre of gravity is for the generator only. For single bearing, and two bearing close coupled generators, the center of gravity is measured from the generator/engine flywheel-housing interface and from the centreline of the rotor Shaft.

For two bearing, standalone generators, the center of gravity is measured from the end of the rotor shaft and from the centerline of the rotor shaft.

D) Generator Current Decrement Curves
The generator current decrement curve indicates the generator armature current arising from a symmetrical three-phase fault at the generator terminals. Generators equipped with AREP or PMG excitation systems will sustain 300% of rated armature current for 10 seconds.

E) Generator Efficiency Curves
The efficiency curve is displayed for the generator only under the given conditions of rating, voltage, frequency and power factor. This is not the overall generating set efficiency curve.

PERFORMANCE DATA[EM3838]

November 25, 2024

Performance Number: EM3838 **Change Level: 03**

SALES MODEL:	C18	**COMBUSTION:**	DIRECT INJECTION
BRAND:	CAT	**ENGINE SPEED (RPM):**	1,800
MACHINE SALES MODEL:		**HERTZ:**	60
ENGINE POWER (BHP):	983	**FAN POWER (HP):**	42.2
GEN POWER WITH FAN (EKW):	650.0	**ADDITIONAL PARASITICS (HP):**	10.1
COMPRESSION RATIO:	14	**ASPIRATION:**	TA
RATING LEVEL:	STANDBY	**AFTERCOOLER TYPE:**	ATAAC
PUMP QUANTITY:	1	**AFTERCOOLER CIRCUIT TYPE:**	JW+OC, ATAAC
FUEL TYPE:	DIESEL	**INLET MANIFOLD AIR TEMP (F):**	120
MANIFOLD TYPE:	DRY	**JACKET WATER TEMP (F):**	192.2
GOVERNOR TYPE:	ELEC	**TURBO CONFIGURATION:**	PARALLEL
CAMSHAFT TYPE:	STANDARD	**TURBO QUANTITY:**	2
IGNITION TYPE:	CI	**TURBOCHARGER MODEL:**	GTD5008 0.75 A/R
INJECTOR TYPE:	EUI	**CERTIFICATION YEAR:**	2018
REF EXH STACK DIAMETER (IN):	6	**PISTON SPD @ RATED ENG SPD (FT/MIN):**	2,161.4
MAX OPERATING ALTITUDE (FT):	3,996		

INDUSTRY	SUBINDUSTRY	APPLICATION
ELECTRIC POWER	STANDARD	PACKAGED GENSET

General Performance Data

GENSET POWER WITH FAN	PERCENT LOAD	ENGINE POWER	BRAKE MEAN EFF PRES (BMEP)	BRAKE SPEC FUEL CONSUMPTN (BSFC)	ISO BRAKE SPEC FUEL CONSUMPTN (BSFC)	VOL FUEL CONSUMPTN (VFC)	ISO VOL FUEL CONSUMPTN (VFC)	ELEC SPEC FUEL CONSUMPTN (ESFC)	ISO ELEC SPEC FUEL CONSUMPTN (ESFC)
EKW	%	BHP	PSI	LB/BHP-HR	LB/BHP-HR	GAL/HR	GAL/HR	LB/EKW-HR	LB/EKW-HR
650.0	100	984	391	0.349	0.346	48.5	48.0	0.529	0.524
585.0	90	885	352	0.347	0.343	43.2	42.8	0.524	0.519
520.0	80	788	314	0.353	0.350	39.3	38.9	0.536	0.531
487.5	75	741	295	0.350	0.347	36.6	36.2	0.533	0.527
455.0	70	694	276	0.345	0.342	33.7	33.4	0.526	0.521
390.0	60	601	239	0.348	0.345	29.5	29.2	0.537	0.532
325.0	50	509	202	0.353	0.350	25.3	25.1	0.553	0.548
260.0	40	419	167	0.359	0.356	21.2	21.0	0.579	0.574
195.0	30	329	131	0.370	0.366	17.1	17.0	0.623	0.618
162.5	25	284	113	0.377	0.374	15.1	14.9	0.659	0.653
130.0	20	238	95	0.389	0.385	13.1	12.9	0.713	0.706
65.0	10	146	58	0.439	0.435	9.0	9.0	0.988	0.978

GENSET POWER WITH FAN	PERCENT LOAD	ENGINE POWER	INLET MFLD PRES	INLET MFLD TEMP	EXH MFLD TEMP	EXH MFLD PRES	ENGINE OUTLET TEMP	COMPRESSOR OUTLET PRES	COMPRESSOR OUTLET TEMP
EKW	%	BHP	IN-HG	DEG F	DEG F	IN-HG	DEG F	IN-HG	DEG F
650.0	100	984	95.1	117.3	1,233.3	85.5	798.6	101	467.6
585.0	90	885	88.1	109.4	1,161.7	77.4	747.6	94	440.8
520.0	80	788	82.8	109.1	1,117.9	72.2	723.3	88	423.5
487.5	75	741	77.1	105.9	1,084.0	66.5	703.0	82	405.1
455.0	70	694	71.6	101.6	1,048.5	60.0	682.5	77	384.0
390.0	60	601	61.3	96.6	1,008.5	51.0	672.1	66	354.2
325.0	50	509	50.9	92.2	976.4	42.2	670.0	55	323.1
260.0	40	419	39.4	88.2	933.6	33.6	656.6	43	281.4
195.0	30	329	28.0	84.8	880.5	25.0	634.1	31	236.7
162.5	25	284	22.7	83.3	849.9	20.8	619.2	25	214.0
130.0	20	238	18.0	82.0	807.2	17.2	595.6	20	192.6
65.0	10	146	9.8	80.1	687.4	11.5	523.3	12	151.2

General Performance Data (Continued)

GENSET POWER WITH FAN	PERCENT LOAD	ENGINE POWER	WET INLET AIR VOL FLOW RATE	ENGINE OUTLET WET EXH GAS VOL FLOW RATE	WET INLET AIR MASS FLOW RATE	WET EXH GAS MASS FLOW RATE	WET EXH VOL FLOW RATE (32 DEG F AND 29.98 IN HG)	DRY EXH VOL FLOW RATE (32 DEG F AND 29.98 IN HG)
EKW	%	BHP	CFM	CFM	LB/HR	LB/HR	FT3/MIN	FT3/MIN
650.0	100	984	2,309.8	5,618.4	10,086.4	10,430.1	2,195.3	2,020.9

585.0	90	885	2,209.4	5,117.7	9,595.2	9,901.9	2,084.3	1,927.2
520.0	80	788	2,129.5	4,822.0	9,208.4	9,486.0	2,004.2	1,859.7
487.5	75	741	2,034.7	4,528.2	8,771.3	9,028.9	1,914.9	1,779.2
455.0	70	694	1,941.2	4,196.1	8,342.6	8,581.8	1,806.2	1,680.0
390.0	60	601	1,761.3	3,741.1	7,525.5	7,733.5	1,625.3	1,513.7
325.0	50	509	1,574.1	3,320.0	6,687.6	6,867.3	1,445.0	1,347.4
260.0	40	419	1,364.6	2,827.3	5,760.8	5,911.2	1,245.3	1,163.6
195.0	30	329	1,151.2	2,323.3	4,829.0	4,950.5	1,044.4	978.7
162.5	25	284	1,046.0	2,072.5	4,374.8	4,481.9	944.4	886.6
130.0	20	238	946.0	1,830.4	3,947.8	4,040.5	852.8	802.3
65.0	10	146	755.3	1,359.8	3,147.2	3,211.4	680.1	643.3

Heat Rejection Data

GENSET POWER WITH FAN	PERCENT LOAD	ENGINE POWER	REJECTION TO JACKET WATER	REJECTION TO ATMOSPHERE	REJECTION TO EXH	EXHAUST RECOVERY TO 350F	FROM OIL COOLER	FROM AFTERCOOLER	WORK ENERGY	LOW HEAT VALUE ENERGY	HIGH HEAT VALUE ENERGY
EKW	%	BHP	BTU/MIN	BTU/MIN	BTU/MIN	BTU/MIN	BTU/MIN	BTU/MIN	BTU/MIN	BTU/MIN	BTU/MIN
650.0	100	984	11,813	6,939	37,627	19,655	5,612	14,151	41,710	105,365	112,240
585.0	90	885	10,521	6,270	33,118	16,441	5,008	12,736	37,524	94,034	100,169
520.0	80	788	9,757	5,599	30,632	14,737	4,551	11,592	33,437	85,442	91,017
487.5	75	741	9,144	5,573	28,123	13,235	4,239	10,511	31,425	79,583	84,776
455.0	70	694	8,489	5,661	25,162	11,826	3,908	9,434	29,424	73,382	78,170
390.0	60	601	7,717	5,284	22,097	10,303	3,417	7,765	25,478	64,155	68,341
325.0	50	509	7,027	4,769	19,099	9,081	2,933	6,184	21,590	55,075	58,669
260.0	40	419	6,418	4,176	16,350	7,476	2,458	4,458	17,762	46,152	49,164
195.0	30	329	5,771	3,581	13,465	5,785	1,985	2,937	13,947	37,269	39,701
162.5	25	284	5,406	3,282	11,948	4,956	1,748	2,291	12,032	32,818	34,960
130.0	20	238	5,010	2,985	10,416	4,064	1,513	1,749	10,104	28,410	30,264
65.0	10	146	4,055	2,394	7,420	2,261	1,048	897	6,197	19,678	20,962

PERFORMANCE DATA[EM3838]

AMBIENT OPERATING TEMP (F)	50	60	70	80	90	100	110	120	130	140	NORMAL
ALTITUDE (FT)											
0	983	983	983	983	983	983	983	983	983	957	983
1,000	983	983	983	983	983	983	983	983	971	935	983
2,000	983	983	983	983	983	983	983	969	935	908	983
3,000	983	983	983	983	983	983	964	933	907	871	983
4,000	983	983	983	983	983	959	929	905	879	792	983
5,000	983	983	983	969	952	925	903	877	835	716	983
6,000	983	983	966	951	937	911	884	846	781	683	983
7,000	983	983	965	951	934	902	862	805	760	671	983
8,000	983	976	958	946	919	877	814	769	731	664	983
9,000	971	953	936	925	895	819	771	730	708	658	977
10,000	944	926	909	899	847	795	751	725	700	659	955
11,000	908	892	878	868	816	774	739	711	682	653	924
12,000	874	860	848	838	792	755	720	687	656	623	893
13,000	837	825	814	804	771	730	689	654	619	594	859
14,000	796	785	776	767	725	682	646	613	591	569	823
15,000	751	740	730	708	669	635	607	586	565	544	782

Cross Reference

Test Spec	Setting	Engine Arrangement	Engineering Model	Engineering Model Version	Start Effective Serial Number	End Effective Serial Number
4581994	PP7265	5365365	GS668	-	LTH00001	
4582012	PP7580	5407425	EE563	-	LT400001	
4582012	PP7580	5407426	EE563	-	LT400001	
4581994	PP7265	5411973	GS668	-	LTH00001	

Performance Parameter Reference

Parameters Reference:DM9600-15
PERFORMANCE DEFINITIONS

PERFORMANCE DEFINITIONS DM9600
APPLICATION:
Engine performance tolerance values below are representative of a typical production engine tested in a calibrated dynamometer test cell at SAE J1995 standard reference conditions. Caterpillar maintains ISO9001:2000 certified quality management systems for engine test Facilities to assure accurate calibration of test equipment. Engine test data is corrected in accordance with SAE J1995. Additional reference material SAE J1228, J1349, ISO 8665, 3046-1:2002E, 3046-3:1989, 1585, 2534, 2288, and 9249 may apply in part or are similar to SAE J1995. Special engine rating request (SERR) test data shall be noted.
PERFORMANCE PARAMETER TOLERANCE FACTORS:
Power +/- 3%
Torque +/- 3%
Exhaust stack temperature +/- 8%
Inlet airflow +/- 5%
Intake manifold pressure-gage +/- 10%
Exhaust flow +/- 6%
Specific fuel consumption +/- 3%
Specific fuel consumption (C7-C18) +/- 4%
Fuel rate +/- 5%
Specific DEF consumption +/- 3%
DEF rate +/- 5%
Heat rejection +/- 5%
Heat rejection exhaust only +/- 10%
Heat rejection CEM only +/- 10%
Heat Rejection values based on using treated water.
Torque is included for truck and industrial applications, do not use for Gen Set or steady state applications.
On C7 - C18 engines, at speeds of 1100 RPM and under these values are provided for reference only, and may not meet the tolerance listed.
On 3500 and C175 engines, at speeds below Peak Torque these values are provided for reference only, and may not meet the tolerance listed.
These values do not apply to C280/3600. For these models, see the tolerances listed below.
C280/3600 HEAT REJECTION TOLERANCE FACTORS:

PERFORMANCE DATA[EM3838]

Heat rejection +/- 10%
Heat rejection to Atmosphere +/- 50%
Heat rejection to Lube Oil +/- 20%
Heat rejection to Aftercooler +/- 5%
TEST CELL TRANSDUCER TOLERANCE FACTORS:
Torque +/- 0.5%
Speed +/- 0.2%
Fuel flow +/- 1.0%
Temperature +/- 2.0 C degrees
Intake manifold pressure +/- 0.1 kPa
OBSERVED ENGINE PERFORMANCE IS CORRECTED TO SAE J1995 REFERENCE
AIR AND FUEL CONDITIONS.
REFERENCE ATMOSPHERIC INLET AIR
FOR 3500 ENGINES AND SMALLER
SAE J1228 AUG2002 for marine engines, and J1995 JAN2014 for other engines, reference atmospheric pressure is 100 KPA (29.61 in hg), and standard temperature is 25deg C (77 deg F) at 30% relative humidity at the stated aftercooler water temp, or inlet manifold temp.
FOR 3600 ENGINES
Engine rating obtained and presented in accordance with ISO 3046/1 and SAE J1995 JANJAN2014 reference atmospheric pressure is 100 KPA (29.61 in hg), and standard temperature is 25deg C (77 deg F) at 30% relative humidity and 150M altitude at the stated aftercooler water temperature.
MEASUREMENT LOCATION FOR INLET AIR TEMPERATURE
Location for air temperature measurement air cleaner inlet at stabilized operating conditions.
REFERENCE EXHAUST STACK DIAMETER
The Reference Exhaust Stack Diameter published with this dataset is only used for the calculation of Smoke Opacity values displayed in this dataset. This value does not necessarily represent the actual stack diameter of the engine due to the variety of exhaust stack adapter options available. Consult the price list, engine order or general dimension drawings for the actual stack diameter size ordered or options available.
REFERENCE FUEL
DIESEL
Reference fuel is #2 distillate diesel with a 35API gravity;
A lower heating value is 42,780 KJ/KG (18,390 BTU/LB) when used at 15 deg C (59 deg F), where the density is
850 G/Liter (7.0936 Lbs/Gal).
GAS
Reference natural gas fuel has a lower heating value of 33.74 KJ/L (905 BTU/CU Ft). Low BTU ratings are based on 18.64 KJ/L (500 BTU/CU FT) lower heating value gas. Propane ratings are based on 87.56 KJ/L (2350 BTU/CU Ft) lower heating value gas.
ENGINE POWER (NET) IS THE CORRECTED FLYWHEEL POWER (GROSS) LESS
EXTERNAL AUXILIARY LOAD
Engine corrected gross output includes the power required to drive standard equipment; lube oil, scavenge lube oil, fuel transfer, common rail fuel, separate circuit aftercooler and jacket water pumps. Engine net power available for the external (flywheel) load is calculated by subtracting the sum of auxiliary load from the corrected gross flywheel out put power. Typical auxiliary loads are radiator cooling fans, hydraulic pumps, air compressors and battery charging alternators. For Tier 4 ratings additional Parasitic losses would also include Intake, and Exhaust Restrictions.
ALTITUDE CAPABILITY
Altitude capability is the maximum altitude above sea level at standard temperature and standard pressure at which the engine could develop full rated output power on the current performance data set.
Standard temperature values versus altitude could be seen on TM2001.
When viewing the altitude capability chart the ambient temperature is the inlet air temp at the compressor inlet.
Engines with ADEM MEUI and HEUI fuel systems operating at conditions above the defined altitude capability derate for atmospheric pressure and temperature conditions outside the values defined, see TM2001.
Mechanical governor controlled unit injector engines require a setting change for operation at conditions above the altitude defined on the engine performance sheet. See your Caterpillar technical representative for non standard ratings.
REGULATIONS AND PRODUCT COMPLIANCE
TMI Emissions information is presented at 'nominal' and 'Potential Site Variation' values for standard ratings. No tolerances are applied to the emissions data. These values are subject to change at any time. The controlling federal and local emission requirements need to be verified by your Caterpillar technical representative.
Customer's may have special emission site requirements that need to be verified by the Caterpillar Product Group engineer.
EMISSION CYCLE LIMITS:

PERFORMANCE DATA[EM3838]

Cycle emissions Max Limits apply to cycle-weighted averages only. Emissions at individual load points may exceed the cycle-weighted limit.
WET & DRY EXHAUST/EMISSIONS DESCRIPTION:
Wet - Total exhaust flow or concentration of total exhaust flow
Dry - Total exhaust flow minus water vapor or concentration of exhaust flow with water vapor excluded
EMISSIONS DEFINITIONS:
Emissions : DM1176
EMISSION CYCLE DEFINITIONS
1. For constant-speed marine engines for ship main propulsion, including,diesel-electric drive, test cycle E2 shall be applied, for controllable-pitch propeller sets
test cycle E2 shall be applied.
2. For propeller-law-operated main and propeller-law-operated auxiliary engines the test cycle E3 shall be applied.
3. For constant-speed auxiliary engines test cycle D2 shall be applied.
4. For variable-speed, variable-load auxiliary engines, not included above, test cycle C1 shall be applied.
HEAT REJECTION DEFINITIONS:
Diesel Circuit Type and HHV Balance : DM9500
HIGH DISPLACEMENT (HD) DEFINITIONS:
3500: EM1500
RATING DEFINITIONS:
Agriculture : TM6008
Fire Pump : TM6009
Generator Set : TM6035
Generator (Gas) : TM6041
Industrial Diesel : TM6010
Industrial (Gas) : TM6040
Irrigation : TM5749
Locomotive : TM6037
Marine Auxiliary : TM6036
Marine Prop (Except 3600) : TM5747
Marine Prop (3600 only) : TM5748
MSHA : TM6042
Oil Field (Petroleum) : TM6011
Off-Highway Truck : TM6039
On-Highway Truck : TM6038
SOUND DEFINITIONS:
Sound Power : DM8702
Sound Pressure : TM7080
Date Released : 03/12/24

Systems Data
Reference Number: EM3838

November 25, 2024
For Help Desk Phone Numbers
Click Here

AIR INTAKE SYSTEM		
THE INSTALLED SYSTEM MUST COMPLY WITH THE SYSTEM LIMITS BELOW FOR ALL EMISSIONS CERTIFIED ENGINES TO ASSURE REGULATORY COMPLIANCE.		
MAXIMUM ALLOWABLE INTAKE RESTRICTION WITH CLEAN ELEMENT	15	IN-H20
MAXIMUM ALLOWABLE INTAKE RESTRICTION WITH DIRTY ELEMENT	25	IN-H20
MAXIMUM ATAAC OUTLET TEMPERATURE (25C/77F DAY)	120	DEG F
MAXIMUM PRESSURE DROP FROM COMPRESSOR OUTLET TO MANIFOLD INLET (OR MIXER INLET FOR EGR)	6.2	IN-HG
MAXIMUM ALLOWABLE STATIC WEIGHT ON AIR INLET	3.7	LB
MAXIMUM ALLOWABLE STATIC BENDING MOMENT ON AIR INLET	1.3	LB-FT
MAXIMUM ALLOWABLE STATIC WEIGHT ON TURBO OUTLET CONNECTION	1.5	LB
MAXIMUM ALLOWABLE STATIC BENDING MOMENT ON TURBO OUTLET CONNECTION	0.3	LB-FT
COOLING SYSTEM		
ENGINE ONLY COOLANT CAPACITY	5.5	GAL
MAXIMUM ALLOWABLE JACKET WATER OUTLET TEMPERATURE	207	DEG F
REGULATOR LOCATION FOR JW (HT) CIRCUIT	OUTLET	
MAXIMUM UNINTERRUPTED FILL RATE	5.0	G/MIN
MAXIMUM UNINTERRUPTED FILL RATE	5.0	G/MIN
MINIMUM COOLANT LOSS WITHOUT IMPACTING RADIATOR PERFORMANCE (PERCENT OF TOTAL)	12	PERCENT
COOLANT LOSS-MAXIMUM PERCENTAGE OF PUMP PRESSURE RISE LOSS	10	PERCENT
CHARGE AIR TEMPERATURE CONTROL TYPE	FLOATING	
ENGINE SPEC SYSTEM		
CYLINDER ARRANGEMENT	INLINE	
CYLINDER ARRANGEMENT	INLINE	
NUMBER OF CYLINDERS	6	
NUMBER OF CYLINDERS	6	
CYLINDER BORE DIAMETER	5.7	IN
PISTON STROKE	7.2	IN
TOTAL CYLINDER DISPLACEMENT	1105	CU IN
STANDARD CRANKSHAFT ROTATION FROM FLYWHEEL END	CCW	
STANDARD CYLINDER FIRING ORDER	1-5-3-6-2-4	
NUMBER 1 CYLINDER LOCATION	FRONT	
NUMBER 1 CYLINDER LOCATION	FRONT	
STROKES/COMBUSTION CYCLE	4	
STROKES/COMBUSTION CYCLE	4	
EXHAUST SYSTEM		
THE INSTALLED SYSTEM MUST COMPLY WITH THE SYSTEM LIMITS BELOW FOR ALL EMISSIONS CERTIFIED ENGINES TO ASSURE REGULATORY COMPLIANCE.		
MAXIMUM ALLOWABLE SYSTEM BACK PRESSURE	40	IN-H20
MANIFOLD TYPE	DRY	

EXHAUST PIPE DIAMETER AFTER TC	5.5	IN
FUEL SYSTEM		
MAXIMUM FUEL FLOW FROM TRANSFER PUMP TO ENGINE	111.0	G/HR
MAXIMUM ALLOWABLE FUEL SUPPLY LINE RESTRICTION	8.0	IN-HG
MAXIMUM ALLOWABLE FUEL TEMPERATURE AT TRANSFER PUMP INLET	174	DEG F
MAXIMUM FUEL FLOW TO RETURN LINE FROM ENGINE	103.0	G/HR
MAXIMUM ALLOWABLE FUEL RETURN LINE RESTRICTION	14.8	IN-HG
NORMAL FUEL PRESSURE IN A CLEAN SYSTEM	101.5	PSI
FUEL SYSTEM TYPE	MEUI	
MAXIMUM TRANSFER PUMP PRIMING LIFT WITHOUT PRIMING PUMP	12.1	FT
LUBE SYSTEM		
LUBE SYSTEM OIL COOLER TYPE	SHELL & TUBE	
CRANKCASE VENTILATION TYPE	TO ATMOSPHERE	
MOUNTING SYSTEM		
DRY WEIGHT - ENGINE ONLY (REFERENCE VALUE)	3803	LB
LENGTH - ENGINE ONLY (REFERENCE VALUE)	67	IN
HEIGHT - ENGINE ONLY (REFERENCE VALUE)	50	IN
WIDTH - ENGINE ONLY (REFERENCE VALUE)	37	IN
STARTING SYSTEM		
MINIMUM CRANKING SPEED REQUIRED FOR START	100	RPM
LOWEST AMBIENT START TEMPERATURE WITHOUT AIDS	32	DEG F

PACKAGE DATA [C18PD1A]

NOVEMBER 25, 2024

For Help Desk Phone Numbers Click here

Feature Code:	C18PD1A	**Rating Type:**	STANDBY	**Sales model Package:**	D650-2
Engine Sales Model:	C18PD	**Engine Arrangement Number:**	5365365	**Hertz:**	60
EKW W/F:	650.0	**Noise Reduction:**	0 dBA	**Back Pressure:**	0.0 inH2O

Engine Package Information

Engine Package Data

Package Cooling Information

Open Cooling Data

% Load	Airflow Rate scfm			Ambient Capability Sea Level (Deg F)			Ambient Capability 300 m (Deg F)			Ambient Capability 600 m (Deg F)			Ambient Capability 900 m (Deg F)		
	0 inH2O	1/2 inH2O	3/4 inH2O	0 inH2O	1/2 inH2O	3/4 inH2O	0 inH2O	1/2 inH2O	3/4 inH2O	0 inH2O	1/2 inH2O	3/4 inH2O	0 inH2O	1/2 inH2O	3/4 inH2O
100.0	35844	31747	31253	140	136	134	136	132	131	132	129	127	129	125	123
75.0	35844	31747	31253	152	149	147	149	145	143	145	141	140	141	138	136
50.0	35844	31747	31253	165	161	159	161	158	156	158	154	152	154	150	149
25.0	35844	31747	31253	179	176	172	176	172	168	172	168	165	168	165	161

SA Level 1 Canopy Cooling Data

% Load	Airflow Rate scfm	Ambient Capability Sea Level (Deg F)	Ambient Capability 300 m (Deg F)	Ambient Capability 600 m (Deg F)	Ambient Capability 900 m (Deg F)
100.0	26874	127	123	120	116
75.0	26874	141	138	134	131
50.0	26874	156	152	149	145
25.0	26874	170	167	163	159

WP Canopy - Critical Cooling Data

% Load	Airflow Rate scfm	Ambient Capability Sea Level (Deg F)	Ambient Capability 300 m (Deg F)	Ambient Capability 600 m (Deg F)	Ambient Capability 900 m (Deg F)
100.0	26874	123	120	116	113
75.0	26874	138	134	131	127
50.0	26874	152	149	145	141
25.0	26874	167	163	159	156

Package Sound Information

Sound Comments :

Open Sound Data

Distance: 3.3 Feet

EKW W/F	% LOAD	OVERALL SOUND DB(A)	OBCF 125HZ DB	OBCF 250HZ DB	OBCF 500HZ DB	OBCF 1000HZ DB	OBCF 2000HZ DB	OBCF 4000HZ DB	OBCF 8000HZ DB
650.0	100.0	104.1	99.8	101.4	100.2	98.9	96.1	93.3	95.9
487.5	75.0	103.7	99.4	101.4	100.3	98.9	95.5	92.2	93.9
325.0	50.0	103.2	99.0	101.4	100.2	98.7	94.7	91.3	91.6
162.5	25.0	102.6	98.5	101.3	99.9	98.1	93.9	90.4	88.8

Distance: 23.0 Feet

EKW W/F	% LOAD	OVERALL SOUND DB(A)	OBCF 125HZ DB	OBCF 250HZ DB	OBCF 500HZ DB	OBCF 1000HZ DB	OBCF 2000HZ DB	OBCF 4000HZ DB	OBCF 8000HZ DB
650.0	100.0	94.1	89.8	91.4	90.2	88.9	86.1	83.3	85.9
487.5	75.0	93.7	89.4	91.4	90.3	88.9	85.5	82.2	83.9
325.0	50.0	93.2	89.0	91.4	90.2	88.7	84.7	81.3	81.6
162.5	25.0	92.6	88.5	91.3	89.9	88.1	83.9	80.4	78.8

Distance: 49.2 Feet

EKW W/F	% LOAD	OVERALL SOUND DB(A)	OBCF 125HZ DB	OBCF 250HZ DB	OBCF 500HZ DB	OBCF 1000HZ DB	OBCF 2000HZ DB	OBCF 4000HZ DB	OBCF 8000HZ DB
650.0	100.0	88.1	83.8	85.4	84.2	82.9	80.1	77.3	79.9
487.5	75.0	87.7	83.4	85.4	84.3	82.9	79.5	76.2	77.9
325.0	50.0	87.2	83.0	85.4	84.2	82.7	78.7	75.3	75.6
162.5	25.0	86.6	82.5	85.3	83.9	82.1	77.9	74.4	72.8

SA Level 1 Canopy Sound Data

Distance: 3.3 Feet

EKW W/F	% LOAD	OVERALL SOUND DB(A)	OBCF 125HZ DB	OBCF 250HZ DB	OBCF 500HZ DB	OBCF 1000HZ DB	OBCF 2000HZ DB	OBCF 4000HZ DB	OBCF 8000HZ DB
650.0	100.0	84.9	93.6	88.8	81.2	76.2	71.3	68.8	71.4
487.5	75.0	84.3	92.4	88.4	80.9	76.0	70.6	67.0	68.7
325.0	50.0	83.7	91.0	88.0	80.7	75.7	69.8	65.7	66.1
162.5	25.0	83.2	89.4	87.8	80.5	75.3	69.1	64.8	63.3

Distance: 23.0 Feet

EKW W/F	% LOAD	OVERALL SOUND DB(A)	OBCF 125HZ DB	OBCF 250HZ DB	OBCF 500HZ DB	OBCF 1000HZ DB	OBCF 2000HZ DB	OBCF 4000HZ DB	OBCF 8000HZ DB
650.0	100.0	75.0	81.8	76.9	73.0	68.1	62.4	59.6	61.3
487.5	75.0	74.5	81.0	76.5	73.0	67.7	61.5	57.9	58.8
325.0	50.0	74.1	79.8	76.0	72.9	67.4	60.7	56.6	56.5
162.5	25.0	73.6	78.1	75.5	72.7	67.2	60.1	55.6	54.2

Distance: 49.2 Feet

EKW W/F	% LOAD	OVERALL SOUND DB(A)	OBCF 125HZ DB	OBCF 250HZ DB	OBCF 500HZ DB	OBCF 1000HZ DB	OBCF 2000HZ DB	OBCF 4000HZ DB	OBCF 8000HZ DB
650.0	100.0	69.0	75.8	70.9	67.0	62.1	56.4	53.6	55.3
487.5	75.0	68.5	75.0	70.5	67.0	61.7	55.5	51.9	52.8
325.0	50.0	68.1	73.8	70.0	66.9	61.4	54.7	50.6	50.5
162.5	25.0	67.6	72.1	69.5	66.7	61.2	54.1	49.6	48.2

WP Canopy - Critical Sound Data

Distance: 3.3 Feet

EKW W/F	% LOAD	OVERALL SOUND DB(A)	OBCF 125HZ DB	OBCF 250HZ DB	OBCF 500HZ DB	OBCF 1000HZ DB	OBCF 2000HZ DB	OBCF 4000HZ DB	OBCF 8000HZ DB
650.0	100.0	94.3	102.0	93.8	90.7	86.6	82.2	82.2	88.1
487.5	75.0	93.0	101.1	93.4	90.2	85.9	80.7	79.7	83.9
325.0	50.0	91.8	99.8	92.9	89.7	85.1	79.2	77.6	79.6
162.5	25.0	90.8	97.9	92.4	89.1	84.1	77.6	75.9	75.3

Distance: 23.0 Feet

EKW W/F	% LOAD	OVERALL SOUND DB(A)	OBCF 125HZ DB	OBCF 250HZ DB	OBCF 500HZ DB	OBCF 1000HZ DB	OBCF 2000HZ DB	OBCF 4000HZ DB	OBCF 8000HZ DB
650.0	100.0	86.2	92.4	85.8	80.1	79.7	76.0	76.6	79.5
487.5	75.0	85.3	92.9	84.9	80.3	79.3	75.2	74.9	75.9
325.0	50.0	84.4	92.0	84.3	80.2	78.9	74.1	73.0	72.7
162.5	25.0	83.4	89.7	89.8	79.8	78.5	72.6	71.1	69.8

Open Exhaust Sound Data

Distance: 3.3 Feet

EKW W/F	% LOAD	OVERALL SOUND DB(A)	OBCF 125HZ DB	OBCF 250HZ DB	OBCF 500HZ DB	OBCF 1000HZ DB	OBCF 2000HZ DB	OBCF 4000HZ DB	OBCF 8000HZ DB
650.0	100.0	115.2	121.6	117.1	112.7	106.3	107.4	103.3	90.3
487.5	75.0	113.6	119.5	117.0	111.5	103.7	104.4	99.8	84.7
325.0	50.0	110.2	117.1	113.7	107.8	100.2	100.9	96.1	78.3
162.5	25.0	105.6	113.1	108.2	102.3	96.8	97.1	92.1	73.5

Distance: 23.0 Feet

EKW W/F	% LOAD	OVERALL SOUND DB(A)	OBCF 125HZ DB	OBCF 250HZ DB	OBCF 500HZ DB	OBCF 1000HZ DB	OBCF 2000HZ DB	OBCF 4000HZ DB	OBCF 8000HZ DB
650.0	100.0	105.2	111.6	107.1	102.7	96.3	97.4	93.3	80.3
487.5	75.0	103.6	109.5	107.0	101.5	93.7	94.4	89.8	74.7
325.0	50.0	100.2	107.1	103.7	97.8	90.2	90.9	86.1	68.3
162.5	25.0	95.6	103.1	98.2	92.3	86.8	87.1	82.1	63.5

Distance: 49.2 Feet

EKW W/F	% LOAD	OVERALL SOUND DB(A)	OBCF 125HZ DB	OBCF 250HZ DB	OBCF 500HZ DB	OBCF 1000HZ DB	OBCF 2000HZ DB	OBCF 4000HZ DB	OBCF 8000HZ DB
650.0	100.0	99.2	105.6	101.1	96.7	90.3	91.4	87.3	74.3
487.5	75.0	97.6	103.5	101.0	95.5	87.7	88.4	83.8	68.7
325.0	50.0	94.2	101.1	97.7	91.8	84.2	84.9	80.1	62.3
162.5	25.0	89.6	97.1	92.2	86.3	80.8	81.1	76.1	57.5

Open Mechanical Sound Data

Distance: 3.3 Feet

EKW W/F	% LOAD	OVERALL SOUND DB(A)	OBCF 125HZ DB	OBCF 250HZ DB	OBCF 500HZ DB	OBCF 1000HZ DB	OBCF 2000HZ DB	OBCF 4000HZ DB	OBCF 8000HZ DB
650.0	100.0	104.1	99.8	101.4	100.2	98.9	96.1	93.3	95.9
487.5	75.0	103.7	99.4	101.4	100.3	98.9	95.5	92.2	93.9
325.0	50.0	103.2	99.0	101.4	100.2	98.7	94.7	91.3	91.6
162.5	25.0	102.6	98.5	101.3	99.9	98.1	93.9	90.4	88.8

Distance: 23.0 Feet

EKW W/F	% LOAD	OVERALL SOUND DB(A)	OBCF 125HZ DB	OBCF 250HZ DB	OBCF 500HZ DB	OBCF 1000HZ DB	OBCF 2000HZ DB	OBCF 4000HZ DB	OBCF 8000HZ DB
650.0	100.0	94.1	89.8	91.4	90.2	88.9	86.1	83.3	85.9
487.5	75.0	93.7	89.4	91.4	90.3	88.9	85.5	82.2	83.9
325.0	50.0	93.2	89.0	91.4	90.2	88.7	84.7	81.3	81.6
162.5	25.0	92.6	88.5	91.3	89.9	88.1	83.9	80.4	78.8

Distance: 49.2 Feet

EKW W/F	% LOAD	OVERALL SOUND DB(A)	OBCF 125HZ DB	OBCF 250HZ DB	OBCF 500HZ DB	OBCF 1000HZ DB	OBCF 2000HZ DB	OBCF 4000HZ DB	OBCF 8000HZ DB
650.0	100.0	88.1	83.8	85.4	84.2	82.9	80.1	77.3	79.9
487.5	75.0	87.7	83.4	85.4	84.3	82.9	79.5	76.2	77.9
325.0	50.0	87.2	83.0	85.4	84.2	82.7	78.7	75.3	75.6
162.5	25.0	86.6	82.5	85.3	83.9	82.1	77.9	74.4	72.8

Caterpillar Confidential: **Green**
Content Owner: Commercial Processes Division
Web Master(s): PSG Web Based Systems Support
Current Date: 11/25/2024, 2:43:41 PM
© Caterpillar Inc. 2024 All Rights Reserved.
Data Privacy Statement.
Cookie Settings

UNITED STATES ENVIRONMENTAL PROTECTION AGENCY
2024 MODEL YEAR
CERTIFICATE OF CONFORMITY
WITH THE CLEAN AIR ACT

OFFICE OF TRANSPORTATION AND AIR QUALITY
ANN ARBOR, MICHIGAN 48105

Certificate Issued To: **Caterpillar Inc.**
(U.S. Manufacturer or Importer)

Certificate Number: RCPXL18.1NYS-033

Effective Date: 08/08/2023

Expiration Date: 12/31/2024

Byron J. Bunker, Division Director
Compliance Division

Issue Date: 08/08/2023

Revision Date: N/A

Model Year: 2024
Manufacturer Type: Original Engine Manufacturer
Engine Family: RCPXL18.1NYS

Mobile/Stationary Indicator: Stationary
Emissions Power Category: 560<kW<=2237
Fuel Type: Diesel
After Treatment Devices: No After Treatment Devices Installed
Non-after Treatment Devices: Electronic Control, Engine Design Modification

Pursuant to Section 111 and Section 213 of the Clean Air Act (42 U.S.C. sections 7411 and 7547) and 40 CFR Part 60, and subject to the terms and conditions prescribed in those provisions, this certificate of conformity is hereby issued with respect to the test engines which have been found to conform to applicable requirements and which represent the following engines, by engine family, more fully described in the documentation required by 40 CFR Part 60 and produced in the stated model year.

This certificate of conformity covers only those new compression-ignition engines which conform in all material respects to the design specifications that applied to those engines described in the documentation required by 40 CFR Part 60 and which are produced during the model year stated on this certificate of the said manufacturer, as defined in 40 CFR Part 60.

It is a term of this certificate that the manufacturer shall consent to all inspections described in 40 CFR 1068 and authorized in a warrant or court order. Failure to comply with the requirements of such a warrant or court order may lead to revocation or suspension of this certificate for reasons specified in 40 CFR Part 60. It is also a term of this certificate that this certificate may be revoked or suspended or rendered void *ab initio* for other reasons specified in 40 CFR Part 60.

This certificate does not cover engines sold, offered for sale, or introduced, or delivered for introduction, into commerce in the U.S. prior to the effective date of the certificate.

ULCERT
UL 2200 LISTING

INCLUDES THE FOLLOWING:

ALTERNATOR
Alternator insulation system is UL Recognized (UL 1446). PMG and AREP alternators are available. Automatic voltage regulators are UL Recognized.

WIRE HARNESS
AC, DC, and power harnesses are made with UL Listed wire and UL Listed terminals.

CONTROL PANEL
Control panels are comprised of UL Listed and UL Recognized components. EMCP is UL Recognized.

CIRCUIT BREAKER
Output circuit breaker is 100% rated and UL Listed.

TESTING
All UL Listed sets are designed and rigorously tested in accordance with UL Standard for Safety, UL 2200.

LABELING
Labeling meets UL requirements.

MECHANICAL OPTIONS
Mechanical options do not require UL Listing and, therefore, are not affected. The exceptions to this are:

FUEL TANKS
If a fuel tank is ordered with the unit, it must be UL Listed. Two versions are available: 24 hour integral (FCUL2) and 24/48 hour sub-base (FSBT)

ENCLOSURES
Factory installed enclosures meet UL requirements. Weatherproof and sound attenuated versions are available.

ELECTRICAL OPTIONS
The table below shows electrical options that meet UL requirements:

EOS	Lube Oil Sump Heater
WCA1	Low Coolant Level Shutdown
WSS1	Low Coolant Temperature Alarm
AH1H	Anti-Condensation Heater
WHH	Coolant Heater
GOVES	Electronic Governor (Fully Adjustable)
FSS1	Critical Low Fuel Level Shutdown
FSS2	Low Fuel Level Alarm
FSSS	Critical High Fuel Alarm
PBCSUL	UL Listed Battery Charger
PBC10NU	NFPA Battery Charger, UL Listed

UL Listing is available on all diesel fuelled generator sets up to 17S kW at 60 Hz, 600 vac maximum.

LEHE0410-01 (11-18)

BUILT FOR IT.

www.Cat.com/electricpower
©2018 Caterpillar All rights reserved. Materials and specifications are subject to change without notice. The International System of Units (SI) is used in this publication. CAT, CATERPILLAR, their respective logos, ADEM, S•O•S, "BUILT FOR IT", "Caterpillar Yellow", the "Power Edge" trade dress as well as corporate and product identity used herein, are trademarks of Caterpillar and may not be used without permission.

Caterpillar: Confidential Green

CERTIFICATE OF COMPLIANCE

SEISMIC DESIGN OF NONSTRUCTURAL COMPONENTS AND SYSTEMS

Certification No.

VMA-50365-01C (Revision 13)

Expiration Date: 9/30/2023

Certification Parameters:

The nonstructural products (mechanical and/or electrical components) listed on this certificate are CERTIFIED[1] FOR SEISMIC APPLICATIONS in accordance with the following building code[2] releases.

IBC 2018, 2015, 2012, 2009, 2006

The following model designations, options, and accessories are included in this certification. Reference report number VMA-50365-01 as issued by The VMC Group for a complete list of certified models, included accessories/options, and certified installation methods.

Caterpillar; Diesel Gensets

Series C4.4LC, C4.4, C6.6, C7.1, C9, C13, C15, C18

The above referenced equipment is **APPROVED** for seismic application when properly installed[3], used as intended, and contains a Seismic Certification Label referencing this Certificate of Compliance[4]. As limited by the tabulated values, below grade, grade, and roof-level installations, installations in essential facilities, for life safety applications, and/or of equipment containing hazardous contents are permitted and included in this certification with an Equipment Importance Factor assigned as I_p=1.5. The equipment is qualified by comparative analysis and successful seismic shake table testing at the nationally recognized University of California Berkeley Pacific Earthquake Engineering Research Center and CERL (US Army Corp. of Engineers) Laboratory under the review of the ISO Accredited Product Certification Agency, the VMC Group.

Certified Seismic Design Levels			
Certified IBC	**Importance $I_p \leq 1.5$** Soil Classes A-E Risk Categories I-IV Design Categories A-F	z/h ≤ 1.0	z/h = 0.0
		$S_{DS} \leq 0.753$ g	$S_{DS} \leq 2.260$ g

Certified Seismic Installation Methods[8]	
Rigid Mounting From Unit Base To Rigid Structure	Rigid Mounting From Unit Base To Fuel Tank
External Isolation Mounting From Unit Base To Rigid Structure	

HEADQUARTERS
113 Main Street
Bloomingdale, NJ 07403
Phone: 973.838.1780
Toll Free: 800.569.8423
Fax: 973.492.8430

CALIFORNIA
180 Promenade Circle
Suite 300
Sacramento, CA 95834
Phone: 916.634.7771

TEXAS
11930 Brittmoore Park Drive
Houston, TX 77041
Phone: 713.466.0003
Fax: 713.466.1355

thevmcgroup.com

CERTIFICATE OF COMPLIANCE

SEISMIC DESIGN OF NONSTRUCTURAL COMPONENTS AND SYSTEMS

Certified Product Table:

Series	Max Rating [kW]	EPA Rating	Length [in]	Width [in]	Height [in]	Max. Off Tank Weight [lbs]	Max. On Tank Weight [lbs]	S_{DS} at z/h=0.0	S_{DS} at z/h=1.0	Certified Installation Methods
C4.4LC	60	Tier 3	98	43	78	2,293	4,979	2.49	0.83	Rigid
C4.4	100		136	44	92	3,961	8,516			
C6.6	175		198		96	5,080	12,752			
C7.1	200					5,338	13,010			
C9	300		219	81	114	8,364	19,850	2.26	0.75	Rigid and Externally Spring Isolated
C13	400		286		124	11,036	30,864			
C15	450		251		127	11,393	28,504			
	500	Tier 2				11,923	29,034			
C18	600		286		124	12,179	32,031			
	500	Tier 4F	247	90	111	13,720	21,687			
	750	Tier 2	275	91	106	15,585	N/A			Rigid
						N/A	28,209		1.29	

Group	Type	SDS (z/h=0)	SDS (z/h=1)	A_{Flex-H}	A_{Rig-H}	A_{Flex-V}	A_{Rig-V}	F_p/W_p
Seismic	AC156	2.26	0.75	2.26	0.9	1.51	0.6	0.54

Notes:
1. Weights include genset, enclosure (where applicable), tank and fuel (where applicable)
2. For a detailed list of weights, certified installation methods, and certified seismic design levels please refer to the certification report referenced on the first page of this certificate.

This certification includes the open generator set and the enclosed generator set when installed with or without the sub-base tank. This certification also includes the sub-base tank as a stand-alone accessory. The generator set and included options shall be a catalogue design and factory supplied. The generator set and applicable options shall be installed and attached to the building structure per the manufacturer supplied seismic installation instructions. For a list of certified configurations and options please directly contact the manufacturer. This certification excludes all non-factory supplied accessories, including but not limited to mufflers, isolation/restraint devices, remote control panels, remote radiators, pumps and other electrical/mechanical components.

IBC CERTIFIED VMC GROUP

VMA-50365-01C (Revision 13)
Issue Date: Friday, May 6, 2016
Revision Date: Friday, November 20, 2020
Expiration Date: Saturday, September 30, 2023

CERTIFICATE OF COMPLIANCE

SEISMIC DESIGN OF NONSTRUCTURAL COMPONENTS AND SYSTEMS

Notes & Comments:

1. All equipment listed herein successfully passed the seismic acceptance criteria for shake testing non-structural components and systems as set forth in the ICC AC-156. The Test Response Spectrum (TRS) enveloped the Required Response Spectrum (RRS) for all units tested. The tested units were representative sample(s) of a contingent of models and all remained captive and structurally sound after the seismic shake simulation. The units also remained functionally operational after the simulation testing as functional testing was completed by the equipment manufacturer before and after the seismic simulations. Although a seismic qualified unit inherently contains some wind resisting capacity, that capacity is undetermined and is excluded from this certification. Snow/Ice loads have been neglected and thus limit the unit to be installed both indoors (covered by an independent protective structure) and out of doors (exposed to accumulating snow/ice) for ground snow loads no greater than 30 psf for all applications.

2. The following building codes are addressed under this certification:
   IBC 2018 referencing ASCE7-16 and ICC-ES AC-156
   IBC 2015 referencing ASCE7-10 and ICC-ES AC-156
   IBC 2012 referencing ASCE7-10 and ICC-ES AC-156
   IBC 2009 referencing ASCE7-05 and ICC-ES AC-156
   IBC 2006 referencing ASCE7-05 and ICC-ES AC-156

3. Refer to the manufacturer supplied installation drawings for anchor requirements and mounting considerations for seismic applications. Required anchor locations, size, style, and load capacities (tension and shear) may be specified on the installation drawings or specified by a 3rd party. Mounting requirement details such as anchor brand, type, embedment depth, edge spacing, anchor-to-anchor spacing, concrete strength, special inspection, wall design, and attachment to non-building structures must be outlined and approved by the Engineer of Record for the project or building. Structural walls, structural floors, and housekeeping pads must also be seismically designed and approved by the project or building Structural Engineer of Record to withstand the seismic anchor loads as defined on the installation drawings. The installing contractor is responsible for ensuring the proper installation of all anchors and mounting hardware.

4. For this certificate and certification to remain valid, this certificate must correspond to the "Seismic Certification Label" found affixed to the unit by the factory. The label ensures the manufacturer built the unit in conformance to the IBC seismic design criteria set forth by the Certified Seismic Qualification Agency, the VMC Group, and meets the seismic design levels claimed by this certificate.

5. Mechanical, Electrical, and Plumbing connections to the equipment must be flexibly attached as to not transfer load through the connection. The structural integrity of any conduit, cable trays, piping, ductwork and/or flexible connections is the responsibility of others. This certification does not guarantee the equipment will remain compliant to NEMA, IP, UL, or CSA standards after a seismic event.

6. This certificate applies to units manufactured at:
   1720 West Kingsbury Street, Seguin, TX 78155
   Rodovia Luiz de Queiorz-KM 157 CEP 13420-900, Piracicaba/SP-Brazil

7. This certification follows the VMC Group's ISO-17065 Scheme.

8. The certified seismic installation methods states are a summary for all series this certificate covers, for more detailed information on the certified seismic installation methods, see the certified product tables.

John P. Giuliano, PE
President, VMC Group

VMA-50365-01C (Revision 13)
Issue Date: Friday, May 6, 2016
Revision Date: Friday, November 20, 2020
Expiration Date: Saturday, September 30, 2023

CATERPILLAR®

Quinn Power Systems

Project # / Name:		**Genset ID#**	
Startup Level:		**Genset Serial#**	
Customer:			
Contact Name		**Contact Number**	

Pre-Startup Checklist

This document is provided to assist in the startup of your Caterpillar Equipment. Each checklist item below is to be completed prior to commencement of startup activities. This information will also help to insure against the probability of incurring additional expense.

It is mandatory this document be completed and returned to QPS via the original e-mail sender; indicating the current equipment status, expected completion dates of incomplete items and the requested startup date. Please send photos of noted items as verification of completion. (**Note:** all incomplete items are required to be completed before startup personnel arrive on site).

A minimum of **three/four week notice** is recommended to schedule resources for startup. This does not guarantee availability of startup personnel. Your project manager will coordinate all startup activities with you.

Requested Start-up Date:		**Form Completed by:**	
Start-up Address:	**City:**	**State:**	**Zip Code:**
Site Contact:	**Contact Cell Number:**	**Contact Company:**	
Alternate Site Contact:	**Alternate Contact Cell Number:**	**Contact Company:**	
Security Clearance Required: If yes details need to be provided below in the comments section.	**Noise restrictions: If yes details need to be provided below in the comments section.(provide start/end time)**	**Site Safety Orientation Required:**	**PPE Requirements: If yes please list PPE requirements below in the comments section.**
☐ **Yes** ☐**No**	☐**Yes** ☐ **No**	☐ **Yes** ☐**No**	☐ **Yes** ☐**No**
Comments			

If Quinn Technician arrives on site and the conditions are not found to be in the stated conditions of completion, Quinn Power Systems reserves the right to charge for additional compensation outside the agreed upon contract documents. If the Customer requests, requires, or authorizes Quinn Power Systems to perform any services in addition to the agreed upon Scope of Work the Customer shall pay Quinn Power Systems for such Additional Services at current Quinn Power Systems field service rates. The Customer shall also reimburse Quinn Power Systems for all mileage and travel expenses, subcontractors, dealer technicians, material and equipment incurred in the performance of additional work.

CATERPILLAR®

Quinn Power Systems

EQUIPMENT	STATUS	EXPECTED COMPLETION DATE
Items to be completed before requesting startup scheduling:		
1. Air quality permits obtained / Permit to operate (AQMD, Ventura, SJVAPCD, etc.). **Please submit a PDF copy**		
2. Generator and additional supplied (shipped loose) equipment is set in place (anchored) or mounted. [* Avoid top entry on outdoor rated equipment] **Send Photo**		
3. Coordination Study, if necessary has been completed and addressed prior to startup.	☐Yes ☐No ☐N/A	
4. All Utility and Generator connections terminated and available? **Send Photo**	☐Yes ☐No ☐N/A	
5. All source and feeder cables are installed, terminated and tested per all drawings and codes. **Send Photo**	☐ Yes ☐No ☐N/A	
Items to be completed before startup activities commence (if not applicable list as N/A):		
6. Exhaust systems complete and fully installed (rain cap, rain shield, gaskets, DPF/Silencer, radiator flow, blankets etc.) [*Ensure all exhaust connections include a gasket] **Send Photo**	☐ Yes ☐No ☐ N/A	
7. Louvers, radiator ducting and/or exhaust fans connected, powered and or unobstructed. **Send Photo**	☐ Yes ☐No ☐N/A	
8. Engine batteries and racks installed on each generator. **Send Photo**	☐ Yes ☐No ☐N/A	
9. Confirm AC shore power available at Generator (Battery charger/Space Heater/etc.). **Send Photo**	☐ Yes ☐No ☐N/A	
10. Confirm acceptable fluid levels. (Coolant, Oil, Urea, Etc.) [* Advise of any deficiencies prior to tech arrival]	☐Yes ☐No ☐N/A	
11. Complete installation/support of shipped loose fuel vent extensions. **Send Photo**	☐Yes ☐No ☐N/A	
12. Fuel tank, Day tank and or Gas piping installation complete.	☐ Yes ☐No ☐N/A	
13. Fuel delivery complete including coordination with inspector/fire marshal, please ensure this is complete or scheduled no later than the morning of the 1st Quinn tech visit. [*For Diesel Gensets, it is recommended to have at least 90% of capacity to test alarms/floats (Diesel #2 Ultra low Sulfur fuel)]	☐Yes ☐No ☐N/A	
14. Field wiring complete from generator to (ATS, MTS, Quick connect, Loadbank, DPF, Remote E-stop buttons, etc.) **Send Photo**	☐ Yes ☐No ☐N/A	
15. Communication cabling installed for remote access, BMS, Remote annunciators, etc. **Send Photo**	☐Yes ☐No ☐N/A	
16. Building load available for NFPA 110 testing (2 hr. building load). [* If no building load, confirm approval of 4hr Load Bank test and note a building transfer test, at a later date, will incur additional cost]	☐Yes ☐No ☐N/A	
17. End User has been notified of Start-up and understands that interruptions to the downstream service may occur during building transfer.	☐Yes ☐No ☐N/A	

Name: _____ Date: _____

Title: _____

NFPA 110, 7.13 EPSS Installation Test Procedure

NFPA 110, 7.13 Procedure for EPSS Installation Acceptance

3500 Shepherd St., City of Industry, CA 90601 562-463-6000

Customer	
Site	
	Job Number
Engine M/N	Generator M/N
Engine S/N	Generator S/N
Hours	Gen. Prime No.
Date	Technician

From: **NFPA 110 Standard for Emergency and Standby Power Systems, 2019 Edition**.

Step 1

7.13.1 Upon completion of the installation of the EPSS, the EPS shall be tested to ensure conformity to the requirements of the standard with respect to both power output and function.

7.13.2.2 The test shall be conducted after completion of the installation with all EPSS accessory and support equipment in place and operating.

7.13.4 The EPSS shall perform within the limits specified in this standard.

7.13.4.1 The on-site installation acceptance test shall be conducted in accordance with 7.13.4.1.1 through 7.13.4.1.4.

Procedure		
7.13.4.1.1* In a *new and unoccupied building or facility*, with the prime mover in a cold start condition and the emergency load at operating level, a normal power failure shall be initiated by opening all switches or circuit breakers supplying the normal power to the building or facility. **7.13.4.1.2*** In an *existing occupied building or facility*, with the prime mover in a cold start condition and the emergency load at operating level, a normal power failure shall be simulated by operating at least one transfer switch test function or initiated by opening all switches or breakers supplying normal power to all ATSs that are part of the EPSS being commissioned by this initial acceptance test.		
7.13.4.1.3 When the EPSS consists of paralleled EPS's, the system control function for paralleling and load shedding shall be verified in accordance with system design documentation.		
7.13.4.1.4 The tests conducted in accordance with 7.13.4.1.1 and 7.13.4.1.2 shall be performed in accordance with (1) through (12).		
(1) When the EPSS consists of paralleled EPSs, the quantity of EPSs intended to be operated simultaneously shall be tested simultaneously with building load for the test period identified in 7.13.4.1.4(10).		
(2) The test load shall be all loads that are served by the EPSS. There is no minimum loading requirement for this portion of the test.		
(3) The time delay on start shall be observed and recorded.		Sec
(4) The cranking time until the prime mover starts and runs shall be observed and recorded.		Sec
(5) The time taken to reach operating speed shall be observed and recorded.		Sec
(6)*The engine start function shall be confirmed by verifying operation of the initiating circuit of all transfer switches supplying EPSS loads.		
(7) The time taken to achieve a steady-state condition with all switches transferred to the emergency position shall be observed and recorded.		Sec
(8) The voltage, frequency, and amperes shall be recorded.		
(9) Where applicable, the prime mover oil pressure and water temperature shall be recorded.		
(10) The load test with building load, or other loads that simulate the intended load as specified in Section 5.4, shall be continued for **not less than 2 hours**, and the run time shall be recorded.		

Intervals Start @	Time	Volts			Amps			Kw	Hz	Water Temp	Oil Press	Batt. Charge Rate	Amb Temp
		1	2	3	1	2	3						
Start													
+5 min													
+10 min													
+15 min													
+30 min													
+45 min													
+60 min													
+75 min													
+90 min													
+105 min													
+120 min													

(11) When normal power is restored to the building or facility, the time delay on retransfer to normal power for each switch with a minimum setting of 5 minutes shall be recorded.

Sw-1	Sw-2	Sw-3	Sw-4	Sw-5	Sw-6	Sw-7	Sw-8	

(12) The time delay on the prime mover cooldown period and shutdown shall be recorded.

7.13.4.2 After completion of the test performed in 7.13.4.1, the prime mover shall be allowed to cool for not less than 5 minutes.

Step 2

7.13.4.3* A load shall be applied for a 2-hour, full-load test. The building load shall be permitted to serve as part or all of the load, supplemented by a load bank of sufficient size to provide a load equal to 100 percent of the nameplate kW rating of the EPS, less applicable derating factors for site conditions. With full load applied, the coolant temperature of the generator set shall stabilize at a constant value relative to outdoor ambient temperature at least 30 minutes prior to completion of the test.

7.13.4.3.1 This full-load test shall be initiated after the test specified in 7.13.4.1.4 by any method that starts the prime mover and, upon reaching rated rpm, picks up not less than 30 percent of the nameplate Kw rating for the first 30 minutes, not less than 50 percent of the nameplate Kw rating for the next 30 minutes, and 100 percent of the nameplate Kw rating for the next 60 minutes, less applicable derating factors for site conditions.

7.13.4.3.2 A unity power factor shall be permitted for on-site testing, provided that rated load tests at the rated power factor have been performed by the manufacturer of the EPS prior to shipment.

7.13.4.3.3 Where the EPS is a paralleled multi-unit EPS, each unit shall be permitted to be tested individually at its rating.

7.13.4.3.4 The data specified in 7.13.4.1.4(4), (5), and (7) shall be recorded at first load acceptance of the test period identified in 7.13.4.1.4(10).

(4) The cranking time until the prime mover starts and runs shall be observed and recorded.		Sec
(5) The time taken to reach operating speed shall be observed and recorded.		Sec
(7) The time taken to achieve a steady-state condition with all switches transferred to the emergency position shall be observed and recorded.		Sec

7.13.4.3.5 The data specified in 7.13.4.1.4(8) and 7.13.4.1.4(9) shall be recorded at first load acceptance and every 15 minutes thereafter until the completion of the test period identified in 7.13.4.1.4(10).

(8) The voltage, frequency, and amperes shall be recorded.
(9) Where applicable, record prime mover oil pressure and water temperature.

Full Load Test

Intervals	Time	Volts			Amps			Kw	Hz	Water Temp	Oil Press	Batt. Char	Amb Temp
		1	2	3	1	2	3						
Start													
+5 min													
+10 min													
+15 min													
+30 min													
+45 min													
+60 min													
+75 min													
+90 min													
+105 min													
+120 min													

Step 3

7.13.4.4 Any method recommended by the manufacturer for the cycle crank test shall be utilized to prevent the prime mover from running.

7.13.4.4.1 The control switch shall be set at "run" to cause the prime mover to crank.

7.13.4.4.2 The complete crank/rest cycle specified in 5.6.4.2 and Table 5.6.4.2 shall be observed.

Cranking Method (cycle or continuous)	Cranking Cycle	Rest Period

7.13.4.4.3 The battery charge rate shall be recorded at 5-minute intervals for the first 15 minutes or until charge rate stabilization.

Step 4

7.13.4.5 All safeties specified in 5.6.5 and 5.6.6 shall be tested on site as recommended by the manufacturer.

Exception No 1: It shall be permitted for the manufacturer to test and document overcrank, high engine temperature, low lube oil pressure and overspeed safeties prior to shipment.

Exception No 2: Where the safety functions are proven to be fail-safe as demonstrated by monitoring of normal conditions on engine metering and demonstration that a failed sensor or circuit will not cause shutdown of the engine, further testing of the safeties is not required.

5.6.5.1 A control panel shall be provided and shall contain the following:	Verified
(1) Automatic remote start capability	
(2) "Run-off-automatic" switch	
(3) Shutdowns as required by 5.6.5.2(3)	
(a) Failing to start after specified cranking time	
(b) Overspeed	
(c) Low lubricating oil pressure	
(d) High engine temperature (An automatic engine shutdown device for high lubricating oil temperature shall not be required)	
(e) Operation of remote manual stop station	
(4) Individual alarm indication to annunciate any of the conditions listed in Table 5.6.5.2 and with the following characteristics:	
(a) Battery powered	
(b) Visually indicated.	
(c) Have additional contacts or circuits for a common audible alarm that signals locally and remotely when any of the itemized conditions occurs.	
(d) Have a lamp test switch(es) to test the operation of all alarm lamps.	
(5) Controls to shut down the prime mover upon removal of the initiating signal or manual emergency shutdown	

(6) The ac instruments listed in 5.6.9.9	
5.6.5.3 Engines equipped with a maintaining shutdown device (air shutdown damper) shall have a set of contacts that monitor the position of this device, with local alarm indication and remote annunciation in accordance with Table 5.6.5.2.	
5.6.5.4 The control panel in 5.6.5.2(4) shall be specifically approved for either a Level 1 or a Level 2 EPS consistent with the installation.	
5.6.5.5 The cranking cycle shall be capable of being initiated by any of the following:	
(1) Manual start initiation as specified in 5.6.5.2(2)(a).	
(2) Loss of normal power at any automatic transfer switch (ATS) as part of the EPSS. Prime mover shall start after appropriate time delays, upon operation of a remote switch or set of contacts.	
(3) Clock exerciser located in an ATS or in the control panel.	
(4) Manually operated (test) switch located in each ATS that simulates a loss of power and causes automatic starting and operation until this switch is reset, to cause the engine circuit to duplicate its functions in the same manner commercial power is restored after a true commercial power failure.	
(5) Where an ATS is not used, a signal indicating loss of acceptable power.	
5.6.5.6 All installations shall be provided with at least one remote emergency stop switch for each prime mover.	
5.6.5.6.1 The remote emergency stop switch shall be located outside the room housing the prime mover or exterior enclosure and shall be permitted to be mounted on the exterior of the enclosure.	
5.6.5.6.2 Provisions shall be made so access is limited to qualified persons.	
5.6.5.6.3 The remote emergency stop switch shall identify the prime mover it controls.	
5.6.6* Remote Controls and Alarms. A remote, common audible alarm shall be provided as specified in 5.6.5.2(4).	
5.6.6.1 Alarms and annunciation shall be powered by the prime mover starting battery unless operational constraints make this impracticable. In that circumstance an alternate source from the EPSS, such as storage battery, UPS, or branch circuit supplied by the EPSS, shall be permitted.	
5.6.6.2 The following annunciation shall be provided at a minimum: (1) For Level 1 EPS, local annunciation and facility remote annunciation, or local annunciation and network remote annunciation (2) For Level EPS, local annunciation	
5.6.6.3 For the purposes of defining the types of annunciation in 5.6.6.2, the following shall apply: (1) Local annunciation is located on the equipment itself or within the same equipment room. (2) Facility remote annunciation is located on site but not within the room where the equipment is located. (3) Network remote annunciation is located off site.	
5.6.6.4 An alarm-silencing means shall be provided, and the panel shall include repetitive alarm circuitry so that, after the audible alarm has been silenced, it reactivates after the fault condition has been cleared and has to be restored to its normal position to be silenced again.	
5.6.6.5 In lieu of the requirement in 5.6.6.4, a manual alarm silencing means shall be permitted that silences the audible alarm after the occurrence of the alarm condition, provided such means do not inhibit any subsequent alarms from sounding the audible alarm again without further manual action.	
Battery Tests: Equalize charging of battery cells according to manufacturer's written instructions. Record individual cell voltages. a. Measure charging voltage and voltages between available battery terminals for full-charging and float-charging conditions. Check electrolyte level and specific gravity under both conditions.	
b. Test for contact integrity of all connectors. Perform an integrity load test and a capacity load test for the battery.	
c. Verify acceptance of charge for each element of the battery after discharge.	
d. Verify that measurements are within manufacturer's specifications.	
Battery-Charger Tests: Verify specified rates of charge for both equalizing and float-charging conditions. System Integrity Tests: Methodically verify proper installation, connection, and integrity of each element of engine-generator system before and during system operation. Check for air, exhaust, and fluid leaks.	
Exhaust-System Back-Pressure Tests: Use a manometer with a scale exceeding 40-inch wg (120 kPa). Connect to exhaust line close to engine exhaust manifold. Verify that back pressure at full-rated load is within manufacturer's written allowable limits for the engine.	

System Integrity Tests: Methodically verify proper installation, connection, and integrity of each element of engine-generator system before and during system operation. Check for air, exhaust, and fluid leaks.	

END

Effective with sales to the first user on or after July 1, 2023

CATERPILLAR LIMITED WARRANTY

Industrial, Petroleum, Locomotive, and Agriculture Engine Products and Electric Power Generation Products

Worldwide

Caterpillar Inc. or any of its subsidiaries ("Caterpillar") warrants new and remanufactured engines and electric power generation products (new and new with Cat Reman Engines) sold by it (including any products of other manufacturers packaged and sold by Caterpillar), to be free from defects in material and workmanship.

This warranty does not apply to engines sold for use in on-highway vehicle or marine applications; engines in machines manufactured by or for Caterpillar; C175, 3500 and 3600 series engines used in locomotive applications; 3000 Family engines, C0.5 through C4.4 and ACERT™ (C6.6, C7, C7.1, C9, C9.3, C11, C13, C15, C18, C27, and C32) engines used in industrial, mobile agriculture and locomotive applications; or Cat® batteries; or Electric Power Generation products manufactured or assembled and sold in India except GC models, which are covered by this warranty. These products (except for GC models) are covered by other Caterpillar warranties.

This warranty is subject to the following:

Warranty Period

- For industrial engines, engines in a petroleum applications or Petroleum Power Systems (excluding petroleum fire pump application), or engines in a Locomotive application, or Uninterruptible Power Supply (UPS) systems, the warranty period is 12 months after date of delivery to the first user.
- For engines used in petroleum fire pump and mobile agriculture applications the warranty period is 24 months after date of delivery to the first user.
- For controls only (EPIC), configurable and custom switchgear products, and automatic transfer switch products, the warranty period is 24 months after date of delivery to the first user.
- For new CG132, CG170 and CG260 series power generation products the warranty period is 24 months after date of delivery to first user, but not to exceed 36 months from shipment from the Caterpillar place of manufacture.
- For electric power generation products other than CG132, CG170 and CG260 series in prime or continuous applications the warranty period is 12 months. For standby applications the warranty period is 24 months/1000 hours. For emergency standby applications the warranty period is 24 months/400 hours. All terms begin after date of delivery to the first user.
- For all other applications the warranty period is 12 months after date of delivery to the first user.

Caterpillar Responsibilities

If a defect in material or workmanship is found during the warranty period, Caterpillar will, during normal working hours and at a place of business of a Cat dealer or other source approved by Caterpillar:

- Provide (at Caterpillar's choice) new, Remanufactured, or Caterpillar approved repaired parts or assembled components needed to correct the defect.

Note: New, remanufactured, or Caterpillar approved repaired parts or assembled components provided under the terms of this warranty are warranted for the remainder of the warranty period applicable to the product in which installed as if such parts were original components of that product. Items replaced under this warranty become the property of Caterpillar.

- Replace lubricating oil, filters, coolant, and other service items made unusable by the defect.
- Provide reasonable and customary labor needed to correct the defect, including labor to disconnect the product from and reconnect the product to its attached equipment, mounting, and support systems, if required.

For new 3114, 3116, and 3126 engines and, new and Caterpillar rebuild electric power generation products (which includes the following: any new products of other manufacturers packaged and sold by Caterpillar)

- Provide travel labor, up to four hours round trip, if in the opinion of Caterpillar, the product cannot reasonably be transported to a place of business of a Cat dealer or other source approved by Caterpillar (travel labor in excess of four hours round trip, and any meals, mileage, lodging, etc. is the user's responsibility).

For all other products:

- Provide reasonable travel expenses for authorized mechanics, including meals, mileage, and lodging, when Caterpillar chooses to make the repair on-site.

User Responsibilities

The user is responsible for:

- Providing proof of the delivery date to the first user.
- Labor costs, except as stated under "Caterpillar Responsibilities," including costs beyond those required to disconnect the product from and reconnect the product to its attached equipment, mounting, and support systems.
- Travel or transporting costs, except as stated under "Caterpillar Responsibilities."
- Premium or overtime labor costs.
- Parts shipping charges in excess of those that are usual and customary.
- Local taxes, if applicable.
- Costs to investigate complaints, unless the problem is caused by a defect in Caterpillar material or workmanship.
- Giving timely notice of a warrantable failure and promptly making the product available for repair.
- Performance of the required maintenance (including use of proper fuel, oil, lubricants, and coolant) and items replaced due to normal wear and tear.
- Allowing Caterpillar access to all electronically stored data.

Limitations

Caterpillar is not responsible for:

- Failures resulting from any use or installation that Caterpillar judges improper.
- Failures resulting from attachments, accessory items, and parts not sold or approved by Caterpillar.
- Failures resulting from abuse, neglect, and/or improper repair.
- Failures resulting from user's delay in making the product available after being notified of a potential product problem.
- Failures resulting from unauthorized repairs or adjustments, and unauthorized fuel setting changes.
- Damage to parts, fixtures, housings, attachments, and accessory items that are not part of the engine, Cat Selective Catalytic Reduction System or electric power generation product (including any products of other manufacturers packaged and sold by Caterpillar).
- Repair of components sold by Caterpillar that is warranted directly to the user by their respective manufacturer. Depending on type of application, certain exclusions may apply. Consult your Cat dealer for more information.

(Continued on reverse side…)

This warranty covers every major component of the products. Claims under this warranty should be submitted to a place of business of a Cat dealer or other source approved by Caterpillar. For further information concerning either the location to submit claims or Caterpillar as the issuer of this warranty, write Caterpillar Inc., 100 N.E. Adams St., Peoria, IL USA 61629, telephone 1 (309) 675-1000, or go to URL, www.cat.com, Find Your Dealer.

Caterpillar's obligations under this Limited Warranty are subject to, and shall not apply in contravention of, the laws, rules, regulations, directives, ordinances, orders, or statutes of the United States, or of any other applicable jurisdiction, without recourse or liability with respect to Caterpillar.

A) For products operating outside of Australia, Fiji, Nauru, New Caledonia, New Zealand, Papua New Guinea, the Solomon Islands, and Tahiti, the following is applicable:

NEITHER THE FOREGOING EXPRESS WARRANTY NOR ANY OTHER WARRANTY BY CATERPILLAR, EXPRESS OR IMPLIED, IS APPLICABLE TO ANY ITEM CATERPILLAR SELLS THAT IS WARRANTED DIRECTLY TO THE USER BY ITS MANUFACTURER.

THIS WARRANTY IS EXPRESSLY IN LIEU OF ANY OTHER WARRANTIES, EXPRESS OR IMPLIED, INCLUDING ANY WARRANTY OF MERCHANTABILITY OR FITNESS FOR A PARTICULAR PURPOSE, EXCEPT CATERPILLAR EMISSION-RELATED COMPONENT WARRANTIES FOR NEW ENGINES, WHERE APPLICABLE. REMEDIES UNDER THIS WARRANTY ARE LIMITED TO THE PROVISION OF MATERIAL AND SERVICES, AS SPECIFIED HEREIN.

CATERPILLAR IS NOT RESPONSIBLE FOR INCIDENTAL OR CONSEQUENTIAL DAMAGES.

CATERPILLAR EXCLUDES ALL LIABILITY FOR OR ARISING FROM ANY NEGLIGENCE ON ITS PART OR ON THE PART OF ANY OF ITS EMPLOYEES, AGENTS, OR REPRESENTATIVES IN RESPECT OF THE MANUFACTURE OR SUPPLY OF GOODS OR THE PROVISION OF SERVICES RELATING TO THE GOODS.

IF OTHERWISE APPLICABLE, THE VIENNA CONVENTION ON CONTRACTS FOR THE INTERNATIONAL SALE OF GOODS IS EXCLUDED IN ITS ENTIRETY.

For personal or family use engines or electric power generation products, operating in the USA, its territories and possessions, some states do not allow limitations on how long an implied warranty may last nor allow the exclusion or limitation of incidental or consequential damages. Therefore, the previously expressed exclusion may not apply to you. This warranty gives you specific legal rights and you may also have other rights, which vary by jurisdiction. To find the location of the nearest Cat dealer or other authorized repair facility, call (800) 447-4986. If you have questions concerning this warranty or its applications, call or write:

In USA and Canada: Caterpillar Inc, 100 N.E. Adams St., Peoria, IL USA 61629, Attention: Customer Service Manager, Telephone 1 (309) 675-1000. Outside the USA and Canada: Contact your Cat dealer, go to URL, www.cat.com, Find Your Dealer.

B) For products operating in Australia, Fiji, Nauru, New Caledonia, New Zealand, Papua New Guinea, the Solomon Islands, and Tahiti, the following is applicable:

THIS WARRANTY IS IN ADDITION TO WARRANTIES AND CONDITIONS IMPLIED BY STATUTE AND OTHER STATUTORY RIGHTS AND OBLIGATIONS THAT BY ANY APPLICABLE LAW CANNOT BE EXCLUDED, RESTRICTED, OR MODIFIED ("MANDATORY RIGHTS"). ALL OTHER WARRANTIES OR CONDITIONS, EXPRESS OR IMPLIED (BY STATUTE OR OTHERWISE), ARE EXCLUDED. WITHOUT LIMITING THE FOREGOING PROVISIONS OF THIS PARAGRAPH, WHERE A PRODUCT IS SUPPLIED FOR BUSINESS PURPOSES, THE CONSUMER GUARANTEES UNDER THE CONSUMER GUARANTEES ACT 1993 (NZ) WILL NOT APPLY.

NEITHER THIS WARRANTY NOR ANY OTHER CONDITION OR WARRANTY BY CATERPILLAR, EXPRESS OR IMPLIED (SUBJECT ONLY TO THE MANDATORY RIGHTS), IS APPLICABLE TO ANY ITEM CATERPILLAR SELLS THAT IS WARRANTED DIRECTLY TO THE USER BY ITS MANUFACTURER.

IF THE MANDATORY RIGHTS MAKE CATERPILLAR LIABLE IN CONNECTION WITH SERVICES OR GOODS, THEN TO THE EXTENT PERMITTED UNDER THE MANDATORY RIGHTS, THAT LIABILITY SHALL BE LIMITED AT CATERPILLAR'S OPTION TO (a) IN THE CASE OF SERVICES, THE SUPPLY OF THE SERVICES AGAIN OR THE PAYMENT OF THE COST OF HAVING THE SERVICES SUPPLIED AGAIN AND (b) IN THE CASE OF GOODS, THE REPAIR OR REPLACEMENT OF THE GOODS, THE SUPPLY OF EQUIVALENT GOODS, THE PAYMENT OF THE COST OF SUCH REPAIR OR REPLACEMENT OR THE ACQUISITION OF EQUIVALENT GOODS.

CATERPILLAR EXCLUDES ALL LIABILITY FOR OR ARISING FROM ANY NEGLIGENCE ON ITS PART OR ON THE PART OF ANY OF ITS EMPLOYEES, AGENTS OR REPRESENTATIVES IN RESPECT OF THE MANUFACTURE OR SUPPLY OF GOODS OR THE PROVISION OF SERVICES RELATING TO THE GOODS.

CATERPILLAR IS NOT LIABLE FOR INCIDENTAL OR CONSEQUENTIAL DAMAGES UNLESS IMPOSED UNDER MANDATORY RIGHTS.

IF OTHERWISE APPLICABLE, THE VIENNA CONVENTION ON CONTRACTS FOR THE INTERNATIONAL SALE OF GOODS IS EXCLUDED IN ITS ENTIRETY.

C) For products supplied in Australia:

IF THE PRODUCTS TO WHICH THIS WARRANTY APPLIES ARE:

I. PRODUCTS OF A KIND ORDINARILY ACQUIRED FOR PERSONAL, DOMESTIC OR HOUSEHOLD USE OR CONSUMPTION; OR

II. PRODUCTS THAT COST AUD 100,000 OR LESS,

WHERE THOSE PRODUCTS WERE NOT ACQUIRED FOR THE PURPOSE OF RE-SUPPLY OR FOR THE PURPOSE OF USING THEM UP OR TRANSFORMING THEM IN THE COURSE OF PRODUCTION OR MANUFACTURE OR IN THE COURSE OF REPAIRING OTHER GOODS OR FIXTURES, THEN THIS SECTION C APPLIES.

THE FOLLOWING MANDATORY TEXT IS INCLUDED PURSUANT TO THE AUSTRALIAN CONSUMER LAW AND INCLUDES REFERENCES TO RIGHTS THE USER MAY HAVE AGAINST THE DIRECT SUPPLIER OF THE PRODUCTS: OUR GOODS COME WITH GUARANTEES THAT CANNOT BE EXCLUDED UNDER THE AUSTRALIAN CONSUMER LAW. YOU ARE ENTITLED TO A REPLACEMENT OR REFUND FOR A MAJOR FAILURE AND COMPENSATION FOR ANY OTHER REASONABLY FORESEEABLE LOSS OR DAMAGE. YOU ARE ALSO ENTITLED TO HAVE THE GOODS REPAIRED OR REPLACED IF THE GOODS FAIL TO BE OF ACCEPTABLE QUALITY AND THE FAILURE DOES NOT AMOUNT TO A MAJOR FAILURE. THE INCLUSION OF THIS TEXT DOES NOT CONSTITUTE ANY REPRESENTATION OR ACCEPTANCE BY CATERPILLAR OF LIABILITY TO THE USER OR ANY OTHER PERSON IN ADDITION TO THAT WHICH CATERPILLAR MAY HAVE UNDER THE AUSTRALIAN CONSUMER LAW.

TO THE EXTENT THE PRODUCTS FALL WITHIN THIS SECTION C BUT ARE NOT OF A KIND ORDINARILY ACQUIRED FOR PERSONAL, DOMESTIC OR HOUSEHOLD USE OR CONSUMPTION, CATERPILLAR LIMITS ITS LIABILITY TO THE EXTENT IT IS PERMITTED TO DO SO UNDER THE AUSTRALIAN CONSUMER LAW TO, AT ITS OPTION, THE REPAIR OR REPLACEMENT OF THE PRODUCTS, THE SUPPLY OF EQUIVALENT PRODUCTS, OR THE PAYMENT OF THE COST OF SUCH REPAIR OR REPLACEMENT OR THE ACQUISITION OF EQUIVALENT PRODUCTS.

THE WARRANTY SET OUT IN THIS DOCUMENT IS GIVEN BY CATERPILLAR INC. OR ANY OF ITS SUBSIDIARIES, 100 N. E. ADAMS ST, PEORIA, IL USA 61629, TELEPHONE 1 309 675 1000,THE USER IS RESPONSIBLE FOR ALL COSTS ASSOCIATED WITH MAKING A CLAIM UNDER THE WARRANTY SET OUT IN THIS DOCUMENT, EXCEPT AS EXPRESSLY STATED OTHERWISE IN THIS DOCUMENT, AND THE USER IS REFERRED TO THE BALANCE OF THE DOCUMENT TERMS CONCERNING CLAIM PROCEDURES, CATERPILLAR RESPONSIBILITIES AND USER RESPONSIBILITIES.

TO THE EXTENT PERMISSIBLE BY LAW, THE TERMS SET OUT IN THE REMAINDER OF THIS WARRANTY DOCUMENT (INCLUDING SECTION B) CONTINUE TO APPLY TO PRODUCTS TO WHICH THIS SECTION C APPLIES.

© 2023 Caterpillar. All Rights Reserved.
CAT, CATERPILLAR, LET'S DO THE WORK,
their respective logos, "Caterpillar Corporate Yellow", the "Power Edge" and Cat "Modern Hex"
trade dress as well as corporate and product identity used herein, are trademarks of Caterpillar and may not be used without permission.

PARTS AND SERVICE STATEMENT

QUINN POWER SYSTEMS was organized on August 1, 2003 by the QUINN Company and is the only factory-authorized Caterpillar and Olympian Engine Distributor serving Los Angeles, Orange, and Inyo-Kern Counties in Southern California

QUINN POWER SYSTEMS is the successor to POWER SYSTEMS Associates, that was established in 1972 from the former Industrial Division of Shepherd Machinery Company. QUINN Company, serving Central California, was founded in 1919 and is the oldest Caterpillar dealer in California. We are Caterpillar's parts, service and sales representative.

QUINN POWER SYSTEMS offers genuine Caterpillar / Olympian parts and factory-trained mechanics. These are available on a 24-hour basis through our main office:

QUINN POWER SYSTEMS

PARTS AND SERVICE LOCATIONS

SELMA
Quinn Power Systems
10273 S. Golden State Blvd.
Selma, CA 93662-9410
P.O. Box 12625
Fresno, CA 93778-2625
(559) 891-6764

CORCORAN
Quinn Power Systems
510 Pickerell
Corcoran, CA 93212-1925
P.O. Box 578
Corcoran, CA 93212-0578
(559) 992-2193

CITY OF INDUSTRY
Quinn Power Systems
3500 Shepherd Street
City of Industry
562-463-6049

BAKERSFIELD
Quinn Power Systems
2200 Pegasus Dr.
Bakersfield, CA 93308-6801
Ph: (661)- 393-5800

OXNARD
Quinn Power Systems
801 Del Norte Blvd.
Oxnard, CA 93030-2692
P.O. Box 5227
Oxnard, CA 93031-5227
(805) 485-2171

RIVERSIDE
Quinn Power Systems
656 E La Cadena Drive
Riverside, CA 92507
(951) 683-5960

SALINAS
Quinn Power Systems
1300 Abbott Street
Salinas, CA 93901-4507
P.O. Box 1908
Salinas, CA 93902-1908
(831) 758-8461

SANTA MARIA
Quinn Power Systems
1655 N. Carlotti Drive
Santa Maria, CA 93454-1503
(805) 925-8611

PACKAGE WEIGHTS (ESTIMATES):

GENERATOR SET PACKAGE "DRY" WEIGHT	18,000 LBS.
629 GALLONS (USABLE) DIESEL FUEL	4,800 LBS.
TOTAL PACKAGE "WET" WEIGHT	22,800 LBS.

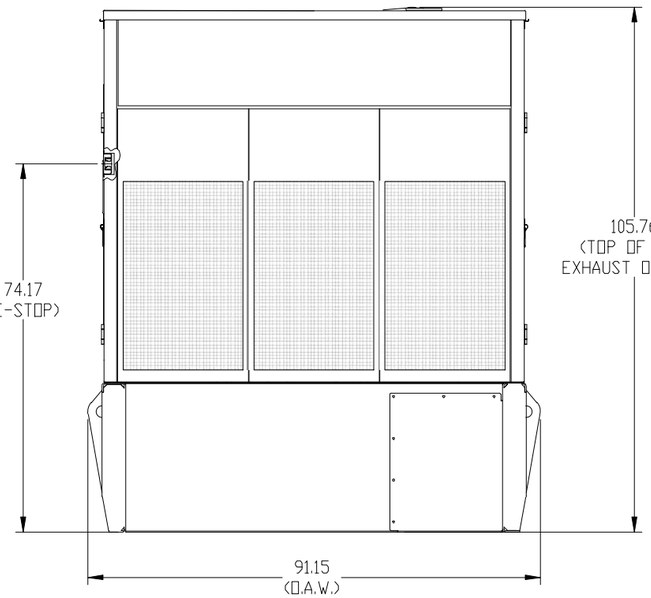

REAR VIEW

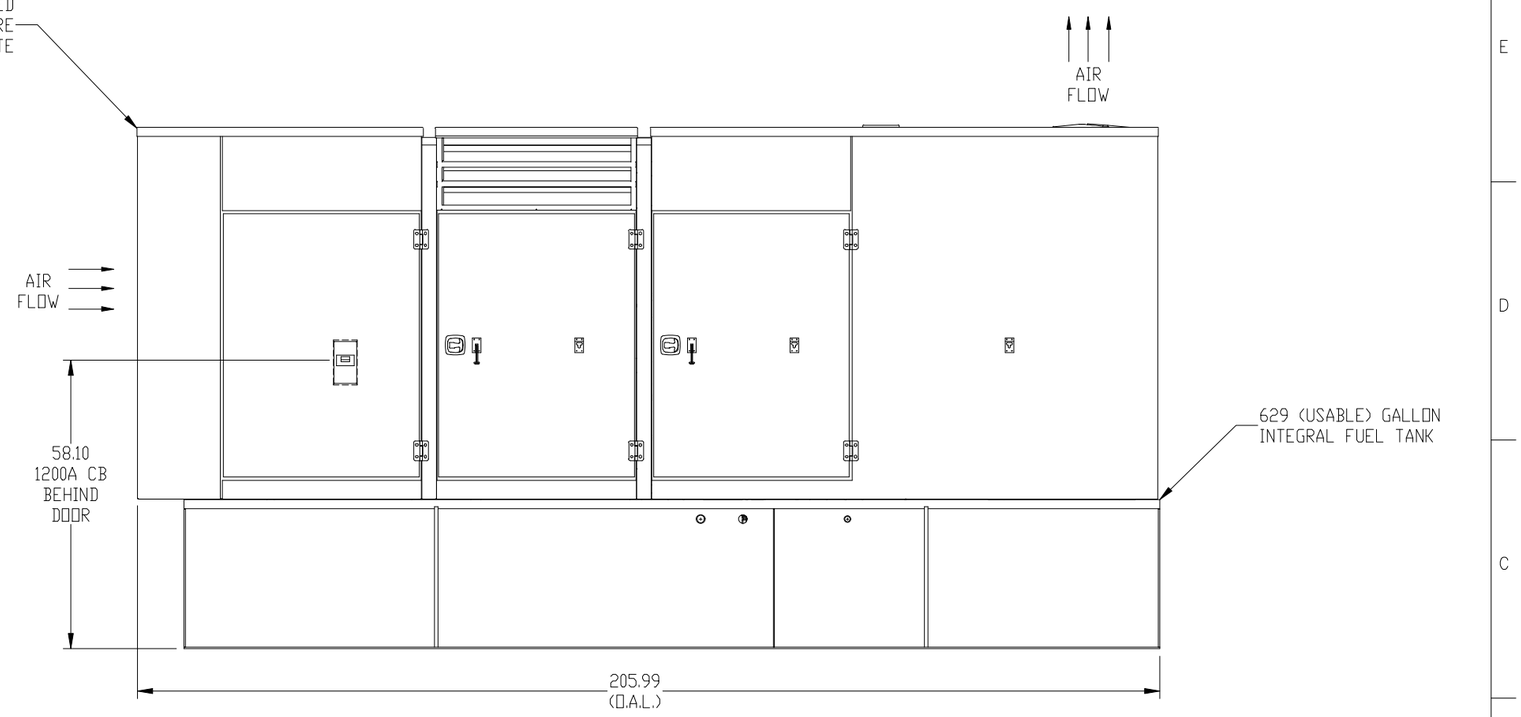

RIGHT SIDE VIEW

ITEM NO.	PART NO. OR SIZE	DRAWING NO.	NO. REQ'D	MATERIAL DESCRIPTION	REMARKS
3	LS-3506	582-8271	1	660 GALLON INTEGRAL TANK	CATERPILLAR
2	LS-4708	582-8271	1	LEVEL 1 SOUND ATTENUATED ENCLOSURE (WHITE)	CATERPILLAR
1	LS-3489	582-8271	1	C18 650KW, 277/480V 60HZ, 1800 RPM GENSET	CATERPILLAR

DRAWN D. URIARTE | DATE 11/14/2024

UNLESS NOTED OTHERWISE DIMENSIONS ARE IN INCHES

QUINN POWER SYSTEMS | CAT

656 E. LA CADENA DR
RIVERSIDE, CA 92507

TITLE
C18 650KW 277/480V 3-PHASE
GENERATOR SET

JOB: 240171
CITY OF REDLANDS - AGATE AVE PS
STOCK NO. RE16828
SHEET 1 OF 3

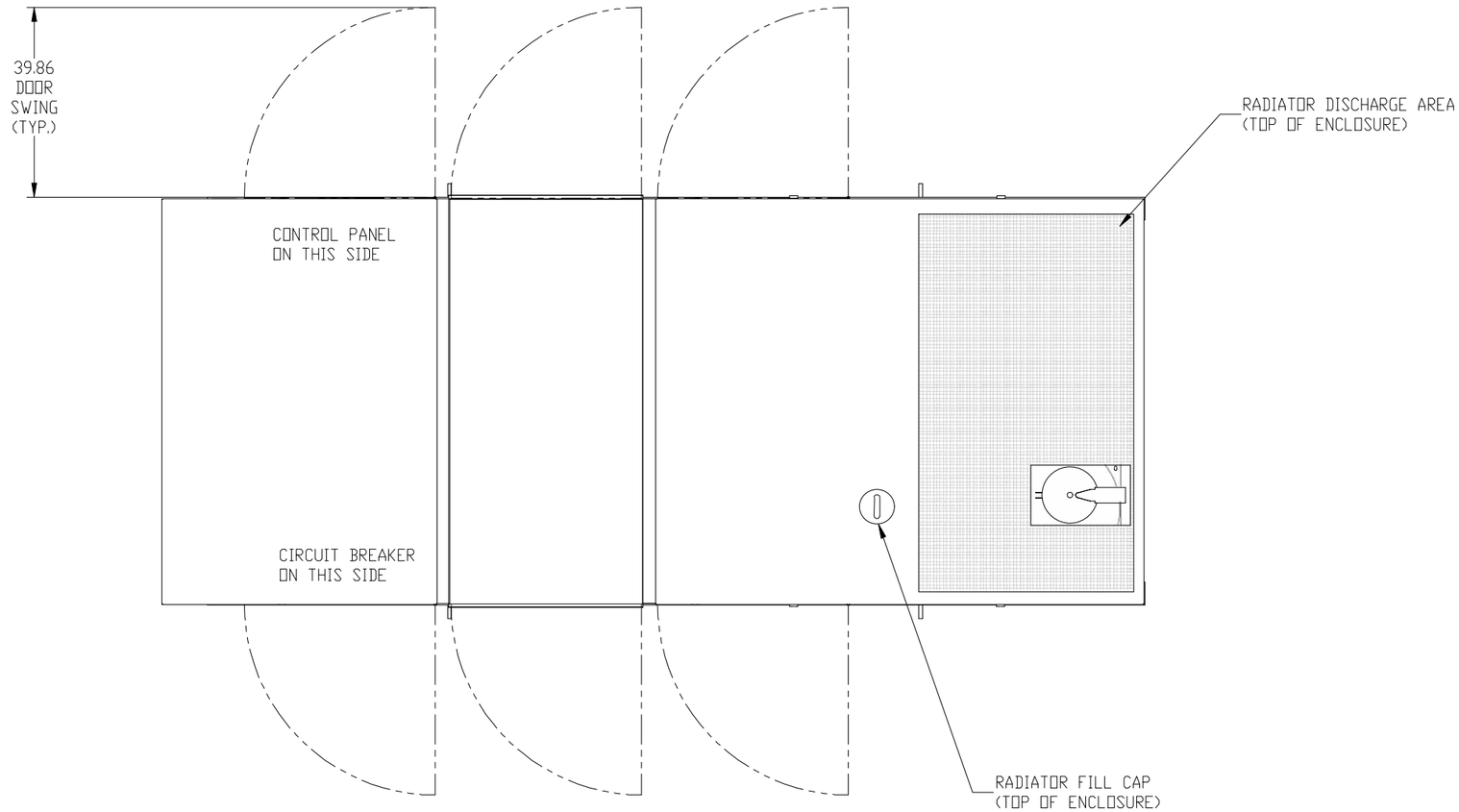

TOP VIEW

ITEM NO.	PART NO. OR SIZE	DRAWING NO.	NO. REQ'D	MATERIAL DESCRIPTION	REMARKS
3	LS-3506	582-8271	1	660 GALLON INTEGRAL TANK	CATERPILLAR
2	LS-4708	582-8271	1	LEVEL 1 SOUND ATTENUATED ENCLOSURE (WHITE)	CATERPILLAR
1	LS-3489	582-8271	1	C18 650KW, 277/480V 60HZ, 1800 RPM GENSET	CATERPILLAR

DRAWN D. URIARTE | DATE 11/14/2024

UNLESS NOTED OTHERWISE DIMENSIONS ARE IN INCHES

QUINN POWER SYSTEMS

656 E. LA CADENA DR
RIVERSIDE, CA 92507

TITLE
C18 650KW 277/480V 3-PHASE GENERATOR SET

JOB: 240171
CITY OF REDLANDS - AGATE AVE PS

STOCK NO. RE16828

SHEET 2 OF 3

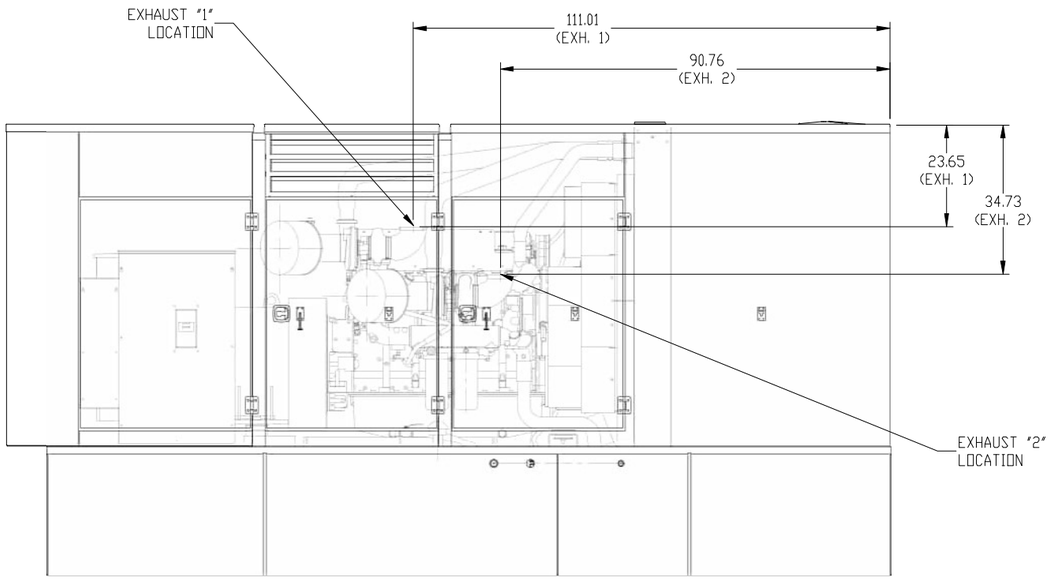

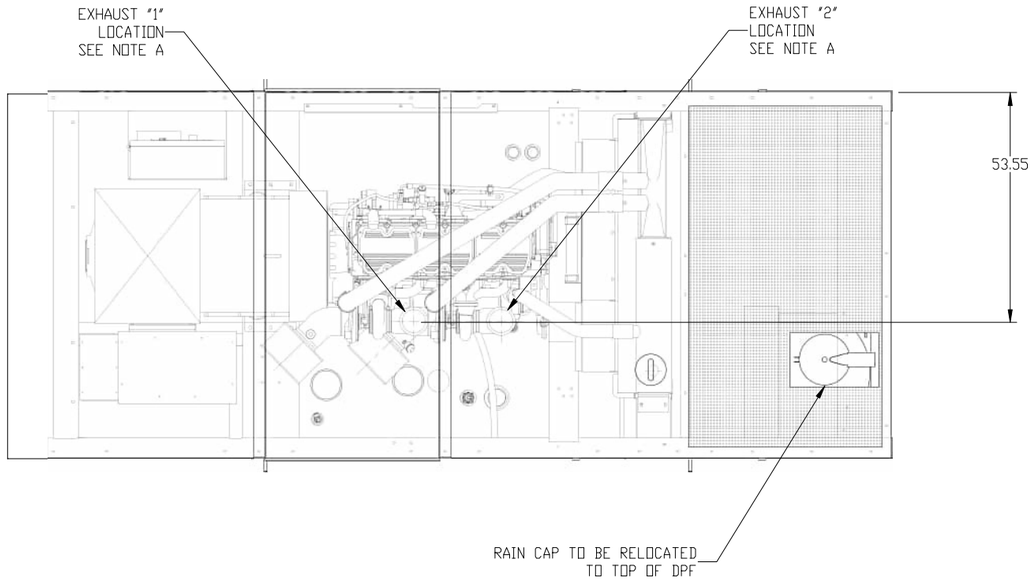

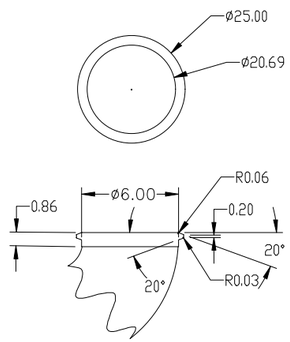

DETAIL A
EXHAUST FLANGE
CONNECTION

ITEM NO.	PART NO. OR SIZE	DRAWING NO.	NO. REQ'D	MATERIAL DESCRIPTION	REMARKS
3	LS-3506	582-8271	1	660 GALLON INTEGRAL TANK	CATERPILLAR
2	LS-4708	582-8271	1	LEVEL 1 SOUND ATTENUATED ENCLOSURE (WHITE)	CATERPILLAR
1	LS-3489	582-8271	1	C18 650KW, 277/480V 60HZ, 1800 RPM GENSET	CATERPILLAR

DRAWN D. URIARTE | DATE 08/08/2025

UNLESS NOTED OTHERWISE DIMENSIONS ARE IN INCHES

QUINN POWER SYSTEMS

656 E. LA CADENA DR
RIVERSIDE, CA 92507

TITLE
C18 650KW 277/480V 3-PHASE
GENERATOR SET

JOB: 240171
CITY OF REDLANDS - AGATE AVE PS

STOCK NO. RE16828

SHEET 4 OF 4

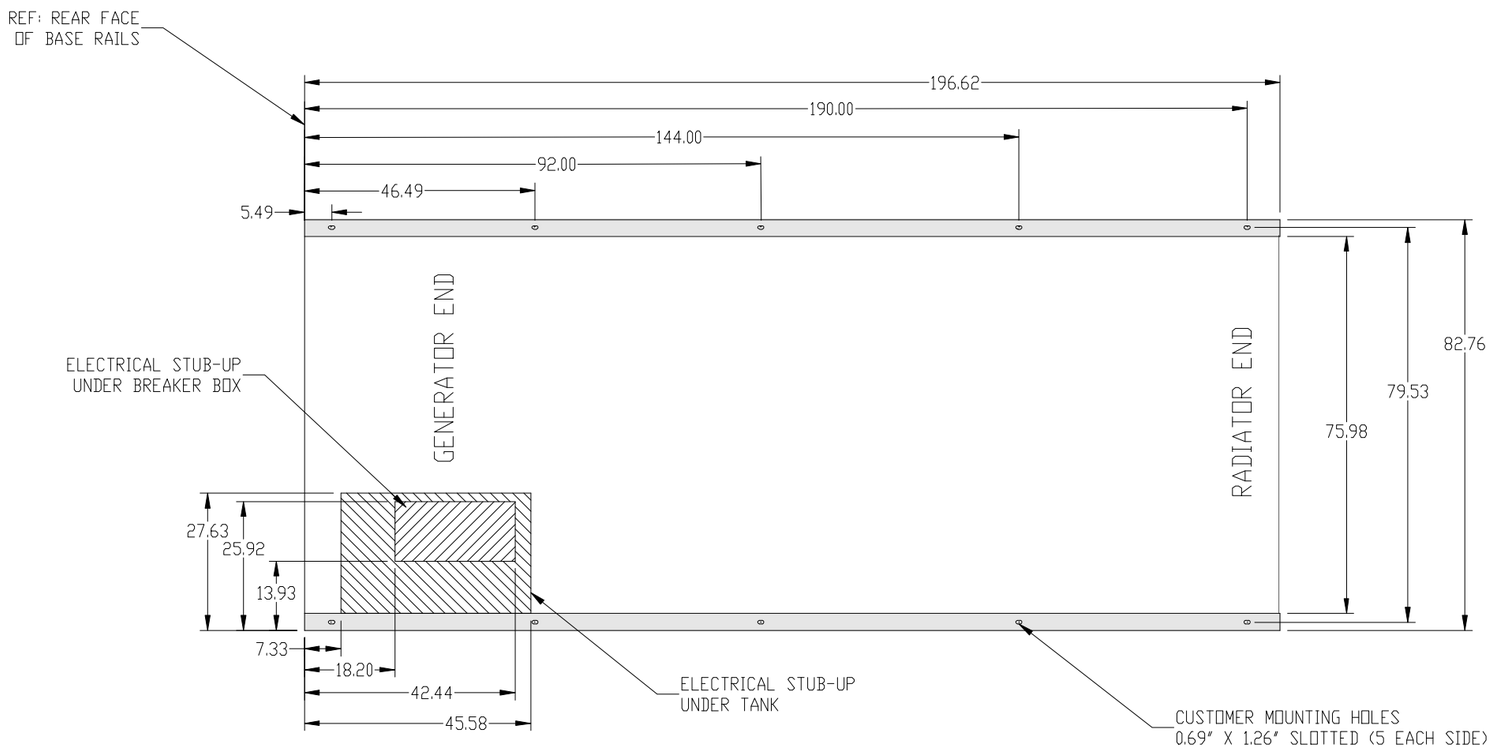

FOOTPRINT – STUB UP AND MOUNTING HOLES (TOP VIEW)

ITEM NO.	PART NO. OR SIZE	DRAWING NO.	NO. REQ'D	MATERIAL DESCRIPTION	REMARKS
3	LS-3506	582-8271	1	660 GALLON INTEGRAL TANK	CATERPILLAR
2	LS-4708	582-8271	1	LEVEL 1 SOUND ATTENUATED ENCLOSURE (WHITE)	CATERPILLAR
1	LS-3489	582-8271	1	C18 650KW, 277/480V 60HZ, 1800 RPM GENSET	CATERPILLAR

DRAWN D. URIARTE | DATE 11/14/2024

UNLESS NOTED OTHERWISE DIMENSIONS ARE IN INCHES

QUINN POWER SYSTEMS

656 E. LA CADENA DR
RIVERSIDE, CA 92507

TITLE
C18 650KW 277/480V 3-PHASE GENERATOR SET

JOB: 240171
CITY OF REDLANDS – AGATE AVE PS
STOCK NO. RE16828
SHEET 3 OF 3

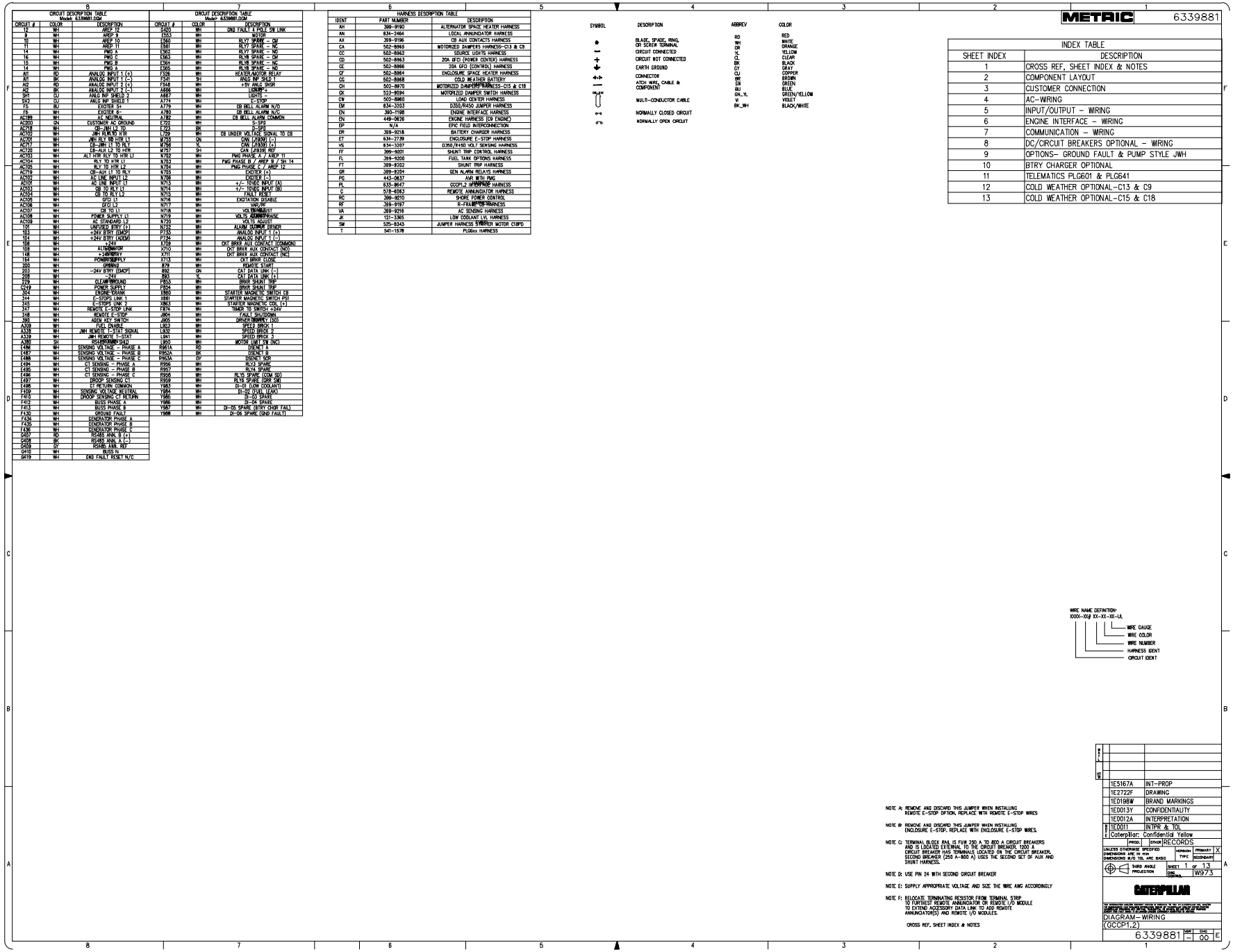

METRIC 6339881

CIRCUIT DESCRIPTION TABLE
Model: 6339881.DGM

CIRCUIT #	COLOR	DESCRIPTION
12	WH	AREP 12
9	WH	AREP 9
10	WH	AREP 10
11	WH	AREP 11
14	WH	PMG A
16	WH	PMG C
15	WH	PMG B
14	WH	PMG A
A1	RD	ANALOG INPUT 1 (+)
A1	BK	ANALOG INPUT 1 (-)
A2	RD	ANALOG INPUT 2 (+)
A2	BK	ANALOG INPUT 2 (-)
SH1	CU	ANLG INP SHIELD 2
SH2	CU	ANLG INP SHIELD 1
F5	BU	EXCITER S+
F6	WH	EXCITER 6-
AC199	WH	AC NEUTRAL
AC200	GN	CUSTOMER AC GROUND
AC715	WH	CB--JWH L2 TO
AC707	WH	JWH RLY TO HTR
AC701	WH	JWH RLY TO HTR L1
AC717	WH	CB--JWH L1 TO RLY
AC720	WH	CB--AUI L2 TO HTR
AC703	WH	ALT HTR RLY TO HTR L1
AC704	WH	RLY TO HTR L1
AC705	WH	RLY TO HTR L2
AC719	WH	CB--AUI L1 TO RLY
AC702	WH	AC LINE INPUT L2
AC101	WH	AC LINE INPUT L1
AC103	WH	CB TO RLY L1
AC104	WH	CB TO RLY L2
AC106	WH	GFCI L1
AC107	WH	GFCI L2
AC108	WH	CB TO L1
AC109	WH	POWER SUPPLY L1
101	WH	AC STANDARD L2
102	WH	UNFUSED BTRY (+)
103	WH	+24V BTRY (EMCP)
104	WH	+24V BTRY (ADEM)
106	WH	+24V
108	WH	ALTERNATOR
148	WH	+24V BATTERY
154	WH	POWER SUPPLY
200	WH	GROUND
203	WH	-24V BTRY (EMCP)
208	WH	-24V
229	WH	CLEAR GROUND
C149	WH	POWER SUPPLY 1
304	WH	ENGINE CRANK
314	WH	E-STOPS LINK 1
345	WH	E-STOPS LINK 2
347	WH	REMOTE E-STOP LINK
348	WH	REMOTE E-STOP
380	WH	ADEM KEY SWITCH
A308	WH	FUEL ENABLE
A338	WH	JWH REMOTE T-STAT SIGNAL
A339	WH	JWH REMOTE T-STAT
A380	SH	DISCRIMINATOR
F486	WH	SENSING VOLTAGE - PHASE A
F487	WH	SENSING VOLTAGE - PHASE B
F488	WH	SENSING VOLTAGE - PHASE C
F494	WH	CT SENSING - PHASE A
F495	WH	CT SENSING - PHASE B
F496	WH	CT SENSING - PHASE C
F497	WH	DROOP SENSING CT
F498	WH	CT RETURN COMMON
F409	WH	SENSING VOLTAGE NEUTRAL
F410	WH	DROOP SENSING CT RETURN
F412	WH	BUSS PHASE A
F413	WH	BUSS PHASE B
F430	WH	GROUND FAULT
F434	WH	GENERATOR PHASE A
F435	WH	GENERATOR PHASE B
F436	WH	GENERATOR PHASE C
D407	RD	RS485 ANN. B (+)
D408	BK	RS485 ANN. A (-)
D409	GY	RS485 ANN. REF
D410	WH	BUSS N
D419	WH	GND FAULT RESET N/C

CIRCUIT DESCRIPTION TABLE
Model: 6339881.DGM

CIRCUIT #	COLOR	DESCRIPTION
D420	WH	GND FAULT 5 POLE SW LINK
F563	WH	MOTOR
E560	WH	RLY1 SPARE - CM
E561	WH	RLY1 SPARE - NC
E562	WH	RLY1 SPARE - NO
E563	WH	RLY8 SPARE - CM
E564	WH	RLY8 SPARE - NC
E565	WH	RLY8 SPARE - NO
F526	WH	HEATER/MOTOR RELAY
F547	SH	ANLG INP SHLD 3
F548	WH	+5V ANLG SNSR
A666	WH	LIGHT+
A667	WH	LIGHT-
A774	WH	E-STOP
A779	WH	CB BELL ALARM N/O
A780	WH	CB BELL ALARM N/C
A782	WH	CB BELL ALARM COMMON
C722	WH	S-SPD
C723	BK	P-SPD
J759	WH	CB UNDER VOLTAGE SIGNAL TO CB
M705	GN	CAN (J1939) (-)
M756	YL	CAN (J1939) (+)
M757	SH	CAN (J1939) REF
M702	WH	PMG PHASE A / AREP 11
M703	WH	PMG PHASE B / AREP 9 / SH 14
M704	WH	PMG PHASE C / AREP 12
M705	WH	EXCITER (+)
M706	WH	EXCITER (-)
N713	WH	+/- 10VDC INPUT (A)
N714	WH	+/- 10VDC INPUT (B)
N715	WH	FAULT RESET
N716	WH	EXCITATION DISABLE
N717	WH	VAR/PF
N718	WH	VOLTAGE TRIM/DROOP
N719	WH	VOLTS ADJUST/RAISE
N720	WH	VOLTS ADJUST
N722	WH	ALARM SIGNAL DRIVER
P755	WH	ANALOG INPUT 1 (+)
P756	WH	ANALOG INPUT 1 (-)
X709	WH	CKT BRKR AUX CONTACT (COMMON)
X710	WH	CKT BRKR AUX CONTACT (NO)
X711	WH	CKT BRKR AUX CONTACT (NC)
X713	WH	CKT BRKR CLOSE
879	WH	REMOTE START
892	GN	CAT DATA LINK (-)
893	Y	CAT DATA LINK (+)
P853	WH	BRKR SHUNT TRIP
P854	WH	BRKR SHUNT TRIP
E800	WH	STARTER MAGNETIC SWITCH CB
X881	WH	STARTER MAGNETIC SWITCH PSI
X863	WH	STARTER MAGNETIC COIL (+)
F874	WH	TIMER TO SWITCH +24V
J904	WH	FAIL SHUTDOWN
J905	WH	DRIVER BRKR REV (50)
L903	WH	SPEED BRICK 1
L932	WH	SPEED BRICK 2
L941	WH	SPEED BRICK 3
L950	WH	MOTOR LIGHT ON (NC)
R951A	RD	DSENET A
R952A	BK	DSENET B
R953A	GY	DSENET SCR
R956	WH	RLY3 SPARE
R957	WH	RLY4 SPARE
R958	WH	RLY5 SPARE (COM 52)
R959	WH	RLY6 SPARE (GRR SM)
Y953	WH	DI--01 (LOW COOLANT)
Y954	WH	DI--02 (FUEL LEAK)
Y955	WH	DI--03 SPARE
Y956	WH	DI--04 SPARE
Y957	WH	DI--05 SPARE (BTRY CHGR FAIL)
Y958	WH	DI--06 SPARE (GND FAULT)

HARNESS DESCRIPTION TABLE

IDENT	PART NUMBER	DESCRIPTION
AH	399-9190	ALTERNATOR SPACE HEATER HARNESS
AN	834-2464	LOCAL ANNUNCIATOR HARNESS
AX	399-9196	CB AUX CONTACTS HARNESS
CA	502-8965	MOTORIZED DAMPERS HARNESS--C13 & C9
CC	502-8963	SOURCE LIGHTS HARNESS
CD	502-8963	20A GFCI (POWER CENTER) HARNESS
CE	502-8966	20A GFCI (CONTROL) HARNESS
CF	502-8964	ENCLOSURE SPACE HEATER HARNESS
CG	502-8968	COLD WEATHER BATTERY
CH	502-8970	MOTORIZED DAMPERS HARNESS--C15 & C18
CK	502-8094	MOTORIZED DAMPER SWITCH HARNESS
CW	502-8981	LOAD CENTER HARNESS
EM	834-3093	D350/R450 JUMPER HARNESS
EN	390-7198	ENGINE INTERFACE HARNESS
EN	449-0636	ENGINE HARNESS (C9 ENGINE)
EP	N/A	EPIC FIELD INTERCONNECTION
ER	399-9218	BATTERY CHARGER HARNESS
ET	634-2739	ENCLOSURE E-STOP HARNESS
VS	834-3207	D350/R450 VOLT SENSING HARNESS
FT	399-9201	SHUNT TRIP CONTROL HARNESS
FL	399-9200	FUEL TANK OPTIONS HARNESS
FT	389-9202	SHUNT TRIP HARNESS
GR	389-9204	GEN ALARM RELAYS HARNESS
PX	443-0637	AVR WITH PMG
PL	833-9647	GCCP1,2 INTERFACE HARNESS
C	578-6063	REMOTE ANNUNCIATOR HARNESS
RC	390-9210	SHORE POWER CONTROL
RF	389-9197	R-FRAME HARNESS
VA	389-9216	AC SENSING HARNESS
JK	121-1365	LOW COOLANT LVL HARNESS
SM	525-8343	JUMPER HARNESS STARTER MOTOR C18PD
T	541-1578	PL66xx HARNESS

SYMBOL	DESCRIPTION	ABBREV	COLOR
●	BLADE, SPADE, RING, OR SCREW TERMINAL	RD	RED
		WH	WHITE
		OR	ORANGE
	CIRCUIT CONNECTED	YL	YELLOW
	CIRCUIT NOT CONNECTED	CL	CLEAR
		BK	BLACK
	EARTH GROUND	GY	GRAY
		CU	COPPER
	CONNECTOR	BR	BROWN
	AT/ON WIRE, CABLE & COMPONENT	GN	GREEN
		BU	BLUE
		GN_YL	GREEN/YELLOW
	MULTI-CONDUCTOR CABLE	VI	VIOLET
		BK_WH	BLACK/WHITE
	NORMALLY CLOSED CIRCUIT		
	NORMALLY OPEN CIRCUIT		

INDEX TABLE

SHEET INDEX	DESCRIPTION
1	CROSS REF, SHEET INDEX & NOTES
2	COMPONENT LAYOUT
3	CUSTOMER CONNECTION
4	AC-WIRING
5	INPUT/OUTPUT - WIRING
6	ENGINE INTERFACE - WIRING
7	COMMUNICATION - WIRING
8	DC/CIRCUIT BREAKERS OPTIONAL - WIRING
9	OPTIONS- GROUND FAULT & PUMP STYLE JWH
10	BTRY CHARGER OPTIONAL
11	TELEMATICS PLG601 & PLG641
12	COLD WEATHER OPTIONAL-C13 & C9
13	COLD WEATHER OPTIONAL-C15 & C18

WIRE NAME DEFINITION:
XXXX-XX# XX-XX-XX-UL
- WIRE GAUGE
- WIRE COLOR
- WIRE NUMBER
- HARNESS IDENT
- CIRCUIT IDENT

NOTE A: REMOVE AND DISCARD THIS JUMPER WHEN INSTALLING REMOTE E-STOP OPTION, REPLACE WITH REMOTE E-STOP WIRES

NOTE B: REMOVE AND DISCARD THIS JUMPER WHEN INSTALLING ENCLOSURE E-STOP, REPLACE WITH ENCLOSURE E-STOP WIRES.

NOTE C: TERMINAL BLOCK TB1 IS FOR 250 A TO 800 A CIRCUIT BREAKERS AND IS LOCATED EXTERNAL TO THE CIRCUIT BREAKER. 1200 A CIRCUIT BREAKER HAS TERMINALS LOCATED ON THE CIRCUIT BREAKER. SECOND BREAKER (250 A-800 A) USES THE SECOND SET OF AUX AND SHUNT HARNESS.

NOTE D: USE PIN 24 WITH SECOND CIRCUIT BREAKER

NOTE E: SUPPLY APPROPRIATE VOLTAGE AND SIZE THE WIRE AWG ACCORDINGLY

NOTE F: RELOCATE TERMINATING RESISTOR FROM TERMINAL STRIP TO FURTHEST REMOTE ANNUNCIATOR OR REMOTE I/O MODULE TO EXTEND ACCESSORY DATA LINK TO ADD REMOTE ANNUNCIATOR(S) AND REMOTE I/O MODULES.

CROSS REF, SHEET INDEX & NOTES

REV		
	1E5167A	INT-PROP
	1E2722F	DRAWING
	1ED198W	BRAND MARKINGS
	1ED013Y	CONFIDENTIALITY
	1ED012A	INTERPRETATION
B	1E0011	INTPR & TOL
C	Caterpillar: Confidential Yellow	

PROD. RECORDS | OTHER

UNLESS OTHERWISE SPECIFIED DIMENSIONS ARE IN mm DIMENSIONS A/D TOL ARE BASIC | VENDOR TYPE: PRIMARY X SECONDARY

THIRD ANGLE PROJECTION | SHEET 1 OF 13 | SIZE: D | DWG NO. W973

CATERPILLAR

DIAGRAM-WIRING
(GCCP1,2)
6339881 | REV - | DWG 00 | E

METRIC 6339881

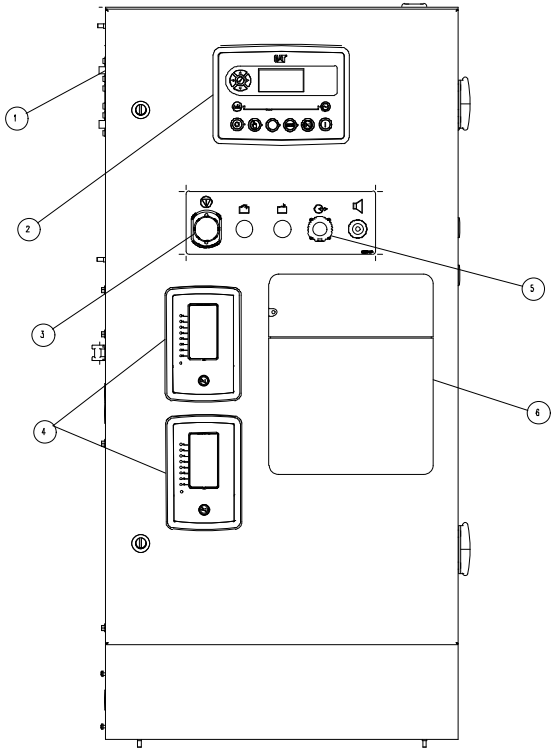

CONTROL PANEL
FRONT VIEW

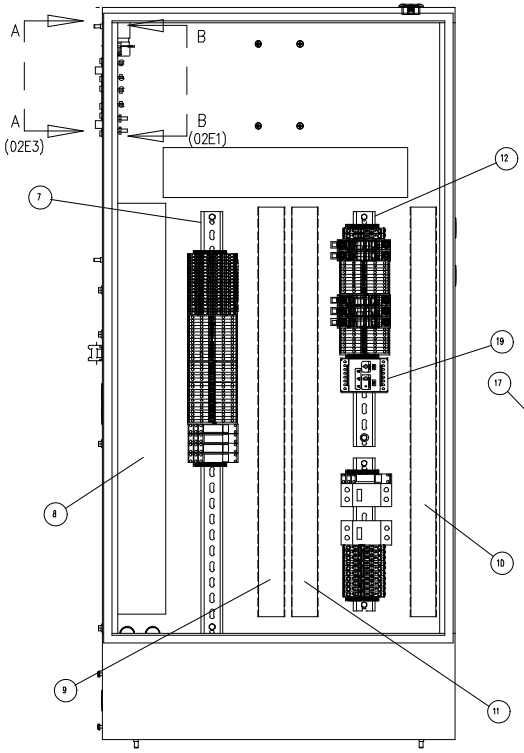

CONTROL PANEL
INSIDE VIEW

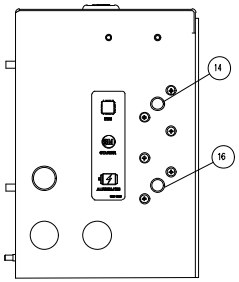

VIEW A–A
(DC–POWER DISTRIBUTION)
(CIRCUIT BREAKERS)
(02E5)

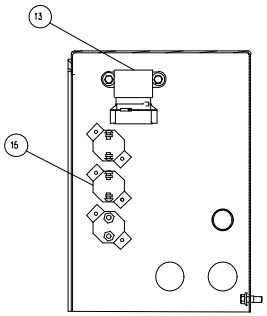

VIEW B–B
(DC–POWER DISTRIBUTION)
(CIRCUIT BREAKERS)
(02E5)

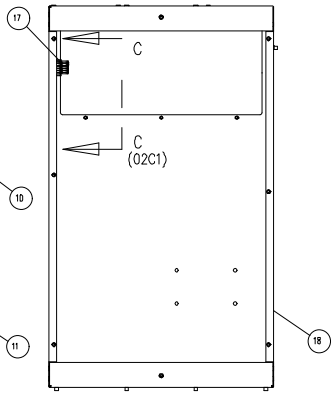

BREAKER BOX

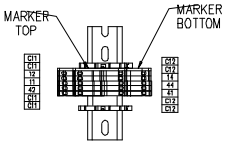

SECTION C–C
(SHUNT TRIP CB & AUX CONTACTS)
(374–5756 & 615–7965)
(02C3)

1 GCCP 1.2 CONTROL PANEL
2 GCCP 1.2 CONTROLLER
3 ESTOP PUSH BUTTON
4 DSE2548 ANNUNCIATOR (OPTIONAL)
5 SERVICE TOOL CONNECTOR
6 DOCUMENT HOLDER
7 LOW ENERGY TERMINAL STRIP (DI,DO,RO,AI)
8 LOW ENERGY–DC CONTROL PANEL WIRING DUCT
9 LOW ENERGY–DC CUSTOMER WIRING DUCT
10 HIGH ENERGY AC/DC CONTROL PANEL WIRING DUCT
11 HIGH ENERGY AC/DC CUSTOMER CONNECTION DUCT
12 HIGH ENERGY TERMINAL AC/DC STRIP
13 SMMS RELAY
14 CIRCUIT BREAKER–ECM
15 CIRCUIT BREAKER–STARTER
16 CIRCUIT BREAKER–ALTERNATOR
17 BREAKER TERMINAL STRIP (OPTIONAL BREAKER)
18 BREAKER BOX
19 OPTIONAL GROUND FAULT RELAY

FOR NOTES SEE SHEET 1
COMPONENT LAYOUT

	1E5167A	INT–PROP
	1E2722F	DRAWING
	1ED198W	BRAND MARKINGS
	1ED013Y	CONFIDENTIALITY
	1ED012A	INTERPRETATION
REV	1E0011	INTPR & TOL
C	Caterpillar: Confidential Yellow	

PROD. | OTHR RECORDS

UNLESS OTHERWISE SPECIFIED DIMENSIONS ARE IN mm DIMENSIONS A/D TOL ARC BASIC
VERSION TYPE PRIMARY X SECONDARY
THIRD ANGLE PROJECTION
SHEET 2 OF 13
ENG CONTROL W973

CATERPILLAR

DIAGRAM–WIRING
(GCCP1,2)
6339881 DASH – SHG 00 E

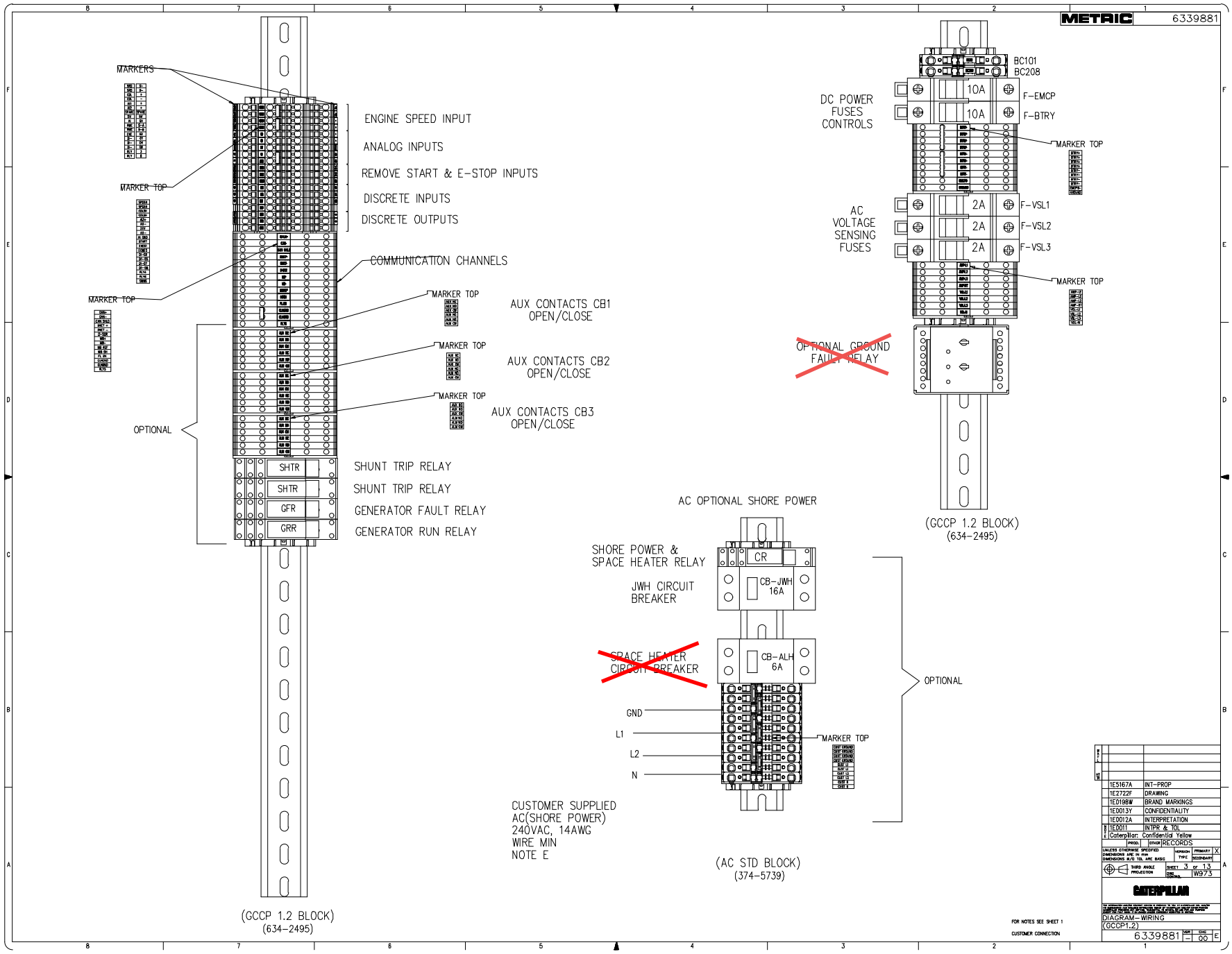
METRIC
6339881
MARKERS
MARKER TOP
MARKER TOP
ENGINE SPEED INPUT
ANALOG INPUTS
REMOVE START & E-STOP INPUTS
DISCRETE INPUTS
DISCRETE OUTPUTS
COMMUNICATION CHANNELS
MARKER TOP
AUX CONTACTS CB1 OPEN/CLOSE
MARKER TOP
AUX CONTACTS CB2 OPEN/CLOSE
MARKER TOP
AUX CONTACTS CB3 OPEN/CLOSE
OPTIONAL
SHTR
SHTR
GFR
GRR
SHUNT TRIP RELAY
SHUNT TRIP RELAY
GENERATOR FAULT RELAY
GENERATOR RUN RELAY
(GCCP 1.2 BLOCK)
(634-2495)
BC101
BC208
DC POWER FUSES CONTROLS
10A
F-EMCP
10A
F-BTRY
MARKER TOP
AC VOLTAGE SENSING FUSES
2A
F-VSL1
2A
F-VSL2
2A
F-VSL3
MARKER TOP
OPTIONAL GROUND FAULT RELAY
(GCCP 1.2 BLOCK)
(634-2495)
AC OPTIONAL SHORE POWER
SHORE POWER & SPACE HEATER RELAY
CR
JWH CIRCUIT BREAKER
CB-JWH 16A
SPACE HEATER CIRCUIT BREAKER
CB-ALH 6A
OPTIONAL
GND
L1
L2
N
MARKER TOP
CUSTOMER SUPPLIED AC(SHORE POWER) 240VAC, 14AWG WIRE MIN NOTE E
(AC STD BLOCK)
(374-5739)
FOR NOTES SEE SHEET 1
CUSTOMER CONNECTION
1E5167A INT-PROP
1E2722F DRAWING
1ED198W BRAND MARKINGS
1ED013Y CONFIDENTIALITY
1ED012A INTERPRETATION
1E0011 INTPR & TOL
Caterpillar: Confidential Yellow
RECORDS
PRIMARY
SECONDARY
SHEET 3 OF 13
W973
CATERPILLAR
DIAGRAM-WIRING
(GCCP1.2)
6339881
00

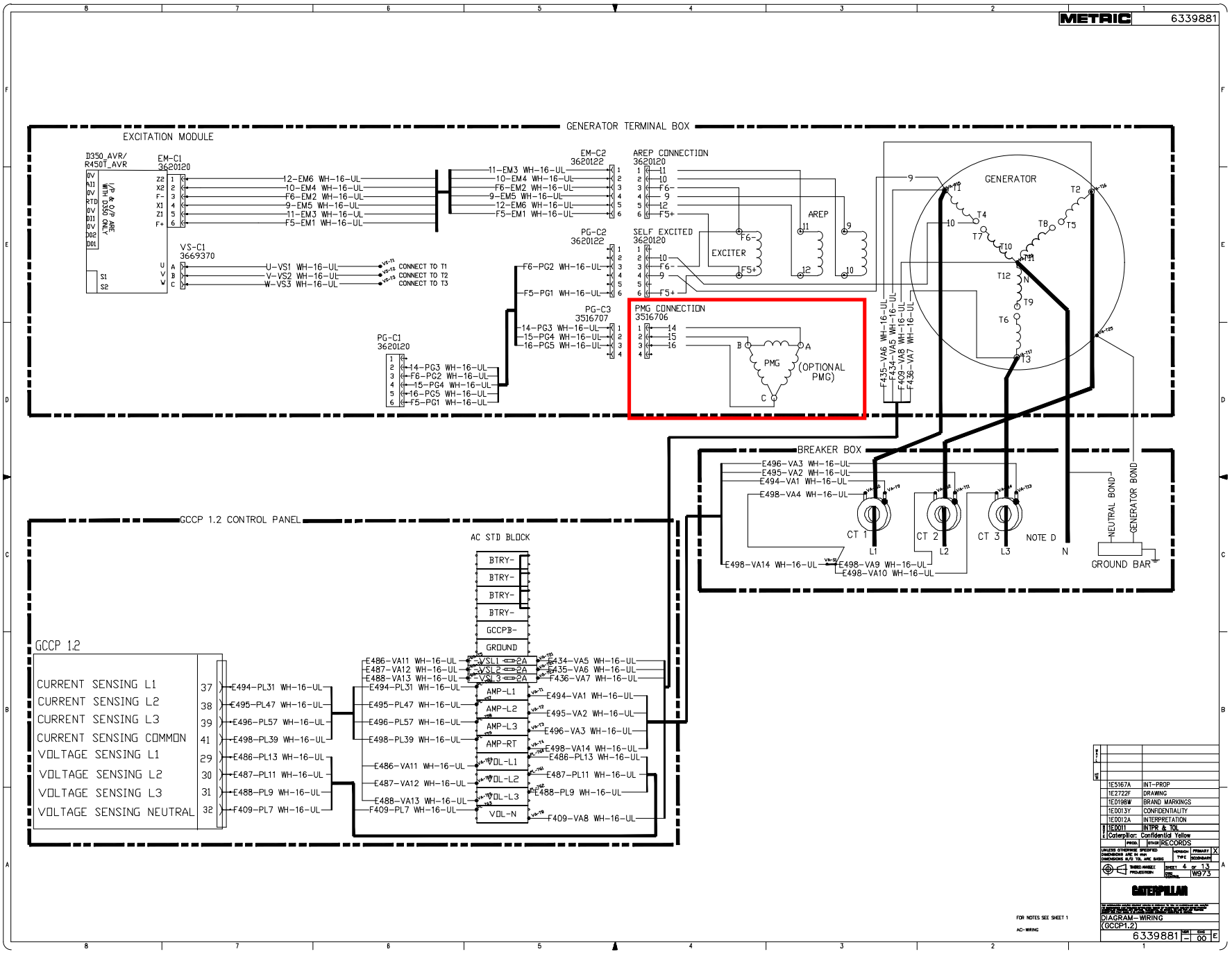
METRIC
6339881
GENERATOR TERMINAL BOX
EXCITATION MODULE
D350_AVR/
R450T_AVR
EM-C1
3620120
VS-C1
3669370
EM-C2
3620122
PG-C2
3620122
PG-C3
3516707
PG-C1
3620120
AREP CONNECTION
3620120
SELF EXCITED
3620120
PMG CONNECTION
3516706
EXCITER
AREP
PMG
(OPTIONAL
PMG)
GENERATOR
BREAKER BOX
CT 1
CT 2
CT 3
NOTE D
NEUTRAL BOND
GENERATOR BOND
GROUND BAR
GCCP 1.2 CONTROL PANEL
AC STD BLOCK
GCCP 1.2
CURRENT SENSING L1
CURRENT SENSING L2
CURRENT SENSING L3
CURRENT SENSING COMMON
VOLTAGE SENSING L1
VOLTAGE SENSING L2
VOLTAGE SENSING L3
VOLTAGE SENSING NEUTRAL
BTRY-
GCCPB-
GROUND
AMP-L1
AMP-L2
AMP-L3
AMP-RT
VOL-L1
VOL-L2
VOL-L3
VOL-N
1E5167A INT-PROP
1E2722F DRAWING
1E0198W BRAND MARKINGS
1E0013Y CONFIDENTIALITY
1E0012A INTERPRETATION
1E0011 INTPR & TOL
Caterpillar: Confidential Yellow
RECORDS
CATERPILLAR
DIAGRAM-WIRING
(GCCP1.2)
6339881
W973

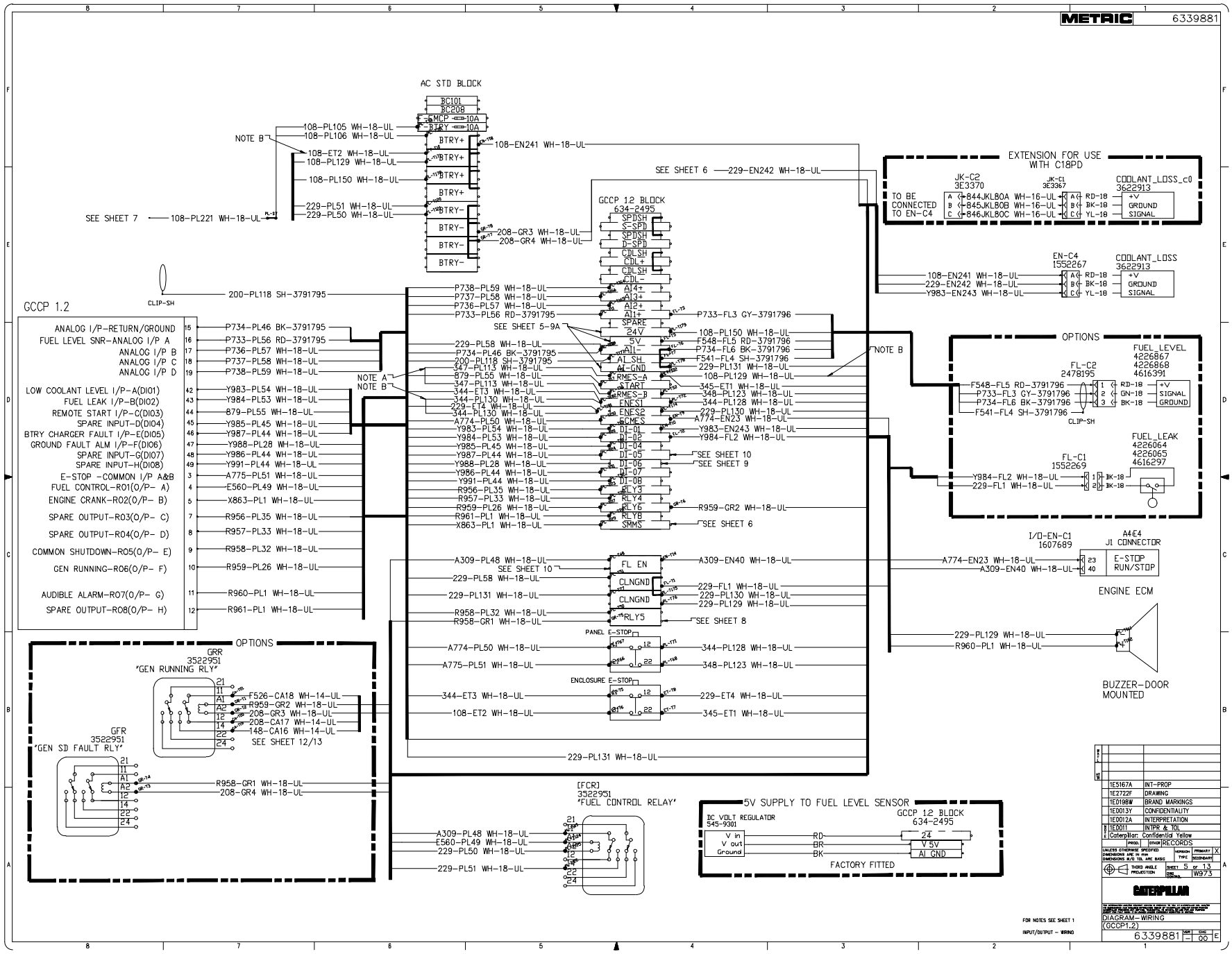
METRIC
6339881
AC STD BLOCK
BC101
BC208
MCP 10A
BTRY 10A
BTRY+
BTRY-
NOTE B
108-PL105 WH-18-UL
108-PL106 WH-18-UL
108-ET2 WH-18-UL
108-PL129 WH-18-UL
108-PL150 WH-18-UL
229-PL51 WH-18-UL
229-PL50 WH-18-UL
108-EN241 WH-18-UL
SEE SHEET 7
108-PL221 WH-18-UL
208-GR3 WH-18-UL
208-GR4 WH-18-UL
GCCP 12 BLOCK
634-2495
SPDSH
S-SPD
SPDSH
D-SPD
CDLSH
CDL+
CDLSH
CDL-
SEE SHEET 6
229-EN242 WH-18-UL
EXTENSION FOR USE WITH C18PD
JK-C2
3E3370
JK-C1
3E3367
TO BE CONNECTED TO EN-C4
844JKL80A WH-16-UL
845JKL80B WH-16-UL
846JKL80C WH-16-UL
RD-18
BK-18
YL-18
COOLANT_LOSS_C0
3622913
+V
GROUND
SIGNAL
EN-C4
1552267
COOLANT_LOSS
3622913
108-EN241 WH-18-UL
229-EN242 WH-18-UL
Y983-EN243 WH-18-UL
CLIP-SH
200-PL118 SH-3791795
GCCP 1.2
ANALOG I/P-RETURN/GROUND
FUEL LEVEL SNR-ANALOG I/P A
ANALOG I/P B
ANALOG I/P C
ANALOG I/P D
LOW COOLANT LEVEL I/P-A(DI01)
FUEL LEAK I/P-B(DI02)
REMOTE START I/P-C(DI03)
SPARE INPUT-D(DI04)
BTRY CHARGER FAULT I/P-E(DI05)
GROUND FAULT ALM I/P-F(DI06)
SPARE INPUT-G(DI07)
SPARE INPUT-H(DI08)
E-STOP -COMMON I/P A&B
FUEL CONTROL-R01(O/P- A)
ENGINE CRANK-R02(O/P- B)
SPARE OUTPUT-R03(O/P- C)
SPARE OUTPUT-R04(O/P- D)
COMMON SHUTDOWN-R05(O/P- E)
GEN RUNNING-R06(O/P- F)
AUDIBLE ALARM-R07(O/P- G)
SPARE OUTPUT-R08(O/P- H)
P734-PL46 BK-3791795
P733-PL56 RD-3791795
P736-PL57 WH-18-UL
P737-PL58 WH-18-UL
P738-PL59 WH-18-UL
Y983-PL54 WH-18-UL
Y984-PL53 WH-18-UL
879-PL55 WH-18-UL
Y985-PL45 WH-18-UL
Y987-PL44 WH-18-UL
Y988-PL28 WH-18-UL
Y986-PL44 WH-18-UL
Y991-PL44 WH-18-UL
A775-PL51 WH-18-UL
E560-PL49 WH-18-UL
X863-PL1 WH-18-UL
R956-PL35 WH-18-UL
R957-PL33 WH-18-UL
R958-PL32 WH-18-UL
R959-PL26 WH-18-UL
R960-PL1 WH-18-UL
R961-PL1 WH-18-UL
NOTE A
NOTE B
P738-PL59 WH-18-UL
P737-PL58 WH-18-UL
P736-PL57 WH-18-UL
P733-PL56 RD-3791795
SEE SHEET 5-9A
229-PL58 WH-18-UL
P734-PL46 BK-3791795
200-PL118 SH-3791795
347-PL113 WH-18-UL
879-PL55 WH-18-UL
347-PL113 WH-18-UL
344-ET3 WH-18-UL
344-PL130 WH-18-UL
229-ET4 WH-18-UL
344-PL130 WH-18-UL
A774-PL50 WH-18-UL
Y983-PL54 WH-18-UL
Y984-PL53 WH-18-UL
Y985-PL45 WH-18-UL
Y987-PL44 WH-18-UL
Y988-PL28 WH-18-UL
Y986-PL44 WH-18-UL
Y991-PL44 WH-18-UL
R956-PL35 WH-18-UL
R957-PL33 WH-18-UL
R959-PL26 WH-18-UL
R961-PL1 WH-18-UL
X863-PL1 WH-18-UL
AI4+
AI3+
AI2+
AI1+
SPARE
24V
5V
AI1-
AI_SH
AI-GND
RMES-A
START
RMES-B
ENES1
ENES2
SCMES
DI-01
DI-02
DI-04
DI-05
DI-06
DI-07
DI-08
RLY3
RLY4
RLY6
RLY8
SMMS
P733-FL3 GY-3791796
108-PL150 WH-18-UL
F548-FL5 RD-3791796
P734-FL6 BK-3791796
F541-FL4 SH-3791796
229-PL131 WH-18-UL
108-PL129 WH-18-UL
345-ET1 WH-18-UL
348-PL123 WH-18-UL
344-PL128 WH-18-UL
229-PL130 WH-18-UL
A774-EN23 WH-18-UL
Y983-EN243 WH-18-UL
Y984-FL2 WH-18-UL
SEE SHEET 10
SEE SHEET 9
R959-GR2 WH-18-UL
SEE SHEET 6
NOTE B
OPTIONS
FUEL_LEVEL
4226867
4226868
4616391
FL-C2
2478195
F548-FL5 RD-3791796
P733-FL3 GY-3791796
P734-FL6 BK-3791796
F541-FL4 SH-3791796
CLIP-SH
+V
SIGNAL
GROUND
FUEL_LEAK
4226064
4226065
4616297
FL-C1
1552269
Y984-FL2 WH-18-UL
229-FL1 WH-18-UL
I/O-EN-C1
1607689
A4-E4
J1 CONNECTOR
A774-EN23 WH-18-UL
A309-EN40 WH-18-UL
E-STOP
RUN/STOP
ENGINE ECM
229-PL129 WH-18-UL
R960-PL1 WH-18-UL
BUZZER-DOOR MOUNTED
A309-PL48 WH-18-UL
SEE SHEET 10
229-PL58 WH-18-UL
229-PL131 WH-18-UL
R958-PL32 WH-18-UL
R958-GR1 WH-18-UL
FL EN
CLNGND
CLNGND
RLY5
A309-EN40 WH-18-UL
229-FL1 WH-18-UL
229-PL130 WH-18-UL
229-PL129 WH-18-UL
SEE SHEET 8
PANEL E-STOP
A774-PL50 WH-18-UL
A775-PL51 WH-18-UL
344-PL128 WH-18-UL
348-PL123 WH-18-UL
ENCLOSURE E-STOP
344-ET3 WH-18-UL
108-ET2 WH-18-UL
229-ET4 WH-18-UL
345-ET1 WH-18-UL
229-PL131 WH-18-UL
OPTIONS
GRR
3522951
"GEN RUNNING RLY"
F526-CA18 WH-14-UL
R959-GR2 WH-18-UL
208-GR3 WH-18-UL
208-CA17 WH-14-UL
148-CA16 WH-14-UL
SEE SHEET 12/13
GFR
3522951
"GEN SD FAULT RLY"
R958-GR1 WH-18-UL
208-GR4 WH-18-UL
[FCR]
3522951
"FUEL CONTROL RELAY"
A309-PL48 WH-18-UL
E560-PL49 WH-18-UL
229-PL50 WH-18-UL
229-PL51 WH-18-UL
5V SUPPLY TO FUEL LEVEL SENSOR
DC VOLT REGULATOR
545-9301
V in
V out
Ground
RD
BR
BK
GCCP 12 BLOCK
634-2495
24
V 5V
AI GND
FACTORY FITTED
FOR NOTES SEE SHEET 1
INPUT/OUTPUT - WIRING
1E5167A INT-PROP
1E2722F DRAWING
1E0198W BRAND MARKINGS
1E0013Y CONFIDENTIALITY
1E0012A INTERPRETATION
1E0011 INTPR & TOL
Caterpillar: Confidential Yellow
RECORDS
UNLESS OTHERWISE SPECIFIED
DIMENSIONS ARE IN mm
DIMENSIONS A/D TOL ARE BASIC
THIRD ANGLE PROJECTION
SHEET 5 OF 13
W973
CATERPILLAR
DIAGRAM-WIRING
(GCCP1.2)
6339881
00

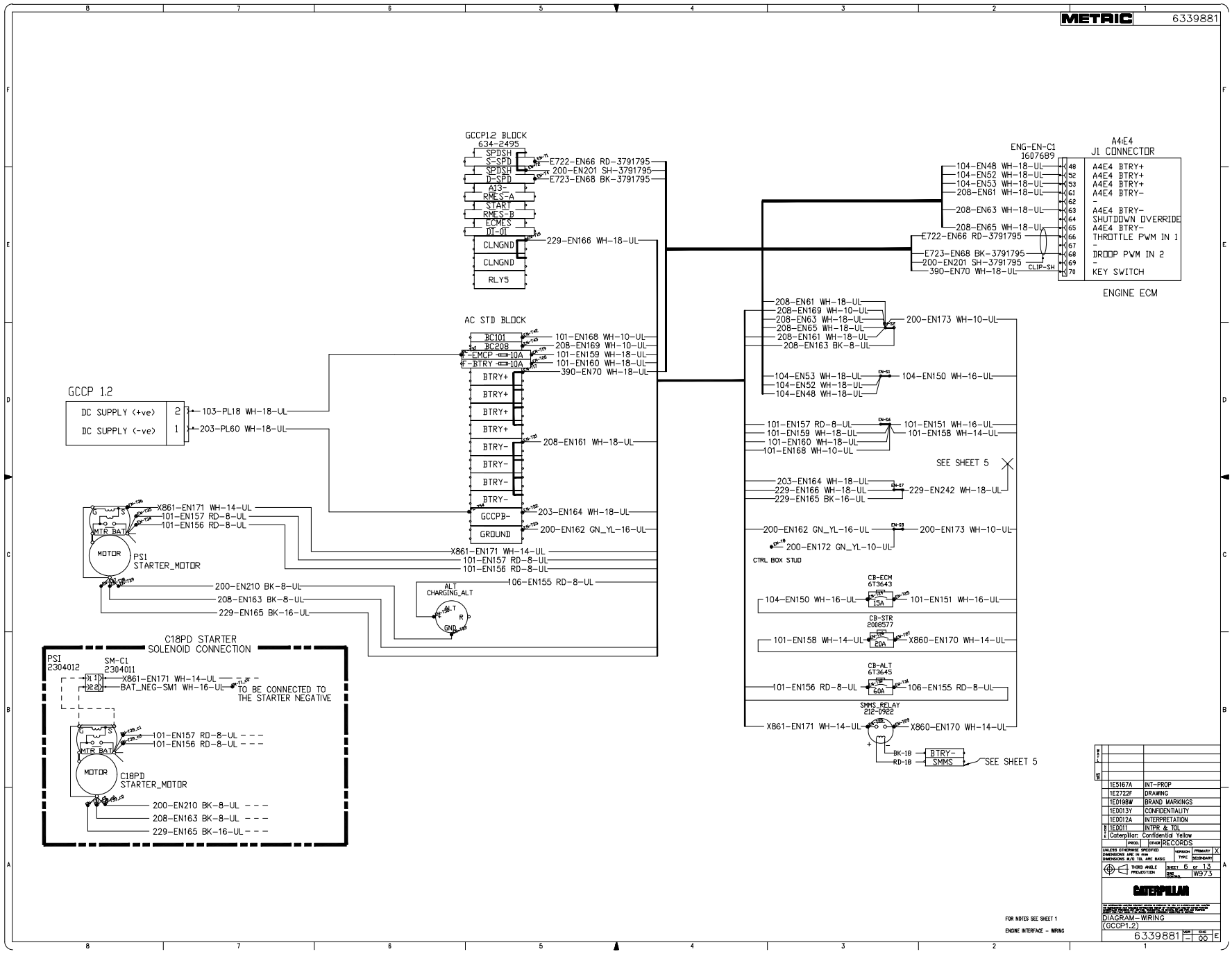
METRIC 6339881
GCCP1.2 BLOCK
634-2495
SPDSH
S-SPD
SPDSH
D-SPD
A13-
RMES-A
START
RMES-B
ECMES
DI-01
CLNGND
CLNGND
RLY5
E722-EN66 RD-3791795
200-EN201 SH-3791795
E723-EN68 BK-3791795
229-EN166 WH-18-UL
AC STD BLOCK
BC101
BC208
F-EMCP 10A
F-BTRY 10A
BTRY+
BTRY+
BTRY+
BTRY+
BTRY-
BTRY-
BTRY-
BTRY-
GCCPB-
GROUND
101-EN168 WH-10-UL
208-EN169 WH-10-UL
101-EN159 WH-18-UL
101-EN160 WH-18-UL
390-EN70 WH-18-UL
208-EN161 WH-18-UL
203-EN164 WH-18-UL
200-EN162 GN_YL-16-UL
GCCP 1.2
DC SUPPLY (+ve)
DC SUPPLY (-ve)
103-PL18 WH-18-UL
203-PL60 WH-18-UL
X861-EN171 WH-14-UL
101-EN157 RD-8-UL
101-EN156 RD-8-UL
MTR BAT
MOTOR
PSI
STARTER_MOTOR
200-EN210 BK-8-UL
208-EN163 BK-8-UL
229-EN165 BK-16-UL
106-EN155 RD-8-UL
ALT
CHARGING_ALT
ALT
R
GND
C18PD STARTER
SOLENOID CONNECTION
PSI
2304012
SM-C1
2304011
X861-EN171 WH-14-UL
BAT_NEG-SM1 WH-16-UL
TO BE CONNECTED TO
THE STARTER NEGATIVE
101-EN157 RD-8-UL
101-EN156 RD-8-UL
MTR BAT
MOTOR
C18PD
STARTER_MOTOR
200-EN210 BK-8-UL
208-EN163 BK-8-UL
229-EN165 BK-16-UL
ENG-EN-C1
1607689
A4:E4
J1 CONNECTOR
104-EN48 WH-18-UL
104-EN52 WH-18-UL
104-EN53 WH-18-UL
208-EN61 WH-18-UL
208-EN63 WH-18-UL
208-EN65 WH-18-UL
E722-EN66 RD-3791795
E723-EN68 BK-3791795
200-EN201 SH-3791795
390-EN70 WH-18-UL
CLIP-SH
A4E4 BTRY+
A4E4 BTRY+
A4E4 BTRY+
A4E4 BTRY-
A4E4 BTRY-
SHUTDOWN OVERRIDE
A4E4 BTRY-
THROTTLE PWM IN 1
DROOP PWM IN 2
KEY SWITCH
ENGINE ECM
208-EN61 WH-18-UL
208-EN169 WH-10-UL
208-EN63 WH-18-UL
208-EN65 WH-18-UL
208-EN161 WH-18-UL
208-EN163 BK-8-UL
200-EN173 WH-10-UL
104-EN53 WH-18-UL
104-EN52 WH-18-UL
104-EN48 WH-18-UL
104-EN150 WH-16-UL
101-EN157 RD-8-UL
101-EN159 WH-18-UL
101-EN160 WH-18-UL
101-EN168 WH-10-UL
101-EN151 WH-16-UL
101-EN158 WH-14-UL
SEE SHEET 5
203-EN164 WH-18-UL
229-EN166 WH-18-UL
229-EN165 BK-16-UL
229-EN242 WH-18-UL
200-EN162 GN_YL-16-UL
200-EN173 WH-10-UL
200-EN172 GN_YL-10-UL
CTRL BOX STUD
CB-ECM
6T3643
15A
104-EN150 WH-16-UL
101-EN151 WH-16-UL
CB-STR
2008577
20A
101-EN158 WH-14-UL
X860-EN170 WH-14-UL
CB-ALT
6T3645
60A
101-EN156 RD-8-UL
106-EN155 RD-8-UL
SMMS_RELAY
212-0922
X861-EN171 WH-14-UL
X860-EN170 WH-14-UL
BK-18
RD-18
BTRY-
SMMS
SEE SHEET 5
1E5167A INT-PROP
1E2722F DRAWING
1E0198W BRAND MARKINGS
1E0013Y CONFIDENTIALITY
1E0012A INTERPRETATION
1E0011 INTPR & TOL
Caterpillar: Confidential Yellow
RECORDS
THIRD ANGLE PROJECTION
SHEET 6 OF 13
W973
CATERPILLAR
DIAGRAM-WIRING
(GCCP1.2)
6339881
00
FOR NOTES SEE SHEET 1
ENGINE INTERFACE - WIRING

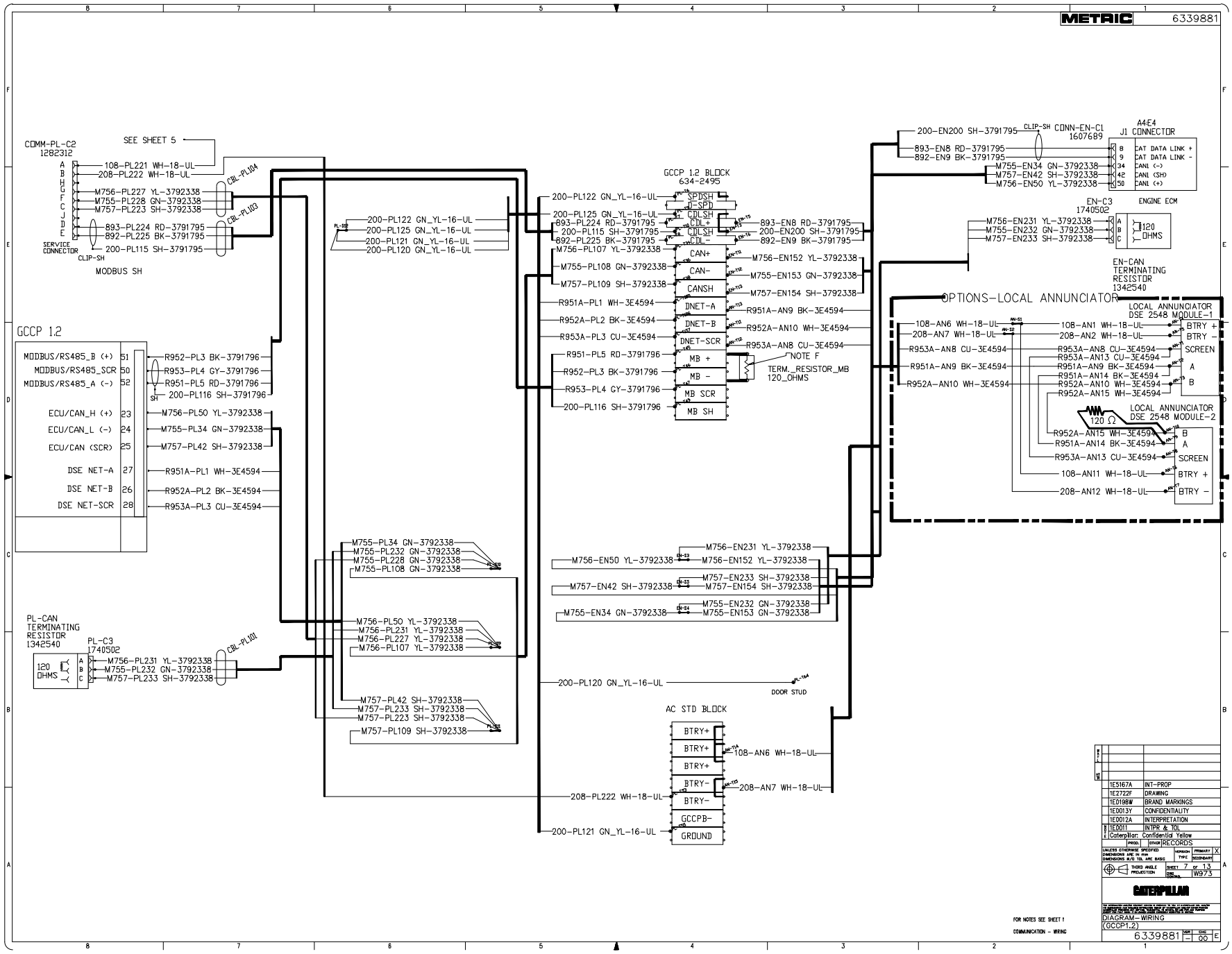
METRIC
6339881
COMM-PL-C2
1282312
SEE SHEET 5
108-PL221 WH-18-UL
208-PL222 WH-18-UL
M756-PL227 YL-3792338
M755-PL228 GN-3792338
M757-PL223 SH-3792338
893-PL224 RD-3791795
892-PL225 BK-3791795
200-PL115 SH-3791795
CBL-PL104
CBL-PL103
SERVICE CONNECTOR
CLIP-SH
MODBUS SH
GCCP 1.2
MODBUS/RS485_B (+) 51
MODBUS/RS485_SCR 50
MODBUS/RS485_A (-) 52
ECU/CAN_H (+) 23
ECU/CAN_L (-) 24
ECU/CAN (SCR) 25
DSE NET-A 27
DSE NET-B 26
DSE NET-SCR 28
R952-PL3 BK-3791796
R953-PL4 GY-3791796
R951-PL5 RD-3791796
200-PL116 SH-3791796
M756-PL50 YL-3792338
M755-PL34 GN-3792338
M757-PL42 SH-3792338
R951A-PL1 WH-3E4594
R952A-PL2 BK-3E4594
R953A-PL3 CU-3E4594
PL-CAN TERMINATING RESISTOR
1342540
PL-C3
1740502
120 OHMS
M756-PL231 YL-3792338
M755-PL232 GN-3792338
M757-PL233 SH-3792338
CBL-PL101
200-PL122 GN_YL-16-UL
200-PL125 GN_YL-16-UL
200-PL115 SH-3791795
200-PL121 GN_YL-16-UL
200-PL120 GN_YL-16-UL
M755-PL34 GN-3792338
M755-PL232 GN-3792338
M755-PL228 GN-3792338
M755-PL108 GN-3792338
M756-PL50 YL-3792338
M756-PL231 YL-3792338
M756-PL227 YL-3792338
M756-PL107 YL-3792338
M757-PL42 SH-3792338
M757-PL233 SH-3792338
M757-PL223 SH-3792338
M757-PL109 SH-3792338
GCCP 1.2 BLOCK
634-2495
SPDSH
J-SPD
CDLSH
CDL+
CDL-
CAN+
CAN-
CANSH
DNET-A
DNET-B
DNET-SCR
MB +
MB -
MB SCR
MB SH
893-PL224 RD-3791795
892-PL225 BK-3791795
M756-PL107 YL-3792338
M755-PL108 GN-3792338
M757-PL109 SH-3792338
R951A-PL1 WH-3E4594
R952A-PL2 BK-3E4594
R953A-PL3 CU-3E4594
R951-PL5 RD-3791796
R952-PL3 BK-3791796
R953-PL4 GY-3791796
200-PL116 SH-3791796
893-EN8 RD-3791795
200-EN200 SH-3791795
892-EN9 BK-3791795
M756-EN152 YL-3792338
M755-EN153 GN-3792338
M757-EN154 SH-3792338
R951A-AN9 BK-3E4594
R952A-AN10 WH-3E4594
R953A-AN8 CU-3E4594
NOTE F
TERM._RESISTOR_MB
120_OHMS
M756-EN50 YL-3792338
M757-EN42 SH-3792338
M755-EN34 GN-3792338
M756-EN231 YL-3792338
M756-EN152 YL-3792338
M757-EN233 SH-3792338
M757-EN154 SH-3792338
M755-EN232 GN-3792338
M755-EN153 GN-3792338
200-PL120 GN_YL-16-UL
DOOR STUD
AC STD BLOCK
BTRY+
BTRY+
BTRY+
BTRY-
BTRY-
GCCPB-
GROUND
108-AN6 WH-18-UL
208-AN7 WH-18-UL
208-PL222 WH-18-UL
200-PL121 GN_YL-16-UL
200-EN200 SH-3791795
CLIP-SH
CONN-EN-C1
1607689
893-EN8 RD-3791795
892-EN9 BK-3791795
M755-EN34 GN-3792338
M757-EN42 SH-3792338
M756-EN50 YL-3792338
A4E4
J1 CONNECTOR
B CAT DATA LINK +
9 CAT DATA LINK -
34 CAN1 (-)
42 CAN1 (SH)
50 CAN1 (+)
EN-C3
1740502
ENGINE ECM
M756-EN231 YL-3792338
M755-EN232 GN-3792338
M757-EN233 SH-3792338
120 OHMS
EN-CAN TERMINATING RESISTOR
1342540
OPTIONS-LOCAL ANNUNCIATOR
LOCAL ANNUNCIATOR DSE 2548 MODULE-1
108-AN6 WH-18-UL
208-AN7 WH-18-UL
R953A-AN8 CU-3E4594
R951A-AN9 BK-3E4594
R952A-AN10 WH-3E4594
108-AN1 WH-18-UL
208-AN2 WH-18-UL
R953A-AN8 CU-3E4594
R953A-AN13 CU-3E4594
R951A-AN9 BK-3E4594
R952A-AN10 WH-3E4594
R952A-AN15 WH-3E4594
BTRY +
BTRY -
SCREEN
A
B
120 Ω
LOCAL ANNUNCIATOR DSE 2548 MODULE-2
R952A-AN15 WH-3E4594
R951A-AN14 BK-3E4594
R953A-AN13 CU-3E4594
108-AN11 WH-18-UL
208-AN12 WH-18-UL
B
A
SCREEN
BTRY +
BTRY -
FOR NOTES SEE SHEET 1
COMMUNICATION - WIRING
1E5167A INT-PROP
1E2722F DRAWING
1E0198W BRAND MARKINGS
1E0013Y CONFIDENTIALITY
1E0012A INTERPRETATION
1E0011 INTPR & TOL
Caterpillar: Confidential Yellow
RECORDS
THIRD ANGLE PROJECTION
SHEET 7 OF 13
W973
CATERPILLAR
DIAGRAM-WIRING
(GCCP1.2)
6339881
00

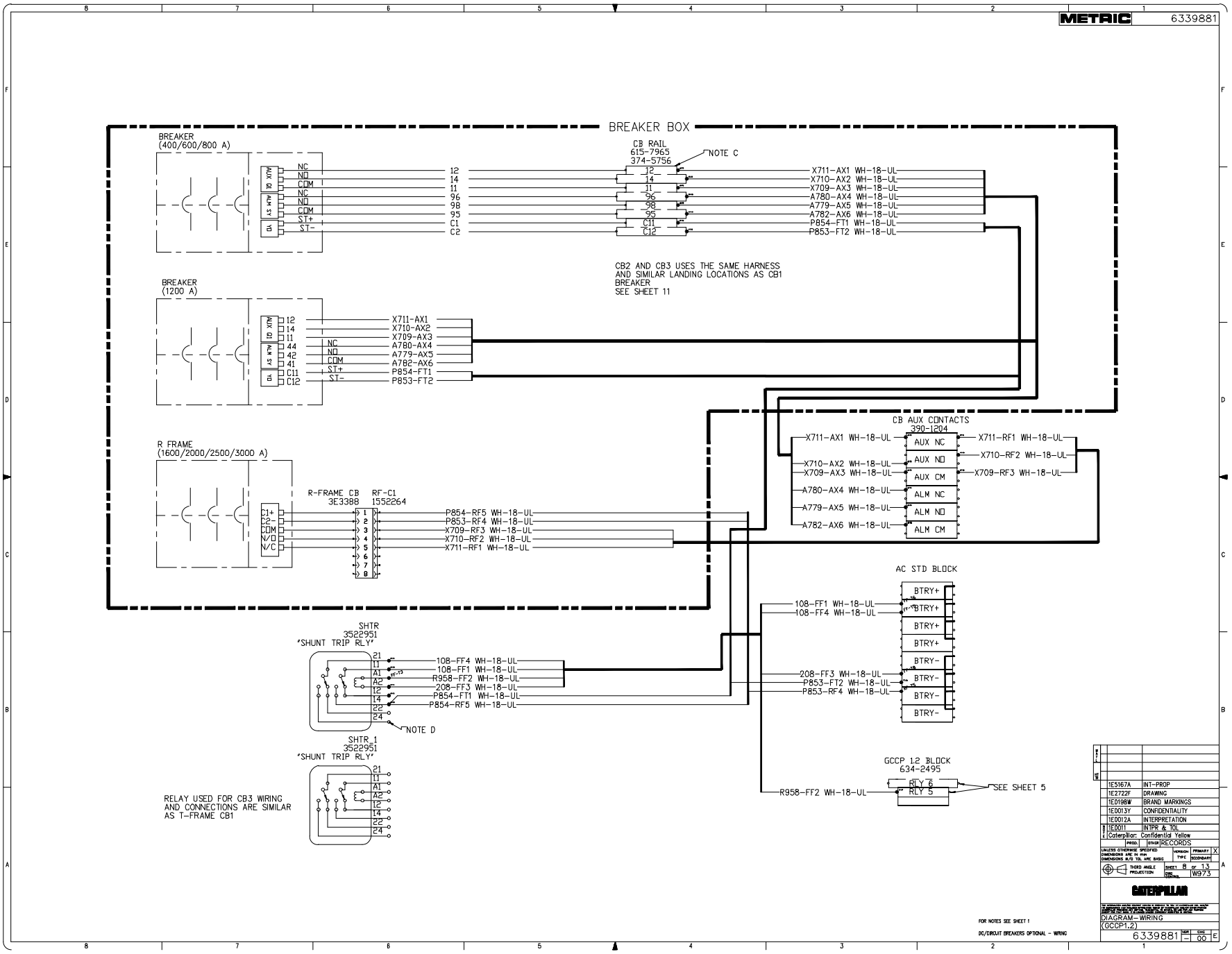
METRIC 6339881
BREAKER BOX
BREAKER (400/600/800 A)
CB RAIL 615-7965 374-5756
NOTE C
X711-AX1 WH-18-UL
X710-AX2 WH-18-UL
X709-AX3 WH-18-UL
A780-AX4 WH-18-UL
A779-AX5 WH-18-UL
A782-AX6 WH-18-UL
P854-FT1 WH-18-UL
P853-FT2 WH-18-UL
CB2 AND CB3 USES THE SAME HARNESS AND SIMILAR LANDING LOCATIONS AS CB1 BREAKER SEE SHEET 11
BREAKER (1200 A)
R FRAME (1600/2000/2500/3000 A)
R-FRAME CB 3E3388
RF-C1 1552264
P854-RF5 WH-18-UL
P853-RF4 WH-18-UL
X709-RF3 WH-18-UL
X710-RF2 WH-18-UL
X711-RF1 WH-18-UL
CB AUX CONTACTS 390-1204
AUX NC
AUX NO
AUX CM
ALM NC
ALM NO
ALM CM
AC STD BLOCK
BTRY+
BTRY-
108-FF1 WH-18-UL
108-FF4 WH-18-UL
208-FF3 WH-18-UL
P853-FT2 WH-18-UL
P853-RF4 WH-18-UL
SHTR 3522951 "SHUNT TRIP RLY"
108-FF4 WH-18-UL
108-FF1 WH-18-UL
R958-FF2 WH-18-UL
208-FF3 WH-18-UL
P854-FT1 WH-18-UL
P854-RF5 WH-18-UL
NOTE D
SHTR_1 3522951 "SHUNT TRIP RLY"
RELAY USED FOR CB3 WIRING AND CONNECTIONS ARE SIMILAR AS T-FRAME CB1
GCCP 1.2 BLOCK 634-2495
RLY 6
RLY 5
R958-FF2 WH-18-UL
SEE SHEET 5
FOR NOTES SEE SHEET 1
DC/CIRCUIT BREAKERS OPTIONAL - WIRING
1E5167A INT-PROP
1E2722F DRAWING
1E0198W BRAND MARKINGS
1E0013Y CONFIDENTIALITY
1E0012A INTERPRETATION
1E0011 INTPR & TOL
Caterpillar: Confidential Yellow
RECORDS
THIRD ANGLE PROJECTION
SHEET 8 OF 13
W973
CATERPILLAR
DIAGRAM-WIRING
(GCCP1.2)
6339881
00

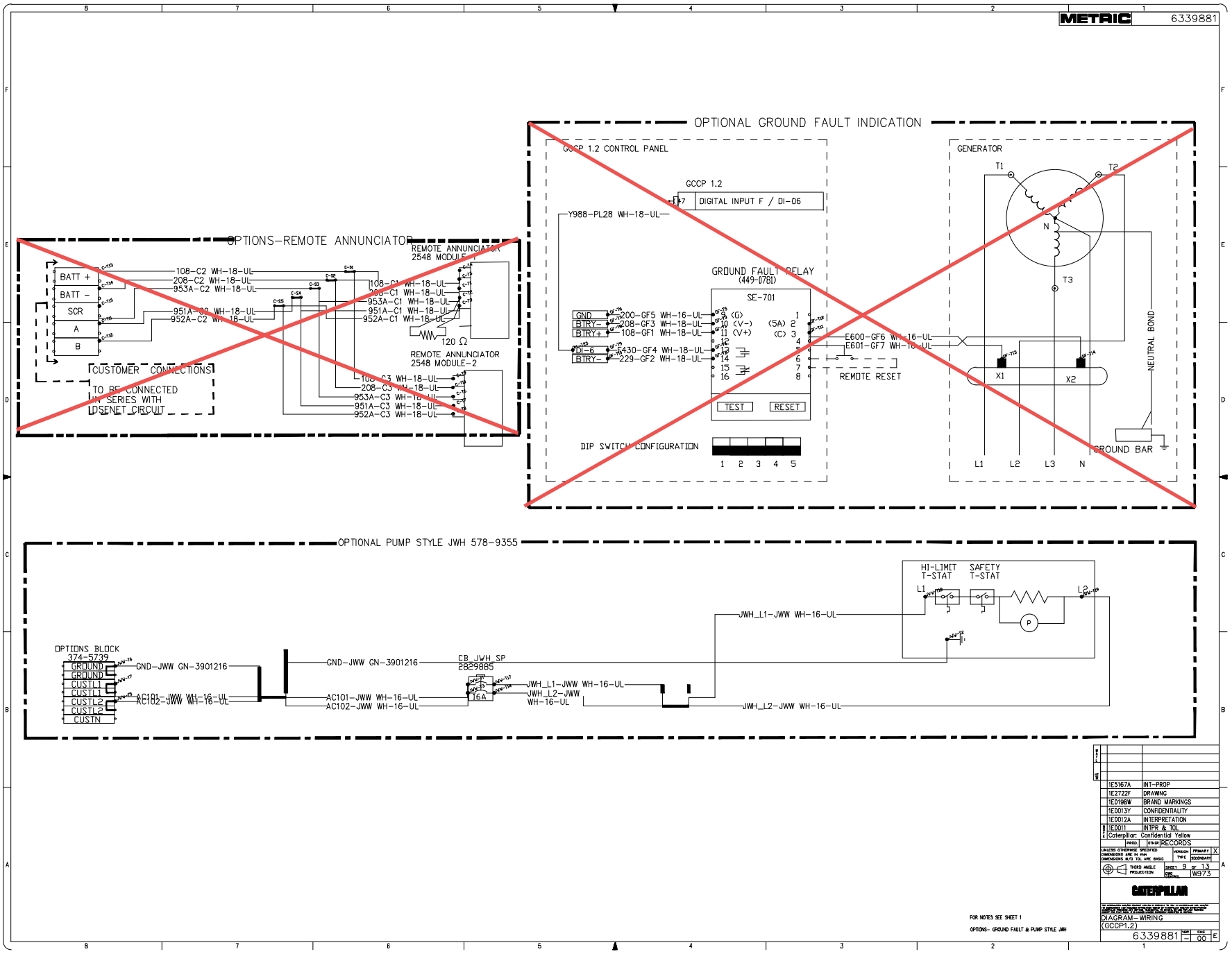
METRIC
6339881
OPTIONAL GROUND FAULT INDICATION
GCCP 1.2 CONTROL PANEL
GCCP 1.2
DIGITAL INPUT F / DI-06
Y988-PL28 WH-18-UL
GROUND FAULT RELAY
(449-0781)
SE-701
GND
BTRY-
BTRY+
DI-6
BTRY-
200-GF5 WH-16-UL
208-GF3 WH-18-UL
108-GF1 WH-18-UL
430-GF4 WH-18-UL
229-GF2 WH-18-UL
(G)
(V-)
(V+)
(5A)
(C)
E600-GF6 WH-16-UL
E601-GF7 WH-16-UL
REMOTE RESET
TEST
RESET
DIP SWITCH CONFIGURATION
1 2 3 4 5
GENERATOR
T1
T2
T3
N
X1
X2
NEUTRAL BOND
GROUND BAR
L1 L2 L3 N
OPTIONS-REMOTE ANNUNCIATOR
BATT +
BATT -
SCR
A
B
108-C2 WH-18-UL
208-C2 WH-18-UL
953A-C2 WH-18-UL
951A-C2 WH-18-UL
952A-C2 WH-18-UL
REMOTE ANNUNCIATOR
2548 MODULE-1
108-C1 WH-18-UL
208-C1 WH-18-UL
953A-C1 WH-18-UL
951A-C1 WH-18-UL
952A-C1 WH-18-UL
120 Ω
REMOTE ANNUNCIATOR
2548 MODULE-2
108-C3 WH-18-UL
208-C3 WH-18-UL
953A-C3 WH-18-UL
951A-C3 WH-18-UL
952A-C3 WH-18-UL
CUSTOMER CONNECTIONS
TO BE CONNECTED
IN SERIES WITH
DSENET CIRCUIT
OPTIONAL PUMP STYLE JWH 578-9355
HI-LIMIT
T-STAT
SAFETY
T-STAT
L1
L2
P
JWH_L1-JWW WH-16-UL
OPTIONS BLOCK
374-5739
GROUND
GROUND
CUSTL1
CUSTL1
CUSTL2
CUSTL2
CUSTN
GND-JWW GN-3901216
GND-JWW GN-3901216
CB_JWH_SP
2829885
16A
AC101-JWW WH-16-UL
AC102-JWW WH-16-UL
AC101-JWW WH-16-UL
AC102-JWW WH-16-UL
JWH_L1-JWW WH-16-UL
JWH_L2-JWW
WH-16-UL
JWH_L2-JWW WH-16-UL
1E5167A INT-PROP
1E2722F DRAWING
1E0198W BRAND MARKINGS
1E0013Y CONFIDENTIALITY
1E0012A INTERPRETATION
1E0011 INTPR & TOL
Caterpillar: Confidential Yellow
PROD. OTHER RECORDS
UNLESS OTHERWISE SPECIFIED
DIMENSIONS ARE IN mm
DIMENSIONS B/O TOL ARE BASIC
VERSION TYPE
PRIMARY X
SECONDARY
THIRD ANGLE PROJECTION
SHEET 9 OF 13
DWG SIZE
W973
CATERPILLAR
DIAGRAM-WIRING
(GCCP1.2)
6339881
00
E
FOR NOTES SEE SHEET 1
OPTIONS- GROUND FAULT & PUMP STYLE JWH

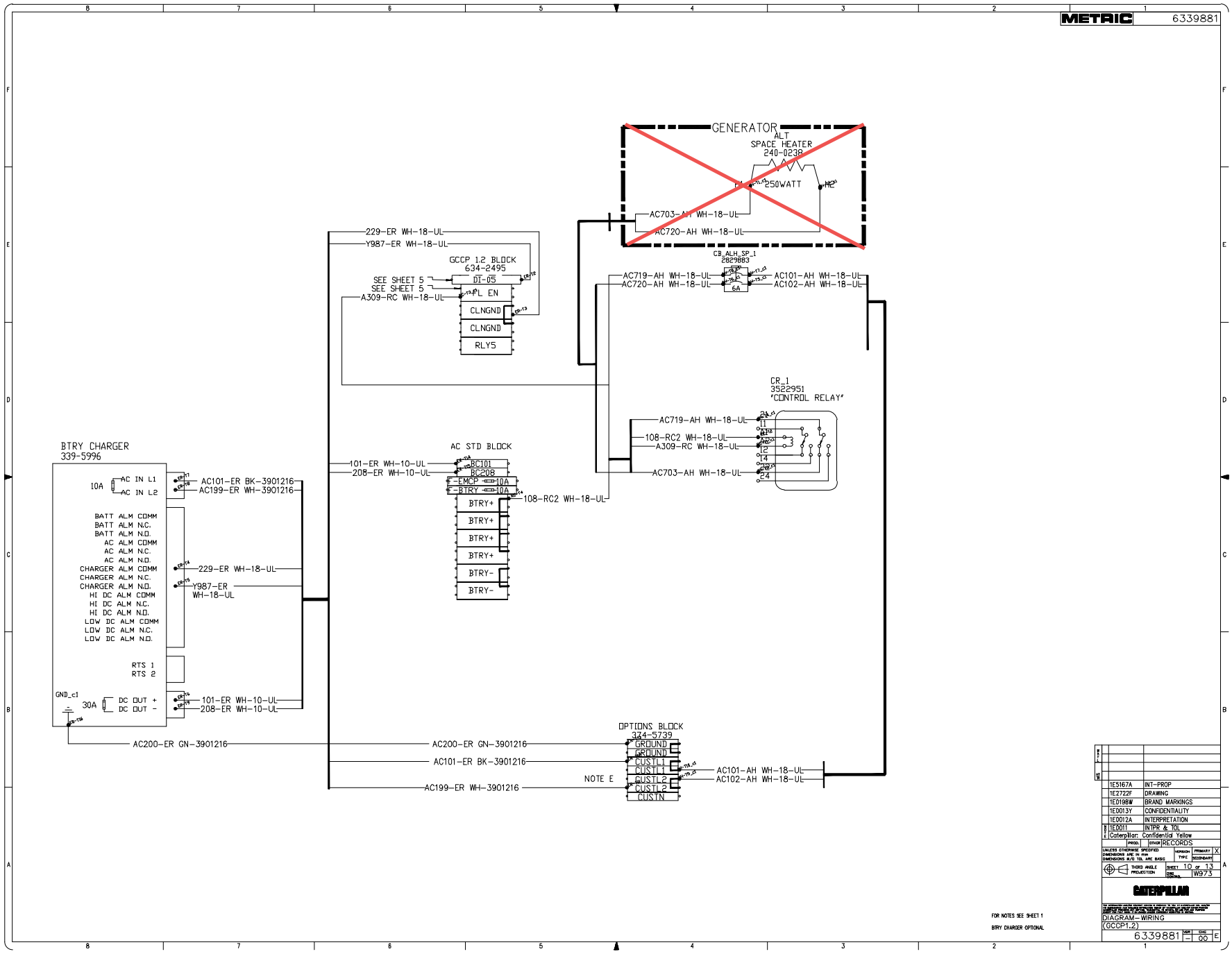
METRIC
6339881
GENERATOR
ALT
SPACE HEATER
240-0238
250WATT
AC703-AH WH-18-UL
AC720-AH WH-18-UL
229-ER WH-18-UL
Y987-ER WH-18-UL
GCCP 1,2 BLOCK
634-2495
SEE SHEET 5
SEE SHEET 5
A309-RC WH-18-UL
DT-05
FL EN
CLNGND
CLNGND
RLY5
CB_ALH_SP_1
2829883
6A
AC719-AH WH-18-UL
AC720-AH WH-18-UL
AC101-AH WH-18-UL
AC102-AH WH-18-UL
CR_1
3522951
"CONTROL RELAY"
AC719-AH WH-18-UL
108-RC2 WH-18-UL
A309-RC WH-18-UL
AC703-AH WH-18-UL
BTRY CHARGER
339-5996
10A
AC IN L1
AC IN L2
BATT ALM COMM
BATT ALM N.C.
BATT ALM N.O.
AC ALM COMM
AC ALM N.C.
AC ALM N.O.
CHARGER ALM COMM
CHARGER ALM N.C.
CHARGER ALM N.O.
HI DC ALM COMM
HI DC ALM N.C.
HI DC ALM N.O.
LOW DC ALM COMM
LOW DC ALM N.C.
LOW DC ALM N.O.
RTS 1
RTS 2
GND_c1
30A
DC OUT +
DC OUT -
AC101-ER BK-3901216
AC199-ER WH-3901216
229-ER WH-18-UL
Y987-ER WH-18-UL
101-ER WH-10-UL
208-ER WH-10-UL
AC200-ER GN-3901216
AC STD BLOCK
101-ER WH-10-UL
208-ER WH-10-UL
BC101
BC208
EMCP 10A
BTRY 10A
BTRY+
BTRY+
BTRY+
BTRY+
BTRY-
BTRY-
108-RC2 WH-18-UL
OPTIONS BLOCK
374-5739
GROUND
GROUND
CUSTL1
CUSTL1
CUSTL2
CUSTL2
CUSTN
AC200-ER GN-3901216
AC101-ER BK-3901216
AC199-ER WH-3901216
NOTE E
AC101-AH WH-18-UL
AC102-AH WH-18-UL
FOR NOTES SEE SHEET 1
BTRY CHARGER OPTIONAL
1E5167A INT-PROP
1E2722F DRAWING
1E0198W BRAND MARKINGS
1E0013Y CONFIDENTIALITY
1E0012A INTERPRETATION
1E0011 INTPR & TOL
Caterpillar: Confidential Yellow
PROD.
OTHER RECORDS
UNLESS OTHERWISE SPECIFIED
DIMENSIONS ARE IN mm
DIMENSIONS A/D TOL ARE BASIC
VERSION TYPE PRIMARY X SECONDARY
THIRD ANGLE PROJECTION
SHEET 10 OF 13
ENG CONTROL W973
CATERPILLAR
DIAGRAM-WIRING
(GCCP1,2)
6339881 DASH - SHEET 00 E

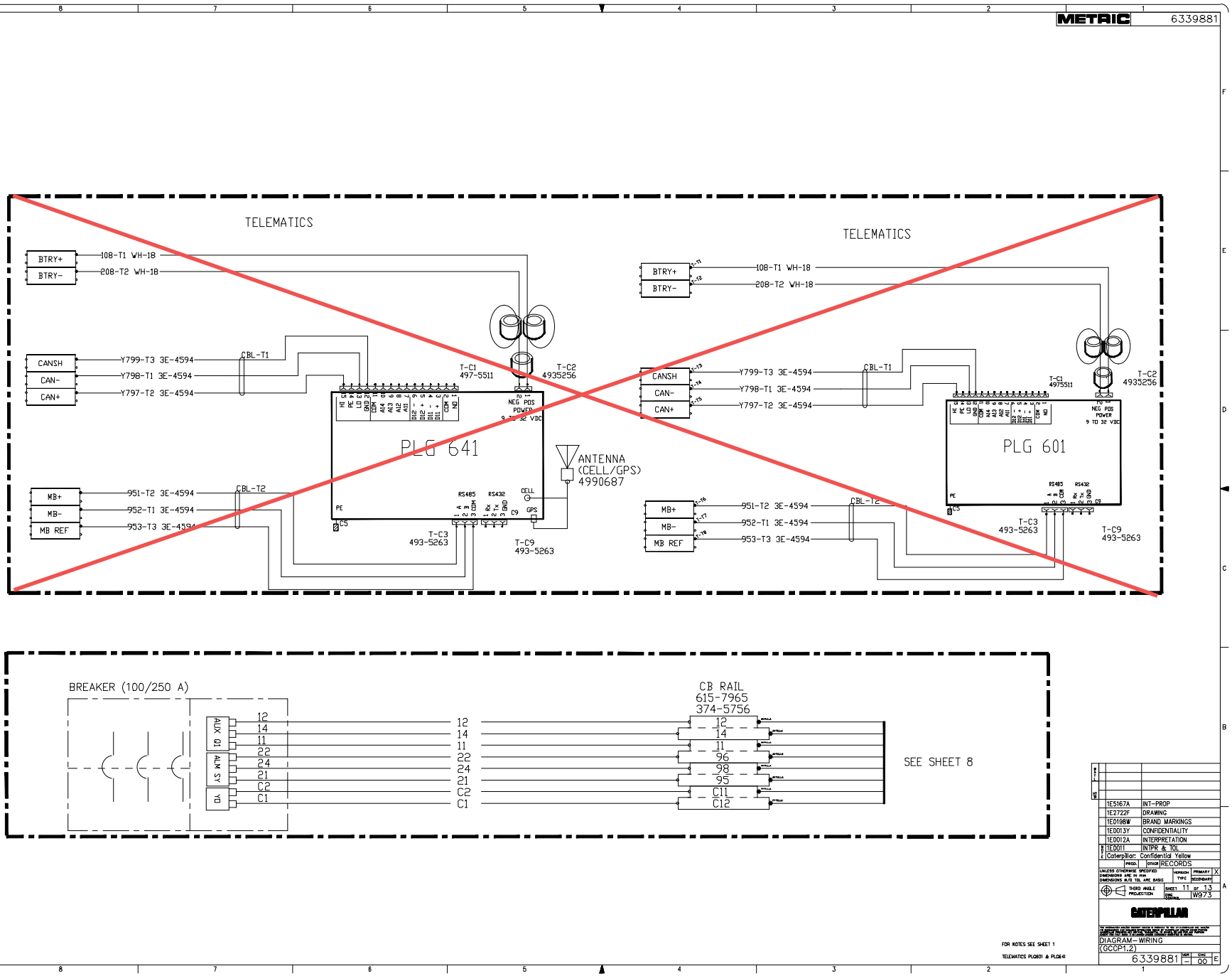
METRIC
6339881
TELEMATICS
BTRY+
BTRY-
108-T1 WH-18
208-T2 WH-18
CANSH
CAN-
CAN+
Y799-T3 3E-4594
Y798-T1 3E-4594
Y797-T2 3E-4594
CBL-T1
T-C1
497-5511
T-C2
4935256
PLG 641
NEG POS
POWER
9 TO 32 VDC
ANTENNA
(CELL/GPS)
4990687
MB+
MB-
MB REF
951-T2 3E-4594
952-T1 3E-4594
953-T3 3E-4594
CBL-T2
RS485
RS432
CELL
GPS
T-C3
493-5263
T-C9
493-5263
TELEMATICS
PLG 601
BREAKER (100/250 A)
AUX Q1
ALM S7
Q1
12
14
11
22
24
21
C2
C1
CB RAIL
615-7965
374-5756
96
98
95
C11
C12
SEE SHEET 8
FOR NOTES SEE SHEET 1
TELEMATICS PLG601 & PLG641
1E5167A INT-PROP
1E2722F DRAWING
1ED198W BRAND MARKINGS
1ED013Y CONFIDENTIALITY
1ED012A INTERPRETATION
1E0011 INTPR & TOL
Caterpillar: Confidential Yellow
PROD. OTHR RECORDS
UNLESS OTHERWISE SPECIFIED
DIMENSIONS ARE IN mm
DIMENSIONS A/D TOL ARE BASIC
VERSION TYPE PRIMARY X SECONDARY
THIRD ANGLE PROJECTION
SHEET 11 OF 13
SIZE W973
CATERPILLAR
DIAGRAM-WIRING
(GCCP1.2)
6339881 DASH – SHEET 00 E

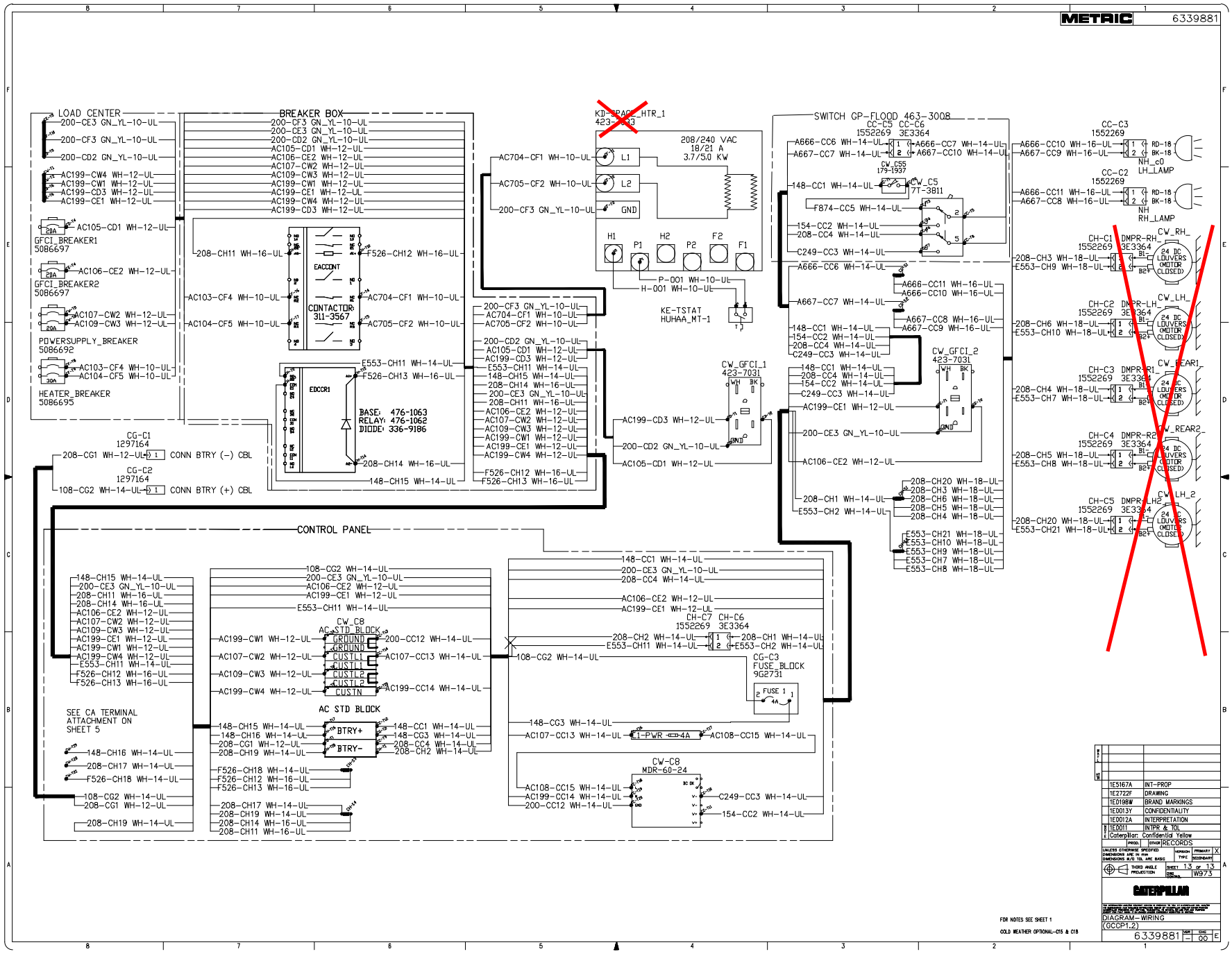
METRIC
6339881
LOAD CENTER
BREAKER BOX
GFCI_BREAKER1
5086697
GFCI_BREAKER2
5086697
POWERSUPPLY_BREAKER
5086692
HEATER_BREAKER
5086695
CONTACTOR
311-3567
EDCCR1
BASE: 476-1063
RELAY: 476-1062
DIODE: 336-9186
208/240 VAC
18/21 A
3.7/5.0 KW
KE-TSTAT
HUHAA_MT-1
SWITCH GP-FLOOD 463-3008
CW_GFCI_1
423-7031
CW_GFCI_2
423-7031
CG-C1
1297164
CONN BTRY (-) CBL
CG-C2
1297164
CONN BTRY (+) CBL
CONTROL PANEL
CW_C8
AC STD BLOCK
AC STD BLOCK
BTRY+
BTRY-
CG-C3
FUSE_BLOCK
9G2731
CW-C8
MDR-60-24
CH-C7 CH-C6
1552269 3E3364
CC-C5 CC-C6
1552269 3E3364
CW_C55
179-1937
CW_C5
7T-3811
CC-C3
1552269
CC-C2
1552269
CW_RH_
CW_LH_
CW_REAR1
CW_REAR2
CW_LH_2
24 DC LOUVERS (MOTOR CLOSED)
SEE CA TERMINAL ATTACHMENT ON SHEET 5
FOR NOTES SEE SHEET 1
COLD WEATHER OPTIONAL-C15 & C18
1E5167A INT-PROP
1E2722F DRAWING
1E0198W BRAND MARKINGS
1E0013Y CONFIDENTIALITY
1E0012A INTERPRETATION
1E0011 INTPR & TOL
Caterpillar: Confidential Yellow
RECORDS
SHEET 13 OF 13
W973
CATERPILLAR
DIAGRAM-WIRING
(GCCP1,2)
6339881
00

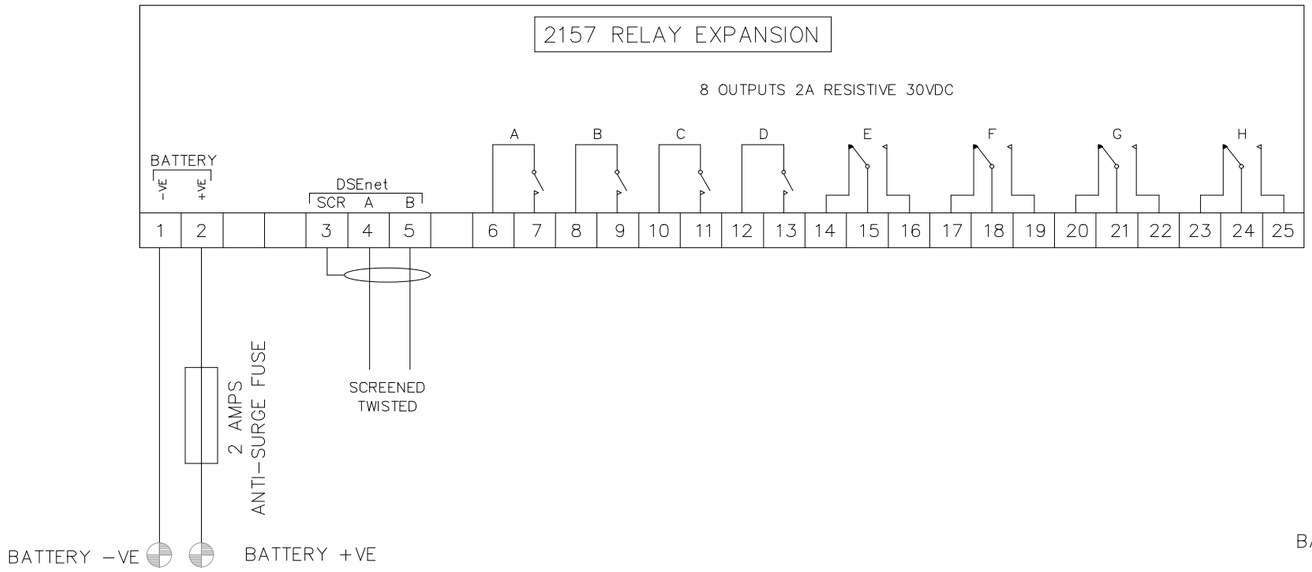

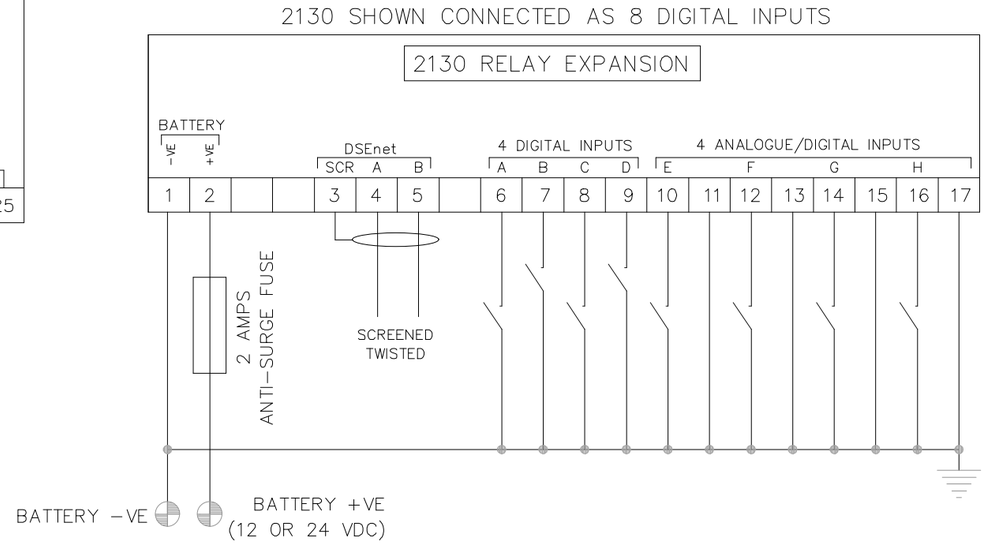

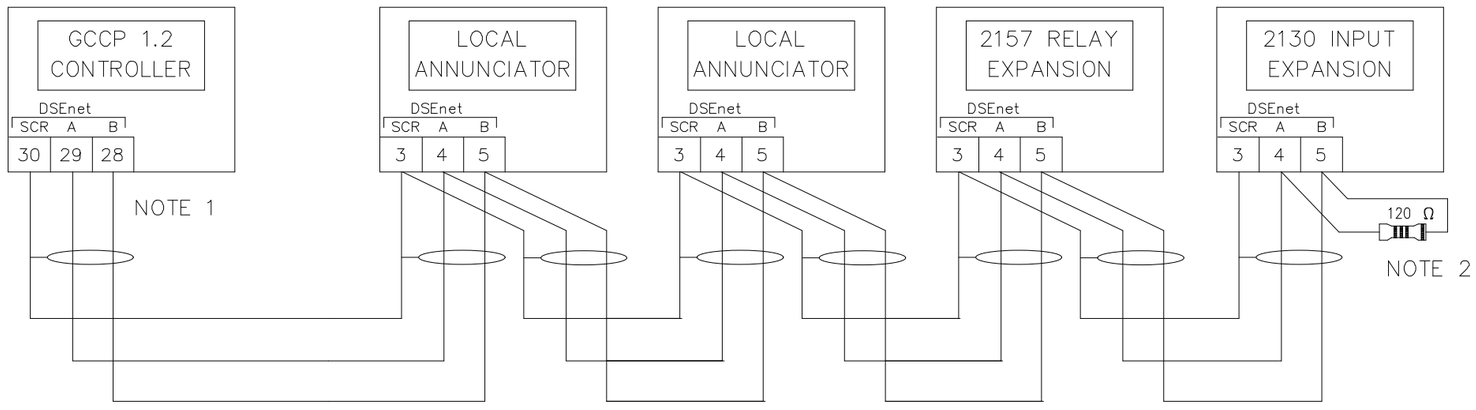

NOTE 1
AS A TERMINATING RESISTOR IS INTERNALLY FITTED TO THE HOST CONTROLLER, THE HOST CONTROLLER MUST BE THE FIRST UNIT ON THE DSEnet

NOTE 2
A 120 OHM TERMINATION RESISTOR MUST BE FITTED TO THE LAST UNIT ON THE DSEnet

DRAWN D. URIARTE	DATE 1/8/25	QUINN POWER SYSTEMS CAT	656 E. LA CADENA DR RIVERSIDE, CA 92507
CHECKED T. PINT	DATE 1/8/25		
APPROVED	DATE		
TITLE: OPTIONAL MODULES INPUT & OUTPUT MODULES		SCALE: NONE	JOB: CITY OF REDLANDS–TEXAS BS COUNTRY CLUB, FIFTH, & AGATE PS
			DWG NO. E230557–2

GCCP 1.2 & 1.5

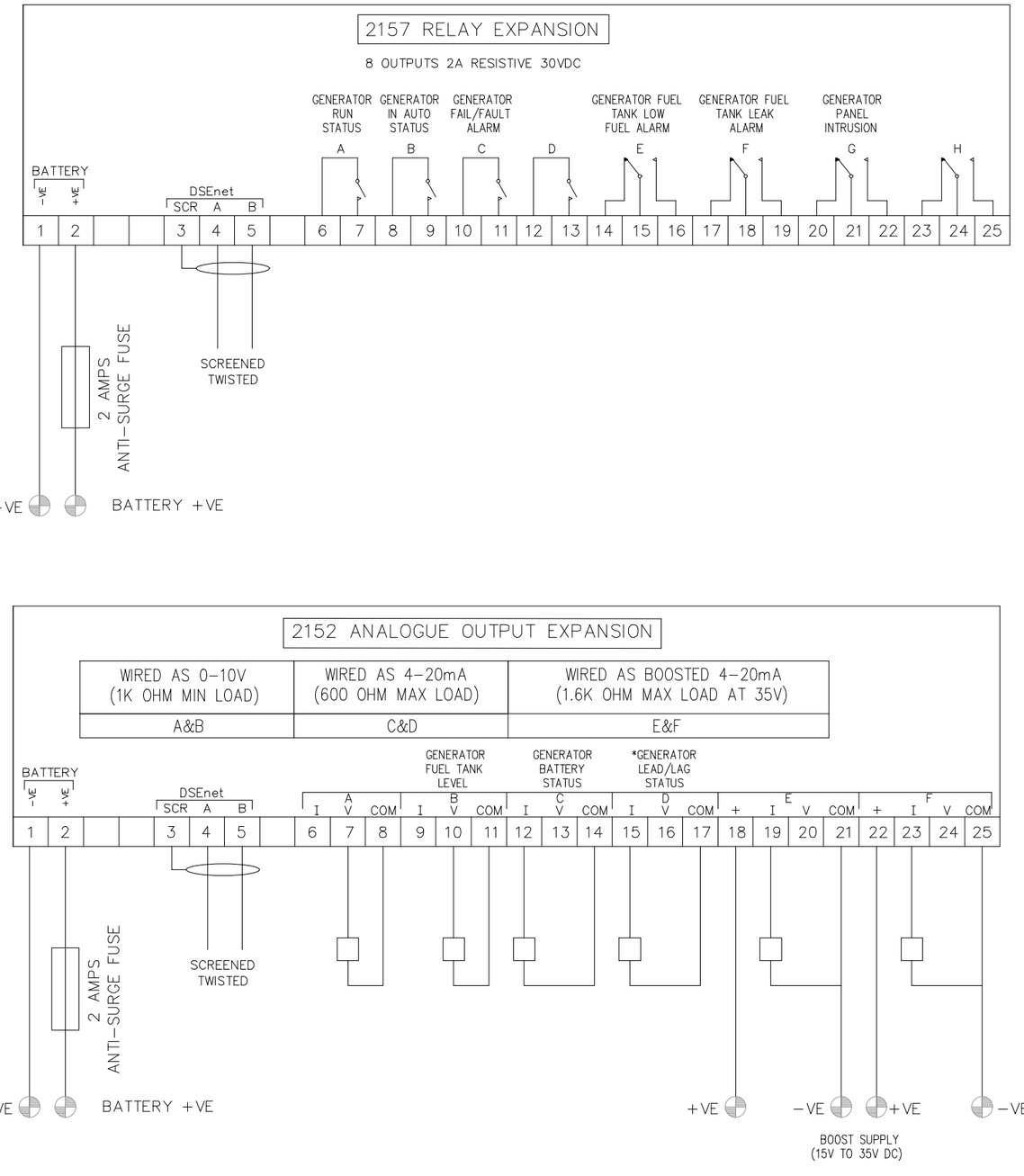

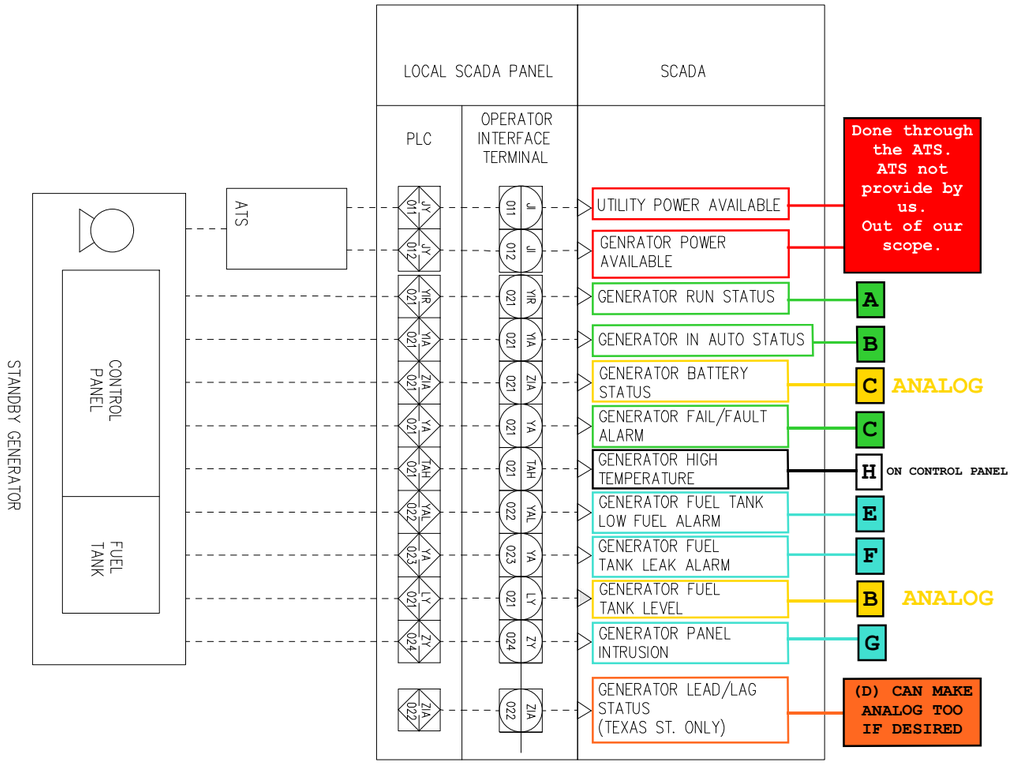

DRAWN D. URIARTE	DATE 5/9/2025	QUINN POWER SYSTEMS CAT	656 E. LA CADENA DR RIVERSIDE, CA 92507
CHECKED	DATE		
APPROVED	DATE		
TITLE: OPTIONAL MODULES INPUT & OUTPUT MODULES CONNECTION ILLUSTRATION	SCALE: NONE	JOB: CITY OF REDLANDS-TEXAS BS COUNTRY CLUB, FIFTH, & AGATE PS	
		DWG NO. N/A	

4.2 SCHEMATIC INTERCONNECTION DIAGRAM

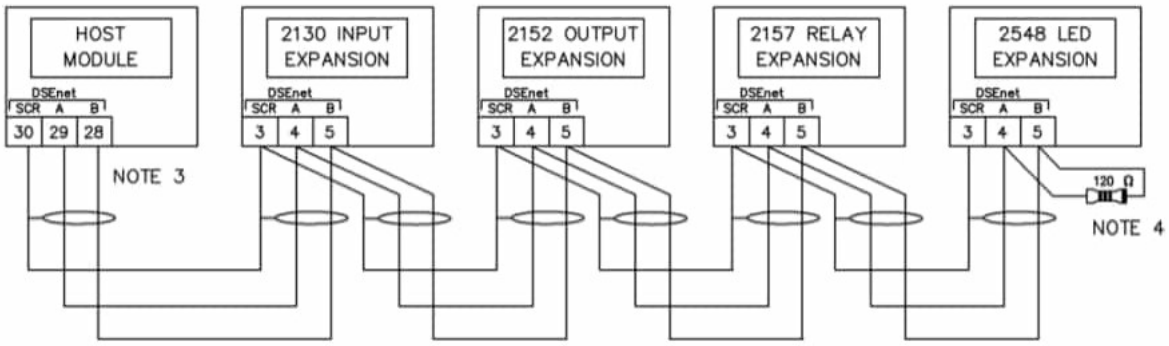

NOTE 3
AS A TERMINATING RESISTOR IS INTERNALLY FITTED TO THE HOST CONTROLLER, THE HOST CONTROLLER MUST BE THE FIRST UNIT ON THE DSEnet

NOTE 4
A 120 OHM TERMINATION RESISTOR MUST BE FITTED TO THE LAST UNIT ON THE DSEnet

4.3 TYPICAL WIRING DIAGRAM FOR ANALOG OUTPUT MODULE

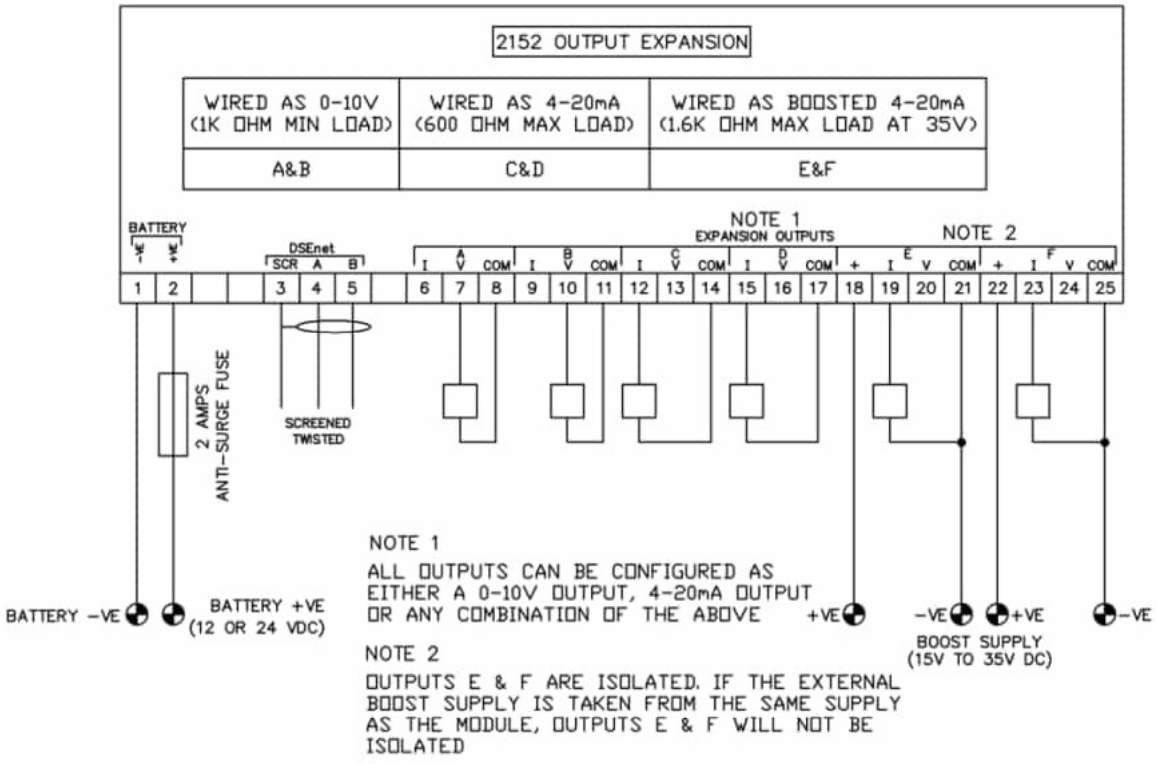

NOTE 1
ALL OUTPUTS CAN BE CONFIGURED AS EITHER A 0-10V OUTPUT, 4-20mA OUTPUT OR ANY COMBINATION OF THE ABOVE

NOTE 2
OUTPUTS E & F ARE ISOLATED. IF THE EXTERNAL BOOST SUPPLY IS TAKEN FROM THE SAME SUPPLY AS THE MODULE, OUTPUTS E & F WILL NOT BE ISOLATED

NOTE : Configuration of the inputs is performed in the host controller.

Extra Instructions discussed and shared for the Modules Wiring:

1. *Generator Engine Temperature High Alarm (TAH) should be a Discrete Output (DO) relay at the Generator Panel to be read as a Discrete Input (DI) signal at the PLC.*
   Setting it up as a DO for the input as a DI to their PLC is not a problem. (The output H shown in the image below is an output straight from the GCCP control panel.)



2. *Generator Battery Status should be an Analog Output (AO) to provide the Battery Voltage to be read as an Analog Input (AI) signal at the PLC.*
   We can do a AO out for battery voltage creating a custom curve with a range of their preference. (I will add it to the Analog Output wiring diagram as an AO out.)



3. *The Texas St. Lead/Lag status should be a DO relay at the Generator Panel to be read as a DI signal at the PLC.*
   The Lead/Lag status looks to be an issue as there is not a configurable DO for that. We can create an Analog output for it if desired. (Unfortunately, we are only able to do an Analog output for Lead/Lag status)

4. *Confirm that the expansion modules will be factory installed by CAT.*
   Installed by a Cat Dealer as Cat does not provide the Analog modules. (We will be sure to have all the modules installed and programmed/wired before delivering to the job site)

5. *Provide wiring diagram for the AO Expansion Module for the Analog Signals (similar to what was provided for the DO module).*
   See attached for expansion Module drawing with both the DO module and Analog expansion module on it. I also added a page from the analog operators manual for more details if needed. If you are good with this, I will add it to the Submittal as well.

David,
I thought that they were talking about Power Factor Lead/Lag. Now I see that they want to know which generator set is lead, first to start at next call to run and which one will wait to start as the lag unit. I've checked outputs on the 1.5 and do not see an output to communicate which unit will start next as the control panel will automatically balance hours between the two units to keep them with fairly equal operating hours. With the Load Demand Scheme we can "start all sets initially" or "start sets as load requires". The panels will keep the units hours in balance as they communicate over the MSC link. I recommend starting all units initially and then letting them shed a unit off depending on load.

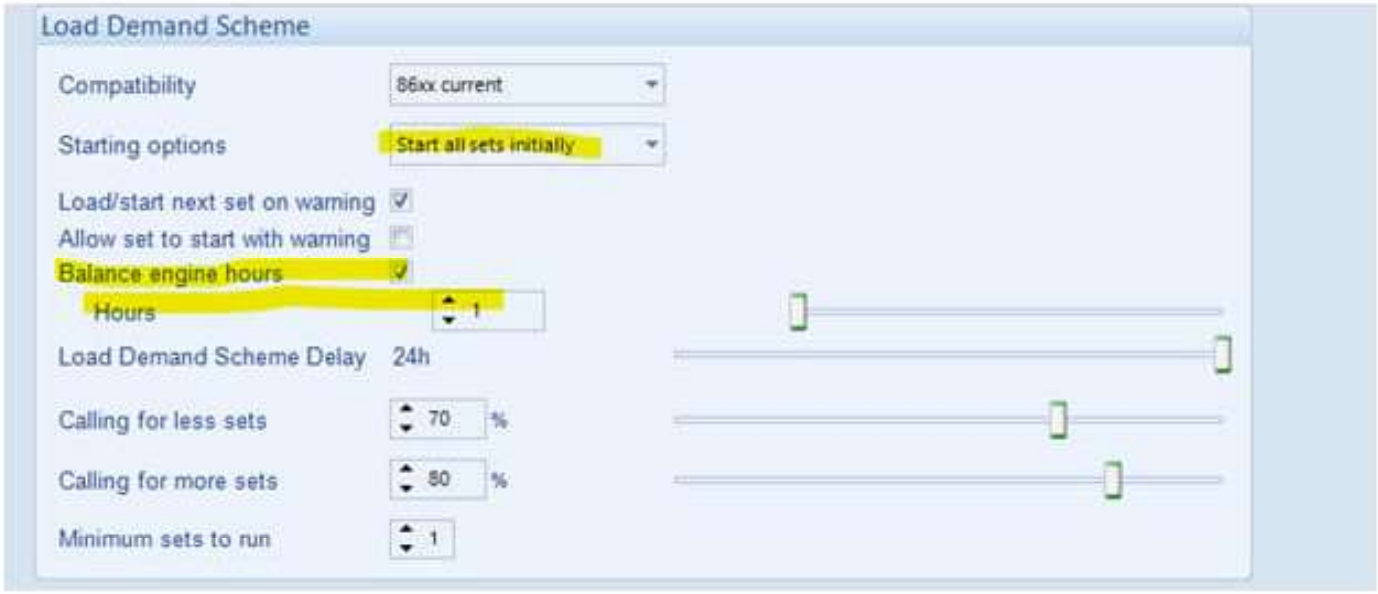

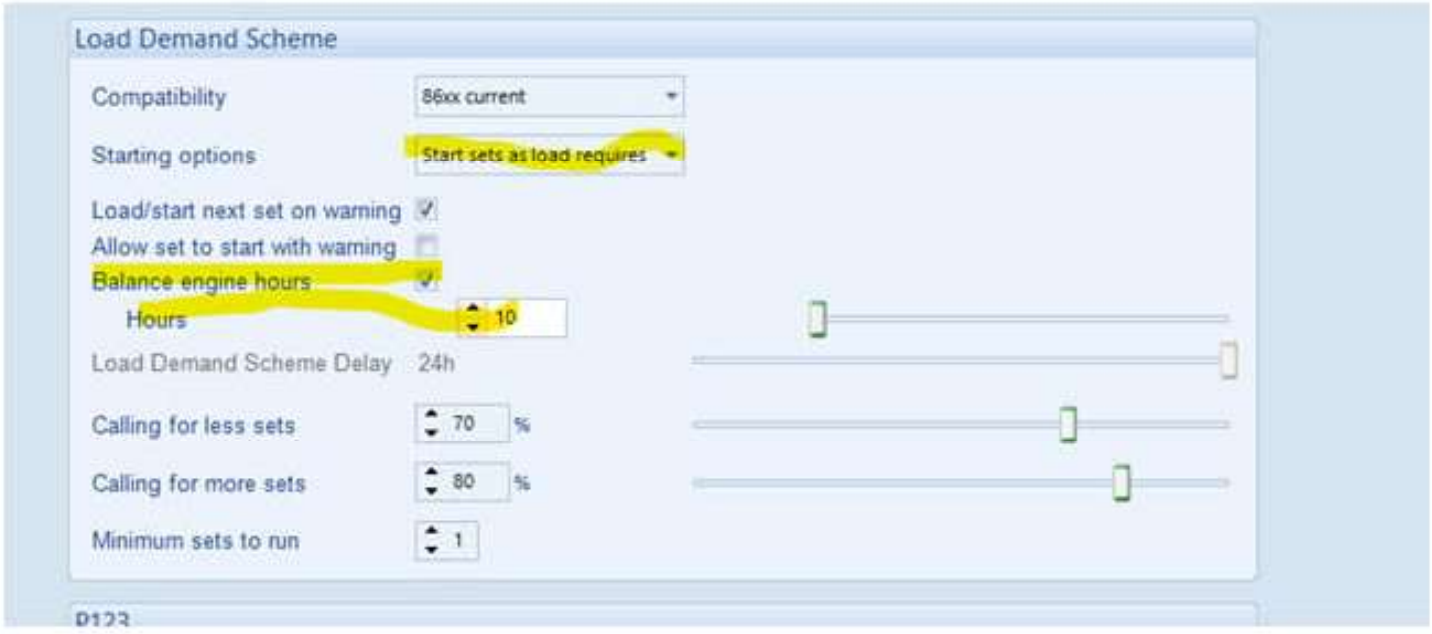

THIS PAGE INTENTIONALLY LEFT BLANK

BRADY
Water • Power • Transportation

SUBMITTAL REVIEW

Date: June 12, 2025

To: City of Redlands **Attention:** Paul Mariscal	**Project Owner:** City of Redlands **Project Name:** City of Redlands Water Facilities Generators
Date Received: June 12, 2025 **Reviewed By:** Ryan Nishimura	**Job No.:** PROJECT 501028 (BRADY)
Item of Equipment or Material: OFE Country Club Generator	**Specification Section / Drawing:** Specification 16622 / Sheet CC-E-2

Submittal No.	Subject of Shop Drawing or Data	No Exceptions Taken	Make Corrections Noted	Submit Specified Items	Revise & Resubmit	Rejected	For Record Only
OFE Submittal-3	OFE Country Club Generator	X					

Comments:

Submittal review is for Owner Furnished Equipment (OFE). Comments are for information only.

1. No exceptions.

Regards,

Ryan Nishimura, PE

Richard Brady & Associates

BRADY
Water • Power • Transportation

Corrections or comments made relative to submittals during this review do not relieve the contractor from compliance with the requirements of the drawings and specifications. This check is only for review of general conformance with the design concept of the project and general compliance with the information given in the contract documents. The contractor is responsible for confirming and correlating all quantities and dimensions; selecting fabrication processes and techniques of construction; coordinating its work with that of other trades, and performing its work in a safe and satisfactory manner.

656 East La Cadena Drive
Riverside CA 92507
Phone: (951) 683-5960 Fax: (951) 788-5112

GENERATOR SET SUBMITTAL FOR APPROVAL

Country Club PS

City Of Redlands
955 Parkford Dr,
Redlands, CA 92374

Project Number: 240171
Stock ID: RE16827

(1) CATERPILLAR MODEL C15 DIESEL GENERATOR SETS, STANDBY RATED, 500KW, 277/480V, 3 PHASE, 60HZ AT 1800 RPM, WITH 330 GALLON INTEGRAL TANK AND SOUND ATTENUATED ENCLOSURE

Project Engineer: David Uriarte
Email: david.uriarte@quinnpower.com
Phone: (951) 774-3244

Bill of Materials

Configuration:

(1) CATERPILLAR MODEL C15 DIESEL GENERATOR SETS, STANDBY RATED, 500KW, 277/480V, 3 PHASE, 60HZ AT 1800 RPM, WITH 330 GALLON INTEGRAL TANK AND SOUND ATTENUATED ENCLOSURE

CAT Standard Features and options

Engine Package Description:

Diesel Engine 15L, EPA TIER 3
Model C15, 6 Cylinder, 4-Cycle, TIER 2
CAT Electronic Governor (ADEM A4)

Starting / Charging System:

24VDC Ststem
Standard Wet Batteries with rack and cables

Control System:

GCCP 1.2 Auto Start Control Panel
Features Include:
- 4-line back-lit LCD text display
- Multiple display languages
- Five-key menu navigation
- LCD alarm indication
- Customizable power-up text and images
- Data logging facility
- Internal PLC editor
- Protections disable feature
- Fully configurable via PC using USB & RS485 communication
- Front panel configuration with PIN protection
- Power save mode
- 3-phase generator sensing and protection
- Generator current and power monitoring (kW, kvar, kVA, pf)
- kW and kvar overload and reverse power alarms
- Over current protection
- Unbalanced load protection
- Breaker control via fascia buttons
- Fuel and start outputs configurable when using CAN Support for 0 V to 10 V & 4 mA to 20 mA sensors
- 8 configurable digital inputs (3 available for Customer use)
- 8 configurable digital outputs (5 available for Customer use)
- 4 configurable analogue/digital inputs (3 available for Customer Use)
- CAN, MPU and alternator frequency speed sensing in one variant
- Real time clock
- Manual and automatic fuel pump control
- Engine pre-heat and post-heat functions
- Engine run-time scheduler
- Engine idle control for starting & stopping
- Fuel usage monitor and low fuel level alarms
- 3 configurable maintenance alarms

Safety Shutoff for:
- High Water Temp
- Overspeed
- Low Oil Pressure
- Low Coolant Level

Cooling System:

Coolant Drain Valve
Blower Fan and Fan Drive with Guards
Thermostats and Housing
Radiator, Package Mount
Jacket Water Pump
CAT Extended Life Coolant

Lube System:

Oil Filler and Dipstick
Oil Filter, Spin on
Lubricating Oil
Oil drain with valve
Shallow Oil Pan

Fuel System:

Primary Fuel Filter with Water Separator
Secondary Fuel Filter
Fuel Cooler
Fuel Priming Pump
Flexible Fuel Lines
Engine Fuel Transfer Pump

Generators:

Brushless, Self-Excited 2/3 Pitch, Random Wound
IP23 Protection
Class H Insulation and Temperature Rise
Terminal Box, Bottom Cable Entry
AVR350 Automatic Voltage Regulator
Neutral Bar

Finish:

All electroplated hardware or stainless steel
Anticorrosive paint protection
High gloss polyurethane paint for durability and scuff resistance

Manuals:

(1) Set Operations & Maintenance Manuals (Electronic Copy)

Tests:

Factory Standard Test @ 0.8 PF

Additional Optional Generator Set Equipment Included in Sale Quotation:

Enclosure and Options:

Sound Attenuated Level 1 Enclosure (White)
125A Load Center
GFCI Receptacle and Wiring
Enclosure Lights
Standard Air Cleaner
Internal Rubber Type Isolators

Fuel Tank:

UL142, Double Walled, 332 Gallon (Usable), Integral Fuel Tank
Fuel Level Switch
Fuel Level Gauge and Alarm
Fuel Tank Fill and Lock Cap

Circuit Breaker:

800A LS/I Manual, 100% Rated, UL Circuit Breaker
Auxiliary Contacts / Shunt Trip

Generator:	
	Alternator LC7034J
	105C Degree Temperature Rise over 40C Degree Ambient
	Permanent Magnet Generator
Control Panel (with Options):	
	Gen Running & Fault Relay
	Dust Proof Control Panel
	Panel Mounted Audible Alarm
	Local Annunciator
	Input Expansion Module
	Output Expansion Module
	ADAM Advantech Modbus Gateway (ADAM-4572)
Cooling System:	
	Pump Style Jacket Water Heater
	Low Coolant Level Shutdown
Battery Charger:	
	Battery Charger, 10A, UL listed
Miscellaneous:	
	PL444 CAT 4G Telematics
	UL 2200 Listed Package Generator Set
	IBC Seismic Certification
	EPA Emissions Certification
	South Coast AQMD Pre-Certified
	(1) Set of Operation & Maintenance Manuals (Electronic Copy)
	Standard 5 Year Factory Warranty
Local Power Systems Services Included:	
	Delivery to Jobsite - ***Off loaded by others***
	Pre-Start up Assistance
	NFPA 110 Startup w/ 4 hour load bank test
	Onsite Training
	One Year Customer Value Agreement
Quinn Power Systems Services NOT Included:	
	South Coast Air Quality Management Permits
	Sales tax
	Offloading/crane service of equipment off delivery truck
	Installation, wiring, piping, plumbing or anchoring of equipment
	Diesel fuel initial or for testing

SCOPE OF WORK

QPS to Supply the following Equipment as described in above Bill of Materials:

QPS will notify City of Redlands of the following:

- Estimated factory ready to ship date upon approval.
- When equipment received in our QPS yard and unit has been inspected.
- When Equipment is unit ready for jobsite delivery
- QPS will schedule carrier and delivery of above equipment to jobsite on single flatbed truck.

City of Redlands will be responsible for the following:

- Offload equipment from truck, via forklift or crane service and set in place.
- Mount, anchor, plumb and wire QPS supplied equipment on site.
- Terminate all electrical wires, exhaust piping and fuel piping from QPS supplied equipment
- Fill out and submit QPS Startup Checklist
- Provide 2 week notice for prospective startup date.

****Startup (if applicable) will not be conducted until the following items have been completed and received by QPS****

1. Startup Checklist
- Complete installation / anchoring
- Confirm wiring termination - including customer shore power for auxiliary equipment
- Confirm fuel is available for testing - must be done before technician's arrival
- Confirm building load available if necessary - NFPA 110
2. Permit to Operate, Authority to Construct, etc.

NOTES, EXCEPTION, CLARIFICATION

Quinn Power Systems is not a general, electrical or installing contractor. Providing equipment and services as described above only.

The equipment offered is CAT standard product provided for review. This quote is based on our understanding of your written specifications listed below:
Specification Section: 16622 Standby Diesel Electric Generators for Purchase by the City of Redlands (Owner), Single Line Diagram E 5.01

Quinn Power Systems is quoting a standard engineered product that complies with the functional intent of your verbal specification. Quinn Power Systems and Caterpillar will make every effort to meet the project delivery schedule requirements. However, do to the ongoing global supply chain disruptions, Quinn Power Systems will not be liable or accept any liquidated damage clause on a purchase order.

Depending on final height of installed generator set, a working platform may be required to access the control panel and maintenance doors. Platforms are not included in this proposal, unless stated above. Call for revised quotation if required.

Included in this quote is one (1), one day/ 8hrs (max) startup/ commissioning, (NFPA110). Additional technician trips to the jobsite due to insufficient site readiness will result in additional cost, at a billable rate of $1200 per day. A change order will be required prior to the scheduling of additional technician site visits.

Startup/Commissioning Services are provided for CAT factory/ QPS supplied equipment only. Scope of work for Startup Services available upon request. Out of Scope services are billed on a Time & Material basis in the field at purchaser's expense. QPS standard labor rates apply. Technician services are provided during normal business hours Monday through Friday.

Exception taken to any NETA 3rd party or independent testing requirements. Any and all testing as listed above to be provided by QPS technicians.

Cat® C15 DIESEL GENERATOR SETS

Standby & Prime: 60Hz



Image shown might not reflect actual configuration

Engine Model	Cat® C15 In-line 6, 4-cycle Diesel
Bore x Stroke	137 mm x 171 mm (5.4 in x 6.8 in)
Displacement	15.2 L (928 in³)
Compression Ratio	16.1:1
Aspiration	Turbocharged Air-to-Air Aftercooled
Fuel Injection System	MEUI
Governor	Electronic ADEM™ A4

Model	Standby	Prime	Emission Strategy
C15	500 ekW, 625 kVA	455 ekW, 569 kVA	TIER II Non-Road

PACKAGE PERFORMANCE

Performance	Standby	Prime
Frequency	60 Hz	
Genset Power Rating	625 kVA	569 kVA
Genset power rating with fan @ 0.8 power factor	500 ekW	455 ekW
Emissions	TIER II Non-Road	
Performance Number	DM8155	DM8154
Fuel Consumption		
100% load with fan, L/hr (gal/hr)	133.9 (35.3)	126.3 (33.3)
75% load with fan, L/hr (gal/hr)	108.0 (28.5)	97.2 (25.6)
50% load with fan, L/hr (gal/hr)	69.7 (18.4)	63.9 (16.8)
25% load with fan, L/hr (gal/hr)	40.9 (10.8)	38.2 (10.0)
Cooling System[1]		
Radiator air flow restriction (system), kPa (in. water)	0.12 (0.48)	0.12 (0.48)
Radiator air flow, m³/min (CFM)	720 (25426)	720 (25426)
Engine coolant capacity, L (gal)	20.8 (5.5)	20.8 (5.5)
Radiator coolant capacity, L (gal)	54 (14)	54 (14)
Total coolant capacity, L (gal)	75 (20)	75 (20)
Inlet Air		
Combustion air inlet flow rate, m³/min (CFM)	38.2 (1349)	38.2 (1349)
Max. Allowable Combustion Air Inlet Temp, °C (°F)	49 (120)	49 (120)
Exhaust System		
Exhaust stack gas temperature, °C (°F)	531 (988)	524 (975)
Exhaust gas flow rate, m³/min (CFM)	109.6 (3870)	101.2 (3573.4)
Exhaust system backpressure (maximum allowable), kPa (in. water)	10.0 (40.0)	10.0 (40.0)
Heat Rejection		
Heat rejection to jacket water, kW (BTU/min)	182 (10375)	172 (9781)
Heat rejection to exhaust (total), kW (BTU/min)	493 (28036)	483 (27467)
Heat rejection to aftercooler, kW (BTU/min)	121 (6881)	120 (6824)
Heat rejection to atmosphere from engine, kW (BTU/min)	91 (5175)	87 (4947)

Alternator[3]											
Duty Cycle		Standby					Prime				
Phase		3-Phase					3-Phase				
Voltages, V		208	220	240	480	600	208	220	240	480	600
Current, Amps		1735	1640	1504	752	601	1579	1493	1368	684	547
Frame: LC6124F Excitation: AREP	Temperature Rise @ 40°C	150	130	130	130	130	125	105	105	105	105
	Motor Starting Capability @ 30% Voltage Dip, skVA	1325	1466	1712	1712	1714	1325	1466	1712	1712	1714
Frame: LC6124G Excitation: AREP	Temperature Rise @ 40°C	130	130	105	105	105	105	105	105	105	105
	Motor Starting Capability @ 30% Voltage Dip, skVA	1335	1479	1729	1729	1731	1335	1479	1729	1729	1731
Frame: LC7024H Excitation: AREP	Temperature Rise @ 40°C					130					105
	Motor Starting Capability @ 30% Voltage Dip, skVA					2023					2023
Frame: LC7034J Excitation: PMG	Temperature Rise @ 40°C	105	105	105	105		80	80	80	80	
	Motor Starting Capability @ 30% Voltage Dip, skVA	1524	1694	1993	1993		1524	1694	1993	1993	
Frame: LC7024F Excitation: AREP	Temperature Rise @ 40°C	130	105	105			105	105	80		
	Motor Starting Capability @ 30% Voltage Dip, skVA	1248	1387	1633			1248	1387	1633		
Frame: LC6114F Excitation: SE	Temperature Rise @ 40°C	150	130	130	130		125	105	105	105	
	Motor Starting Capability @ 30% Voltage Dip, skVA	1104	1222	1428	1428		1104	1222	1428	1428	
Frame: LC6114G Excitation: SE	Temperature Rise @ 40°C	130	130	105	105		105	105	105	105	
	Motor Starting Capability @ 30% Voltage Dip, skVA	1116	1236	1445	1445		1116	1236	1445	1445	

WEIGHTS & DIMENSIONS

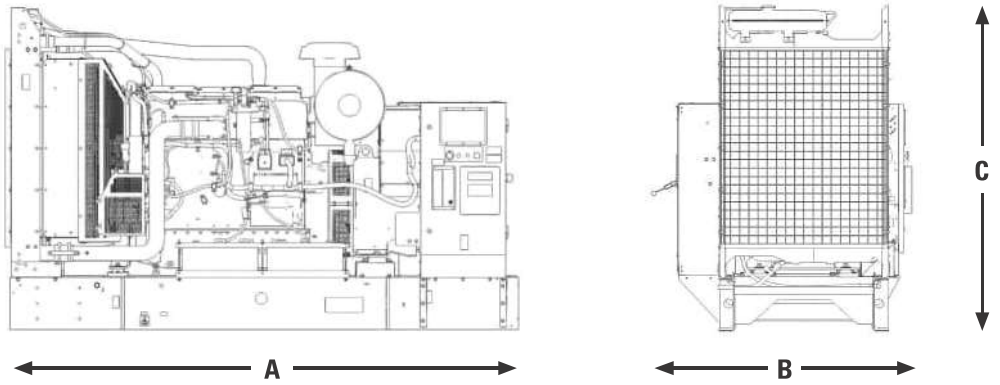

Dim "A" mm (in)	Dim "B" mm	Reference Mechanical Drawings	m "C" mm (in)	Dry Weight kg (lb)
3476 (137)	1628 (64)		2128 (84)	4365 (9623)

Note: General configuration not to be used for installation. See general dimension drawings for detail.

APPLICABLE CODES AND STANDARDS:

CSA C22.2 No 100-04, UL142, UL489, UL869, cUL/UL2200, NFPA 37, NFPA 70, NFPA 99,NFPA 110, IBC, IEC60034-1, ISO 3046, ISO 8528, NEMA MG 1-33.

Note: Codes may not be available in all model configurations. Please consult your local Cat Dealer representative for availability.

STANDBY: Output available with varying load for the duration of the interruption of the normal source power. Average power output is 70% of the standby power rating. Typical operation is 200 hours per year, with maximum expected usage of 500 hours per year.

PRIME: Output available with varying load for an unlimited time. Average power output is 70% of the prime power rating. Typical peak demand is 100% of prime rated ekW with 10% overload capability for emergency use for a maximum of 1 hour in 12. Overload operation cannot exceed 25 hours per year.

RATINGS: Ratings are based on SAE J1349 standard conditions. These ratings also apply at ISO3046 standard conditions.

DEFINITIONS AND CONDITIONS

[1] For ambient and altitude capabilities consult your Cat dealer. Air flow restriction (system) is added to existing restriction from factory.

[3] UL 2200 Listed packages may have oversized generators with a different temperature rise and motor starting characteristics. Generator temperature rise is based on a 40° C ambient per NEMA MG1-32.

LET'S DO THE WORK.™

www.cat.com/electricpower
© 2024 Caterpillar. All Rights Reserved.
Materials and specifications are subject to change without notice. The International System of Units (SI) is used in this publication.
CAT, CATERPILLAR, LET'S DO THE WORK, their respective logos, "Caterpillar Corporate Yellow", the "Power Edge" and Cat "Modern Hex" trade dress as well as corporate and product identity used herein, are trademarks of Caterpillar and may not be used without permission.

LEHE1577-04 (10/24)

Enclosures



Picture shown may not reflect actual configuration

C13/C15/C18
SOUND ATTENUATED ENCLOSURES

US Sourced
Diesel Generator Set
350 - 750 ekW 60 Hz

Features

Robust/Highly Corrosion Resistant Construction

- Factory installed on skid base
- Environmentally friendly, polyester powder baked paint
- 14 gauge steel
- Interior zinc plated fasteners
- Exterior stainless steel fasteners
- Internally mounted exhaust silencing system
- Designed and tested to comply with UL 2200 Listed generator set package
- Compression door latches providing solid door seal

Excellent Access

- Large cable entry area for installation ease
- Accommodates side mounted single or multiple breakers
- Three doors on both sides
- Vertically hinged allow 180° opening rotation and retention with door stays
- Lube oil and coolant drains piped to the exterior of the enclosure base
- Radiator fill cover

Security and Safety

- Lockable access doors which give full access to control panel and breaker
- Cooling fan and battery charging alternator fully guarded
- Fuel fill, oil fill and battery can only be reached via lockable access
- Externally mounted emergency stop button
- Designed for spreader bar lifting to ensure safety
- Stub-up area is rodent proof

Transportability

These enclosures are of extremely rugged construction to withstand outdoor exposure and rough handling common on many construction sites.

Options

- Enclosure constructed with 14 gauge steel
- Enclosure constructed with 12 gauge aluminum (5052 grade)
- Caterpillar yellow and white paint
- Control panel viewing window#
- UL Listed integral fuel tank with 670, 400, and 300 gallon capacities
- UL Listed sub base fuel tank with 660, 1000, 1800, and 2200 gallon capacities.
- Seismic certification per applicable building codes: IBC 2000, IBC 2003, IBC 2006, IBC 2009, IBC 2012, IBC 2015 CBC 2007, CBC 2010
- IBC Certification for 150 mph wind loading
- AC/DC lighting package
- 5 kW Canopy space heater to facilitate compliance with NFPA 110
- Motorized louvers and gravity discharge damper
- 125A Load Center
- GFCI outlets

Not available with aluminum enclosures.

Level 1 Sound Attenuated Enclosure (Steel) Sound Levels

Model	Standby eKW	Cooling Air Flow Rate		Ambient Capability*		Sound Pressure Levels (dBA) at 7m (23 ft)
		m³/s	cfm	°C	°F	100% Load
C13	350	8.5	18010	57	135	74
	400	8.5	18010	56	133	75
C15	350	10.4	22072	59	138	73
	400	10.4	22072	51	124	73
	450	10.4	22072	46	115	74
	500	12.5	26415	48	118	75
C18	550	8.1	17234	45	113	75
	600	8.1	17234	43	109	75
	650	12.7	26909	51	123	75
	700	12.7	26909	48	118	75
	750	12.7	26909	48	118	75

Sound Attenuated Enclosure (Aluminum) Sound Levels

Model	Standby eKW	Cooling Air Flow Rate		Ambient Capability*		Sound Pressure Levels (dBA) at 7m (23 ft)
		m³/s	cfm	°C	°F	100% Load
C13	350	8.5	-	57	135	75
	400	8.5	-	56	133	75
C15	350	10.4	22072	59	138	72
	400	10.4	22072	51	124	73
	450	10.4	22072	46	115	74
	500	12.5	26415	48	118	75
C18	550	8.1	17234	45	113	76
	600	8.1	17234	43	109	76
	650	12.7	26909	51	123	76
	700	12.7	26909	48	118	76
	750	12.7	26909	48	118	76



C13 / C15 / C18 Integral and Sub-Base Fuel Tanks

US Sourced
Diesel Generator Set
350 – 750 ekW 60 Hz

Picture shown may not represent actual package.

Features

- UL Listed for United States (UL 142) and Canada (CAN/ULC S601)
- Facilitates compliance with NFPA 30 code, NFPA 37 and 110 standards and CSA C282 code
- Dual wall
- Lockable fuel fill cap, 4” (101.6 mm) NPT
- Low fuel level warning standard, customer configurable warning or shutdown
- Primary tank leak detection switch in containment basin
- Tank design provides capacity for thermal expansion of fuel
- Fuel supply dip tube is positioned so as not to pick up fuel sediment
- Fuel return and supply dip tube is separated by an internal baffle to prevent immediate re-supply of heated return fuel
- Pressure washed with an iron phosphate solution
- Interior tank surfaces coated with a solvent-based thin-film rust preventative
- Heavy gauge steel gussets with internal lifting rings
- Primary and secondary tanks are leak tested at 20.7 kPa (3 psi) minimum
- Compatible with open packages and enclosures
- Gloss black polyester alkyd enamel exterior paint
- Welded steel containment basin (minimum of 110% of primary tank capacity)
- Direct reading fuel gauge with variable electrical output
- Emergency vents on primary and secondary tanks are sized in accordance with NFPA 30

Sub-Base

- The Sub-Base fuel tank mounts below the generator set wide base

Integral

- Integral diesel fuel tank is incorporated into the generator set base frame
- Robust base design includes linear vibration isolators between tank base and engine generator

Options

- Audio/visual fuel level alarm panel
- 5 gal (18.9 L) spill containment
- 5 gal (18.9 L) spill containment with fuel fill drop tube with in 6” (152 mm) from bottom of tank
- 5 gal (18.9 L) spill containment with overfill prevention valve and fuel fill drop tube with in 6” (152 mm) from bottom of tank
- ULC Listed 7.5 gal (28.4 L) spill containment with vent extensions, vent whistle, and drop tube facilitating compliance with CSA B139-09
- ULC Listed 7.5 gal (28.4 L) spill containment with overfill prevention valve, vent extensions, vent whistle and drop tube facilitating compliance with CSA B139-09

Integral & Sub-Base Fuel Tank Base Useable Capacities with Fuel Tank Dimensions & Weights

Integral - Width(W) 2014 mm (79.3 in)
Sub-base - Width(W) 2056 mm (81 in)
Integral* - Width(W) 2315 mm (91.2 in)
Sub-base*-Width(W) 2357 mm (92.7in)

Reference Mechanical Drawings

Sound Attenuated Enclosure

C13 Tank Design	Feature Code	Total Capacity		Useable Capacity		Tank Only						Overall Package Height with Tank			
						Dry Weight		Height 'H'		Length 'L'		Open		Enclosure	
		Liter	Gallon	Liter	Gallon	kg	lb	mm	in	mm	in	mm	in	mm	in
Integral	FTDW013	2646	699	2540	671	1569	3450	762	30.0	5461	215.0	NA	NA	2743	108.0
Sub-Base	FTDW005 / FTDW016	3941	1041	3876	1024	1659	3657	635	25.0	5550	218.5	NA	NA	2955	116.3
Sub-Base	FTDW006	6980	1844	6818	1801	2033	4483	889	35.0	6184	243.5	NA	NA	3209	126.3
Sub-Base	FTDW007	8339	2203	8244	2178	2292	5052	889	35.0	7074	278.5	NA	NA	3209	126.3
Sub-Base	FTDW011	2476	654	2435	643	1468	3236	635	25.0	3810	150.0	NA	NA	2955	116.3

C15 Tank Design	Feature Code	Total Capacity		Useable Capacity		Tank Only						Overall Package Height with Tank			
						Dry Weight		Height 'H'		Length 'L'		Open		Enclosure	
		Liter	Gallon	Liter	Gallon	kg	lb	mm	in	mm	in	mm	in	mm	in
Integral	FTDW001	1283	339	1262	333	1015	2237	639	25.0	4746	186.9	NA	NA	2619	103.0
Sub-Base	FTDW005 / FTDW016	3941	1041	3876	1024	1659	3657	635	25.0	5550	218.5	NA	NA	2955	116.3
Sub-Base	FTDW006	6980	1844	6818	1801	2228	4912	889	35.0	6184	243.5	NA	NA	3209	126.3
Sub-Base	FTDW011	2476	654	2435	643	1468	3236	635	25.0	3810	150.0	NA	NA	2955	116.3
Sub-Base	FTDW034	10887	2876	9899	2615	2847	6277	914	36	7747	305	NA	NA	3233	127.3

C18 Tank Design	Feature Code	Total Capacity		Useable Capacity		Tank Only						Overall Package Height with Tank			
						Dry Weight		Height 'H'		Length 'L'		Open		Enclosure	
		Liter	Gallon	Liter	Gallon	kg	lb	mm	in	mm	in	mm	in	mm	in
Integral	FTDW003	1446	382	1422	376	1015	2237	635	25.0	3814	150.1	NA	NA	2560	100.8
Integral*	FTDW030	2498	660	2381	629	1681	3703	762	30.0	4995	196.6	2670	105	2675	105.3
Integral*	FTDW031	5175	1367	4997	1320	2046	4510	762	30.0	6737	265.3	NA	NA	2675	105.3
Sub-Base	FTDW005 / FTDW016	3941	1041	3876	1024	1659	3657	635	25.0	5550	218.5	NA	NA	2905	114.3
Sub-Base	FTDW007	8339	2203	8244	2178	2150	4134	889	35.0	7074	278.5	NA	NA	3209	126.3
Sub-Base	FTDW011	2476	654	2435	643	1468	3236	635	25.0	3810	150.0	NA	NA	2905	114.3
Sub-Base*	FTDW032	10228	2702	9994	2640	2638	5816	889	35.0	7368	290	NA	NA	3132	123.3

*For Ratings 650, 700 &750 ekW only

Tanks with full electrical stub-up area include removable end channel. Tanks with RH stub-up include stub- up area directly below the circuit breaker or power terminal strips. Dimensions include weather-protective enclosure exhaust system.

Dual wall sub-base tanks are UL Listed and constructed in accordance with UL Standard for Safety UL 142, Steel Aboveground Tanks for Flammable and Combustible Liquids and Canada CAN/ULC S601, Standard for Shop Fabricated Steel Aboveground Horizontal Tanks for Flammable and Combustible Liquids.

Fuel tanks and applicable options facilitate compliance with the following United States NFPA Code and Standards:

NFPA 30: Flammable and Combustible Liquids Code
NFPA 37: Standard for the Installation and Use of Stationary Combustion Engines and Gas Turbines
NFPA 110: Standard for Emergency and Standby Power Systems

Fuel tanks and applicable options facilitate compliance with the following Canadian Standard and Code:
CSA C282 – Emergency Electrical Power Supply for Buildings
CSA B139-09 - Installation Code for Oil-Burning Equipment

The following sub-base fuel tanks meet Chicago code for containment and labelling:

FTDW005
FTDW008
FTDW011

©2021 Caterpillar
All rights reserved.
Materials and specifications are subject to change without notice.
The International System of Units (SI) is used in this publication.
CAT, CATERPILLAR, LET'S DO THE WORK, their respective logos, "Caterpillar Corporate Yellow" the "Power Edge" and Cat "Modern Hex" trade dress as well as corporate and product identity used herein, are trademarks of Caterpillar and may not be used without permission.

FUEL LEVEL ALARMS - FSS



CRITICAL LOW FUEL LEVEL SHUTDOWN AND LOW FUEL LEVEL ALARM

These options provide an alarm on low fuel level and a shutdown on critical low fuel level. This warning is reported by an indicator light on the control panel with an audible alarm also available as an option. This warning can additionally be relayed to a remote annunciator.

Note: Standard Fuel Fill, UL Rated Emergency-vent, Standard vent, Fuel Sender & Leak Detection Probe are included as standard on generator sets fitted with UL Listed fuel tanks.

CRITICAL HIGH FUEL LEVEL ALARM

This option provides an alarm on critical high fuel level. This warning is reported by an indicator light on the control panel with an audible alarm also available as an option. This warning can additionally be relayed to a remote annunciator.

Information contained in this publication may be considered confidential. Discretion is recommended when distributing.
Materials and specifications are subject to change without notice.

CAT, CATERPILLAR, LET'S DO THE WORK, their respective logos, "Caterpillar Corporate Yellow," the "Power Edge" and Cat "Modern Hex" trade dress as well as corporate and product identity used herein, are trademarks of Caterpillar and may not be used without permission.



Image shown may not reflect actual configuration

Fuel Level Gauge and Sender

The unit consists of a magnetically driven dial for direct reading with a snap fi t Hall Effect Module attached to the lens. This module sends an electrical signal to a remote fuel level monitor.

The module can provide ratiometric voltage output proportional to the liquid volume inside the tank.

Features

- A magnetic drive allows a signal from the float mechanism inside the tank to be transmitted through a solid bulkhead.
- The dial is designed to allow a second magnetic coupling. This is a coupling from the pointer magnet, through the sealed lens and into the Hall Effect Module.
- The magnetic connection of the Hall Effect sensor is more reliable than systems that depend on the sliding contact of variable resistor devices.
- Hall Effect is a solid state technology with no moving contacts. It counts on the fact that a magnet bends the path of electrons moving through a semiconductor. The bending of the electrons can be detected and converted into an electrical signal.
- The dial is able to provide an electrical output which can be utilized for remote monitoring of tank levels.
- The dial case is hermetically sealed by ultrasonic welding to melt and fuse the case into one solid piece. This keeps weather out, ensuring “no-fog” read ability while greatly extending mechanical life.
- The seal is a high reliability, no-gasket design.
- The plastic case is far more resistant to corrosion than any metal-cased version and is capable of withstanding broad variations in temperature. The lens and case are a special, UV stabilized plastic material.

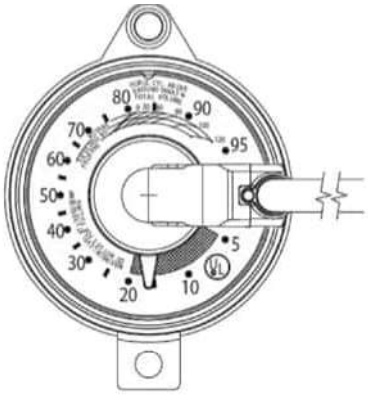

Remote-ready Dial, with Hall Effect Module

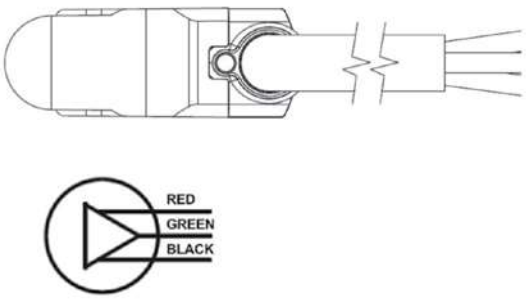

Hall Effect Module

Engine Controller



ADEM™ A4 Engine Controller

The ADEM™ A4 is the main Electronic Control Module (ECM) used on select diesel engines. The ADEM A4 provides a higher degree of control over a large number of combustion variables. The ADEM A4 is designed to control/interface Electronic Unit Injector (EUI) equipped engines. The ADEM A4 engine system is composed of the ADEM A4 ECM, control software, sensors, actuators, fuel injectors, and interface to the generator system. The prime benefit of an ADEM A4 engine system is to better control and maintain the particulate emissions, both steady state and transient, while improving engine performance.

Features

Reliable, Durable

All ADEM A4 controllers are designed to survive the harshest environments.

- Environmentally sealed, die-cast aluminum housing solates and protects electronic components from moisture and dirt contamination
- Rigorous vibration testing ensures product reliability and durability
- Accuracy maintained from –40°C to 85°C
- Electrical noise immunity to 100 volts / meter
- Internal circuits are designed to withstand shorts to + battery and – battery

Simple Servicing

Each ADEM A4 system works in combination with the Cat® ET service tool software to keep the engine operating at peak performance.

- Displays measured parameters
- Retrieves active and logged event code documenting abnormal system operation
- Performs calibrations and diagnostic tests
- Supports flash programming of new software into the ADEM A4 ECM

Self Diagnostics

Each ADEM A4 ECM has a full compliment of diagnostics. The ECM can detect faults in the electrical system and report those faults to the service technician for quick repair.

- Self-diagnostic capability pinpoints operational prob-lems in need of attention.

Advanced Features

- Enhanced performance from fuel injection timing and limiting
- Adjustable monitoring of vital engine parameters
- Programmable speed acceleration ramp rate
- Data link interfaces

Description

The ECM is housed in an environmentally sealed cast-ing. All wiring connections to the ECM are made using two sealed connectors: a single seventy-pin connector and a single one hundred twenty-pin connector.

Engine Speed Governing

Desired engine speed is calculated by the ECM and held within ±0.2 Hz for isochronous and droop mode. The ECM accounts for droop that is requested. The proper amount of fuel is sent to the injectors due to these calculations. The ECM also employs cooldown/shutdown strategies, acceleration delays on startup, acceleration ramp times and speed reference.

Fuel Limiting

Warm and cold fuel-air ratio control limits are con-trolled by the ECM. Electronic monitoring system derates, torque limit, and cranking limit, programmable torque scaling, and cold cylinder cutout mode are standard features.

Fuel Injection Timing

Master timing for injection is controlled by the ECM control. Temperature dependencies are accounted for in the fuel injection calculations.

Electronic Monitoring

Electronic monitoring of vital engine parameters can be programmed. Warning, derate, and shutdown event conditions may be customized by the user.

Information Management

The ECM stores information to assist with electronic troubleshooting. Active and logged diagnostic codes, active events, logged events, fuel consumption, engine hours, and instantaneous totals aid service technicians when diagnosing electronic faults and scheduling preventive maintenance.

Calibrations

Engine performance is optimized through injection timing. Auto/manual sensor calibrations are standard features.

On-Board System Tests

System tests are available to assist in electronic trou-bleshooting. These tests include: injector activation, injector cutout, and override of control outputs.

Data Link Interfaces

The ADEM A4 communicates with the EMCP via a dedicated communication network.

Electronic Sensing

The following sensing is available on the ADEM A4: oil pressure, fuel pressure, fuel temperature, atmospheric pressure, air inlet temperature, turbo outlet pressure, engine coolant temperature, engine speed, throttle, position, exhaust temperature, oil filter pressure differential, fuel filter pressure differential, air filter pressure differential and crankcase pressure.

Engine Controller

SPECIFICATIONS

Impervious to:

Salt spray, fuel, oil and oil additives, coolant, spray cleaners, chlorinated solvents, hydrogen sulfide and methane gas, and dust.

Input and output protection

All inputs and outputs are protected against short circuits to +battery and –battery

Input voltage range (24 VDC nominal)

18 to 32 VDC

Mounting

Engine mounted

Reverse polarity protected

Shock, withstands 20g

Temperature range

Operating: –40°C to 85°C (–40°F to 185°F)
Storage: –50°C to 120°C (–58°F to 248°F)

Vibration

Withstands 8.0g @ 24 to 2 kHz

Information contained in this publication may be considered confidential. Discretion is recommended when distributing. Materials and specifications are subject to change without notice.

CAT, CATERPILLAR, LET'S DO THE WORK, their respective logos, "Caterpillar Yellow," the "Power Edge" and Cat "Modern Hex" trade dress as well as corporate and product identity used herein, are trademarks of Caterpillar and may not be used without permission.

©2019 Caterpillar
All rights reserved.

ADAM-4572

1-port Modbus Gateway



RoHS COMPLIANT 2011/65/EU CE FCC

Features

- Supports 10/100 Mbps communication speeds
- Allows up to 8 clients to access field data simultaneously
- Supports popular HMI software with Modbus/TCP driver or OPC server
- Up to 3 Independent serial ports capacity if configured to RS-485 serial mode
- Provides auto-searching device ID Windows utility
- Surge protection for RS-485 and power line
- Automatic RS-485 data flow control
- Easy mounting on DIN-rail or panel
- Supports Modbus/ASCII, RTU Protocol to control devices

Specifications

Ethernet Communications

- **Compatibility** IEEE 802.3, IEEE 802.3u
- **Speed** 10/100 Mbps
- **Port Connector** 8-pin RJ45

Serial Communications

- **Port Type** RS-232/422/485
- **No. of Ports** 1
- **Port Connector** Plug-in terminal block
- **Data Bits** 7, 8
- **Stop Bits** 1, 2
- **Parity** None, Odd, Even, Mark, Space
- **Baud Rate** 50 bps ~ 921.6 kbps
- **Data Signals** RS-232: TxD, RxD, GND
  RS-422: TxD+, TxD-, RxD+, RxD-, GND
  RS-485: Data+, Data-, GND
- **• Protection** 15 KV ESD protection for all signals

Software

- **OS Support** 32-bit/64-bit Windows XP/Vista/7/8, Windows Server 2003/2008/2008 R2/2012, Windows CE 5.0, and Linux
- **Utility Software** Advantech EKI Device Configuration Utility
- **Operation Mode** Modbus/RTU master/slave mode, Modbus/ASCII master/slave mode

Mechanics

- **Dimensions (H x W x D)** 70 x 130 x 30 mm
- **Enclosure** ABS+PC with solid mounting hardware
- **Mounting** DIN-rail, stack, wall

General

- **Certifications** CE, FCC Part 15 Subpart B (Class A)
- **LED Indicators** System: Power, System Status
  LAN: Speed, Link/Active
  Serial: Tx, Rx

Power Requirement

- **Power Input** 10 ~ 30 V_{DC}
- **Power Consumption** 2.5W

Environment

- **Operating Temperature** -10 ~ 60°C (14 ~ 140°F)
- **Storing Temperature** -20 ~ 80° C (-4 ~ 176° F)
- **Operating Humidity** 5 ~ 95% RH

Ordering Information

- **ADAM-4572** 1-port Modbus Gateway

Dimensions

Unit: [mm]

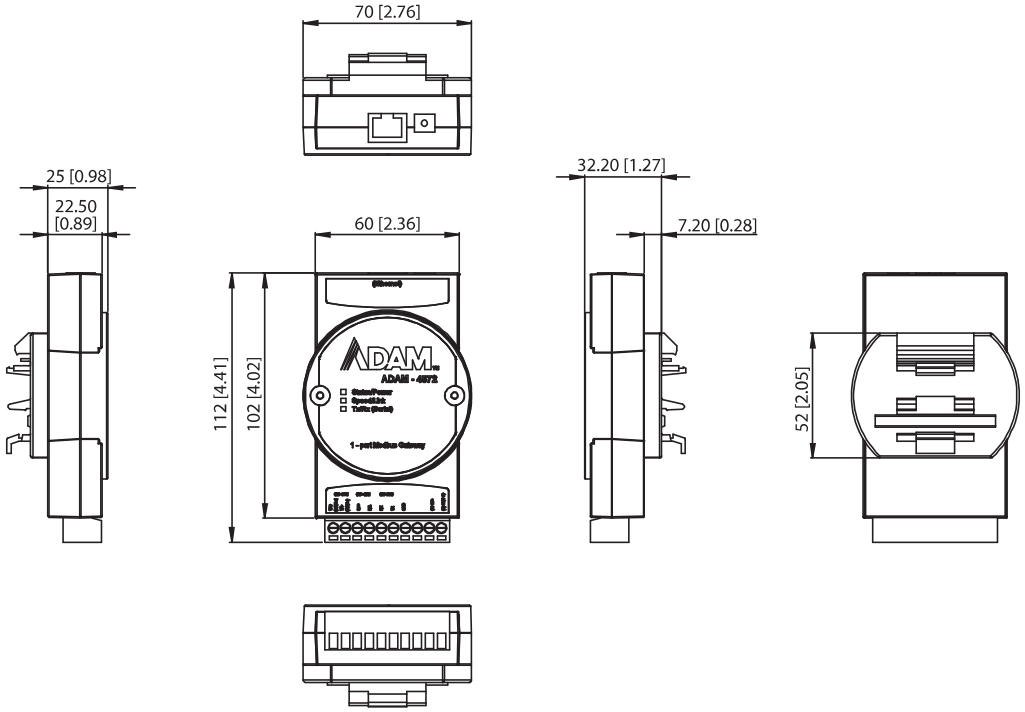

Panel Cut-out Dimensions: 70 x 102 x 25 mm (2.76" x 4.02" x 0.98)

Automatic Voltage Regulator

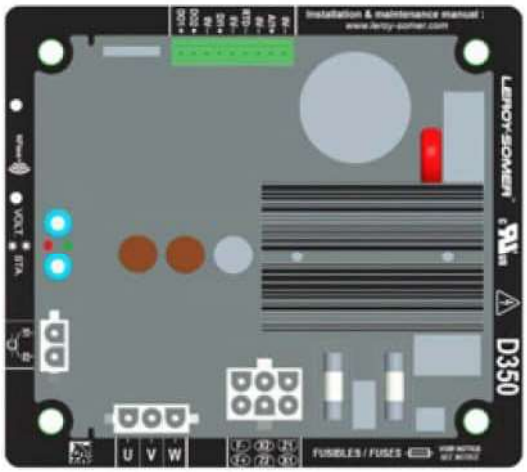

D350AVR

The D350, Digital Voltage Regulator is used to regulate alternators with a field current of less than 5 A in continuous operations, and 10 A maximum in the event of short-circuit for 10 seconds maximum.

Its design is in accordance with mounting in a generator terminal box or a control cabinet. It is required, at a minimum, to follow the local protection and safety standards, especially those specific to electrical installations for voltages of 300 VAC phase-to-neutral maximum.

NFLink™ configuration module

The D350 is equipped with NFC technology for communication and configuration purposes. The configuration module is placed over the two dedicated positioning holes on the plastic enclosure as shown below. Once the configuration is done, the NF Link must be removed as it is not supposed to be left on the D350 when it is in continuous operation.

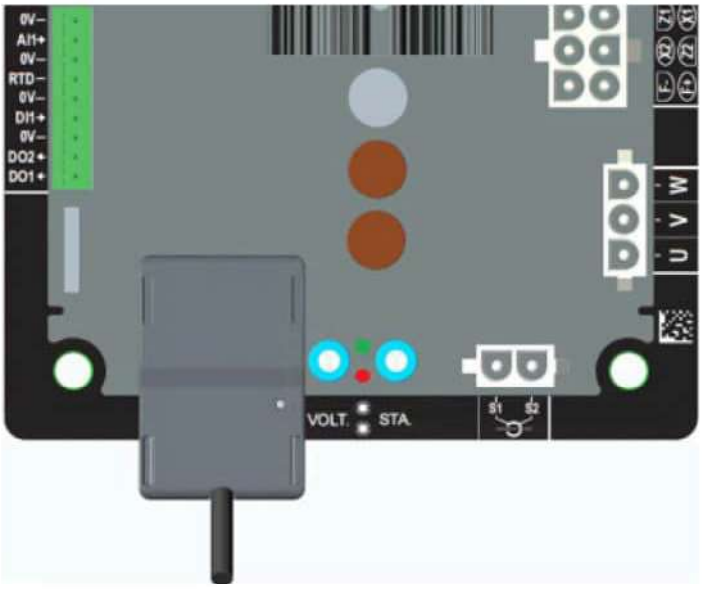

Technical Characteristics

D350 regulator can be used to perform the following functions:

Voltage regulation

- With or without reactive droop compensation (Reactive droop to allow parallel operation)
- With or without line droop compensation

Regulation of the field current, or manual mode, which allows direct control of the field current.

The D350 can also be used to:

- Adjust the reference for the regulation mode in progress, using an analogue input (0 – 10V and potentiometer)
- Monitoring of temperature sensor (Pt100 or CTP)
- Limit the minimum field current delivered to the exciter field
- Monitoring of the maximum stator current limit
- Loss of voltage sensing
- Withstand a sudden short-circuit for 10 seconds maximum in AREP, PMG
- Signals monitoring (events logger)
- 2 digital outputs for various trip, regulation mode and measurement data

Alternator voltage sensing:

- 3 phases without neutral, 2 phases or 1 phase with neutral
- Three-phase range 0 – 530 VAC
- Consumption < 2 VA

Stator current measurement with CT:

- Range 0 –1A or 0 – 5A
- Consumption < 2 VA

Power supply:

- 4 terminals for PMG, AREP, SHUNT
- Range 50 – 277 VAC
- Consumption max < 3000 VA

Field excitation:

- Rated 0 – 5A
- Short-circuit 10A max

Frequency:

- Range 10-100 Hz
- Regulation accuracy: +/-0.25% of the average of the three phases on a linear load, with harmonic distortion less than 5%
- Voltage adjustment range: 0 to 150% of the rated voltage
- Quadrature droop adjustment range: -20% to 20%
- Under frequency protection: integrated, adjustable threshold, slope adjustable from 0.5 to 3V/Hz in steps of 0.1 V/Hz
- Excitation ceiling: adjustable by configuration at 3 points
- Environment: ambient temperature from -40°C to +65°C, relative humidity of less than 95% non-condensing, mounted in a cabinet or in a terminal box

Easy Reg Advanced:

- All the D350 settings are entered/configured using the "EasyReg Advanced" software
- This program is only compatible with computers running WINDOWS® versions Windows 7 and Windows 10 operating systems

Dimensions:

- Height: 52.9 mm
- Width: 125 mm
- Length: 140 mm

Mounting:

- Holes spacing on the Length: 115 mm
- Holes spacing on the width: 100 mm

Weight:

- 0.45 kg

Conformity to standards:

- EMC: IEC 61000-6-2, IEC 61000-6-4
- Humidity: IEC 60068-1 and test in accordance with IEC 60068-2-14
- Dry heat: IEC 60068-2-2
- Damp heat: IEC 60028-2-30
- Cold: IEC 600068-2-1

D350 AVR and NFLink™ Dimensions



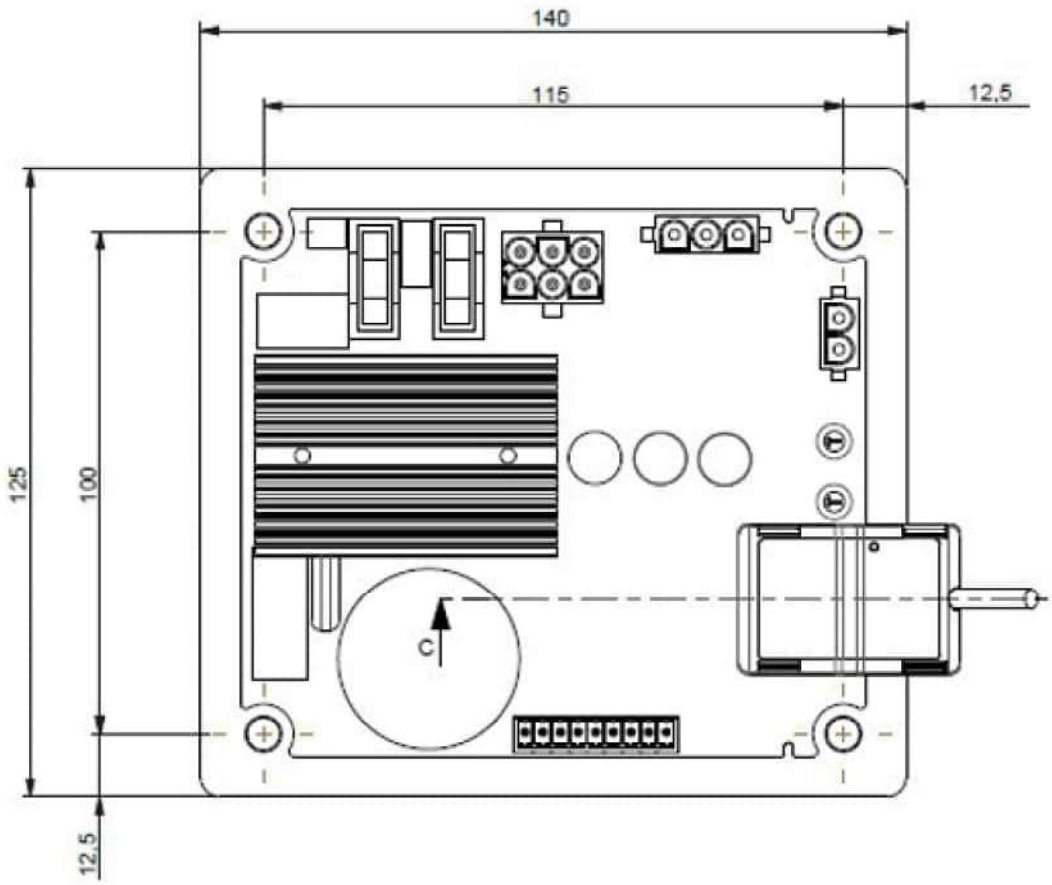

LET'S DO THE WORK.™

www.cat.com/electricpower
©2023 Caterpillar
All rights reserved.
Materials and specifications are subject to change without notice.
The International System of Units (SI) is used in this publication. CAT, CATERPILLAR, LET'S DO THE WORK, their respective logos, "Caterpillar Corporate Yellow", the "Power Edge" and Cat "Modern Hex" trade dress as well as corporate and product identity used herein, are trademarks of Caterpillar and may not be used without permission.

General and Functional Specifications*

- Conformity: ±3% at 5 VDC
- Operating temperature: -40° to 80°C (-40°F to 176°F)
- Accuracy: ±4% of full scale. (float gauge errors not included.)
- Repeatability: ±1%.
- Operational voltage range: 3.5 to 6.0 VDC
- Output voltage: ratiometric 10−90% of input voltage @ 10−90% volume
- Resolution – infinite
- Operating current: 4.5 mA
- Output current: ± 1 mA
- Hall Effect modules are UL classified as intrinsically safe for Class 1, Division 1, Groups C and D (hazardous locations)

Gauge Materials of Construction*

- Head – die cast aluminum.
- Center shaft, support tube, and float rod – tempered aluminum
- Gears, cross stud, and bearing – stainless steel
- Drive magnet – alnico
- Gear housing – acetal
- Float – nitrile rubber

Dial Materials of Construction*

- Crystal and case: polycarbonate.
- Dial – painted aluminum

*Materials and specifications are subject to change without notice. Ratings subject to change due to temperature and other environmental considerations.

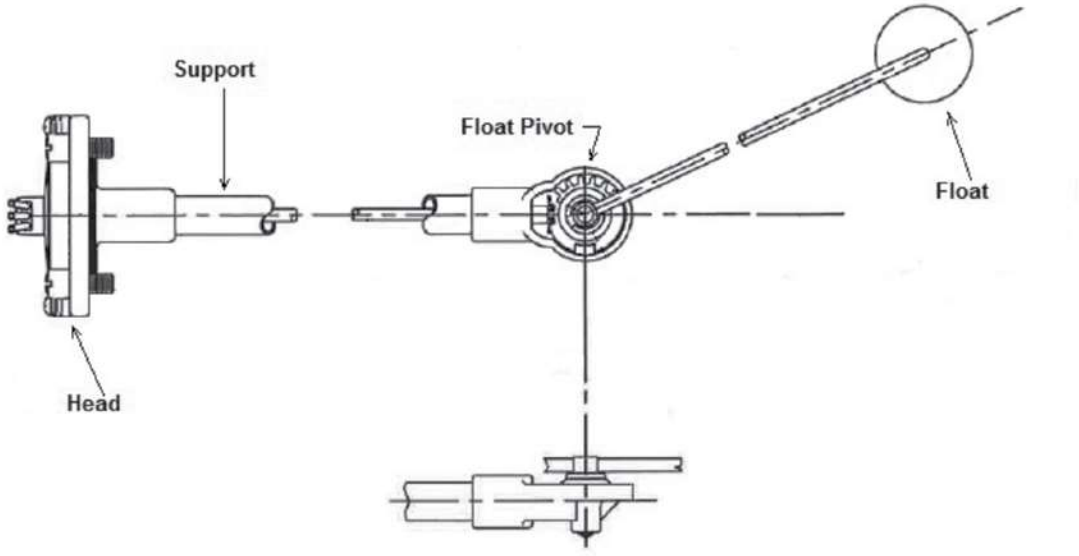

www.Cat-ElectricPower.com
©2015 Caterpillar
All rights reserved.

Materials and specifications are subject to change without notice. CAT, CATERPILLAR, their respective logos, “Caterpillar Yellow”, the “Power Edge” trade dress as well as corporate and product identity used herein, are trademarks of Caterpillar and may not be used without permission.

GCCP 1.2
Control Panel



Image shown may not reflect actual configuration.

GCCP 1.2 – Control Panel

GCCP 1.2 is an Auto Start Control Module suitable for a wide variety of diesel gen-set applications. Monitoring an extensive number of engine parameters, the modules will display warnings, shutdown and engine status information on the back-lit LCD screen, illuminated LEDs and remote PC.

Description

The controller is compatible with electronic (CAN) and non-electronic (magnetic pick-up/alternator sensing) engines and offer an extensive number of flexible inputs, outputs and extensive engine protections so the system can be easily adapted to meet the most demanding industry requirements.

The extensive list of features includes enhanced event and performance monitoring, remote communications & PLC functionality. The modules can be easily configured using a configuration suite PC software.

Full Range of Attachments

- Wide range of system expansion attachments, designed specifically to work with the GCCP controller
- Flexible packaging options for easy and cost effective installation

Benefits

- Hours counter provides accurate information for monitoring and maintenance periods
- User-friendly set-up and button layout for ease of use
- Multiple parameters are monitored & displayed simultaneously for full visibility
- The module can be configured to suit a wide range of applications for user flexibility
- PLC editor allows user configurable functions to meet user specific application requirements
- RS485 Communication port can be used for the Remote Monitoring Communication (Compatible with Cat PLG)

World Wide Product Support

- Cat dealers provide extensive pre and post sale support
- Cat dealers have over 1,600 dealer branch stores operating in 200 countries

Features

- 4-line back-lit LCD text display
- Multiple display languages
- Five-key menu navigation
- LCD alarm indication
- Customisable power-up text and images
- Data logging facility
- Internal PLC editor
- Protections disable feature
- Fully configurable via PC using USB & RS485 communication
- Front panel configuration with PIN protection
- Power save mode
- 3-phase generator sensing and protection
- Generator current and power monitoring (kW, kvar, kVA, pf) kW and kvar overload and reverse power alarms
- Over current protection
- Unbalanced load protection
- Breaker control via fascia buttons
- Fuel and start outputs configurable when using CAN Support for 0V to 10V & 4 mA to 20 mA sensors
- 8 Configurable digital inputs (3 available for Customer use)
- 8 Configurable digital outputs (5 available for Customer use)
- 4 Configurable analogue inputs (3 available for Customer use)
- CAN, MPU and alternator frequency speed sensing in one variant
- Real time clock
- Engine pre-heat and post-heat functions
- Engine run-time scheduler
- Engine idle control for starting & stopping
- Fuel usage monitor and low fuel level alarms
- 3 Configurable maintenance alarms
- MODBUS RTU & TCP support
- User configurable MODBUS pages

SPECIFICATIONS

DC SUPPLY

CONTINUOUS VOLTAGE RATING

8V to 35V continuous
5V for upto 1 minute

CRANKING DROPOUTS

Able to survive 0V for 100 mS, providing supply was at least 10V before dropout and supply recovers to 5V. This is achieved without the need for internal batteries.

LEDs and backlight will not be maintained during cranking

MAXIMUM OPERATING CURRENT

260 mA at 12V, 150 mA at 24V

MAXIMUM STANDBY CURRENT

145 mA at 12V, 85 mA at 24V

CHARGE FAIL/EXCITATION RANGE

0V to 35V

GENERATOR & MAINS (UTILITY) VOLTAGE RANGE

15V to 415 V AC (Ph to N)
26 V to 719 V AC (Ph to Ph)

MAGNETIC PICK-UP VOLTAGE RANGE

+/- 0.5 V to 70 V

FREQUENCY RANGE

10,000 Hz (max)

INPUTS

DIGITAL INPUTS A TO H

Negative switching

ANALOGUE INPUTS A TO D

Configurable as:

Negative switching digital input 0-10V sensor 4 mA to 20 mA Resistive Sensor

ANALOGUE INPUTS A TO C

Configurable as:

Negative switching digital input Resistive Sensor

OUTPUTS

OUTPUT A and B (FUEL & START)

15 A DC at supply voltage

AUXILIARY OUTPUTS C, D, E, F, G, H, I & J 2

A DC at supply voltage

DIMENSIONS

OVERALL

216 mm x 158 mm x 43 mm
8.5" x 6.2" x 1.5"

PANEL CUTOUT

184 mm x 137 mm
7.2" x 5.3"

MAXIMUM PANEL THICKNESS

8 mm
0.3"

OPERATING TEMPERATURE

-30°C to +70°C
-22°F to +158°F

STORAGE TEMPERATURE RANGE

-40°C to +85°C
-40°F to +185°F

STANDARDS

UL, cUL Listed
NFPA 70#
Electro-Magnetic Compatibility: BS EN 61000-6-2/6-4 Electrical Safety: BS EN 60950
Temperature: BS EN 60068-2-1, BS EN 60068-2-2
Vibration: BS EN 60068-2-6
Humidity: BS EN 60068-2-30, BS EN 60068-2-78 Shock: BS EN 60068-2-27
Degrees of protection provided by enclosures: BS EN 60529 Ingress Protection: IP65 – Front of module when installed into the control panel with the optional sealing gasket
Applicable codes and standards facilitate compliance to NFPA 70

Input Expansion Module

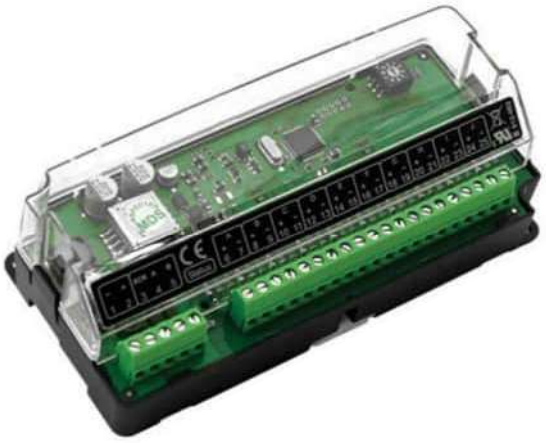

Picture shown may not reflect actual configuration.

Input Expansion Module

The Ratiometric Input Expansion module is used in conjunction with supported controllers to provide additional, flexible, input functionality. The module's ID switch is configurable from the module and the 10 inputs can be configured from within the 'host controller'.

The ratiometric inputs can be configured in a number of ways to connect to digital switches, resistive sensors, 0 – 10 V DC signals or 4 – 20 mA signals.

LED indication is provided for 'Power On' and 'Link Lost'.

Features

- Power On/Link Lost LED
- 10 inputs configurable for digital/resistive 4 – 20 mA and 0 – 10 V DC
- A maximum of 4 modules can be connected to 1 host control module to provide up to 40 additional configurable inputs
- Works up to 1.2 km (0.75 miles) from the host controller
- Terminal strip connection for quick and easy set-up

ENVIRONMENTAL TESTING STANDARD

ELECTRO-MAGNETIC COMPATIBILITY

BS EN 61000-6-2
EMC Generic Immunity Standard for the Industrial Environment
BS EN 61000-6-4
EMC Generic Emission Standard for the Industrial Environment

ELECTRICAL SAFETY

BS EN 60950
Safety of Information Technology Equipment, including Electrical Business Equipment

TEMPERATURE

BS EN 60068-2-1
Ab/Ae Cold Test -30 °C BS EN 60068-2-2
Bb/Be Dry Heat +70°C

VIBRATION

BS EN 60068-2-6
Ten sweeps in each of three major axes
5 Hz to 8 Hz @ +/-7.5 mm, 8 Hz to 500 Hz @ 2 gn

SHOCK

BS EN 60068-2-27
Three shocks in each of three major axes 15 gn in 11 Ms

HUMIDITY

BS EN 60068-2-30
Db Damp Heat Cyclic 20/55°C @ 95% RH 48 Hours
BS EN 60068-2-78
Cab Damp Heat Static 40°C @ 93% RH 48 Hours

DEGREES OF PROTECTION PROVIDED BY ENCLOSURES BS EN 60529

IP21

SPECIFICATION

CONTINUOUS VOLTAGE RATING

8 V to 35 V Continuous

CRANKING DROPOUTS

Able to survive 0 V for 50 mS, providing supply was at least 10 V before dropout and supply recovers to 5 V. This is achieved without the need for internal batteries. LEDs light will not be maintained during cranking.

MAXIMUM OPERATING CURRENT

292 mA at 12 V, 167 mA at 24 V mA at 24 V

MAXIMUM STANDBY CURRENT

101 mA at 12 V, 167 mA at 24 V

INPUTS

10 inputs configurable for digital/resistive (3k ohms) 4 – 20 mA and 0 – 10 V DC

DIMENSIONS OVERALL

165 mm x 76 mm x 49 mm

STROAGE TEMPERATURE RANGE

-40°C to + 85°C

LET'S DO THE WORK.™

www.cat.com/electricpower
©2023 Caterpillar
All rights reserved.
Materials and specifications are subject to change without notice.
The International System of Units (SI) is used in this publication. CAT, CATERPILLAR, LET'S DO THE WORK, their respective logos, "Caterpillar Corporate Yellow", the "Power Edge" and Cat "Modern Hex" trade dress as well as corporate and product identity used herein, are trademarks of Caterpillar and may not be used without permission.

LEHE2019-01 (03/23)

Output Expansion Module



Picture shown may not reflect actual configuration.

Output Expansion Module

Output relay expansion module for use with compatible control modules. The Output Expansion module has been designed to extend a host module's output capabilities.

A maximum of 10 Output Expansion modules can be connected to an individual module at any one time. All outputs are configurable via the host controller.

The module will work up to 1 KM (0.6miles) from the host control module.

Features

- Power On/Link Lost LED ID SWITCH
- 10 expansion modules can be connected to 1 host controller at a time
- 8 configurable relay contacts with LED indicators
- 4 Normally Open (N/O)
- 4 Change Over (C/O)
- Terminal strip connection for quick and easy set-up

ENVIRONMENTAL TESTING STANDARD

ELECTRO-MAGNETIC COMPATIBILITY

BS EN 61000-6-2
EMC Generic Immunity Standard for the Industrial Environment
BS EN 61000-6-4
EMC Generic Emission Standard for the Industrial Environment

ELECTRICAL SAFETY

BS EN 60950
Safety of Information Technology Equipment, including Electrical Business Equipment

TEMPERATURE

BS EN 60068-2-1
Ab/Ae Cold Test -30 °C BS EN 60068-2-2
Bb/Be Dry Heat +70°C

VIBRATION

BS EN 60068-2-6
Ten sweeps in each of three major axes
5 Hz to 8 Hz @ +/-7.5 mm, 8 Hz to 500 Hz @ 2 gn

SHOCK

BS EN 60068-2-27
Three shocks in each of three major axes 15 gn in 11 Ms

HUMIDITY

BS EN 60068-2-30
Db Damp Heat Cyclic 20/55 °C @ 95% RH 48 Hours BS EN 60068-2-78
Cab Damp Heat Static 40 °C @ 93% RH 48 Hours

SPECIFICATION

CONTINUOUS VOLTAGE RATING

8 V to 35 V Continuous

CRANKING DROPOUTS

Able to survive 0 V for 50 mS, providing supply was at least 10 V before dropout and supply recovers to 5 V. This is achieved without the need for internal batteries. LEDs and backlight will not be maintained during cranking.

MAXIMUM OPERATING CURRENT

325 mA at 12 V, 152 mA at 24 V

MAXIMUM STANDBY CURRENT

70 mA at 12 V, 32 mA at 24 V

AUXILIARY RELAY CONTACTS

2 Amp DC rated voltage free

DIMENSIONS OVERALL

165 mm x 76 mm x 49 mm
6.5" x 3" x 1.9"

LET'S DO THE WORK.™

www.cat.com/electricpower

©2023 Caterpillar
All rights reserved.
Materials and specifications are subject to change without notice.
The International System of Units (SI) is used in this publication. CAT, CATERPILLAR, LET'S DO THE WORK, their respective logos, "Caterpillar Corporate Yellow", the "Power Edge" and Cat "Modern Hex" trade dress as well as corporate and product identity used herein, are trademarks of Caterpillar and may not be used without permission.

LEHE2020-01 (03/23)

DSEGenset

DSE2152
ANALOGUE OUTPUT EXPANSION MODULE

The DSE2152 Analogue Output Expansion Module is used in conjunction with supported DSENet controllers to provide 6 additional outputs. The outputs can be individually configured as 0 to 10 V or 4 to 20 mA, via the 'host controller'.

LED indication is provided for 'Power On' and 'Link Lost'

The DSE2152 is designed to be mounted within a control panel, either on the panel DIN rail utilising the integral mounts, or chassis mounted, utilising the mounting holes.

Up to four DSE2152 modules can be linked together to provide up to 24 additional outputs. An ID switch is provided on the module for identification.

ENVIRONMENTAL TESTING STANDARDS

ELECTRO MAGNETIC COMPATIBILITY
BS EN 61000-6-2
EMC Generic Immunity Standard for the Industrial Environment
BS EN 61000-6-4
EMC Generic Emission Standard for the Industrial Environment

ELECTRICAL SAFETY
BS EN 60950
Safety of Information Technology Equipment, including Electrical Business Equipment

TEMPERATURE
BS EN 60068-2-1
Ab/Ae Cold Test -30 °C
BS EN 60068-2-2
Bb/Be Dry Heat +70 °C

VIBRATION
BS EN 60068-2-6
Ten sweeps in each of three major axes
5 Hz to 8 Hz at +/-7.5 mm, 8 Hz to 500 Hz at 2 gn

HUMIDITY
BS EN 60068-2-30
Db Damp Heat Cyclic 20/55 °C at 95% RH 48 Hours
BS EN 60068-2-78
Cab Damp Heat Static 40 °C at 93% RH 48 Hours

SHOCK
BS EN 60068-2-27
Three shocks in each of three major axes
15 gn in 11 mS

DEGREES OF PROTECTION PROVIDED BY ENCLOSURES
BS EN 60529
IP21

COMPREHENSIVE FEATURE LIST TO SUIT A WIDE VARIETY OF GEN-SET APPLICATIONS

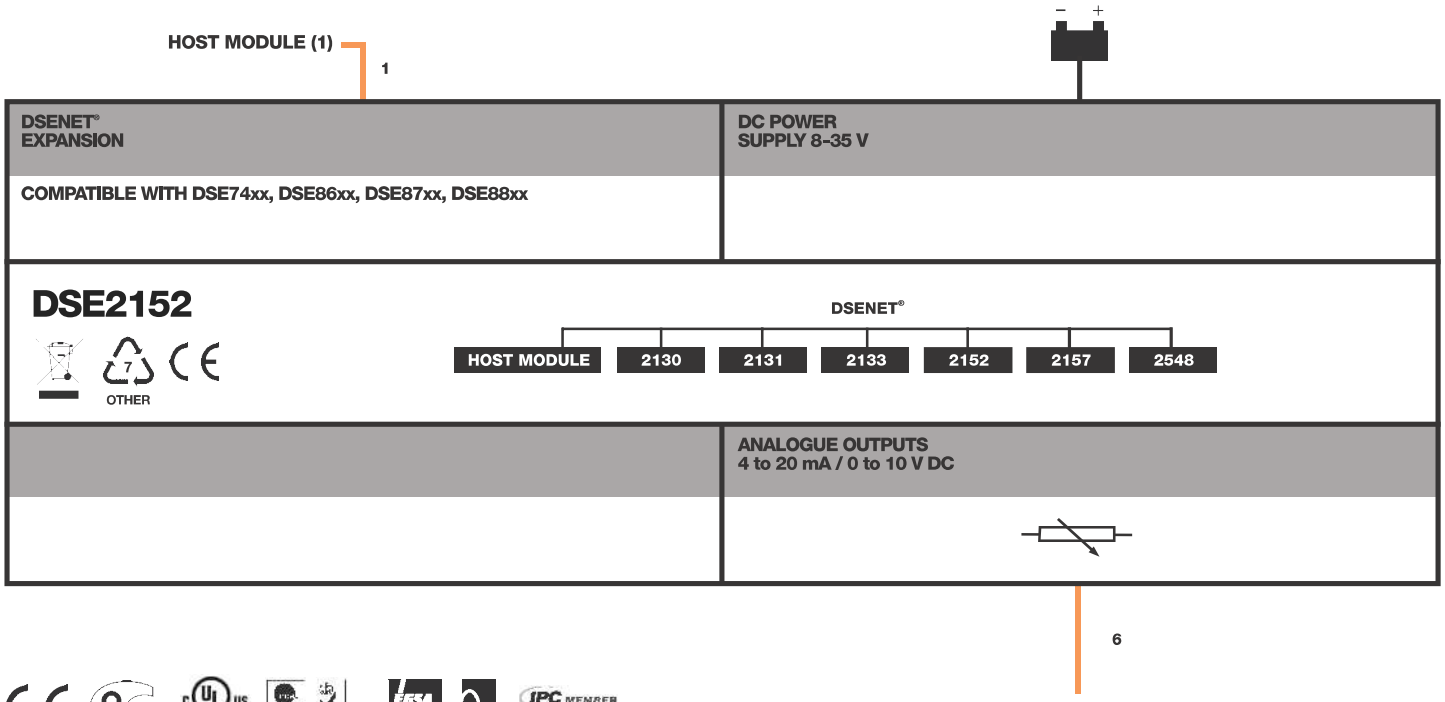

DSEGenset

DSE2152
ANALOGUE OUTPUT EXPANSION MODULE

DSE**2152**

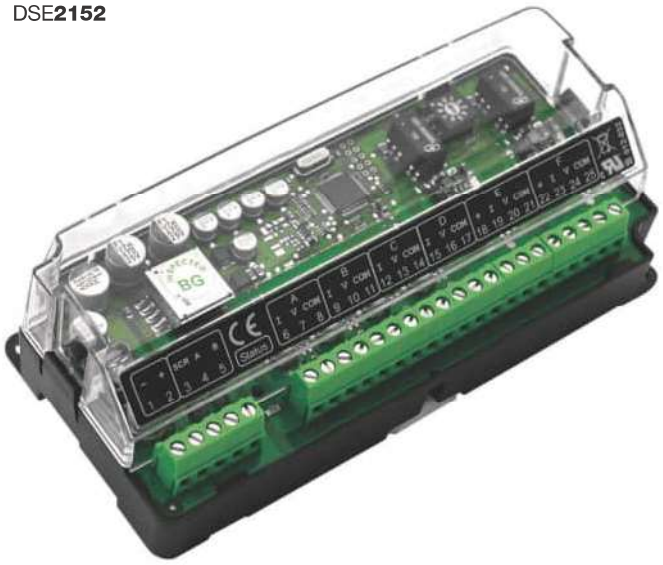

KEY FEATURES
- Analogue output expansion module for supported DSENet controllers
- 6 outputs configurable as 4 to 20mA (0 to 20mA) and 0 to 10 V DC
- Power On/Link Lost LED
- A maximum of 4 modules can be connected to 1 host control module to provide up to 24 additional configurable outputs
- Works up to 1.2 km (0.75 miles) from the host controller
- Terminal strip conection for quick and easy set up
- Simplified configuration using DSE PC Configuration Suite Software through host controller

KEY BENEFIT
- Ideal for applications where additional control monitoring is critical

SPECIFICATION

DC SUPPLY
8 V to 35 V continuous

CRANKING DROPOUTS
Able to survive 0 V for 50 mS, providing supply was at least 10 V before dropout and supply recovers to 5 V. This is achieved without the need for internal batteries. LEDs will not be maintained during cranking.

MAXIMUM OPERATING CURRENT
120 mA at 12 V, 60 mA at 24 V

OUTPUTS
OUTPUT A, B, C & D
Non-Isolated
Configurable As: 4 to 20 mA DC or
0 V to 10 V DC

OUTPUT E & F
Optional Isolation
Configurable As: 4 to 20 mA DC or
0 V to 10 V DC

DIMENSIONS
OVERALL
165 mm x 76 mm x 49 mm
6.5” x 3” x 1.9”

STORAGE TEMPERATURE RANGE
-40 °C to +85 °C
-40 °F to +185 °F

OPERATING TEMPERATURE RANGE
-30°C to +70°C
-22 °F to +158 °F

RELATED MATERIALS

TITLE	PART NO’S
DSE2152 Installation Instructions	053-134
DSE2152 Operator Manual	057-141
DSE7410/20 Data Sheet	055-108
DSE8610 Data Sheet	055-083
DSE8620 Data Sheet	055-099
DSE8660 Data Sheet	055-086
DSE8710 Data Sheet	055-184
DSE8760 Data Sheet	055-185
DSE8810 Data Sheet	055-116
DSE8860 Data Sheet	055-139

DEEP SEA ELECTRONICS PLC UK
Highfield House, Hunmanby Industrial Estate, Hunmanby YO14 0PH
TELEPHONE +44 (0) 1723 890099 **FACSIMILE** +44 (0) 1723 893303
EMAIL sales@deepseaplc.com **WEBSITE** www.deepseaplc.com

DEEP SEA ELECTRONICS INC USA
3230 Williams Avenue, Rockford, IL 61101-2668 USA
TELEPHONE +1 (815) 316 8706 **FACSIMILE** +1 (815) 316 8708
EMAIL sales@deepseausa.com **WEBSITE** www.deepseausa.com

Deep Sea Electronics Plc maintains a policy of continuous development and reserves the right to change the details shown on this data sheet without prior notice. The contents are intended for guidance only.

Registered in England & Wales No.01319649
VAT No.316923457

Annunciators



Picture shown may not reflect actual configuration.

Local Annunicator Module

It is an LED expansion module that can be used with compatible control modules. The module has been designed to display a maximum of eight individual LED indications up to a maximum distance of 1 KM (0.6 miles).

The Annunciator will consist of two modules to provide a 16 Channel Fault annunciation.

It is presented in a vertical enclosure. It includes an alarm sounder that is triggered when the host controller detects an alarm condition. The alarm can be muted using the front push button.

The Panels will be fitted with removable label cards which can be used to identify the standard NFPA alarms if desired.

It includes individual LEDs for each channel and a 'Power On' LED that flashes when the link with the host controller is lost.

Features

- The Local annunciator has an integral Sounder/Horn
- Eight configurable LEDs (per module)
- Works up to 1 KM (0.6 miles) from the host controller
- A single controller can support five Caterpillar configured remote annunciator control boxes

ENVIRONMENTAL TESTING STANDARD

ELECTRO-MAGNETIC COMPATIBILITY

BS EN 61000-6-2
EMC Generic Immunity Standard for the Industrial Environment
BS EN 61000-6-4
EMC Generic Emission Standard for the Industrial Environment

ELECTRICAL SAFETY

BS EN 60950
Safety of Information Technology Equipment, including Electrical Business Equipment

TEMPERATURE

BS EN 60068-2-1
Ab/Ae Cold Test -30 °C BS EN 60068-2-2
Bb/Be Dry Heat +70°C

VIBRATION

BS EN 60068-2-6
Ten sweeps in each of three major axes
5 Hz to 8 Hz @ +/-7.5 mm, 8 Hz to 500 Hz @ 2 gn

SHOCK

BS EN 60068-2-27
Three shocks in each of three major axes 15 gn in 11 Ms

HUMIDITY

BS EN 60068-2-30
Db Damp Heat Cyclic 20/55 °C @ 95% RH 48 Hours
BS EN 60068-2-78
Cab Damp Heat Static 40 °C @ 93% RH 48 Hours

DEGREES OF PROTECTION PROVIDED BY ENCLOSURES BS EN 60529

IP65 – Front of module when installed into the control panel with the supplied sealing gasket.

SPECIFICATION

CONTINUOUS VOLTAGE RATING

8 V to 35 V Continuous

CRANKING DROPOUTS

Able to survive 0 V for 50 mS, providing supply was at least 10 V before dropout and supply recovers to 5 V. This is achieved without the need for internal batteries. LEDs and backlight will not be maintained during cranking.

MAXIMUM OPERATING CURRENT

112 mA at 12 V, 53 mA at 24 V

MAXIMUM STANDBY CURRENT

74 mA at 12 V, 35 mA at 24 V

DIMENSIONS OVERALL

355 mm x 369 mm x 90 mm
13.6" x 14.5" x 3.5"

PANEL CUT-OUT

286 mm x 326 mm x 93 mm
11.2" x 12.8" x 3.6"

MAXIMUM PANEL THICKNESS

8 mm
0.3"

LET'S DO THE WORK.™

www.cat.com/electricpower
©2023 Caterpillar
All rights reserved.
Materials and specifications are subject to change without notice.
The International System of Units (SI) is used in this publication. CAT, CATERPILLAR, LET'S DO THE WORK, their respective logos, "Caterpillar Corporate Yellow", the "Power Edge" and Cat "Modern Hex" trade dress as well as corporate and product identity used herein, are trademarks of Caterpillar and may not be used without permission.

LEHE2021-01 (03/23)

CATERPILLAR®

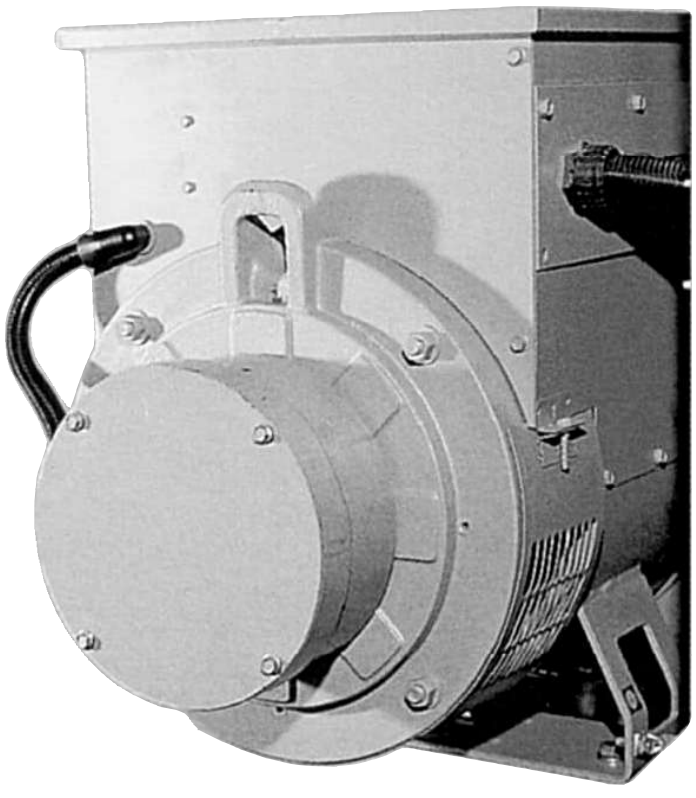

AVR12 – PERMANENT MAGNET GENERATOR

The permanent magnet generator (PMG) option upgrades the excitation system of the generator from the standard self-excited system to a separately-excited system. The PMG couples to the non-drive end of the generator and provides an independent source of excitation power that ensures initial voltage build-up. The PMG improves the voltage response of the generator during transient load application, such as motor starting, and provides a sustained short-circuit current for the operation of protective devices. Isolation of the excitation power ensures that regulation is not affected by non-linear distorting loads.

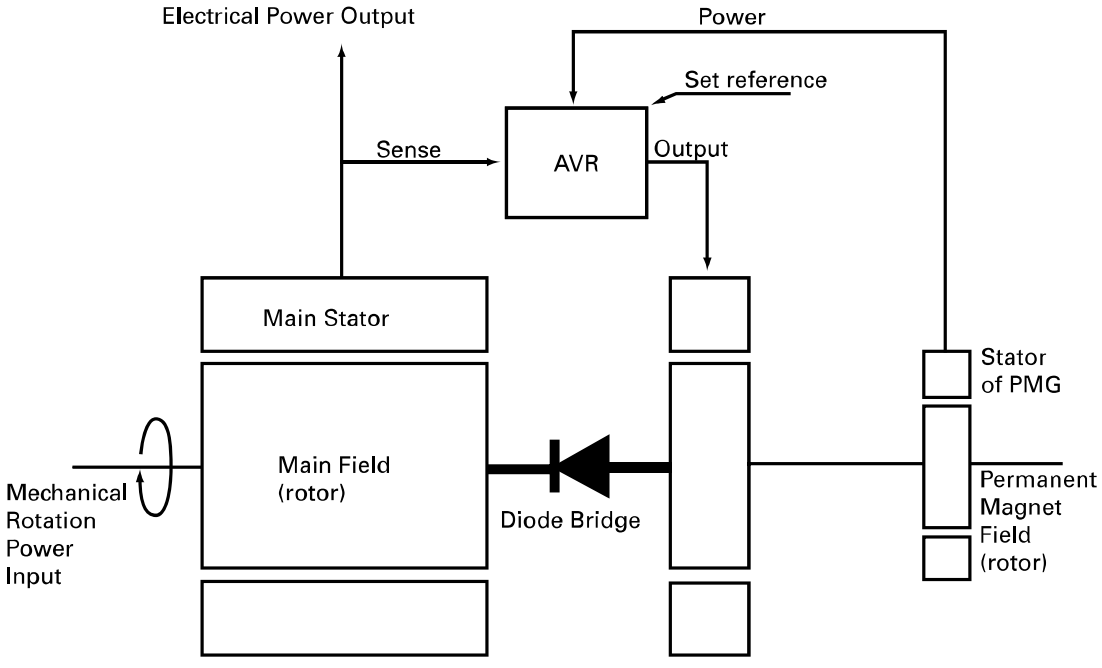

BLOCK DIAGRAM OF PMG

© 2005 Caterpillar
All Rights Reserved.
Printed in U.S.A.

Circuit Breakers



Moulded Case Circuit Breakers:

100 A – 3000 A
200 kW – 750 kW Gensets

Features

- 100% UL Listing
- Electronic Trip Units
- Double insulation
- Clear indication of breaker status
- Can be used in normal operation in an ambient of –25°and+70° C
- Auxiliary contacts available
- Insulating case constructed from fiberglass reinforced synthetic resin
- Anti-corrosion treatment on all metal parts
- Optional 2 or 3 Circuit Breakers

Conformity with International Standards

Circuit Breakers have been designed to comply with these major standards:

- UL 489
- CSA22.2
- IEC 60947-2
- NEMA AB1

C9, C13, C15, C18 Circuit Breakers

Manually Operated Circuit Breakers

Current (A)	Frame	Number of Poles	Interrupting Ratings (kA ms)			Trip Unit	(Lugs) Cable Size Range / Phase	Auxilliary Options
			240V	480V	600V			
100	H	3	65	35	18	Electronic LSI	8-3/0 AWG	Form C (1 NO + 1 NC) Shunt Trip 24 VDC
250	J	3	65	35	18		(2) 3/0 – 250 kcmil	
400	XT5	3	65	35	18	Electronic LS/I (S or I) or LSI	(2) 2/0 – 500 kcmil	1 Form C + 1 Bell Alarm 60 VAC/VDC Shunt Trip 24 VDC
600	XT6	3	65	35	20		(3) 2/0 – 400 kcmil	
800	XT6	3	65	35	20		(3) 2/0 – 400 kcmil	
1200	XT7	3	65	50	25		(4) 4/0 – 500 kcmil	1 Form C + 1 Bell Alarm Shunt Trip 24 VAC/VDC
1600	T8	3	65	35	18	Electronic LSI	BUS BAR	Form C (1 NO + 1 NC) Shunt Trip 24 VDC
2000	T8	3	65	35	18		BUS BAR	
2500	T8	3	65	35	18		BUS BAR	
3000	T8	3	65	35	18		BUS BAR	

Electrically Operated Circuit Breakers

Current (A)	Frame	Number of Poles	Interrupting Ratings (kA ms)			Trip Unit	(Lugs) Cable Size Range / Phase	Auxilliary Options
			240V	480V	600V			
800	XT7M	3	65	50	25	Electronic LSI	(4) 4/0 – 500 kcmil	2 Form C + 1 Bell Alarm 24 VDC
1200	XT7M	3	65	50	25	Electronic LSI	(4) 4/0 – 500 kcmil	2 Form C + 1 Bell Alarm 24 VDC
2000	T 8M-S	3	125	125	100	Electronic LSI	BUS BAR	2 Form C + 1 Bell Alarm 24 VDC
3000	T 8M-S	3	125	125	100	Electronic LSI	BUS BAR	2 Form C + 1 Bell Alarm 24 VDC

L-I Mode

- Long Time / Overload Protection, "L" has an adjustable trip threshold and adjustable time delay.
- Instantaneous Short Circuit Protection, "I" has an adjustable short circuit trip threshold and once exceeded will cause the circuit breaker to trip instantaneously.

L-S Mode

- Long Time / Overload Protection, "L" has an adjustable trip threshold and adjustable time delay.
- Short Circuit Protection, "S" has an adjustable short circuit trip threshold and adjustable time delay if necessary for coordinating with downstream loads.
- Instantaneous Short Circuit Protection, "I" is still included, but the threshold level is not adjustable and exists at a predetermined level.

Electronic L-S-I Trip Units

- Long Time/Overload Protection, "L" has an adjustable trip threshold and adjustable time delay.
- Short Circuit Protection, "S" has an adjustable short circuit trip threshold and adjustable time delay if necessary for coordinating with downstream loads.
- Instantaneous Short Circuit Protection, "I" has an adjustable short circuit trip threshold and once exceeded will cause the circuit breaker to trip instantaneously.

Circuit Breakers

Single Breaker Options (250 – 3000A)

Model	Current (A)	Operation
C9	100	Manually Operated
C9	250	Manually Operated
C9	400	Manually Operated
C9 , C13 , C15 , C18	600	Manually Operated
C9 , C13 , C15 , C18	800	Manually Operated or Electrically Operated
C9 , C13 , C15 , C18	1200	Manually Operated or Electrically Operated
C13 , C15 , C18	1600	Manually Operated
C15 , C18	2000	Manually Operated or Electrically Operated
C18	2500	Manually Operated
C18	3000	Manually Operated or Electrically Operated

Multiple Breaker Options

Model	Main Breaker Box		Auxiliary Box
	1st Breaker (Amps) Manually Operated	2nd Breaker (Amps) Manually Operated	Breaker (Amps) Manually Operated
C9 , C13 , C15 , C18	100	100, 250, 400, 600, 800, or 1200	3rd Breaker: 100, 250 or 400 (Not availabe if 1st & 2nd Breaker = 1200A)
C9 , C13 , C15 , C18	250		
C9 , C13 , C15 , C18	400		
C9 , C13 , C15 , C18	600		
C9 , C13 , C15 , C18	800		
C9 , C13 , C15 , C18	1200		
C13 , C15 , C18	1600	Not Available	2nd Breaker: 100, 250 or 400
C15 , C18	2000		
C18	2500		
C18	3000		

XT6 Ekip Dip LSI
L-S-I Functions

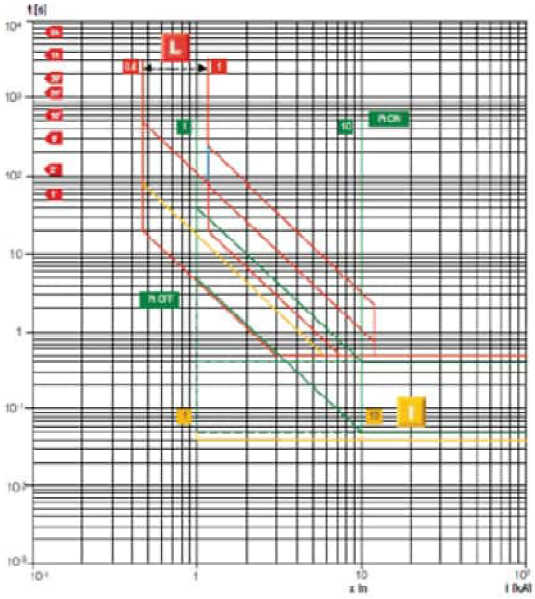

XT6 Ekip Dip LS/I
L-S-I Functions

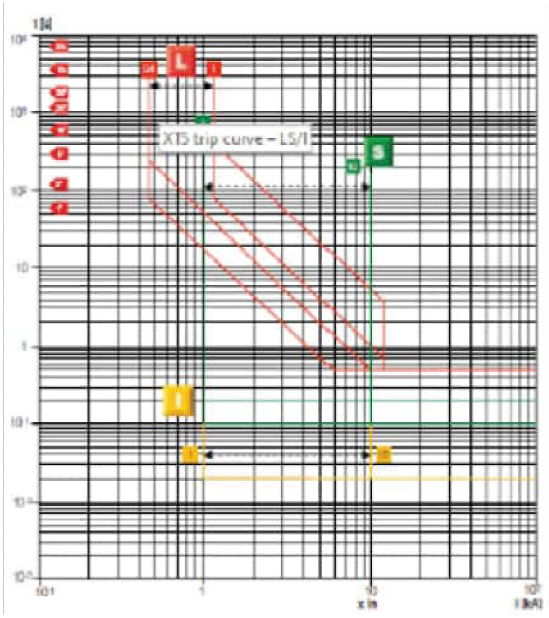

Figure 7

XT5 – XT6 Ekip Dip LS/I
L-S-I Functions

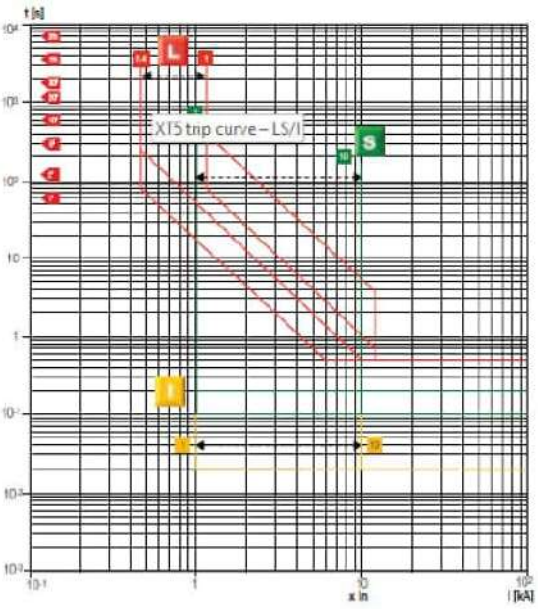

Figure 8

CATERPILLAR®

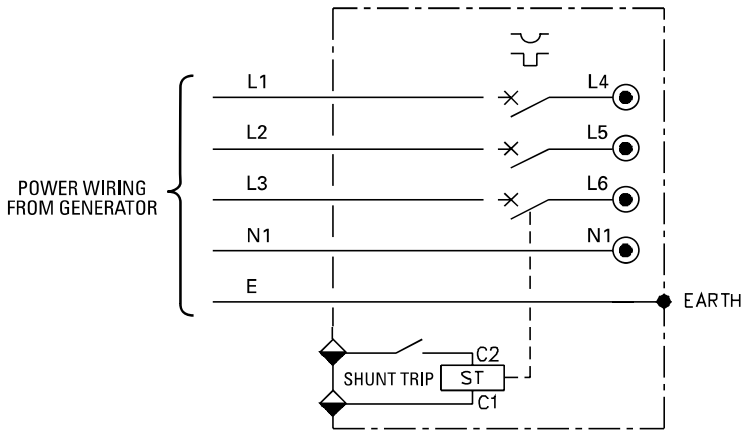

AUX – AUXILIARY CONTACTS SHT2 – 12/24 V SHUNT TRIP

Option SHT2 adds a DC operated shunt trip which can be used to automatically open the circuit breaker upon activation of a generator set shut down signal from the generator set control panel, or from a remote signal (supplied by others).

Option AUX adds an auxiliary changeover switch which can be used for remote indication of the circuit breaker status.

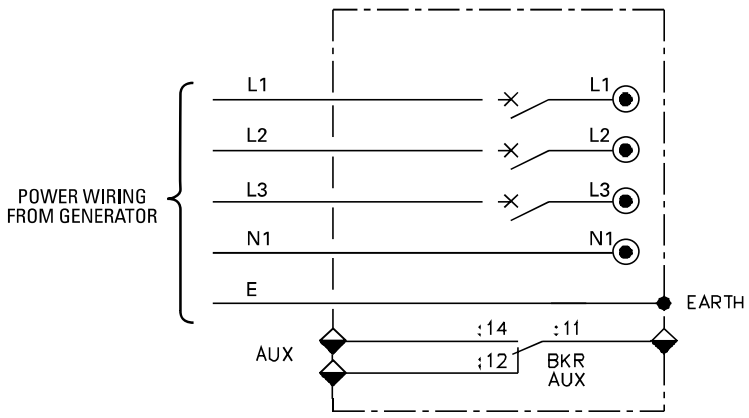

BREAKER BOX TERMINAL
POWER CONNECTION

Market: N. America

LEHE4009 (01-05)

Information contained in this publication may be considered confidential.
Discretion is recommended when distributing.
Materials and specifications are subject to change without notice.

www.cat-ElectricPower.com

© 2005 Caterpillar
All Rights Reserved.
Printed in U.S.A.

125 Amp Load Center



Image shown may not reflect actual package.

SPECIFICATIONS

Line Rated Current	125 A
Number of spaces	8
Number of circuits	16
Number of tandem circuit breakers	8
System Voltage	120/240 V AC
NEMA degree of protection	NEMA 3R outdoor
Electrical connection	Lugs
Wiring configuration	3-wire
Material	Tin plated aluminium busbar
Enclosure material	Galvannealed steel
Cover finish	Gray baked enamel
Product certifications	UL Listed

www.Cat-ElectricPower.com
©2016 Caterpillar
All rights reserved.

Materials and specifications are subject to change without notice.
CAT, CATERPILLAR, their respective logos, “Caterpillar Yellow”, the “Power Edge” trade dress as well as corporate and product identity used herein, are trademarks of Caterpillar and may not be used without permission.



Image shown may not reflect actual configuration.

20A Tamper-Resistant, Weather-Resistant GFCI Receptacles

Features and Benefits

- Automatically tests the GFCI every time the reset button is pushed in. The GFCI will not reset if the GFCI circuit is not functioning properly.
- By blocking reset of the GFCI if protection has been compromised, SmartLockPRO reduces the possibility of end-users incorrectly assuming that a reset GFCI outlet is providing ground fault protection when it actually is not.
- A line-load reversal diagnostic feature is provided which prevents the GFCI from being reset and stops power from being fed to the GFCI receptacle face or through to downstream devices. A green LED indicator on the GFCI's face also illuminates to alert the installer to the line-load wiring reversal.

Weather-Resistant GFCIs

- Meet UL 498 requirements for weather-resistant receptacles.

Tamper-Resistant GFCIs

- Shutter mechanism inside the receptacle blocks access to the contacts unless a two-prong plug is inserted, helping ensure foreign objects will be locked out.

Product Features

- Grounding: GFCI ground fault
- Feature: Weather and tamper-resistant
- Amperage: 20 Amp
- Voltage: 125 Volt
- NEMA: 5-20R
- Trip Level: Class A, 5mA plus or minus 1mA
- Pole: 2
- Wire: 3
- Color: White

Standards and Certifications

- NEMA: WD-6
- ANSI: C-73
- UL498: File E13399
- CSA C22.2 No. 42: File LR-57811
- NOM: 057
- UL 943: File E48380

Receptacles contained in a weather resistant box and in-use cover.



www.Cat-ElectricPower.com
©2016 Caterpillar
All rights reserved.

Materials and specifications are subject to change without notice. CAT, CATERPILLAR, their respective logos, "Caterpillar Yellow", the "Power Edge" trade dress as well as corporate and product identity used herein, are trademarks of Caterpillar and may not be used without permission.



Image shown may not reflect actual package.

LED Lights

Features

AC/DC Lighting Kit

- Capable of AC and DC operation with provided selector switch
- DC operation has a 60-minute timer switch to limit battery drain
- AC operation is enabled by transformer
- Low voltage, low energy circuit and operation
- Installation includes one single LED light.

Technical Data	
Theoretical Lumens Output	1600 lm
Operational Lumens Output	1000 lm
Color Temperature	5700 K
Lens	PC
Body	Aluminum
Weight	0.6 kg
IP Rating	IP68, IP6K9K
EMC	CISPR 25 Class 3, EN 12895, ISO 13766, ISO 14982, ISO 7637-2
Operating Temperatures	-40°C to +85°C (Overheat protected)

www.Cat-ElectricPower.com
©2022 Caterpillar
All rights reserved.

CAT, CATERPILLAR, LET'S DO THE WORK, their respective logos, "Caterpillar Corporate Yellow", the "Power Edge" and Cat "Modern Hex" trade dress as well as corporate and product identity used herein, are trademarks of Caterpillar and may not be used without permission.



Image shown may not reflect actual package.

Pump Style Jacket Water Heater

Single Phase 2500 Watts Pump style jacket water heater is a complete coolant preheater.
It features an integrated pump that combines the benefits of forced circulation with a compact design that can mount to a variety of small engine applications. Forced circulation of the coolant delivers uniform heating throughout the entire engine, extends element life and offers a significant reduction in electrical consumption.

UL Listed , ULc Listed
240V
Installation provided with shut-off valves

www.Cat-ElectricPower.com
©2016 Caterpillar
All rights reserved.

Materials and specifications are subject to change without notice.
CAT, CATERPILLAR, their respective logos, “Caterpillar Yellow”, the “Power Edge” trade dress as well as corporate and product identity used herein, are trademarks of Caterpillar and may not be used without permission.

AIR CLEANERS

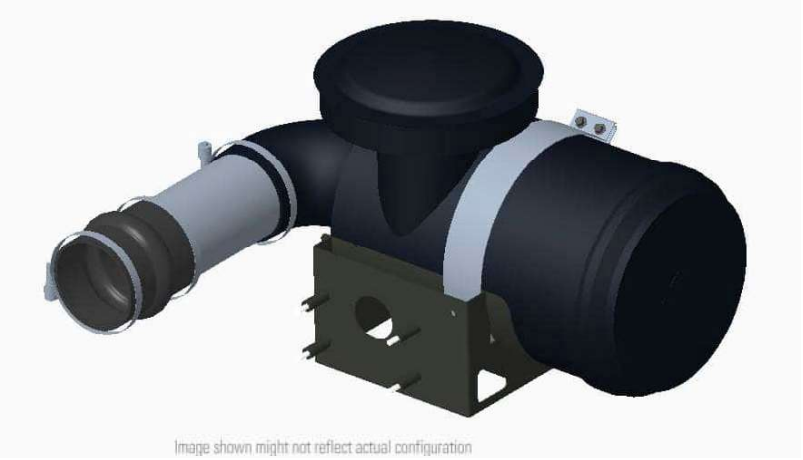

Image shown might not reflect actual configuration

AIR CLEANERS FOR C13/C15/C18 ENGINES

GENERAL DESCRIPTION

Air Cleaner reduce contaminants flowing into the air intake system, provide a high level of Engine protection from harmful contaminants and increase engine performance and fuel efficiency.

Dual element air cleaners provide additional protection for the Engine

FEATURES

- Radial Seal Technology
- Easy to read CAT filter service indicator with manual reset
- Standard Yellow Media
- Constant torque clamps
- Engine rear mounted filters with easy access to service filter to open and enclosed Gensets
- Air filters Designed for 500 hrs of service*
  *based on dust Concentration levels

Feature Code	Engine model	Dust Environment	Industry	Element	Housing
Dust Concentration level - 1-5mg/m3					
STD AIR	C13, C15, C18	Standard Duty	Factory, Office	Non-Canister	N-A
Dust Concentration level - 5-10mg/m3					
ACLSS04	C13, C15	Medium Duty	Construction, Factory	Single Element	Radial Seal, Metal Body
ACLSS05	C18	Medium Duty	Construction, Factory	Single Element	15" Radial Seal, Metal Body
ACLSS05	C18 PD 50 Hz	Medium Duty	Construction, Factory	Single Element	2off PowerCore Glass Filled Polypropylene Housing
ACLSS06	C18 60HZ	Medium Duty	Construction, Factory	Single Element	18" Radial Seal, Metal Body
ACLSS06	C18 PD 60 HZ	Medium Duty	Construction, Factory	Single Element	2off PowerCore Glass Filled Polypropylene Housing



Sample isolator

VIB4 Seismic Vibration Isolators (Zone 4)

For regions where seismic tremors are experienced, this option can be used in place of the standard anti-vibration mounting arrangement. These seismic zone 4 vibration isolators are designed to withstand the high shear forces that can arise under such seismic activity as per the 1994 Uniform Building Code. Isolators are positioned between the engine/generator mounts and the generator set base frame. The vibration isolators are matched to ensure minimal oscillation levels during generator set operation.

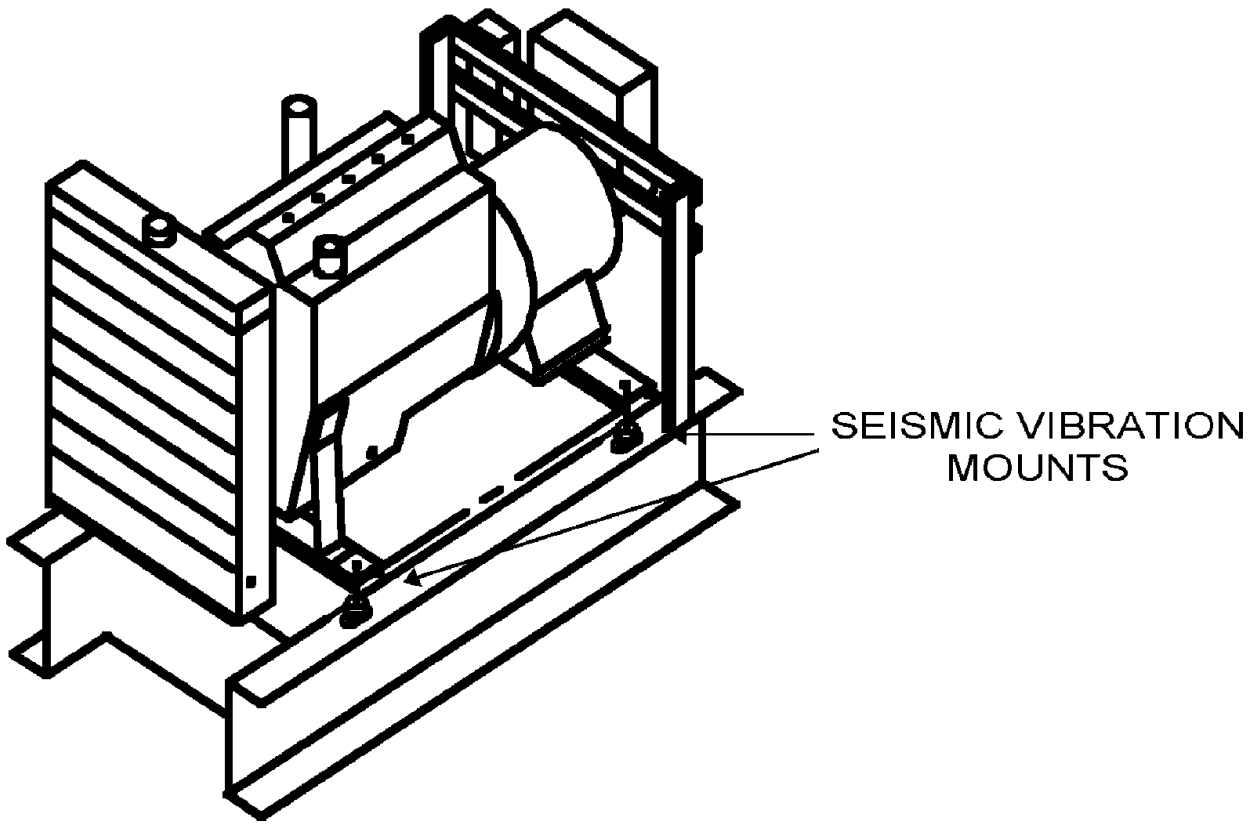

LEHE4004-02

Load vs Deflection

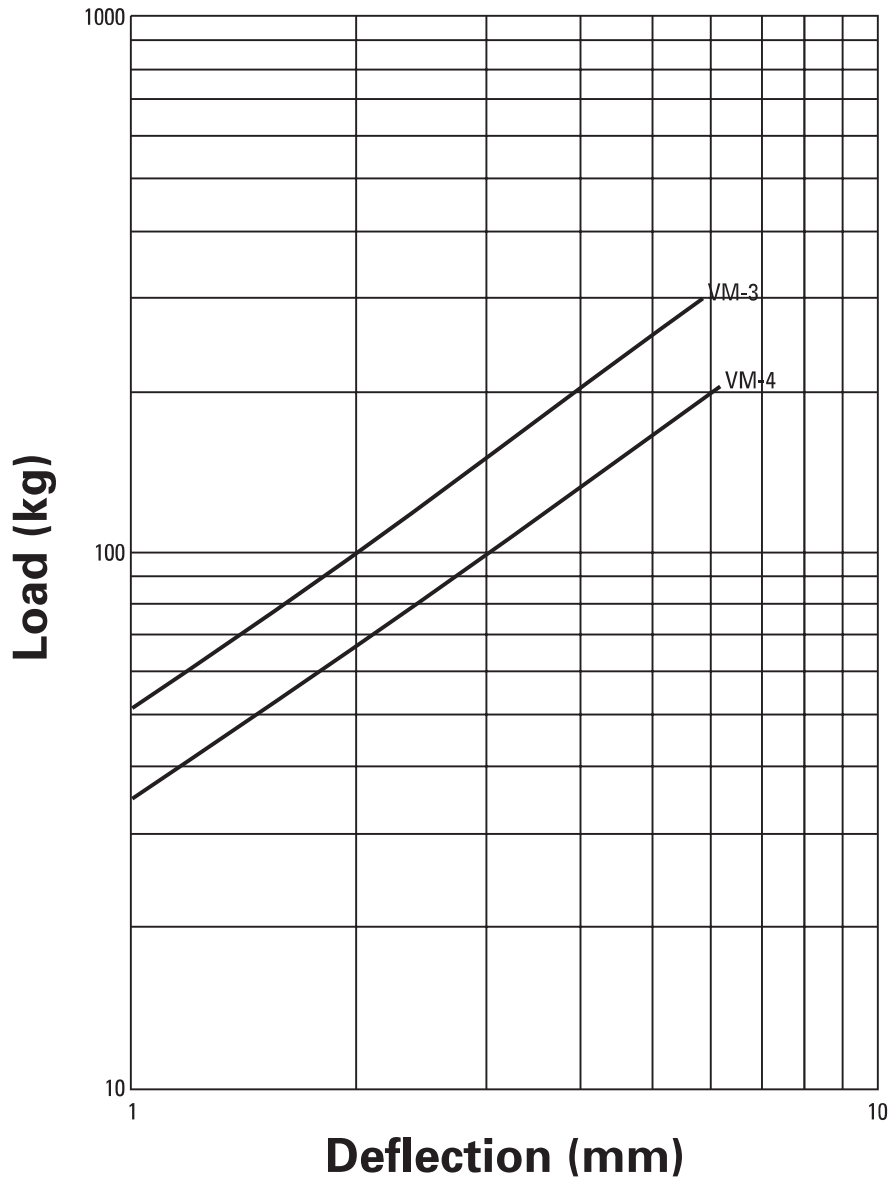

Diesel	
Engine Model	**Vib-Mt**
D25-6 D25-6S D30-8 D30-6S	VM-4
D40-4 D40-4S D50-4 D50-4S D60-4 D60-6S D80-6 D80-2S D100-6 D100-6S D125-6 D150-8 D175-2	VM-3

Information contained in this publication may be considered confidential.
Discretion is recommended when distributing.
Materials and specifications are subject to change without notice.
CAT, CATERPILLAR, their respective logos, “Caterpillar Yellow” and the POWER EDGE trade dress, as well as corporate and product identity used herein, are trademarks of Caterpillar and may not be used without permission.

Market: N. America

LEHE4004-02 (06-07)

www.cat-electricpower.com

© 2007 Caterpillar
All Rights Reserved.
Printed in U.S.A.



Cat® PL444 4G LTE Radio (Model: PL444 NA) Telematics Hardware

Product Description

The Caterpillar PL444 system is a Telematics product that is designed to record and store data from multiple datalinks (CAN J1939, Modbus RS485) present on higher level systems, then transmit the data offboard via wireless communications (cellular) to back office systems for end customer use.

Features

Design Specifications:

- 4G LTE Category 4 Radio
- GNSS signal tracking
- CAN datalink communication
- Modbus datalink communication
- Durable IP66/67-rated enclosure

Radio Connections / Pinout

	A	B	C	D	E	F	G	K	L	M
1	CAN_H	CAN_L	Not used	Not used	Not used	Not used	Not used	Not used	KSW	Batt+
2	Not used	Not used	Not used	Not used	Not used	Not used	Not used	Wireless Disable	Not used	Batt-
3	RS485 RTN	Not used	Not used	Not used	Not used	Not used	LSD1	Not used	Not used	Not used
4	RS485_A	RS485_B	Not used	Not used	Not used	Not used	Not used	Not used	Not used	Not used

CAN_H: CAN High
CAN_L: CAN Low
KSW: Keyswitch (Ignition) – Wakes the device up when tied to Batt+ voltage
Batt+: 12/24V Input
Batt-: Ground/Return
Wireless Disable: When pulled to ground, disables all RF transmissions (Cellular)
LSD1/2: Low Side Drivers 1 and 2. Connects a load with a voltage source, to ground when enabled, completing the circuit
RS485 RTN: RS-485 Shield
RS485A/B: RS-485 Modbus connections

Radio Dimensions

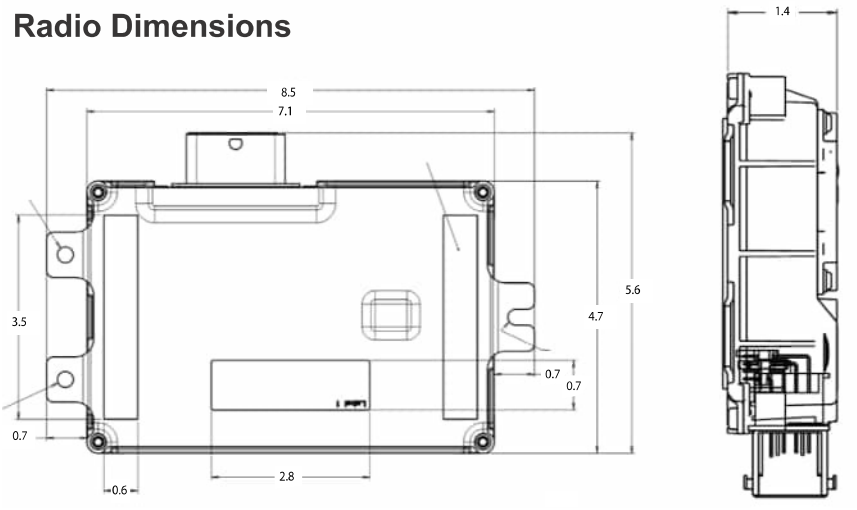

*All dimensions are in inches.

Technical Specifications

Input Voltage
Voltage Range ..... 9 to 32V DC
Protection ..... Reverse polarity

Current Consumption
Idle Current (non-transmitting) ..... < 300 mA
Peak Current ..... < 6A
Sleep Current ..... <3 mA

Physical Specifications
Enclosure Material ..... Plastic (PBT+ASA GF30 FR)
Aluminum (AlMg2.5 / H22; H23)
Dimensions (in) ..... 8.5 x 5.6 x 1.4
Weight ..... 0.45 kg
Interface Connectors ..... 48 pin Molex

Environment
Operating/Storage Temp ..... -40°C to +85°C
Ingress Protection IP66/67
Humidity ..... SAE J1455
Vibration ..... 9.8 Grms random (24-2000 Hz), up to 0.5 g^2/Hz

Regulatory Compliance
FCC, IC, CE RED, EN/UL/CSA 62368-1, RoHS, WEEE, REACH

LEDs
Orange — GNSS (Solid: GNSS Fix, 1Hz: Searching/no lock, Off: Fault)
Blue — Datalink (Flashing: Activity on J1939 or Modbus Off: Fault or No Connection)
Yellow — Cellular (Solid: Data connection established, Flashing: Searching for signal, Off: Modem off or Fault)
White — Bluetooth® (Solid: Connection established, Flashing: Advertising mode, Off: Bluetooth off or Fault)

Secure Key Injection
Security ..... Unique and cryptographic identity

Communications
Datalink J1939/CAN
Datalink ..... Modbus (RS-485)
Wireless ..... 4G LTE with 2G/3G fallback
Wireless ..... Bluetooth®/BLE 5.0

I/O
Low Side Drivers (300 mA max) 2
Switch to Ground 1
Keyswitch 1

Positioning (GNSS)
Signal Tracking ..... GPS/Galileo/GLONASS/BeiDou
Antenna ..... Internal

Cellular Communications

LTE Bands/Frequencies

Band	Frequencies (Uplink / Downlink) (MHz)
2	1850-1910 / 1930-1990
4	1710-1755 / 2110-2155
5	824-849 / 869-894
7	2500-2570 / 2620-2690
12/17	699-716 / 729-746
13	777-787 / 746-756

3G (UMTS) Bands/Frequencies

Band	Frequencies (Uplink / Downlink) (MHz)
2	1850-1910 / 1930-1990
4	1710-1755 / 2110-2155
5	824-849 / 869-894

2G (GSM) Bands/Frequencies

Band	Frequencies (Uplink / Downlink) (MHz)
2	1850-1910 / 1930-1990
5	824-849 / 869-894

Antennas ..... 2x internal (Primary + Diversity) to support 2x2 MIMO
SIM ..... eUICC chip
Operating Temperature ..... -30°C to +70°C

Bluetooth® Communications
Frequencies ..... 2402 – 2480 MHz
Version ..... BLE 5.0
Antenna ..... internal

LET'S DO THE WORK.™

www.cat.com/electricpower
©2021 Caterpillar
All rights reserved.
Materials and specifications are subject to change without notice.
The International System of Units (SI) is used in this publication.
CAT, CATERPILLAR, LET'S DO THE WORK, their respective logos, "Caterpillar Corporate Yellow" the "Power Edge" and Cat "Modern Hex" trade dress as well as corporate and product identity used herein, are trademarks of Caterpillar and may not be used without permission.

Battery Charger

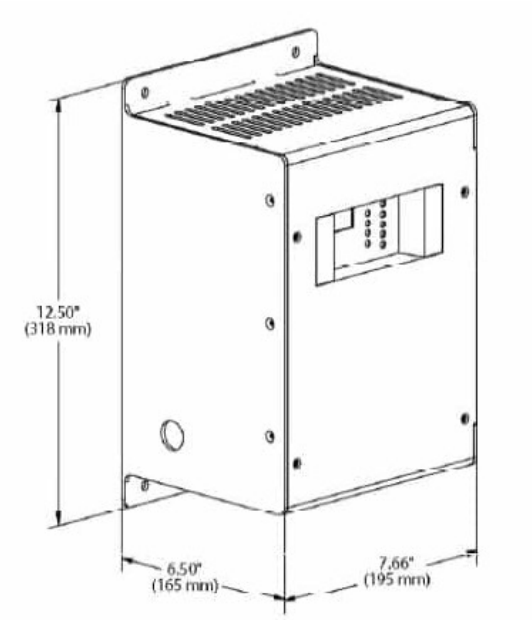

Image Shown may not Reflect Actual Package.

UL 10 Amp

Battery Charger

This battery charger offers accurate, automatic charging of lead-acid and nickel cadmium batteries. The output voltage automatically adjusts to changing input, load, battery and ambient conditions. This prevents battery over-charging and consequent loss of battery electrolyte.

Standard features include AC line compensation, precision voltage regulation, current limiting, automatic 2-rate charging, voltmeter and ammeter, temperature compensation and UL Listing.

The user interface is easy to understand with digital metering, NFPA 110 alarms and a battery fault alarm.

Features

- Electronically current limited at 105% of rated output
- Alarm system
- Digital display
- Lightning and voltage transient protection
- Protection of connected equipment against load dump protection
- Constant voltage, current limited, 4-rate automatic equalization
- IP 20 housing
- Temperature compensation
- On board temperature sensor with remote port
- Auto AC line compensation
- Output regulated by sensed battery voltage

Standards

- C-UL listed to UL 1236
- NFPA 70, NFPA 110
- CSA 22.2 No 107 certified
- CE DOC to EN 60335
- IBC Seismic Certification

Battery Charger

Specifications

Input supply	110 – 120 V 208 – 240 V
AC and DC fuses	2 input and 2 output)
Output voltage	24V
Output amps	10
Frequency	50 / 60 Hz
Operating temperature	-20°C (-4°F) to +60°C (140°F)
Housing constructed of rustproof anodized Aluminum	

Dimensions			
Width	Depth	Height	Weight
195 mm (7.66 in)	165 mm (6.5 in)	318 mm (12.5 in)	10.4 kg (23 lb)

NFPA 110 alarm package as follows:

- AC on Green led (indication)
- AC fail Red led and form C contact (2A)
- Float mode LED
- Fast charge LED
- Temp comp active LED
- Low battery volts Red led and Form C conta
- High Battery Volts Red led and Form C conta
- Charger fail Red led and Form C conta
- Battery fault Red led and Form C conta
- Battery disconnected
- Battery polarity reversed
- Mismatched charger battery voltage
- Open or high resistance charger to battery connection
- Open battery cell or excessive internal resistance

Feature Codes:

BTC1024 BTC1028 BTC1035 BTC1025 BTC1032

Information contained in this publication may be considered confidential. Discretion is recommended when distributing.
Materials and specifications are subject to change without notice.

CAT, CATERPILLAR, LET'S DO THE WORK, their respective logos, "Caterpillar Yellow," the "Power Edge" and Cat "Modern Hex" trade dress as well as corporate and product identity used herein, are trademarks of Caterpillar and may not be used without permission.

©2019 Caterpillar
All rights reserved.

Cat® Batteries



Cat Batteries – Greater Starting Power – Lower Maintenance – Longer Life

Cat Premium High Output (PHO) batteries are used in all Caterpillar Machines and Engine Gen-Sets. They are designed to meet stringent Caterpillar design specifications, which provide industry leading cold cranking amp (CCA) capability and maximum vibration resistance.

Maintenance Free or low maintenance designs are available in wet and dry configurations.

General Service Line batteries are available in Maintenance Free or low maintenance designs and in wet or dry configurations. Wide selections of BCI group sizes are available for automotive, light truck, bus, industrial, agricultural, marine, recreational and valve regulated (VRLA-AGM & Gel) applications.

Caterpillar. The difference counts.™

Cat Dealers define world – class product support. We offer you the right parts and service solutions, when and where you need them.

The Cat Dealer network of highly trained experts keeps your entire fleet up and running to maximize your equipment investments.

CATERPILLAR®

World's Toughest Batteries



Premium High Output – Maximum Vibration Resistance

- Vibration Resistance...five times the Industry Standard
- Exclusive "flat top" BCI group 4D & 8D batteries are Maintenance Free and have the industries highest cold cranking amps (CCA)
- Popular BCI group 31 Maintenance Free batteries with industry leading cold cranking amps...up to 1000 (CCA), for electric power, machine or on-highway truck and bus applications. Deep cycle models available for truck, marine or recreational usage

Specifications for Cat Premium High Output Batteries – Available Worldwide

									BCI Overall Dimensions			Nominal Weight	
BCI Group Size	Part No.	Cold Cranking Amps"	Reserve Capacity Minutes'	Volts	Amp Hr. Capacity @ 20 Hrs.	Construction	Add Water Maintenance Check Hours	Length In (mm)	Width In (mm)	Height In (mm)	Wet Lb (kg)	Dry Lb (kg)	Nominal Acid to Fill Qt (liter)
8D	153-5720	1500	465	12	210	C	MF	20.47 (520)	10.8 (275)	9.76 (248)	132 (60)	–	–
8D	101-4000	1400	400	12	190	LAC+	1000	20.7 (526.5)	10.96 (278)	9.76 (248)	132 (60)	86 (39)	18.0 (17.0)
4D	153-5710	1400	425	12	200	C	MF	20.47 (520)	8.58 (218)	9.76 (248)	119 (54)	–	–
4D	153-5700	1125	305	12	145	C	MF	20.47 (520)	8.58 (218)	9.76 (248)	101 (46)	–	–
4D	9X-9730	1300	400	12	190	LAC+	1000	20.75 (527)	8.58 (218)	9.76 (248)	119 (54)	81 (37)	14.8 (14.0)
4D	9X-9720	1000	275	12	140	LAC+	1000	20.75 (527)	8.58 (218)	9.76 (248)	101 (46)	59 (27)	15.9 (15.0)
31	175-4390	1000	180	12	90	C/S	MFA	12.9 (328.4)	6.74 (171.2)	9.29 (236)	60 (27)	–	–
31	175-4370	825	190	12	100	C/S**	MFA	12.9 (328.4)	6.74 (171.2)	9.29 (236)	60 (27)	–	–
31	175-4360	710	185	12	100	C/S***	MFA	12.9 (328.4)	6.74 (171.2)	9.29 (236)	60 (27)	–	–
31	**250-0480**	710	185	12	100	C/SDT***	MF	12.9 (328.4)	6.74 (171.2)	9.29 (236)	60 (27)	–	–
(2) 31	115-2422	1000	170	12	90	C SAE	MFA	12.9 (328.4)	6.74 (171.2)	9.46 (240.3)	60 (27)	–	–
31	115-2421	950	170	12	90	C SAE +	MFA	12.9 (328.4)	6.74 (171.2)	9.46 (240.3)	60 (27)	44 (20)	6.6 (6.2)
31	9X-3404	950	165	12	100	C SAE	MF	13 (330.2)	6.77 (172)	9.46 (240.3)	58 (26)	–	–
31	3T-5760	750	165	12	100	C SAE	MF	13 (330.2)	6.77 (172)	9.46 (240.3)	55 (25)	–	–
24	153-5656	650	110	12	52	SC	MF	10.98 (278.9)	6.85 (174)	9.0 (229.1)	39 (18)	–	–
65	230-6368	880	140	12	80	SC	MF	11.9 (303.4)	7.5 (190.8)	7.5 (191.4)	45.5 (21)	–	–
74	153-5660	650	110	12	52	SC*	MF	10.98 (278.9)	7.0 (178.2)	8.15 (206.9)	39 (18)	–	–
58	175-4280	500	70	12	35	SC	MF	9.96 (253.1)	7.2 (182.5)	6.9 (176)	31 (14)	–	–
2	153-5690	765	210	6	90	LAC+	1000	10.24 (260)	6.8 (173)	8.72 (221.6)	37 (17)	22 (10)	4.8 (4.5)

Construction Notes:
LAC = Low Maintenance, Hybrid Construction
C = Calcium Lead Alloy Grid Design
MF = Maintenance Free
MFA = Maintenance Free with Accessible Vent Caps
S = Stud Terminals
+ = Shipped Dry Only
* = Side Terminals
** = Starting and Deep Cycle Battery
*** = Deep Cycle and Starting Battery
" = For 30 seconds at 0° F (-18° C)
' = Minimum of 25 amp output at 80° F (27° C)
SAE = Uses SAE Posts
SDT = Dual, Top mounted Terminals, Stud and SAE Post, Marine Deep Cycle/Starting Battery
SC = Silver (Ag) Calcium Alloy Grids for resistance to high underhood temperatures

Rugged Design – Built Tough – Reliable Starting

- Positive and Negative plates are anchored to container bottom and locked at the top of cell element for maximum vibration resistance.
- Heavy-duty forged terminal post bushings provide maximum strength and resistance to acid seepage.
- Hefty full-frame grids, no sharp edges, optimum acid/paste combination provides better charge acceptance after deep discharge.
- Manifold vented cover with built-in Flame Arrestor…a safety feature that directs corrosive gases away from the battery and hold-downs.
- Thick, robust container resists rugged treatment typical of heavy-duty commercial use. Embossed part number & descriptors for easy serviceability.

Cat Batteries

Heavy-duty Forged Terminal Post Bushings

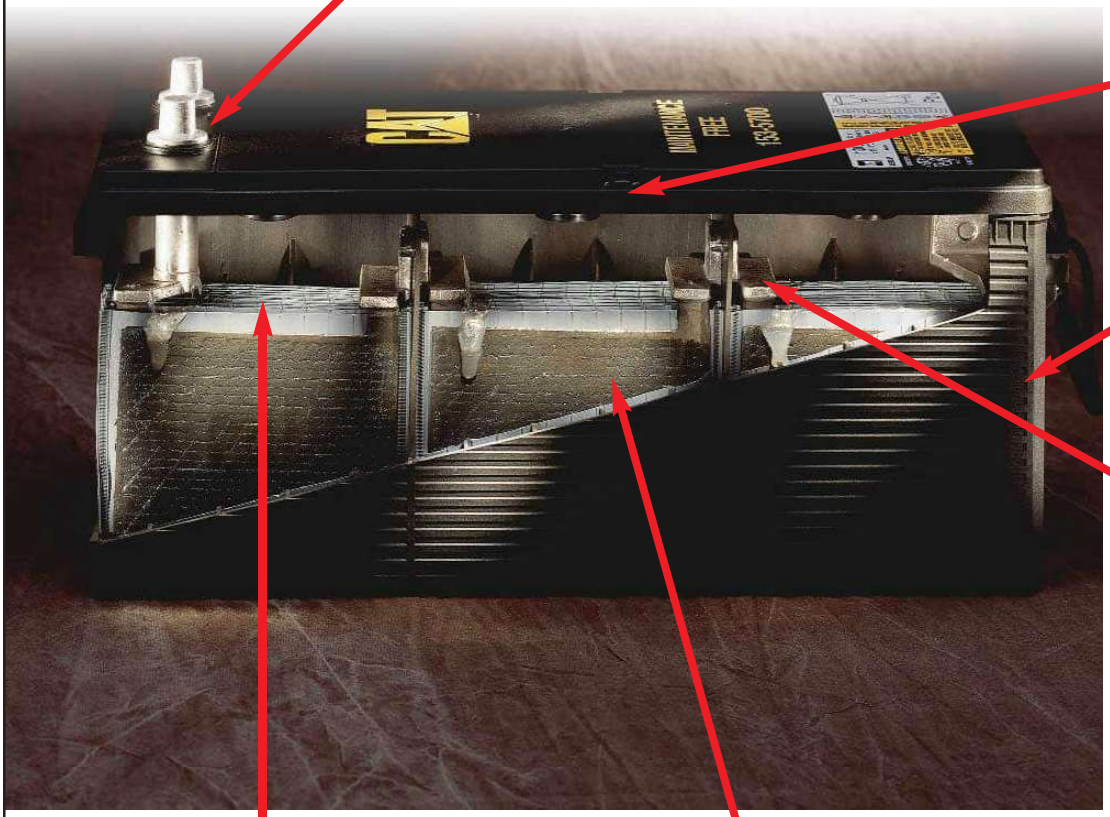

Built-in Flame Arrestor

Robust Reinforced Case

Vibration Resistant Plates & Elements

Heavy-duty Grids

Rugged Separators

Robust Components = Long Life + Reliable Starts

- Heavy-duty forged terminal post bushings provide maximum strength and resistance to acid seepage that causes corrosion and black posts. Thicker internal terminal posts provide lower electrical resistance and higher cold cranking amp output.
- Rugged microporous polyethylene envelope separators protect against “shorts” and vibration damage. Deep Cycle batteries utilize double insulated Glass mat separators for longer cycling life.
- Maintenance Free batteries utilize calcium lead alloy on both positive and negative plates that reduces gassing and water consumption. Automotive batteries have Silver (Ag) Calcium Alloy Grids for resistance to high underhood temperatures.
- Heavy-duty, full frame battery grids with no sharp edges. An optimum acid/paste combination provides better charge acceptance after a deep discharge.
- Positive and Negative plates are anchored to the container bottom and the cell element is locked at the top for maximum vibration resistance. Straps are thicker, heavier and cast (not welded) into the plates.
- Manifold vented cover with built-in Flame Arrestor…a safety feature that directs corrosive gases away from the battery and hold-downs.
- Robust reinforced case provides extra strength in all temperature extremes. Brickwork design on sides reduces chance of punctures and case flexing. Embossed part number and descriptors for easy serviceability.

CAT, CATERPILLAR, their respective logos and “Caterpillar Yellow,” as well as corporate and product identity used herein, are trademarks of Caterpillar and may not be used without permission.

For more information, see us today or visit our web site at www.cat.com

Caterpillar. The difference counts.™

CATERPILLAR®

PEHJ0073-01 Printed in the U.S.A.
© 2005 Caterpillar All Rights Reserved

Cat® DEO™

Diesel Engine Oil for North America (Canada, Mexico, United States).

SAE 15W-40, SAE 10W-30



Recommended Use

- Cat earthmoving, commercial, marine* and on-highway truck diesel engines
- Low-emission diesel engines including Cat engines with ACERT® Technology
- Heavy-duty diesel engines made by other manufacturers that recommend API CI-4 PLUS, CH-4 or CG-4 category oil (See "Typical Characteristics" on page 2 for more information)
- Automotive gasoline engines that require API SL category oils

* Excluding 3600, C280, 3126 and 3116 MUI Marine and MaK diesel engines. The 3116 and 3126 MUI Marine diesel engines with closed crankcase ventilation systems should use Cat SAEO™.

Discover the Difference

Cat DEO is developed, tested and approved by Caterpillar to meet the same high standards as all Genuine Cat Parts.

Factory-Fill—Used as standard factory-fill for Cat machines.

Increased Engine Life—Resists oxidation and prevents build-up of deposits on pistons and rings.

Longer Intervals—Extends oil drain intervals while providing excellent engine protection and performance when used in conjunction with our S•O•S℠ Services oil analysis program.

Proven Performance—Tested thoroughly in Cat diesel engines including Cat engines with ACERT Technology to ensure excellent engine life and performance.

Long-Lasting Protection—Improved soot control and enhanced shear stability enable oil to maintain proper viscosity for longer operating periods in Cat engines with ACERT Technology, especially those equipped with HEUI systems.

Caterpillar. The difference counts.™

Cat Dealers define world-class product support. We offer you the right parts and service solutions, when and where you need them.

The Cat Dealer network of highly trained experts keeps your entire fleet up and running to maximize your equipment investment.

CATERPILLAR®

Cat DEO

Cat DEO Performance

Performance Requirements	Test	Commercial ECF-1	Cat DEO
Cat 3406E Endurance Test	Cat Proprietary		
Cat C13 ACERT Endurance Test	Cat Proprietary		
Cat 3500 Series Test	Cat Proprietary		
Cat C13 ACERT Wheel Loader Test	Cat Proprietary		
Improved Soot-Viscosity & Shear Control			
High Temperature Shear			
Elastomer Compatibility			
Piston ring & Cylinder liner wear			
Valve train wear, sludge, oil filter plugging			
Aeration Control			
Bearing Corrosion			
Cam roller follower pin wear			
Copper, lead and tin erosion			
Foaming Control			
Viscosity Shear loss			
Viscosity Increase from soot			
Oxidation			
Piston deposits and oil control			

Tested Beyond Industry Standards

In addition to the tests required for the ECF-1 classification, Cat DEO undergoes four proprietary multi-cylinder endurance tests, a variety of quality assurance tests and thousands of hours of field service. Only when it has passed all these tests can it be approved by Caterpillar. The chart to the left indicates the differences between ECF-1 standards and the proprietary standards of Caterpillar.

Typical Characteristics*

SAE Viscosity Grade	15W-40	10W-30
API Service Classification		
Diesel	CI-4 PLUS, CI-4, CH-4, CG-4,CF-4/CF	CI-4, CH-4, CG-4, CF-4/CF
Gasoline	SL	SL
OEM Performance Level:		
Caterpillar	ECF-1	ECF-1
Volvo	VDS-3	VDS-2
DDC	93K214	
Cummins	CES 20071/76/78	CES 20071/76
Mack	EO-NPP '03, EO-M Plus	EO-M Plus
Flash Point, °C (ASTM D92)	224	227
Pour Point, °C (ASTM D97)	-30	-33
Viscosity		
cSt @ 40°C (ASTM D445)	120.5	76
cSt @ 100°C (ASTM D445)	15.5	11.5
Viscosity Index (ASTM D2270)	135	145
Sulfated Ash, % wt. (ASTM D874)	1.3	1.3
TBN (ASTM D2896)	11.3	11.3
Zinc, % wt. (ASTM D4951)	0.146	0.146
Gravity @ 16°C		
API (ASTM D287)	29.3	31.8
Specific	0.880	0.867

*The values shown are typical values and should not be used as quality control parameters to either accept or reject product. Specifications are subject to change without notice.

Other Recommended Oils

Cat DEO SYN™ 5W-40

For engines that must be started in extremely low temperatures down to -30°C(-22°F) consider using Cat DEO SYN 5W-40. This is a full synthetic diesel engine oil.

S•O•S Services for early problem detection

Protect your investment with Cat S•O•S oil analysis, the ultimate detection and diagnostic tool for your equipment. S•O•S helps you detect potential problems before they can lead to major failures and costly, unscheduled downtime.

Cat Filters: Complete protection for your machine

Combine Cat Fluids with Cat Filters for the highest level of contamination control and protection for your machine. We recommend Cat Filters for all Cat machine applications.

Health and Safety

Under normal conditions of intended use, this product does not pose a risk to health. Excessive exposure may result in eye, skin or respiratory irritation. Always observe good hygiene measures. Read and understand the Material Safety Data Sheet (MSDS) before using this product. For a copy of the MSDS, visit us on the web at www.catmsds.com.

CATERPILLAR®

PEHJ0059-02 www.cat.com © 2006 Caterpillar All Rights Reserved Printed in USA

Cat® ELC

Extended Life Coolant for Caterpillar and original equipment manufacturer (OEM) diesel and gasoline engines

50/50 Premix



Recommended Use

Cat ELC meets or exceeds the requirements of the following specifications and guidelines:

- Cat EC-1
- TMC RP-329
- TMC RP-338
- ASTM D-3306
- ASTM D-6210
- SAE J1034

Cat ELC also meets the performance requirements of Cummins, Detroit Diesel, International, Mack and Volvo.

Discover the Difference

Cat ELC is developed, tested and approved by Caterpillar to meet the same high standards as all Genuine Cat Parts.

- Factory-Fill—Used as standard factory-fill for all Cat machine cooling systems.
- Lower Maintenance Costs—Reduces engine coolant and additive costs by as much as 500% compared to conventional coolants. It eliminates the need for supplemental coolant additives, extends coolant change-out intervals and reduces disposal requirements.
- Advanced Metal Protection—Incorporates an advanced formula technology with organic acid additive corrosion inhibitors, such as a combination of mono and dicarboxylates for maximum protection of copper, solder, brass, steel, cast iron and aluminum.

CATERPILLAR®

Cat ELC for Maximum Coolant Life

Cat DEAC™

3000 Hour Life or
333,000 km (200,000 miles)
Cat Supplemental Coolant Additives Every 250 Hours
or 25,000 km (15,000 miles)

Cat ELC (Machines and Commercial Engines)

Cat Extender Every 6000 Hours*

12,000 Hour Life or 6 Years**
(whichever comes first)

Cat ELC (Truck Engines)

Cat Extender Every 500,000 km (300,000 miles)* **1,000,000 km (600,000 miles) or 6 Years****
(whichever comes first)

* Or one-half of the coolant service life.

** These coolant change intervals are only possible with annual S•O•S Level 2 coolant sampling and analysis.

Typical Characteristics*

Color	Strawberry Red
Boiling protection with 15 psi (1 bar) radiator cap	
50% Cat ELC/50% water	129°C (265°F)
60% Cat ELC/40% water (ELC concentrate added)	132°C (270°F)
Freezing protection	
50% Cat ELC/50% water	-37°C (-34°F)
60% Cat ELC/40% water (ELC concentrate added)	-52°C (-62°F)
Nitrite (50% solution)	500 ppm
Molybdate (50% solution)	530 ppm

*The values shown are typical values and should not be used as quality control parameters to either accept or reject product. Specifications are subject to change without notice.

S•O•S℠ services for early problem detection

Protect your investment with Cat S•O•S Coolant Analysis, the ultimate detection and diagnostic tool for your equipment. We recommend S•O•S Level 1 Coolant Analysis according to the engine's Operation and Maintenance Manual, and Level 2 Coolant Analysis annually for all your Cat equipment.

Cat ELC Extender for Longer Life

- Exceeds Cat EC-1 performance requirements
- Protects against cylinder liner/block pitting and cavitation erosion
- Should be added at 500,000 km (300,000 miles) for Cat powered on-highway trucks and 6,000 hours for commercial engines
- Extender is only necessary once during the life of the coolant
- Ensures Cat ELC performance to 1,000,000 km (600,000 miles) or 12,000 hours

Cat ELC Extender and Flush Intervals

Cat ELC Extender should be added after 6,000 hours or 300,000 miles (500,000 km) of operation, and the system should be drained and flushed with clean water after 12,000 hours or 600,000 miles (1,000,000 km). No cleaning agents are needed. If S•O•S℠ Services are used regularly, safe operation with Cat ELC may extend beyond 12,000 hours.

Health and Safety

Under normal conditions of intended use, this product does not pose a risk to health. Excessive exposure may result in eye, skin or respiratory irritation. Always observe good hygiene measures. Read and understand the Material Safety Data Sheet (MSDS) before using this product. For a copy of the MSDS, visit us on the web at www.catmsds.com.

CAT® DEALERS DEFINE WORLD-CLASS PRODUCT SUPPORT.

We offer you the right parts and service solutions, when and where you need them.

The Cat Dealer network of highly trained experts can help you maximize your equipment investment.



PEHJ0067-02
www.cat.com

© 2007 Caterpillar • All Rights Reserved • Printed in USA
CAT, CATERPILLAR, their respective logos, "Caterpillar Yellow" and the POWER EDGE trade dress, as well as corporate and product identity used herein, are trademarks of Caterpillar and may not be used without permission.

CATERPILLAR®
TODAY'S WORK. TOMORROW'S WORLD.™

GENERATOR DATA

NOVEMBER 12, 2024

For Help Desk Phone Numbers Click here

Selected Model

Engine: C15	**Generator Frame:** LC7034J	**Genset Rating (kW):** 500.0	**Line Voltage:** 480
Fuel: Diesel	**Generator Arrangement:** 4183887	**Genset Rating (kVA):** 625.0	**Phase Voltage:** 277
Frequency: 60	**Excitation Type:** Permanent Magnet	**Pwr. Factor:** 0.8	**Rated Current:** 751.8
Duty: STANDBY	**Connection:** SERIES STAR	**Application:** EPG	**Status:** Current

Version: 41205 /40001 /41431 /8568

Spec Information

Generator Specification

Frame: LC7034J **Type:** LC **No. of Bearings:** 1
Winding Type: RANDOM WOUND **Flywheel:** 14.0
Connection: SERIES STAR **Housing:** 1
Phases: 3 **No. of Leads:** 12
Poles: 4 **Wires per Lead:** 2
Sync Speed: 1800 **Generator Pitch:** 0.6667

Generator Efficiency

Per Unit Load	kW	Efficiency %
0.25	125.0	91.0
0.5	250.0	93.5
0.75	375.0	94.4
1.0	500.0	94.4

Reactances	Per Unit	Ohms
SUBTRANSIENT - DIRECT AXIS X''_d	0.1028	0.0379
SUBTRANSIENT - QUADRATURE AXIS X''_q	0.1183	0.0436
TRANSIENT - SATURATED X'_d	0.1289	0.0475
SYNCHRONOUS - DIRECT AXIS X_d	2.6302	0.9696
SYNCHRONOUS - QUADRATURE AXIS X_q	1.5788	0.5820
NEGATIVE SEQUENCE X_2	0.1107	0.0408
ZERO SEQUENCE X_0	0.0076	0.0028

Time Constants	Seconds
OPEN CIRCUIT TRANSIENT - DIRECT AXIS T'_{d0}	2.0390
SHORT CIRCUIT TRANSIENT - DIRECT AXIS T'_d	0.1000
OPEN CIRCUIT SUBSTRANSIENT - DIRECT AXIS T''_{d0}	0.0130
SHORT CIRCUIT SUBSTRANSIENT - DIRECT AXIS T''_d	0.0100
OPEN CIRCUIT SUBSTRANSIENT - QUADRATURE AXIS T''_{q0}	0.1330
SHORT CIRCUIT SUBSTRANSIENT - QUADRATURE AXIS T''_q	0.0100
EXCITER TIME CONSTANT T_e	0.0300
ARMATURE SHORT CIRCUIT T_a	0.0150

Short Circuit Ratio: 0.45	Stator Resistance = 0.0089 Ohms	Field Resistance = 0.357 Ohms

Voltage Regulation

Voltage level adjustment: +/-	5.0%
Voltage regulation, steady state: +/-	0.5%
Voltage regulation with 3% speed change: +/-	0.5%
Waveform deviation line - line, no load: less than	2.0%
Telephone influence factor: less than	50

Generator Excitation

	No Load	Full Load, (rated) pf	
		Series	Parallel
Excitation voltage:	9.96 Volts	39.15 Volts	Volts
Excitation current	0.83 Amps	2.68 Amps	Amps

Selected Model

Engine: C15	**Generator Frame:** LC7034J	**Genset Rating (kW):** 500.0	**Line Voltage:** 480
Fuel: Diesel	**Generator Arrangement:** 4183887	**Genset Rating (kVA):** 625.0	**Phase Voltage:** 277
Frequency: 60	**Excitation Type:** Permanent Magnet	**Pwr. Factor:** 0.8	**Rated Current:** 751.8
Duty: STANDBY	**Connection:** SERIES STAR	**Application:** EPG	**Status:** Current

Version: 41205 /40001 /41431 /8568

Generator Mechanical Information

Center of Gravity

Dimension X	-643.0 mm	-25.3 IN.
Dimension Y	0.0 mm	0.0 IN.
Dimension Z	0.0 mm	0.0 IN.

- "X" is measured from driven end of generator and parallel to rotor. Towards engine fan is positive. See General Information for details
- "Y" is measured vertically from rotor center line. Up is positive.
- "Z" is measured to left and right of rotor center line. To the right is positive.

Generator WT = 1550 kg	* Rotor WT = 579 kg	* Stator WT = 971 kg
3,417 LB	1,276 LB	2,141 LB

Rotor Balance = 0.0508 mm deflection PTP

Overspeed Capacity = 125% of synchronous speed

Generator Torsional Data

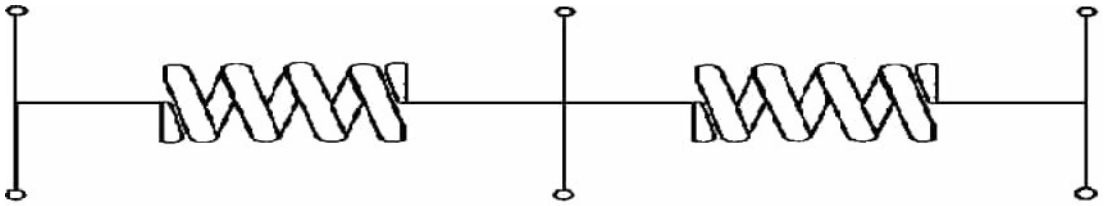

J1 = Coupling and Fan | **J2 = Rotor** | **J3 = Exciter End**

TOTAL J = J1 + J2 + J3

K1 = Shaft Stiffness between J1 + J2 (Diameter 1)			**K2 = Shaft Stiffness between J2 + J3 (Diameter 2)**			
J1	**K1**	**Min Shaft Dia 1**	**J2**	**K2**	**Min Shaft Dia 2**	**J3**
7.6 LB IN. s^2	75.2 MLB IN./rad	5.7 IN.	70.1 LB IN. s^2	73.3 MLB IN./rad	5.5 IN.	3.3 LB IN. s^2
0.86 N m s^2	8.5 MN m/rad	145.0 mm	7.92 N m s^2	8.28 MN m/rad	140.0 mm	0.37 N m s^2

Total J

81.0 LB IN. s^2

9.15 N m s^2

Selected Model

Engine: C15	**Generator Frame:** LC7034J	**Genset Rating (kW):** 500.0	**Line Voltage:** 480
Fuel: Diesel	**Generator Arrangement:** 4183887	**Genset Rating (kVA):** 625.0	**Phase Voltage:** 277
Frequency: 60	**Excitation Type:** Permanent Magnet	**Pwr. Factor:** 0.8	**Rated Current:** 751.8
Duty: STANDBY	**Connection:** SERIES STAR	**Application:** EPG	**Status:** Current

Version: 41205 /40001 /41431 /8568

Generator Cooling Requirements - Temperature - Insulation Data

Cooling Requirements:		**Temperature Data: (Ambient 40 ^{0}C)**	
Heat Dissipated:	29.7 kW	**Stator Rise:**	105.0 ^{0}C
Air Flow:	72.0 m^3/min	**Rotor Rise:**	105.0 ^{0}C

Insulation Class: H

Insulation Reg. as shipped: 100.0 MΩ minimum at 40 ^{0}C

Thermal Limits of Generator

Frequency:	60 Hz
Line to Line Voltage:	480 Volts
B BR 80/40	704.0 kVA
F BR -105/40	800.0 kVA
H BR - 125/40	880.0 kVA
F PR - 130/40	880.0 kVA
H PR - 150/40	933.0 kVA
H PR27 - 163/27	968.0 kVA

Selected Model

Engine: C15	**Generator Frame:** LC7034J	**Genset Rating (kW):** 500.0	**Line Voltage:** 480
Fuel: Diesel	**Generator Arrangement:** 4183887	**Genset Rating (kVA):** 625.0	**Phase Voltage:** 277
Frequency: 60	**Excitation Type:** Permanent Magnet	**Pwr. Factor:** 0.8	**Rated Current:** 751.8
Duty: STANDBY	**Connection:** SERIES STAR	**Application:** EPG	**Status:** Current

Version: 41205 /40001 /41431 /8568

Starting Capability & Current Decrement
Motor Starting Capability (0.6 pf)

SKVA	Percent Volt Dip
119	2.5
245	5.0
377	7.5
517	10.0
664	12.5
821	15.0
987	17.5
1,163	20.0
1,350	22.5
1,550	25.0
1,764	27.5
1,993	30.0
2,239	32.5
2,504	35.0
2,791	37.5
3,101	40.0

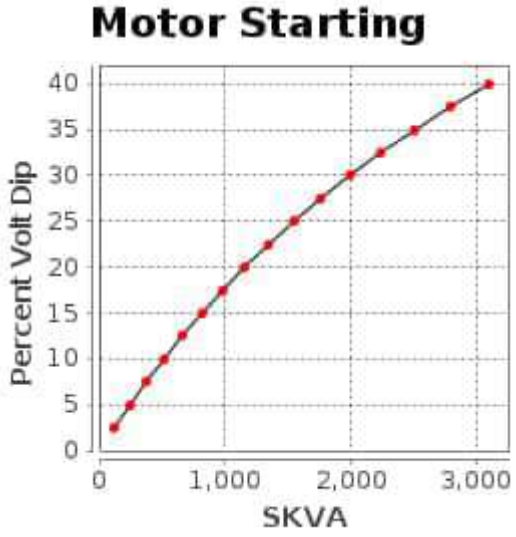

Current Decrement Data

E Time Cycle	AMP
0.0	7,275
1.0	5,267
2.0	4,327
3.0	3,680
4.0	3,161
5.0	2,726
7.5	2,636
10.0	3,186
12.5	3,516
15.0	3,701
20.0	3,575
25.0	3,320
30.0	3,190
35.0	3,146
40.0	3,140
45.0	3,147

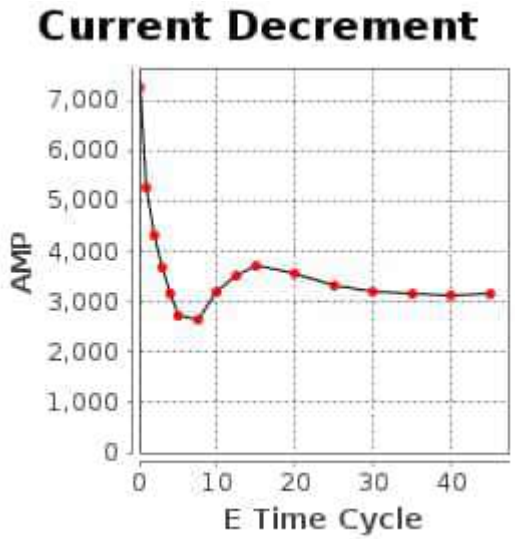

Instantaneous 3 Phase Fault Current: 7275 Amps **Instantaneous Line - Line Fault Current:** 6070 Amps

Instantaneous Line - Neutral Fault Current: 10157 Amps

Selected Model

Engine: C15	**Generator Frame:** LC7034J	**Genset Rating (kW):** 500.0	**Line Voltage:** 480
Fuel: Diesel	**Generator Arrangement:** 4183887	**Genset Rating (kVA):** 625.0	**Phase Voltage:** 277
Frequency: 60	**Excitation Type:** Permanent Magnet	**Pwr. Factor:** 0.8	**Rated Current:** 751.8
Duty: STANDBY	**Connection:** SERIES STAR	**Application:** EPG	**Status:** Current

Version: 41205 /40001 /41431 /8568

Generator Output Characteristic Curves
Open Circuit Curve

Field Current	Line - Line Volt
0.0	0
17.2	288
20.3	336
23.8	384
28.2	432
34.6	480
46.1	528
69.5	576
120.9	624
238.6	672

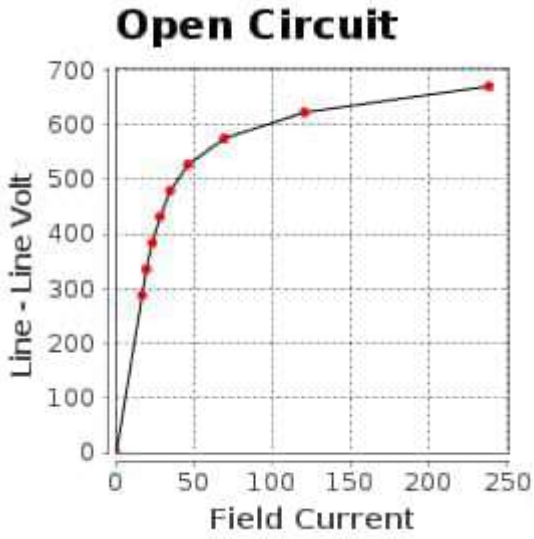

Short Circuit Curve

Field Current	Armature Current
0.0	0
44.8	451
52.3	526
59.8	601
67.3	677
74.7	752
82.2	827
89.7	902
97.1	977
104.6	1,052

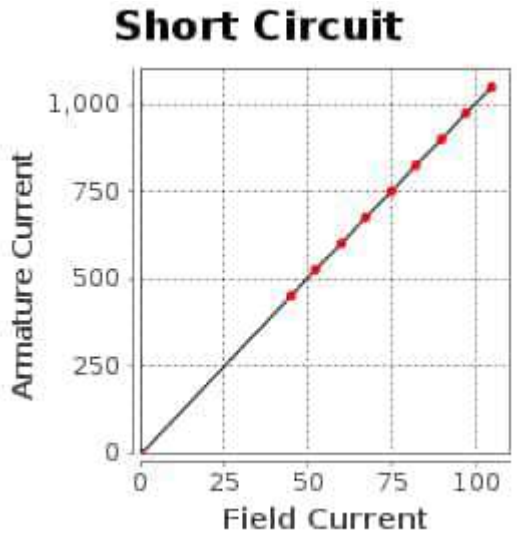

Selected Model

Engine: C15	**Generator Frame:** LC7034J	**Genset Rating (kW):** 500.0	**Line Voltage:** 480
Fuel: Diesel	**Generator Arrangement:** 4183887	**Genset Rating (kVA):** 625.0	**Phase Voltage:** 277
Frequency: 60	**Excitation Type:** Permanent Magnet	**Pwr. Factor:** 0.8	**Rated Current:** 751.8
Duty: STANDBY	**Connection:** SERIES STAR	**Application:** EPG	**Status:** Current

Version: 41205 /40001 /41431 /8568

Generator Output Characteristic Curves
Zero Power Factor Curve

Field Current	Line - Line Volt
74.7	0
91.5	240
94.6	288
98.1	336
102.3	384
108.6	432
119.4	480
141.3	528
189.1	576
298.4	624

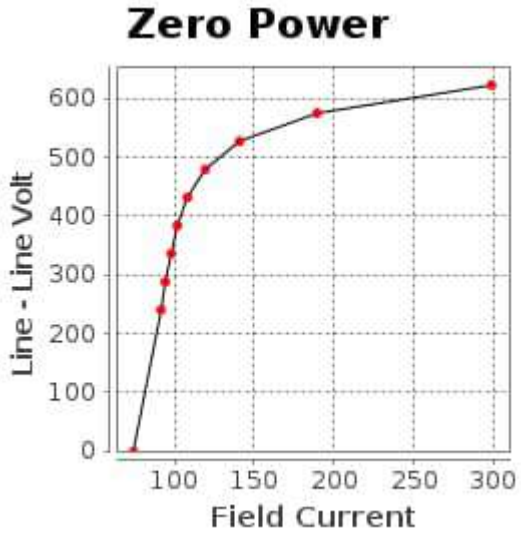

Air Gap Curve

Field Current	Line - Line Volt
0.0	0
17.0	288
19.8	336
22.6	384
25.5	432
28.3	480
31.1	528
34.0	576
36.8	624
39.6	672

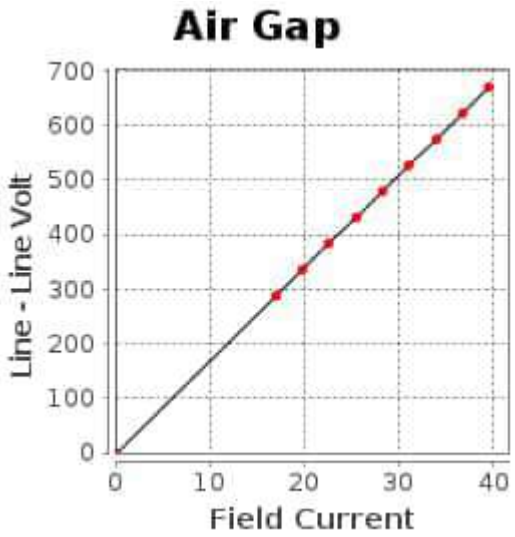

Selected Model

Engine: C15	**Generator Frame:** LC7034J	**Genset Rating (kW):** 500.0	**Line Voltage:** 480
Fuel: Diesel	**Generator Arrangement:** 4183887	**Genset Rating (kVA):** 625.0	**Phase Voltage:** 277
Frequency: 60	**Excitation Type:** Permanent Magnet	**Pwr. Factor:** 0.8	**Rated Current:** 751.8
Duty: STANDBY	**Connection:** SERIES STAR	**Application:** EPG	**Status:** Current

Version: 41205 /40001 /41431 /8568

Reactive Capability Curve

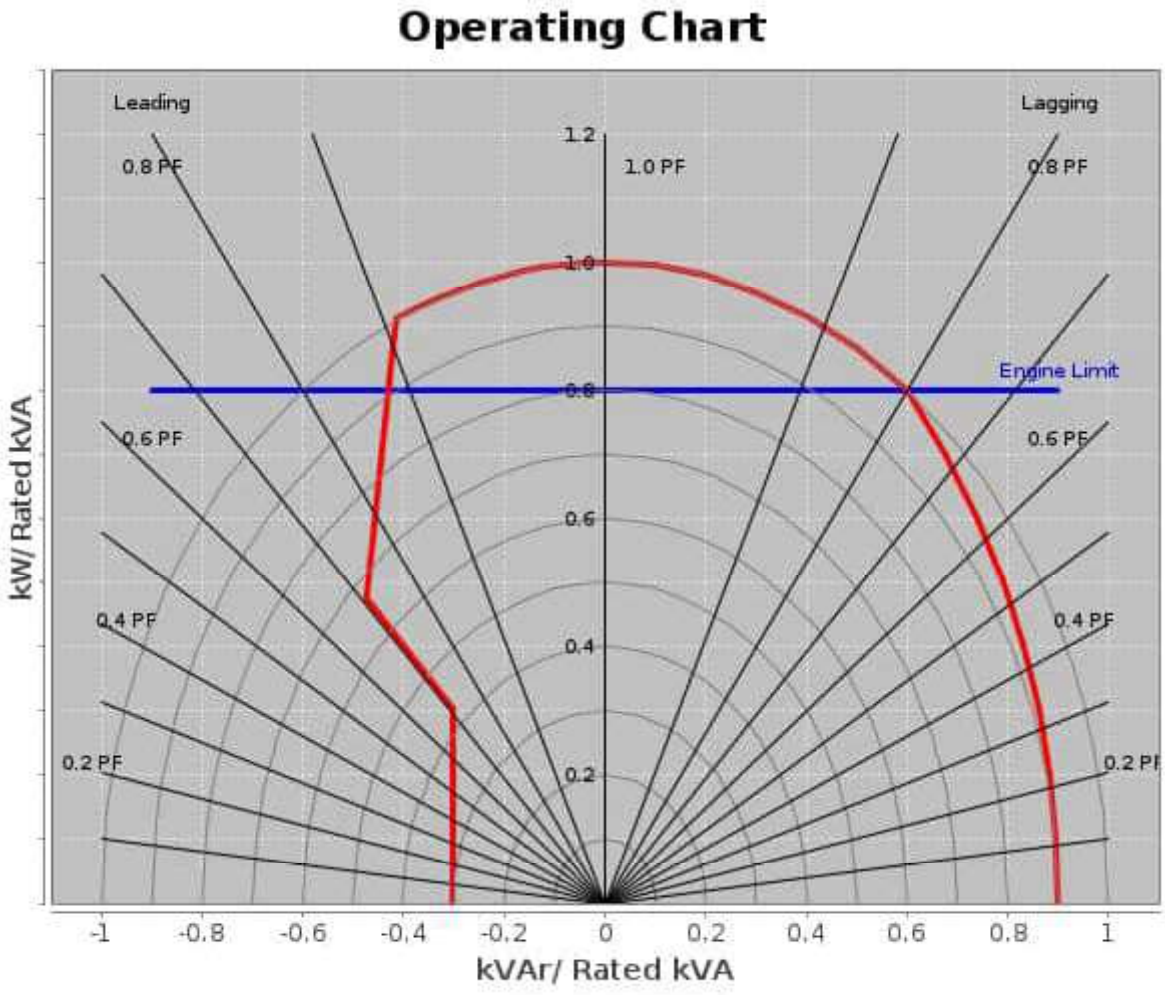

General Information

GENERATOR INFORMATION (DM7900)

---

1. Motor Starting
Motor starting curves are obtained in accordance with IEC60034, and are displayed at 0.6 power factor.

2. Voltage Dip
Prediction of the generator synchronous voltage dip can be made by consulting the plot for the voltage dip value that corresponds to the desired motor starting kVA value.

3. Definitions
A) Generator Keys
Frame: abbreviation of generator frame size
Freq: frequency in hertz.
PP/SB: prime/standby duty respectively
Volts: line - line terminal voltage
kW: rating in electrical kilo watts
Model: engine sales model

B) Generator Temperature Rise
The indicated temperature rises are the IEC/NEMA limits for standby or prime power applications. The quoted rise figures are maximum limits only and are not necessarily indicative of the actual temperature rise of a given machine winding.

C) Centre of Gravity
The specified centre of gravity is for the generator only. For single bearing, and two bearing close coupled generators, the center of gravity is measured from the generator/engine flywheel-housing interface and from the centreline of the rotor Shaft.

For two bearing, standalone generators, the center of gravity is measured from the end of the rotor shaft and from the centerline of the rotor shaft.

D) Generator Current Decrement Curves
The generator current decrement curve indicates the generator armature current arising from a symmetrical three-phase fault at the generator terminals. Generators equipped with AREP or PMG excitation systems will sustain 300% of rated armature current for 10 seconds.

E) Generator Efficiency Curves
The efficiency curve is displayed for the generator only under the given conditions of rating, voltage, frequency and power factor. This is not the overall generating set efficiency curve.

PERFORMANCE DATA[DM8155]

November 12, 2024

Performance Number: DM8155 **Change Level: 06**

SALES MODEL:	C15	**COMBUSTION:**	DIRECT INJECTION
BRAND:	CAT	**ENGINE SPEED (RPM):**	1,800
MACHINE SALES MODEL:		**HERTZ:**	60
ENGINE POWER (BHP):	762	**FAN POWER (HP):**	19.4
GEN POWER WITH FAN (EKW):	500.0	**ADDITIONAL PARASITICS (HP):**	14.2
COMPRESSION RATIO:	16.1	**ASPIRATION:**	TA
RATING LEVEL:	STANDBY	**AFTERCOOLER TYPE:**	ATAAC
PUMP QUANTITY:	1	**AFTERCOOLER CIRCUIT TYPE:**	JW+OC, ATAAC
FUEL TYPE:	DIESEL	**INLET MANIFOLD AIR TEMP (F):**	120
MANIFOLD TYPE:	DRY	**JACKET WATER TEMP (F):**	192.2
GOVERNOR TYPE:	ELEC	**TURBO CONFIGURATION:**	SINGLE
CAMSHAFT TYPE:	STANDARD	**TURBO QUANTITY:**	1
IGNITION TYPE:	CI	**TURBOCHARGER MODEL:**	GTA5518BS-56T-1.58
INJECTOR TYPE:	EUI	**CERTIFICATION YEAR:**	2006
REF EXH STACK DIAMETER (IN):	6	**PISTON SPD @ RATED ENG SPD (FT/MIN):**	2,025.0
MAX OPERATING ALTITUDE (FT):	3,281		

INDUSTRY	SUBINDUSTRY	APPLICATION
ELECTRIC POWER	STANDARD	PACKAGED GENSET
OIL AND GAS	LAND PRODUCTION	PACKAGED GENSET

General Performance Data

GENSET POWER WITH FAN	PERCENT LOAD	ENGINE POWER	BRAKE MEAN EFF PRES (BMEP)	BRAKE SPEC FUEL CONSUMPTN (BSFC)	ISO BRAKE SPEC FUEL CONSUMPTN (BSFC)	VOL FUEL CONSUMPTN (VFC)	ISO VOL FUEL CONSUMPTN (VFC)	ELEC SPEC FUEL CONSUMPTN (ESFC)	ISO ELEC SPEC FUEL CONSUMPTN (ESFC)
EKW	%	BHP	PSI	LB/BHP-HR	LB/BHP-HR	GAL/HR	GAL/HR	LB/EKW-HR	LB/EKW-HR
500.0	100	762	361	0.333	0.330	35.7	35.4	0.507	0.502
450.0	90	683	324	0.348	0.345	33.5	33.2	0.528	0.523
400.0	80	607	288	0.358	0.355	30.6	30.3	0.543	0.538
375.0	75	570	271	0.358	0.355	28.8	28.5	0.545	0.540
350.0	70	534	253	0.356	0.353	26.8	26.5	0.543	0.538
300.0	60	462	219	0.347	0.344	22.6	22.4	0.535	0.530
250.0	50	392	186	0.336	0.333	18.6	18.4	0.527	0.522
200.0	40	323	153	0.339	0.336	15.4	15.3	0.547	0.542
150.0	30	253	120	0.347	0.344	12.4	12.3	0.586	0.580
125.0	25	218	103	0.355	0.352	10.9	10.8	0.619	0.613
100.0	20	182	86	0.368	0.364	9.4	9.4	0.670	0.663
50.0	10	109	52	0.420	0.416	6.5	6.4	0.917	0.908

GENSET POWER WITH FAN	PERCENT LOAD	ENGINE POWER	INLET MFLD PRES	INLET MFLD TEMP	EXH MFLD TEMP	EXH MFLD PRES	ENGINE OUTLET TEMP	COMPRESSOR OUTLET PRES	COMPRESSOR OUTLET TEMP
EKW	%	BHP	IN-HG	DEG F	DEG F	IN-HG	DEG F	IN-HG	DEG F
500.0	100	762	68.2	120.4	1,296.3	46.8	988.0	73	405.8
450.0	90	683	67.0	119.4	1,280.7	45.9	973.8	72	402.2
400.0	80	607	61.6	115.2	1,250.1	42.3	956.6	66	381.3
375.0	75	570	56.4	111.0	1,229.5	38.8	947.8	61	361.0
350.0	70	534	50.1	106.0	1,205.6	34.6	938.3	54	336.1
300.0	60	462	36.6	95.5	1,148.6	25.6	915.7	40	282.1
250.0	50	392	24.0	86.2	1,080.0	17.4	887.9	27	229.6
200.0	40	323	16.9	83.6	1,003.8	13.3	838.1	19	195.0
150.0	30	253	11.3	81.0	910.6	10.2	768.4	13	165.5
125.0	25	218	9.1	79.8	857.1	9.0	725.6	11	152.7
100.0	20	182	7.0	78.6	795.3	8.0	674.7	9	140.6
50.0	10	109	3.3	76.2	639.0	6.1	542.9	5	118.5

General Performance Data (Continued)

GENSET POWER WITH FAN	PERCENT LOAD	ENGINE POWER	WET INLET AIR VOL FLOW RATE	ENGINE OUTLET WET EXH GAS VOL FLOW RATE	WET INLET AIR MASS FLOW RATE	WET EXH GAS MASS FLOW RATE	WET EXH VOL FLOW RATE (32 DEG F AND 29.98 IN HG)	DRY EXH VOL FLOW RATE (32 DEG F AND 29.98 IN HG)
EKW	%	BHP	CFM	CFM	LB/HR	LB/HR	FT3/MIN	FT3/MIN

500.0	100	762	1,347.7	3,869.5	6,001.8	6,255.3	1,314.2	1,190.7
450.0	90	683	1,345.2	3,807.0	5,981.4	6,219.2	1,305.8	1,188.3
400.0	80	607	1,283.7	3,578.0	5,686.7	5,904.2	1,242.2	1,133.6
375.0	75	570	1,219.4	3,368.7	5,381.2	5,585.8	1,176.8	1,074.2
350.0	70	534	1,139.2	3,114.4	5,001.5	5,191.7	1,095.3	999.6
300.0	60	462	965.5	2,567.9	4,183.5	4,344.1	918.0	837.4
250.0	50	392	799.0	2,042.2	3,407.8	3,539.6	745.1	680.1
200.0	40	323	697.8	1,709.3	2,959.9	3,069.2	647.6	593.2
150.0	30	253	615.8	1,417.7	2,601.3	2,689.1	567.6	523.1
125.0	25	218	581.8	1,286.6	2,454.7	2,532.1	533.7	493.8
100.0	20	182	551.1	1,160.5	2,322.2	2,389.2	503.0	467.8
50.0	10	109	497.4	916.4	2,088.6	2,134.4	449.4	423.6

Heat Rejection Data

GENSET POWER WITH FAN	PERCENT LOAD	ENGINE POWER	REJECTION TO JACKET WATER	REJECTION TO ATMOSPHERE	REJECTION TO EXH	EXHAUST RECOVERY TO 350F	FROM OIL COOLER	FROM AFTERCOOLER	WORK ENERGY	LOW HEAT VALUE ENERGY	HIGH HEAT VALUE ENERGY
EKW	%	BHP	BTU/MIN	BTU/MIN	BTU/MIN	BTU/MIN	BTU/MIN	BTU/MIN	BTU/MIN	BTU/MIN	BTU/MIN
500.0	100	762	10,375	5,182	28,039	17,119	4,138	6,860	32,301	77,688	82,757
450.0	90	683	9,686	4,904	27,298	16,583	3,881	6,775	28,958	72,867	77,622
400.0	80	607	8,796	4,826	25,540	15,270	3,549	6,061	25,750	66,626	70,974
375.0	75	570	8,322	4,716	24,127	14,230	3,337	5,388	24,187	62,652	66,740
350.0	70	534	7,911	4,524	22,387	13,011	3,104	4,610	22,642	58,272	62,074
300.0	60	462	7,240	4,038	18,412	10,458	2,621	3,127	19,611	49,217	52,428
250.0	50	392	6,630	3,455	14,380	8,084	2,153	1,957	16,633	40,417	43,054
200.0	40	323	5,924	2,968	11,812	6,328	1,786	1,321	13,687	33,524	35,712
150.0	30	253	5,187	2,459	9,434	4,713	1,435	880	10,732	26,935	28,692
125.0	25	218	4,807	2,196	8,319	3,963	1,264	716	9,239	23,729	25,277
100.0	20	182	4,414	1,924	7,227	3,212	1,093	577	7,727	20,530	21,869
50.0	10	109	3,615	1,370	5,008	1,677	749	353	4,629	14,057	14,974

PERFORMANCE DATA[DM8155]

Altitude Derate Data

STANDARD

ALTITUDE CORRECTED POWER CAPABILITY (BHP)

AMBIENT OPERATING TEMP (F)	30	40	50	60	70	80	90	100	110	120	130	140	NORMAL
ALTITUDE (FT)													
0	762	762	762	762	762	762	762	762	762	762	762	762	762
1,000	762	762	762	762	762	762	762	762	762	762	757	744	762
2,000	762	762	762	762	762	762	762	762	754	741	728	716	762
3,000	762	762	762	762	762	762	752	739	726	713	701	689	762
4,000	762	762	762	762	751	737	724	711	698	686	674	663	759
5,000	762	762	750	736	722	709	696	683	671	660	649	638	735
6,000	751	736	722	708	694	681	669	657	646	634	624	613	712
7,000	722	707	694	680	667	655	643	632	620	610	599	589	689
8,000	693	680	666	653	641	629	618	607	596	586	576	566	666
9,000	666	653	640	628	616	604	593	583	572	563	553	544	644
10,000	639	626	614	602	591	580	570	559	550	540	531	522	623
11,000	614	601	589	578	567	557	546	537	527	518	510	501	602
12,000	588	577	565	554	544	534	524	515	506	497	489	480	582
13,000	564	553	542	532	522	512	503	494	485	477	469	461	562
14,000	541	530	520	510	500	491	482	473	465	457	449	442	542
15,000	518	508	498	488	479	470	462	453	445	438	430	423	523

Cross Reference

Test Spec	Setting	Engine Arrangement	Engineering Model	Engineering Model Version	Start Effective Serial Number	End Effective Serial Number
0K6281	PP5612	2864923	GS282	-	FTE02794	
0K6281	PP5612	2864924	GS282	-	FTE02794	

Performance Parameter Reference

Parameters Reference:DM9600-15

PERFORMANCE DEFINITIONS

PERFORMANCE DEFINITIONS DM9600
APPLICATION:
Engine performance tolerance values below are representative of a typical production engine tested in a calibrated dynamometer test cell at SAE J1995 standard reference conditions. Caterpillar maintains ISO9001:2000 certified quality management systems for engine test Facilities to assure accurate calibration of test equipment. Engine test data is corrected in accordance with SAE J1995. Additional reference material SAE J1228, J1349, ISO 8665, 3046-1:2002E, 3046-3:1989, 1585, 2534, 2288, and 9249 may apply in part or are similar to SAE J1995. Special engine rating request (SERR) test data shall be noted.
PERFORMANCE PARAMETER TOLERANCE FACTORS:
Power +/- 3%
Torque +/- 3%
Exhaust stack temperature +/- 8%
Inlet airflow +/- 5%
Intake manifold pressure-gage +/- 10%
Exhaust flow +/- 6%
Specific fuel consumption +/- 3%
Specific fuel consumption (C7-C18) +/- 4%
Fuel rate +/- 5%
Specific DEF consumption +/- 3%
DEF rate +/- 5%
Heat rejection +/- 5%
Heat rejection exhaust only +/- 10%
Heat rejection CEM only +/- 10%
Heat Rejection values based on using treated water.
Torque is included for truck and industrial applications, do not use for Gen Set or steady state applications.

PERFORMANCE DATA[DM8155]

On C7 - C18 engines, at speeds of 1100 RPM and under these values are provided for reference only, and may not meet the tolerance listed.
On 3500 and C175 engines, at speeds below Peak Torque these values are provided for reference only, and may not meet the tolerance listed.
These values do not apply to C280/3600. For these models, see the tolerances listed below.
C280/3600 HEAT REJECTION TOLERANCE FACTORS:
Heat rejection +/- 10%
Heat rejection to Atmosphere +/- 50%
Heat rejection to Lube Oil +/- 20%
Heat rejection to Aftercooler +/- 5%
TEST CELL TRANSDUCER TOLERANCE FACTORS:
Torque +/- 0.5%
Speed +/- 0.2%
Fuel flow +/- 1.0%
Temperature +/- 2.0 C degrees
Intake manifold pressure +/- 0.1 kPa
OBSERVED ENGINE PERFORMANCE IS CORRECTED TO SAE J1995 REFERENCE
AIR AND FUEL CONDITIONS.
REFERENCE ATMOSPHERIC INLET AIR
FOR 3500 ENGINES AND SMALLER
SAE J1228 AUG2002 for marine engines, and J1995 JAN2014 for other engines, reference atmospheric pressure is 100 KPA (29.61 in hg), and standard temperature is 25deg C (77 deg F) at 30% relative humidity at the stated aftercooler water temp, or inlet manifold temp.
FOR 3600 ENGINES
Engine rating obtained and presented in accordance with ISO 3046/1 and SAE J1995 JANJAN2014 reference atmospheric pressure is 100 KPA (29.61 in hg), and standard temperature is 25deg C (77 deg F) at 30% relative humidity and 150M altitude at the stated aftercooler water temperature.
MEASUREMENT LOCATION FOR INLET AIR TEMPERATURE
Location for air temperature measurement air cleaner inlet at stabilized operating conditions.
REFERENCE EXHAUST STACK DIAMETER
The Reference Exhaust Stack Diameter published with this dataset is only used for the calculation of Smoke Opacity values displayed in this dataset. This value does not necessarily represent the actual stack diameter of the engine due to the variety of exhaust stack adapter options available. Consult the price list, engine order or general dimension drawings for the actual stack diameter size ordered or options available.
REFERENCE FUEL
DIESEL
Reference fuel is #2 distillate diesel with a 35API gravity;
A lower heating value is 42,780 KJ/KG (18,390 BTU/LB) when used at 15 deg C (59 deg F), where the density is
850 G/Liter (7.0936 Lbs/Gal).
GAS
Reference natural gas fuel has a lower heating value of 33.74 KJ/L (905 BTU/CU Ft). Low BTU ratings are based on 18.64 KJ/L (500 BTU/CU FT) lower heating value gas. Propane ratings are based on 87.56 KJ/L (2350 BTU/CU Ft) lower heating value gas.
ENGINE POWER (NET) IS THE CORRECTED FLYWHEEL POWER (GROSS) LESS
EXTERNAL AUXILIARY LOAD
Engine corrected gross output includes the power required to drive standard equipment; lube oil, scavenge lube oil, fuel transfer, common rail fuel, separate circuit aftercooler and jacket water pumps. Engine net power available for the external (flywheel) load is calculated by subtracting the sum of auxiliary load from the corrected gross flywheel out put power. Typical auxiliary loads are radiator cooling fans, hydraulic pumps, air compressors and battery charging alternators. For Tier 4 ratings additional Parasitic losses would also include Intake, and Exhaust Restrictions.
ALTITUDE CAPABILITY
Altitude capability is the maximum altitude above sea level at standard temperature and standard pressure at which the engine could develop full rated output power on the current performance data set.
Standard temperature values versus altitude could be seen on TM2001.
When viewing the altitude capability chart the ambient temperature is the inlet air temp at the compressor inlet.
Engines with ADEM MEUI and HEUI fuel systems operating at conditions above the defined altitude capability derate for atmospheric pressure and temperature conditions outside the values defined, see TM2001.
Mechanical governor controlled unit injector engines require a setting change for operation at conditions above the altitude defined on the engine performance sheet. See your Caterpillar technical representative for non standard ratings.
REGULATIONS AND PRODUCT COMPLIANCE

PERFORMANCE DATA[DM8155]

TMI Emissions information is presented at 'nominal' and 'Potential Site Variation' values for standard ratings. No tolerances are applied to the emissions data. These values are subject to change at any time. The controlling federal and local emission requirements need to be verified by your Caterpillar technical representative.
Customer's may have special emission site requirements that need to be verified by the Caterpillar Product Group engineer.
EMISSION CYCLE LIMITS:
Cycle emissions Max Limits apply to cycle-weighted averages only. Emissions at individual load points may exceed the cycle-weighted limit.
WET & DRY EXHAUST/EMISSIONS DESCRIPTION:
Wet - Total exhaust flow or concentration of total exhaust flow
Dry - Total exhaust flow minus water vapor or concentration of exhaust flow with water vapor excluded
EMISSIONS DEFINITIONS:
Emissions : DM1176
EMISSION CYCLE DEFINITIONS
1. For constant-speed marine engines for ship main propulsion, including,diesel-electric drive, test cycle E2 shall be applied, for controllable-pitch propeller sets
test cycle E2 shall be applied.
2. For propeller-law-operated main and propeller-law-operated auxiliary engines the test cycle E3 shall be applied.
3. For constant-speed auxiliary engines test cycle D2 shall be applied.
4. For variable-speed, variable-load auxiliary engines, not included above, test cycle C1 shall be applied.
HEAT REJECTION DEFINITIONS:
Diesel Circuit Type and HHV Balance : DM9500
HIGH DISPLACEMENT (HD) DEFINITIONS:
3500: EM1500
RATING DEFINITIONS:
Agriculture : TM6008
Fire Pump : TM6009
Generator Set : TM6035
Generator (Gas) : TM6041
Industrial Diesel : TM6010
Industrial (Gas) : TM6040
Irrigation : TM5749
Locomotive : TM6037
Marine Auxiliary : TM6036
Marine Prop (Except 3600) : TM5747
Marine Prop (3600 only) : TM5748
MSHA : TM6042
Oil Field (Petroleum) : TM6011
Off-Highway Truck : TM6039
On-Highway Truck : TM6038
SOUND DEFINITIONS:
Sound Power : DM8702
Sound Pressure : TM7080
Date Released : 03/12/24

Print

Systems Data
Reference Number: DM8155

November 12, 2024
For Help Desk Phone Numbers Click Here

AIR INTAKE SYSTEM		
THE INSTALLED SYSTEM MUST COMPLY WITH THE SYSTEM LIMITS BELOW FOR ALL EMISSIONS CERTIFIED ENGINES TO ASSURE REGULATORY COMPLIANCE.		
MAXIMUM ALLOWABLE INTAKE RESTRICTION WITH CLEAN ELEMENT	15	IN-H20
MAXIMUM ALLOWABLE INTAKE RESTRICTION WITH DIRTY ELEMENT	25	IN-H20
MAXIMUM PRESSURE DROP FROM COMPRESSOR OUTLET TO MANIFOLD INLET (OR MIXER INLET FOR EGR)	4.4	IN-HG
COOLING SYSTEM		
ENGINE ONLY COOLANT CAPACITY	5.5	GAL
MAXIMUM ALLOWABLE JACKET WATER OUTLET TEMPERATURE	219	DEG F
REGULATOR LOCATION FOR JW (HT) CIRCUIT	OUTLET	
MAXIMUM UNINTERRUPTED FILL RATE	5.0	G/MIN
ENGINE SPEC SYSTEM		
CYLINDER ARRANGEMENT	INLINE	
NUMBER OF CYLINDERS	6	
CYLINDER BORE DIAMETER	5.4	IN
PISTON STROKE	6.7	IN
TOTAL CYLINDER DISPLACEMENT	928	CU IN
STANDARD CRANKSHAFT ROTATION FROM FLYWHEEL END	CCW	
STANDARD CYLINDER FIRING ORDER	1-5-3-6-2-4	
NUMBER 1 CYLINDER LOCATION	FRONT	
STROKES/COMBUSTION CYCLE	4	
EXHAUST SYSTEM		
THE INSTALLED SYSTEM MUST COMPLY WITH THE SYSTEM LIMITS BELOW FOR ALL EMISSIONS CERTIFIED ENGINES TO ASSURE REGULATORY COMPLIANCE.		
MAXIMUM ALLOWABLE SYSTEM BACK PRESSURE	40	IN-H20
MANIFOLD TYPE	DRY	
FUEL SYSTEM		
MAXIMUM FUEL FLOW FROM TRANSFER PUMP TO ENGINE	111.0	G/HR
MAXIMUM ALLOWABLE FUEL SUPPLY LINE RESTRICTION	8.0	IN-HG
MAXIMUM ALLOWABLE FUEL TEMPERATURE AT TRANSFER PUMP INLET	174	DEG F
MAXIMUM FUEL FLOW TO RETURN LINE FROM ENGINE	103.0	G/HR
MAXIMUM ALLOWABLE FUEL RETURN LINE RESTRICTION	14.8	IN-HG
NORMAL FUEL PRESSURE IN A CLEAN SYSTEM	101.5	PSI
FUEL SYSTEM TYPE	MEUI	
MAXIMUM TRANSFER PUMP PRIMING LIFT WITHOUT PRIMING PUMP	12.1	FT
MAXIMUM FUEL TEMPERATURE AT ENGINE OUTLET	225	DEG F

MAXIMUM ALLOWABLE FUEL TEMPERATURE AT TRANSFER PUMP OUTLET	174	DEG F
LUBE SYSTEM		
CRANKCASE VENTILATION TYPE	TO_ATMOSPHERE	
MOUNTING SYSTEM		
CENTER OF GRAVITY LOCATION - X DIMENSION - FROM REAR FACE OF BLOCK - (REFERENCE TM7077)	22.2	IN
CENTER OF GRAVITY LOCATION - Y DIMENSION - FROM CENTERLINE OF CRANKSHAFT - (REFERENCE TM7077)	9.4	IN
CENTER OF GRAVITY LOCATION - Z DIMENSION - FROM CENTERLINE OF CRANKSHAFT - (REFERENCE TM7077)	0	IN
STARTING SYSTEM		
MINIMUM CRANKING SPEED REQUIRED FOR START	115	RPM
LOWEST AMBIENT START TEMPERATURE WITHOUT AIDS	32	DEG F

Cookie Settings

PACKAGE DATA [C15DECF]

NOVEMBER 12, 2024

For Help Desk Phone Numbers Click here

Feature Code:	C15DECF	**Rating Type:**	STANDBY	**Sales model Package:**	PGS500
Engine Sales Model:	C15	**Engine Arrangement Number:**	4206876	**Hertz:**	60
EKW W/F:	500.0	**Noise Reduction:**	0 dBA	**Back Pressure:**	0.0 inH2O

Engine Package Information

Engine Package Data

Package Cooling Information

Open Cooling Data

% Load	Airflow Rate scfm			Ambient Capability Sea Level (Deg F)			Ambient Capability 300 m (Deg F)			Ambient Capability 600 m (Deg F)			Ambient Capability 900 m (Deg F)		
	0 inH2O	1/2 inH2O	3/4 inH2O	0 inH2O	1/2 inH2O	3/4 inH2O	0 inH2O	1/2 inH2O	3/4 inH2O	0 inH2O	1/2 inH2O	3/4 inH2O	0 inH2O	1/2 inH2O	3/4 inH2O
100.0	29770	27827	26909	140	140	136	131	131	131	113	113	113	95	95	95
75.0	29770	27827	26909	140	140	140	140	140	140	140	140	140	140	140	140

SA Level 1 Canopy Cooling Data

% Load	Airflow Rate scfm	Ambient Capability Sea Level (Deg F)	Ambient Capability 300 m (Deg F)	Ambient Capability 600 m (Deg F)	Ambient Capability 900 m (Deg F)
100.0	26415	118	116	104	95
75.0	26415	138	136	136	134

SA Level 2 Canopy Cooling Data

% Load	Airflow Rate scfm	Ambient Capability Sea Level (Deg F)	Ambient Capability 300 m (Deg F)	Ambient Capability 600 m (Deg F)	Ambient Capability 900 m (Deg F)
100.0	26415	131	129	127	125

Package Sound Information

Sound Comments :

Caterpillar Confidential: **Green**
Content Owner: Commercial Processes Division
Web Master(s): PSG Web Based Systems Support
Current Date: 11/12/2024, 3:34:48 PM
© Caterpillar Inc. 2024 All Rights Reserved.
Data Privacy Statement.
Cookie Settings

South Coast
Air Quality Management District
21865 Copley Drive, Diamond Bar, CA 91765-4178
(909) 396-2000 • www.aqmd.gov

December 14, 2023

Mr. Bob Shepherd
Caterpillar, Inc./Quinn Power Systems
PO Box 226789
Los Angeles, CA 90022-0489

Dear Mr. Shepherd:

The South Coast Air Quality Management District (South Coast AQMD) has extended Certified Equipment Permits (CEPs) to December 31, 2024 for the stationary emergency internal combustion (IC) engine models listed in the attached table. However, please be reminded that many of these certified diesel-fueled IC engines may not meet Rule 1470 requirements if installed at or near a sensitive receptor or near school grounds and, therefore, may require an aftertreatment system such as a diesel particulate filter in the exhaust stream.

Please note that the South Coast AQMD does not endorse or warrant any specific equipment or manufacturer. Modification of the equipment listed here will void this certification.

If you have additional questions or need further clarification on the CEP program, please feel free to contact CJ Chang at (909) 396-3293, cchang@aqmd.gov; or Susan Tsai at (909) 396-2529, stsai@aqmd.gov.

Sincerely,

David Ono

David Ono
Senior Air Quality Engineering Manager
Engineering and Permitting

DO:ST:CC

Cleaning the air that we breathe...

SOUTH COAST AIR QUALITY MANAGEMENT DISTRICT
Certified ICE-Emergency Generators

CATERPILLAR, INC./QUINN POWER SYSTEMS

Engine Mfg.	Model	Engine Rating	Application No.
Caterpillar	C4.4 (60 kWe)	99.9 BHP	544534
Caterpillar	C4.4 (80/100 kWe)	156.8 BHP	482670
Caterpillar	C-6.6 (125/150/175 kWe)	274 BHP	472638
Perkins	1106D-E66TAG4	274 BHP	457877
Caterpillar	C7.1 (125 kWe)	229 BHP	585257
Caterpillar	C7.1 (150 kWe)	247 BHP	585258
Caterpillar	C7.1 (175 kWe)	280 BHP	585259
Caterpillar	C7.1 (200 kWe)	315 BHP	567863
Caterpillar	C9 (200/230 kWe)	374 BHP	514974
Caterpillar	C-9 (250 kWe)	398 BHP	455162
Caterpillar	C-9 (300 kWe)	480 BHP	455163
Caterpillar	C15 (350 kWe)	546 BHP	554734
Caterpillar	C-15 (400 kWe)	619 BHP	452052
Caterpillar	C15 (450 kWe)	689 BHP	600362
Caterpillar	C15 (500 kWe)	762 BHP	554729
Caterpillar	C15 (550 kWe)	839 BHP	554730
Caterpillar	C-18 (550 kWe)	839 BHP	453934
Caterpillar	C-18 (600 kWe)	900 BHP	453933
Caterpillar	C-18 (750 kWe)	1112 BHP	611877

UNITED STATES ENVIRONMENTAL PROTECTION AGENCY
2024 MODEL YEAR
CERTIFICATE OF CONFORMITY
WITH THE CLEAN AIR ACT

OFFICE OF TRANSPORTATION AND AIR QUALITY
ANN ARBOR, MICHIGAN 48105

Certificate Issued To: **Caterpillar Inc.**
(U.S. Manufacturer or Importer)

Certificate Number: RCPXL15.2NZS-025

Effective Date: 07/26/2023

Expiration Date: 12/31/2024

Byron J. Bunker, Division Director
Compliance Division

Issue Date: 07/26/2023

Revision Date: N/A

Model Year: 2024
Manufacturer Type: Original Engine Manufacturer
Engine Family: RCPXL15.2NZS

Mobile/Stationary Indicator: Stationary
Emissions Power Category: 560<kW<=2237
Fuel Type: Diesel
After Treatment Devices: No After Treatment Devices Installed
Non-after Treatment Devices: Electronic Control, Engine Design Modification

Pursuant to Section 111 and Section 213 of the Clean Air Act (42 U.S.C. sections 7411 and 7547) and 40 CFR Part 60, and subject to the terms and conditions prescribed in those provisions, this certificate of conformity is hereby issued with respect to the test engines which have been found to conform to applicable requirements and which represent the following engines, by engine family, more fully described in the documentation required by 40 CFR Part 60 and produced in the stated model year.

This certificate of conformity covers only those new compression-ignition engines which conform in all material respects to the design specifications that applied to those engines described in the documentation required by 40 CFR Part 60 and which are produced during the model year stated on this certificate of the said manufacturer, as defined in 40 CFR Part 60.

It is a term of this certificate that the manufacturer shall consent to all inspections described in 40 CFR 1068 and authorized in a warrant or court order. Failure to comply with the requirements of such a warrant or court order may lead to revocation or suspension of this certificate for reasons specified in 40 CFR Part 60. It is also a term of this certificate that this certificate may be revoked or suspended or rendered void *ab initio* for other reasons specified in 40 CFR Part 60.

This certificate does not cover engines sold, offered for sale, or introduced, or delivered for introduction, into commerce in the U.S. prior to the effective date of the certificate.

Caterpillar Emergency Engines
SCAQMD CEP List
January 11, 2024

			EPA Engine Certification (2024) (g/bhp-hr)						TMI Reference Data (g/bhp-hr)	SCAQMD BACT Guidelines (2016) (g/bhp-hr)				
Model	Generator kW	HP	Family Name	HC	NOx	NMHC + NOx	CO	PM	TMI Reference	HC	NOx	NMHC + NOx	CO	PM
C15	500	762	RCPXL15.2NZS	0.07	4.01	4.10	1.19	0.07	DM8155-03			4.8	2.6	0.15

ULCERT
UL 2200 LISTING

INCLUDES THE FOLLOWING:

ALTERNATOR
Alternator insulation system is UL Recognized (UL 1446). PMG and AREP alternators are available. Automatic voltage regulators are UL Recognized.

WIRE HARNESS
AC, DC, and power harnesses are made with UL Listed wire and UL Listed terminals.

CONTROL PANEL
Control panels are comprised of UL Listed and UL Recognized components. EMCP is UL Recognized.

CIRCUIT BREAKER
Output circuit breaker is 100% rated and UL Listed.

TESTING
All UL Listed sets are designed and rigorously tested in accordance with UL Standard for Safety, UL 2200.

LABELING
Labeling meets UL requirements.

MECHANICAL OPTIONS
Mechanical options do not require UL Listing and, therefore, are not affected. The exceptions to this are:

FUEL TANKS
If a fuel tank is ordered with the unit, it must be UL Listed. Two versions are available: 24 hour integral (FCUL2) and 24/48 hour sub-base (FSBT)

ENCLOSURES
Factory installed enclosures meet UL requirements. Weatherproof and sound attenuated versions are available.

ELECTRICAL OPTIONS
The table below shows electrical options that meet UL requirements:

EOS	Lube Oil Sump Heater
WCA1	Low Coolant Level Shutdown
WSS1	Low Coolant Temperature Alarm
AH1H	Anti-Condensation Heater
WHH	Coolant Heater
GOVES	Electronic Governor (Fully Adjustable)
FSS1	Critical Low Fuel Level Shutdown
FSS2	Low Fuel Level Alarm
FSSS	Critical High Fuel Alarm
PBCSUL	UL Listed Battery Charger
PBC10NU	NFPA Battery Charger, UL Listed

UL Listing is available on all diesel fuelled generator sets up to 17S kW at 60 Hz, 600 vac maximum.

LEHE0410-01 (11-18)

BUILT FOR IT.

www.Cat.com/electricpower
©2018 Caterpillar All rights reserved. Materials and specifications are subject to change without notice. The International System of Units (SI) is used in this publication. CAT, CATERPILLAR, their respective logos, ADEM, S•O•S, "BUILT FOR IT", "Caterpillar Yellow", the "Power Edge" trade dress as well as corporate and product identity used herein, are trademarks of Caterpillar and may not be used without permission.

Caterpillar: Confidential Green

CERTIFICATE OF COMPLIANCE

SEISMIC DESIGN OF NONSTRUCTURAL COMPONENTS AND SYSTEMS

Certification No.

VMA-50365-01C (Revision 13)

Expiration Date: 9/30/2023

Certification Parameters:

The nonstructural products (mechanical and/or electrical components) listed on this certificate are CERTIFIED[1] FOR SEISMIC APPLICATIONS in accordance with the following building code[2] releases.

IBC 2018, 2015, 2012, 2009, 2006

The following model designations, options, and accessories are included in this certification. Reference report number VMA-50365-01 as issued by The VMC Group for a complete list of certified models, included accessories/options, and certified installation methods.

Caterpillar; Diesel Gensets

Series C4.4LC, C4.4, C6.6, C7.1, C9, C13, C15, C18

The above referenced equipment is **APPROVED** for seismic application when properly installed[3], used as intended, and contains a Seismic Certification Label referencing this Certificate of Compliance[4]. As limited by the tabulated values, below grade, grade, and roof-level installations, installations in essential facilities, for life safety applications, and/or of equipment containing hazardous contents are permitted and included in this certification with an Equipment Importance Factor assigned as I_p=1.5. The equipment is qualified by comparative analysis and successful seismic shake table testing at the nationally recognized University of California Berkeley Pacific Earthquake Engineering Research Center and CERL (US Army Corp. of Engineers) Laboratory under the review of the ISO Accredited Product Certification Agency, the VMC Group.

Certified Seismic Design Levels			
Certified IBC	**Importance $I_p \leq 1.5$** Soil Classes A-E Risk Categories I-IV Design Categories A-F	z/h ≤ 1.0	z/h = 0.0
		$S_{DS} \leq 0.753$ g	$S_{DS} \leq 2.260$ g

Certified Seismic Installation Methods[8]	
Rigid Mounting From Unit Base To Rigid Structure	Rigid Mounting From Unit Base To Fuel Tank
External Isolation Mounting From Unit Base To Rigid Structure	

HEADQUARTERS
113 Main Street
Bloomingdale, NJ 07403
Phone: 973.838.1780
Toll Free: 800.569.8423
Fax: 973.492.8430

CALIFORNIA
180 Promenade Circle
Suite 300
Sacramento, CA 95834
Phone: 916.634.7771

TEXAS
11930 Brittmoore Park Drive
Houston, TX 77041
Phone: 713.466.0003
Fax: 713.466.1355

thevmcgroup.com

VMC GROUP
THE POWER OF TOGETHER

CATERPILLAR®

CERTIFICATE OF COMPLIANCE

SEISMIC DESIGN OF NONSTRUCTURAL COMPONENTS AND SYSTEMS

Certified Product Table:

Series	Max Rating [kW]	EPA Rating	Length [in]	Width [in]	Height [in]	Max. Off Tank Weight [lbs]	Max. On Tank Weight [lbs]	S_{DS} at z/h=0.0	S_{DS} at z/h=1.0	Certified Installation Methods
C4.4LC	60	Tier 3	98	43	78	2,293	4,979	2.49	0.83	Rigid
C4.4	100		136	44	92	3,961	8,516			
C6.6	175		198		96	5,080	12,752			
C7.1	200					5,338	13,010			
C9	300		219	81	114	8,364	19,850	2.26	0.75	Rigid and Externally Spring Isolated
C13	400		286		124	11,036	30,864			
C15	450		251		127	11,393	28,504			
	500	Tier 2				11,923	29,034			
C18	600		286		124	12,179	32,031			
	500	Tier 4F	247	90	111	13,720	21,687			
	750	Tier 2	275	91	106	15,585	N/A			Rigid
						N/A	28,209		1.29	

Group	Type	SDS (z/h=0)	SDS (z/h=1)	A_{Flex-H}	A_{Rig-H}	A_{Flex-V}	A_{Rig-V}	F_p/W_p
Seismic	AC156	2.26	0.75	2.26	0.9	1.51	0.6	0.54

Notes:
1. Weights include genset, enclosure (where applicable), tank and fuel (where applicable)
2. For a detailed list of weights, certified installation methods, and certified seismic design levels please refer to the certification report referenced on the first page of this certificate.

This certification includes the open generator set and the enclosed generator set when installed with or without the sub-base tank. This certification also includes the sub-base tank as a stand-alone accessory. The generator set and included options shall be a catalogue design and factory supplied. The generator set and applicable options shall be installed and attached to the building structure per the manufacturer supplied seismic installation instructions. For a list of certified configurations and options please directly contact the manufacturer. This certification excludes all non-factory supplied accessories, including but not limited to mufflers, isolation/restraint devices, remote control panels, remote radiators, pumps and other electrical/mechanical components.

IBC CERTIFIED VMC GROUP

VMA-50365-01C (Revision 13)
Issue Date: Friday, May 6, 2016
Revision Date: Friday, November 20, 2020
Expiration Date: Saturday, September 30, 2023

CERTIFICATE OF COMPLIANCE

SEISMIC DESIGN OF NONSTRUCTURAL COMPONENTS AND SYSTEMS

Notes & Comments:

1. All equipment listed herein successfully passed the seismic acceptance criteria for shake testing non-structural components and systems as set forth in the ICC AC-156. The Test Response Spectrum (TRS) enveloped the Required Response Spectrum (RRS) for all units tested. The tested units were representative sample(s) of a contingent of models and all remained captive and structurally sound after the seismic shake simulation. The units also remained functionally operational after the simulation testing as functional testing was completed by the equipment manufacturer before and after the seismic simulations. Although a seismic qualified unit inherently contains some wind resisting capacity, that capacity is undetermined and is excluded from this certification. Snow/Ice loads have been neglected and thus limit the unit to be installed both indoors (covered by an independent protective structure) and out of doors (exposed to accumulating snow/ice) for ground snow loads no greater than 30 psf for all applications.

2. The following building codes are addressed under this certification:
   IBC 2018 referencing ASCE7-16 and ICC-ES AC-156
   IBC 2015 referencing ASCE7-10 and ICC-ES AC-156
   IBC 2012 referencing ASCE7-10 and ICC-ES AC-156
   IBC 2009 referencing ASCE7-05 and ICC-ES AC-156
   IBC 2006 referencing ASCE7-05 and ICC-ES AC-156

3. Refer to the manufacturer supplied installation drawings for anchor requirements and mounting considerations for seismic applications. Required anchor locations, size, style, and load capacities (tension and shear) may be specified on the installation drawings or specified by a 3rd party. Mounting requirement details such as anchor brand, type, embedment depth, edge spacing, anchor-to-anchor spacing, concrete strength, special inspection, wall design, and attachment to non-building structures must be outlined and approved by the Engineer of Record for the project or building. Structural walls, structural floors, and housekeeping pads must also be seismically designed and approved by the project or building Structural Engineer of Record to withstand the seismic anchor loads as defined on the installation drawings. The installing contractor is responsible for ensuring the proper installation of all anchors and mounting hardware.

4. For this certificate and certification to remain valid, this certificate must correspond to the "Seismic Certification Label" found affixed to the unit by the factory. The label ensures the manufacturer built the unit in conformance to the IBC seismic design criteria set forth by the Certified Seismic Qualification Agency, the VMC Group, and meets the seismic design levels claimed by this certificate.

5. Mechanical, Electrical, and Plumbing connections to the equipment must be flexibly attached as to not transfer load through the connection. The structural integrity of any conduit, cable trays, piping, ductwork and/or flexible connections is the responsibility of others. This certification does not guarantee the equipment will remain compliant to NEMA, IP, UL, or CSA standards after a seismic event.

6. This certificate applies to units manufactured at:
   1720 West Kingsbury Street, Seguin, TX 78155
   Rodovia Luiz de Queiorz-KM 157 CEP 13420-900, Piracicaba/SP-Brazil

7. This certification follows the VMC Group's ISO-17065 Scheme.

8. The certified seismic installation methods states are a summary for all series this certificate covers, for more detailed information on the certified seismic installation methods, see the certified product tables.

John P. Giuliano, PE
President, VMC Group

VMA-50365-01C (Revision 13)
Issue Date: Friday, May 6, 2016
Revision Date: Friday, November 20, 2020
Expiration Date: Saturday, September 30, 2023

CATERPILLAR®

Quinn Power Systems

Project # / Name:		**Genset ID#**	
Startup Level:		**Genset Serial#**	
Customer:			
Contact Name		**Contact Number**	

Pre-Startup Checklist

This document is provided to assist in the startup of your Caterpillar Equipment. Each checklist item below is to be completed prior to commencement of startup activities. This information will also help to insure against the probability of incurring additional expense.

It is mandatory this document be completed and returned to QPS via the original e-mail sender; indicating the current equipment status, expected completion dates of incomplete items and the requested startup date. Please send photos of noted items as verification of completion. (**Note:** all incomplete items are required to be completed before startup personnel arrive on site).

A minimum of **three/four week notice** is recommended to schedule resources for startup. This does not guarantee availability of startup personnel. Your project manager will coordinate all startup activities with you.

Requested Start-up Date:		**Form Completed by:**	
Start-up Address:	**City:**	**State:**	**Zip Code:**
Site Contact:	**Contact Cell Number:**	**Contact Company:**	
Alternate Site Contact:	**Alternate Contact Cell Number:**	**Contact Company:**	
Security Clearance Required: If yes details need to be provided below in the comments section.	**Noise restrictions: If yes details need to be provided below in the comments section.(provide start/end time)**	**Site Safety Orientation Required:**	**PPE Requirements: If yes please list PPE requirements below in the comments section.**
☐ **Yes** ☐**No**	☐**Yes** ☐ **No**	☐ **Yes** ☐**No**	☐ **Yes** ☐**No**
Comments			

If Quinn Technician arrives on site and the conditions are not found to be in the stated conditions of completion, Quinn Power Systems reserves the right to charge for additional compensation outside the agreed upon contract documents. If the Customer requests, requires, or authorizes Quinn Power Systems to perform any services in addition to the agreed upon Scope of Work the Customer shall pay Quinn Power Systems for such Additional Services at current Quinn Power Systems field service rates. The Customer shall also reimburse Quinn Power Systems for all mileage and travel expenses, subcontractors, dealer technicians, material and equipment incurred in the performance of additional work.

Caterpillar: Confidential Green

CATERPILLAR®

Quinn Power Systems

EQUIPMENT	STATUS	EXPECTED COMPLETION DATE
Items to be completed before requesting startup scheduling:		
1. Air quality permits obtained / Permit to operate (AQMD, Ventura, SJVAPCD, etc.). **Please submit a PDF copy**		
2. Generator and additional supplied (shipped loose) equipment is set in place (anchored) or mounted. [* Avoid top entry on outdoor rated equipment] **Send Photo**		
3. Coordination Study, if necessary has been completed and addressed prior to startup.	☐Yes ☐No ☐N/A	
4. All Utility and Generator connections terminated and available? **Send Photo**	☐Yes ☐No ☐N/A	
5. All source and feeder cables are installed, terminated and tested per all drawings and codes. **Send Photo**	☐ Yes ☐No ☐N/A	
Items to be completed before startup activities commence (if not applicable list as N/A):		
6. Exhaust systems complete and fully installed (rain cap, rain shield, gaskets, DPF/Silencer, radiator flow, blankets etc.) [*Ensure all exhaust connections include a gasket] **Send Photo**	☐ Yes ☐No ☐ N/A	
7. Louvers, radiator ducting and/or exhaust fans connected, powered and or unobstructed. **Send Photo**	☐ Yes ☐No ☐N/A	
8. Engine batteries and racks installed on each generator. **Send Photo**	☐ Yes ☐No ☐N/A	
9. Confirm AC shore power available at Generator (Battery charger/Space Heater/etc.). **Send Photo**	☐ Yes ☐No ☐N/A	
10. Confirm acceptable fluid levels. (Coolant, Oil, Urea, Etc.) [* Advise of any deficiencies prior to tech arrival]	☐Yes ☐No ☐N/A	
11. Complete installation/support of shipped loose fuel vent extensions. **Send Photo**	☐Yes ☐No ☐N/A	
12. Fuel tank, Day tank and or Gas piping installation complete.	☐ Yes ☐No ☐N/A	
13. Fuel delivery complete including coordination with inspector/fire marshal, please ensure this is complete or scheduled no later than the morning of the 1st Quinn tech visit. [*For Diesel Gensets, it is recommended to have at least 90% of capacity to test alarms/floats (Diesel #2 Ultra low Sulfur fuel)]	☐Yes ☐No ☐N/A	
14. Field wiring complete from generator to (ATS, MTS, Quick connect, Loadbank, DPF, Remote E-stop buttons, etc.) **Send Photo**	☐ Yes ☐No ☐N/A	
15. Communication cabling installed for remote access, BMS, Remote annunciators, etc. **Send Photo**	☐Yes ☐No ☐N/A	
16. Building load available for NFPA 110 testing (2 hr. building load). [* If no building load, confirm approval of 4hr Load Bank test and note a building transfer test, at a later date, will incur additional cost]	☐Yes ☐No ☐N/A	
17. End User has been notified of Start-up and understands that interruptions to the downstream service may occur during building transfer.	☐Yes ☐No ☐N/A	

Name: _____ Date: _____

Title: _____

Caterpillar: Confidential Green

NFPA 110, 7.13 EPSS Installation Test Procedure

NFPA 110, 7.13 Procedure for EPSS Installation Acceptance

3500 Shepherd St., City of Industry, CA 90601 562-463-6000

Customer	
Site	
	Job Number
Engine M/N	Generator M/N
Engine S/N	Generator S/N
Hours	Gen. Prime No.
Date	Technician

From: **NFPA 110 Standard for Emergency and Standby Power Systems, 2019 Edition**.

Step 1

7.13.1 Upon completion of the installation of the EPSS, the EPS shall be tested to ensure conformity to the requirements of the standard with respect to both power output and function.

7.13.2.2 The test shall be conducted after completion of the installation with all EPSS accessory and support equipment in place and operating.

7.13.4 The EPSS shall perform within the limits specified in this standard.

7.13.4.1 The on-site installation acceptance test shall be conducted in accordance with 7.13.4.1.1 through 7.13.4.1.4.

Procedure		
7.13.4.1.1* In a *new and unoccupied building or facility*, with the prime mover in a cold start condition and the emergency load at operating level, a normal power failure shall be initiated by opening all switches or circuit breakers supplying the normal power to the building or facility. **7.13.4.1.2*** In an *existing occupied building or facility*, with the prime mover in a cold start condition and the emergency load at operating level, a normal power failure shall be simulated by operating at least one transfer switch test function or initiated by opening all switches or breakers supplying normal power to all ATSs that are part of the EPSS being commissioned by this initial acceptance test.		
7.13.4.1.3 When the EPSS consists of paralleled EPS's, the system control function for paralleling and load shedding shall be verified in accordance with system design documentation.		
7.13.4.1.4 The tests conducted in accordance with 7.13.4.1.1 and 7.13.4.1.2 shall be performed in accordance with (1) through (12).		
(1) When the EPSS consists of paralleled EPSs, the quantity of EPSs intended to be operated simultaneously shall be tested simultaneously with building load for the test period identified in 7.13.4.1.4(10).		
(2) The test load shall be all loads that are served by the EPSS. There is no minimum loading requirement for this portion of the test.		
(3) The time delay on start shall be observed and recorded.		Sec
(4) The cranking time until the prime mover starts and runs shall be observed and recorded.		Sec
(5) The time taken to reach operating speed shall be observed and recorded.		Sec
(6)*The engine start function shall be confirmed by verifying operation of the initiating circuit of all transfer switches supplying EPSS loads.		
(7) The time taken to achieve a steady-state condition with all switches transferred to the emergency position shall be observed and recorded.		Sec
(8) The voltage, frequency, and amperes shall be recorded.		
(9) Where applicable, the prime mover oil pressure and water temperature shall be recorded.		
(10) The load test with building load, or other loads that simulate the intended load as specified in Section 5.4, shall be continued for **not less than 2 hours**, and the run time shall be recorded.		

Intervals Start @	Time	Volts			Amps			Kw	Hz	Water Temp	Oil Press	Batt. Charge Rate	Amb Temp
		1	2	3	1	2	3						
Start													
+5 min													
+10 min													
+15 min													
+30 min													
+45 min													
+60 min													
+75 min													
+90 min													
+105 min													
+120 min													

(11) When normal power is restored to the building or facility, the time delay on retransfer to normal power for each switch with a minimum setting of 5 minutes shall be recorded.

Sw-1	Sw-2	Sw-3	Sw-4	Sw-5	Sw-6	Sw-7	Sw-8	

(12) The time delay on the prime mover cooldown period and shutdown shall be recorded.

7.13.4.2 After completion of the test performed in 7.13.4.1, the prime mover shall be allowed to cool for not less than 5 minutes.

Step 2

7.13.4.3* A load shall be applied for a 2-hour, full-load test. The building load shall be permitted to serve as part or all of the load, supplemented by a load bank of sufficient size to provide a load equal to 100 percent of the nameplate kW rating of the EPS, less applicable derating factors for site conditions. With full load applied, the coolant temperature of the generator set shall stabilize at a constant value relative to outdoor ambient temperature at least 30 minutes prior to completion of the test.

7.13.4.3.1 This full-load test shall be initiated after the test specified in 7.13.4.1.4 by any method that starts the prime mover and, upon reaching rated rpm, picks up not less than 30 percent of the nameplate Kw rating for the first 30 minutes, not less than 50 percent of the nameplate Kw rating for the next 30 minutes, and 100 percent of the nameplate Kw rating for the next 60 minutes, less applicable derating factors for site conditions.

7.13.4.3.2 A unity power factor shall be permitted for on-site testing, provided that rated load tests at the rated power factor have been performed by the manufacturer of the EPS prior to shipment.

7.13.4.3.3 Where the EPS is a paralleled multi-unit EPS, each unit shall be permitted to be tested individually at its rating.

7.13.4.3.4 The data specified in 7.13.4.1.4(4), (5), and (7) shall be recorded at first load acceptance of the test period identified in 7.13.4.1.4(10).

(4) The cranking time until the prime mover starts and runs shall be observed and recorded.		Sec
(5) The time taken to reach operating speed shall be observed and recorded.		Sec
(7) The time taken to achieve a steady-state condition with all switches transferred to the emergency position shall be observed and recorded.		Sec

7.13.4.3.5 The data specified in 7.13.4.1.4(8) and 7.13.4.1.4(9) shall be recorded at first load acceptance and every 15 minutes thereafter until the completion of the test period identified in 7.13.4.1.4(10).

(8) The voltage, frequency, and amperes shall be recorded.
(9) Where applicable, record prime mover oil pressure and water temperature.

Full Load Test

Intervals	Time	Volts			Amps			Kw	Hz	Water Temp	Oil Press	Batt. Char	Amb Temp
		1	2	3	1	2	3						
Start													
+5 min													
+10 min													
+15 min													
+30 min													
+45 min													
+60 min													
+75 min													
+90 min													
+105 min													
+120 min													

Step 3

7.13.4.4 Any method recommended by the manufacturer for the cycle crank test shall be utilized to prevent the prime mover from running.

7.13.4.4.1 The control switch shall be set at "run" to cause the prime mover to crank.

7.13.4.4.2 The complete crank/rest cycle specified in 5.6.4.2 and Table 5.6.4.2 shall be observed.

Cranking Method (cycle or continuous)	Cranking Cycle	Rest Period

7.13.4.4.3 The battery charge rate shall be recorded at 5-minute intervals for the first 15 minutes or until charge rate stabilization.

Step 4

7.13.4.5 All safeties specified in 5.6.5 and 5.6.6 shall be tested on site as recommended by the manufacturer.

Exception No 1: It shall be permitted for the manufacturer to test and document overcrank, high engine temperature, low lube oil pressure and overspeed safeties prior to shipment.

Exception No 2: Where the safety functions are proven to be fail-safe as demonstrated by monitoring of normal conditions on engine metering and demonstration that a failed sensor or circuit will not cause shutdown of the engine, further testing of the safeties is not required.

5.6.5.1 A control panel shall be provided and shall contain the following:	Verified
(1) Automatic remote start capability	
(2) "Run-off-automatic" switch	
(3) Shutdowns as required by 5.6.5.2(3)	
(a) Failing to start after specified cranking time	
(b) Overspeed	
(c) Low lubricating oil pressure	
(d) High engine temperature (An automatic engine shutdown device for high lubricating oil temperature shall not be required)	
(e) Operation of remote manual stop station	
(4) Individual alarm indication to annunciate any of the conditions listed in Table 5.6.5.2 and with the following characteristics:	
(a) Battery powered	
(b) Visually indicated.	
(c) Have additional contacts or circuits for a common audible alarm that signals locally and remotely when any of the itemized conditions occurs.	
(d) Have a lamp test switch(es) to test the operation of all alarm lamps.	
(5) Controls to shut down the prime mover upon removal of the initiating signal or manual emergency shutdown	

(6) The ac instruments listed in 5.6.9.9	
5.6.5.3 Engines equipped with a maintaining shutdown device (air shutdown damper) shall have a set of contacts that monitor the position of this device, with local alarm indication and remote annunciation in accordance with Table 5.6.5.2.	
5.6.5.4 The control panel in 5.6.5.2(4) shall be specifically approved for either a Level 1 or a Level 2 EPS consistent with the installation.	
5.6.5.5 The cranking cycle shall be capable of being initiated by any of the following:	
(1) Manual start initiation as specified in 5.6.5.2(2)(a).	
(2) Loss of normal power at any automatic transfer switch (ATS) as part of the EPSS. Prime mover shall start after appropriate time delays, upon operation of a remote switch or set of contacts.	
(3) Clock exerciser located in an ATS or in the control panel.	
(4) Manually operated (test) switch located in each ATS that simulates a loss of power and causes automatic starting and operation until this switch is reset, to cause the engine circuit to duplicate its functions in the same manner commercial power is restored after a true commercial power failure.	
(5) Where an ATS is not used, a signal indicating loss of acceptable power.	
5.6.5.6 All installations shall be provided with at least one remote emergency stop switch for each prime mover.	
5.6.5.6.1 The remote emergency stop switch shall be located outside the room housing the prime mover or exterior enclosure and shall be permitted to be mounted on the exterior of the enclosure.	
5.6.5.6.2 Provisions shall be made so access is limited to qualified persons.	
5.6.5.6.3 The remote emergency stop switch shall identify the prime mover it controls.	
5.6.6* Remote Controls and Alarms. A remote, common audible alarm shall be provided as specified in 5.6.5.2(4).	
5.6.6.1 Alarms and annunciation shall be powered by the prime mover starting battery unless operational constraints make this impracticable. In that circumstance an alternate source from the EPSS, such as storage battery, UPS, or branch circuit supplied by the EPSS, shall be permitted.	
5.6.6.2 The following annunciation shall be provided at a minimum: (1) For Level 1 EPS, local annunciation and facility remote annunciation, or local annunciation and network remote annunciation (2) For Level EPS, local annunciation	
5.6.6.3 For the purposes of defining the types of annunciation in 5.6.6.2, the following shall apply: (1) Local annunciation is located on the equipment itself or within the same equipment room. (2) Facility remote annunciation is located on site but not within the room where the equipment is located. (3) Network remote annunciation is located off site.	
5.6.6.4 An alarm-silencing means shall be provided, and the panel shall include repetitive alarm circuitry so that, after the audible alarm has been silenced, it reactivates after the fault condition has been cleared and has to be restored to its normal position to be silenced again.	
5.6.6.5 In lieu of the requirement in 5.6.6.4, a manual alarm silencing means shall be permitted that silences the audible alarm after the occurrence of the alarm condition, provided such means do not inhibit any subsequent alarms from sounding the audible alarm again without further manual action.	
Battery Tests: Equalize charging of battery cells according to manufacturer's written instructions. Record individual cell voltages. a. Measure charging voltage and voltages between available battery terminals for full-charging and float-charging conditions. Check electrolyte level and specific gravity under both conditions.	
b. Test for contact integrity of all connectors. Perform an integrity load test and a capacity load test for the battery.	
c. Verify acceptance of charge for each element of the battery after discharge.	
d. Verify that measurements are within manufacturer's specifications.	
Battery-Charger Tests: Verify specified rates of charge for both equalizing and float-charging conditions. System Integrity Tests: Methodically verify proper installation, connection, and integrity of each element of engine-generator system before and during system operation. Check for air, exhaust, and fluid leaks.	
Exhaust-System Back-Pressure Tests: Use a manometer with a scale exceeding 40-inch wg (120 kPa). Connect to exhaust line close to engine exhaust manifold. Verify that back pressure at full-rated load is within manufacturer's written allowable limits for the engine.	

System Integrity Tests: Methodically verify proper installation, connection, and integrity of each element of engine-generator system before and during system operation. Check for air, exhaust, and fluid leaks.	

END

Effective with sales to the first user on or after July 1, 2023

CATERPILLAR LIMITED WARRANTY

Industrial, Petroleum, Locomotive, and Agriculture Engine Products and Electric Power Generation Products

Worldwide

Caterpillar Inc. or any of its subsidiaries ("Caterpillar") warrants new and remanufactured engines and electric power generation products (new and new with Cat Reman Engines) sold by it (including any products of other manufacturers packaged and sold by Caterpillar), to be free from defects in material and workmanship.

This warranty does not apply to engines sold for use in on-highway vehicle or marine applications; engines in machines manufactured by or for Caterpillar; C175, 3500 and 3600 series engines used in locomotive applications; 3000 Family engines, C0.5 through C4.4 and ACERT™ (C6.6, C7, C7.1, C9, C9.3, C11, C13, C15, C18, C27, and C32) engines used in industrial, mobile agriculture and locomotive applications; or Cat® batteries; or Electric Power Generation products manufactured or assembled and sold in India except GC models, which are covered by this warranty. These products (except for GC models) are covered by other Caterpillar warranties.

This warranty is subject to the following:

Warranty Period

- For industrial engines, engines in a petroleum applications or Petroleum Power Systems (excluding petroleum fire pump application), or engines in a Locomotive application, or Uninterruptible Power Supply (UPS) systems, the warranty period is 12 months after date of delivery to the first user.
- For engines used in petroleum fire pump and mobile agriculture applications the warranty period is 24 months after date of delivery to the first user.
- For controls only (EPIC), configurable and custom switchgear products, and automatic transfer switch products, the warranty period is 24 months after date of delivery to the first user.
- For new CG132, CG170 and CG260 series power generation products the warranty period is 24 months after date of delivery to first user, but not to exceed 36 months from shipment from the Caterpillar place of manufacture.
- For electric power generation products other than CG132, CG170 and CG260 series in prime or continuous applications the warranty period is 12 months. For standby applications the warranty period is 24 months/1000 hours. For emergency standby applications the warranty period is 24 months/400 hours. All terms begin after date of delivery to the first user.
- For all other applications the warranty period is 12 months after date of delivery to the first user.

Caterpillar Responsibilities

If a defect in material or workmanship is found during the warranty period, Caterpillar will, during normal working hours and at a place of business of a Cat dealer or other source approved by Caterpillar:

- Provide (at Caterpillar's choice) new, Remanufactured, or Caterpillar approved repaired parts or assembled components needed to correct the defect.

Note: New, remanufactured, or Caterpillar approved repaired parts or assembled components provided under the terms of this warranty are warranted for the remainder of the warranty period applicable to the product in which installed as if such parts were original components of that product. Items replaced under this warranty become the property of Caterpillar.

- Replace lubricating oil, filters, coolant, and other service items made unusable by the defect.
- Provide reasonable and customary labor needed to correct the defect, including labor to disconnect the product from and reconnect the product to its attached equipment, mounting, and support systems, if required.

For new 3114, 3116, and 3126 engines and, new and Caterpillar rebuild electric power generation products (which includes the following: any new products of other manufacturers packaged and sold by Caterpillar)

- Provide travel labor, up to four hours round trip, if in the opinion of Caterpillar, the product cannot reasonably be transported to a place of business of a Cat dealer or other source approved by Caterpillar (travel labor in excess of four hours round trip, and any meals, mileage, lodging, etc. is the user's responsibility).

For all other products:

- Provide reasonable travel expenses for authorized mechanics, including meals, mileage, and lodging, when Caterpillar chooses to make the repair on-site.

User Responsibilities

The user is responsible for:

- Providing proof of the delivery date to the first user.
- Labor costs, except as stated under "Caterpillar Responsibilities," including costs beyond those required to disconnect the product from and reconnect the product to its attached equipment, mounting, and support systems.
- Travel or transporting costs, except as stated under "Caterpillar Responsibilities."
- Premium or overtime labor costs.
- Parts shipping charges in excess of those that are usual and customary.
- Local taxes, if applicable.
- Costs to investigate complaints, unless the problem is caused by a defect in Caterpillar material or workmanship.
- Giving timely notice of a warrantable failure and promptly making the product available for repair.
- Performance of the required maintenance (including use of proper fuel, oil, lubricants, and coolant) and items replaced due to normal wear and tear.
- Allowing Caterpillar access to all electronically stored data.

Limitations

Caterpillar is not responsible for:

- Failures resulting from any use or installation that Caterpillar judges improper.
- Failures resulting from attachments, accessory items, and parts not sold or approved by Caterpillar.
- Failures resulting from abuse, neglect, and/or improper repair.
- Failures resulting from user's delay in making the product available after being notified of a potential product problem.
- Failures resulting from unauthorized repairs or adjustments, and unauthorized fuel setting changes.
- Damage to parts, fixtures, housings, attachments, and accessory items that are not part of the engine, Cat Selective Catalytic Reduction System or electric power generation product (including any products of other manufacturers packaged and sold by Caterpillar).
- Repair of components sold by Caterpillar that is warranted directly to the user by their respective manufacturer. Depending on type of application, certain exclusions may apply. Consult your Cat dealer for more information.

(Continued on reverse side…)

This warranty covers every major component of the products. Claims under this warranty should be submitted to a place of business of a Cat dealer or other source approved by Caterpillar. For further information concerning either the location to submit claims or Caterpillar as the issuer of this warranty, write Caterpillar Inc., 100 N.E. Adams St., Peoria, IL USA 61629, telephone 1 (309) 675-1000, or go to URL, www.cat.com, Find Your Dealer.

Caterpillar's obligations under this Limited Warranty are subject to, and shall not apply in contravention of, the laws, rules, regulations, directives, ordinances, orders, or statutes of the United States, or of any other applicable jurisdiction, without recourse or liability with respect to Caterpillar.

A) For products operating outside of Australia, Fiji, Nauru, New Caledonia, New Zealand, Papua New Guinea, the Solomon Islands, and Tahiti, the following is applicable:

NEITHER THE FOREGOING EXPRESS WARRANTY NOR ANY OTHER WARRANTY BY CATERPILLAR, EXPRESS OR IMPLIED, IS APPLICABLE TO ANY ITEM CATERPILLAR SELLS THAT IS WARRANTED DIRECTLY TO THE USER BY ITS MANUFACTURER.

THIS WARRANTY IS EXPRESSLY IN LIEU OF ANY OTHER WARRANTIES, EXPRESS OR IMPLIED, INCLUDING ANY WARRANTY OF MERCHANTABILITY OR FITNESS FOR A PARTICULAR PURPOSE, EXCEPT CATERPILLAR EMISSION-RELATED COMPONENT WARRANTIES FOR NEW ENGINES, WHERE APPLICABLE. REMEDIES UNDER THIS WARRANTY ARE LIMITED TO THE PROVISION OF MATERIAL AND SERVICES, AS SPECIFIED HEREIN.

CATERPILLAR IS NOT RESPONSIBLE FOR INCIDENTAL OR CONSEQUENTIAL DAMAGES.

CATERPILLAR EXCLUDES ALL LIABILITY FOR OR ARISING FROM ANY NEGLIGENCE ON ITS PART OR ON THE PART OF ANY OF ITS EMPLOYEES, AGENTS, OR REPRESENTATIVES IN RESPECT OF THE MANUFACTURE OR SUPPLY OF GOODS OR THE PROVISION OF SERVICES RELATING TO THE GOODS.

IF OTHERWISE APPLICABLE, THE VIENNA CONVENTION ON CONTRACTS FOR THE INTERNATIONAL SALE OF GOODS IS EXCLUDED IN ITS ENTIRETY.

For personal or family use engines or electric power generation products, operating in the USA, its territories and possessions, some states do not allow limitations on how long an implied warranty may last nor allow the exclusion or limitation of incidental or consequential damages. Therefore, the previously expressed exclusion may not apply to you. This warranty gives you specific legal rights and you may also have other rights, which vary by jurisdiction. To find the location of the nearest Cat dealer or other authorized repair facility, call (800) 447-4986. If you have questions concerning this warranty or its applications, call or write:

In USA and Canada: Caterpillar Inc, 100 N.E. Adams St., Peoria, IL USA 61629, Attention: Customer Service Manager, Telephone 1 (309) 675-1000. Outside the USA and Canada: Contact your Cat dealer, go to URL, www.cat.com, Find Your Dealer.

B) For products operating in Australia, Fiji, Nauru, New Caledonia, New Zealand, Papua New Guinea, the Solomon Islands, and Tahiti, the following is applicable:

THIS WARRANTY IS IN ADDITION TO WARRANTIES AND CONDITIONS IMPLIED BY STATUTE AND OTHER STATUTORY RIGHTS AND OBLIGATIONS THAT BY ANY APPLICABLE LAW CANNOT BE EXCLUDED, RESTRICTED, OR MODIFIED ("MANDATORY RIGHTS"). ALL OTHER WARRANTIES OR CONDITIONS, EXPRESS OR IMPLIED (BY STATUTE OR OTHERWISE), ARE EXCLUDED. WITHOUT LIMITING THE FOREGOING PROVISIONS OF THIS PARAGRAPH, WHERE A PRODUCT IS SUPPLIED FOR BUSINESS PURPOSES, THE CONSUMER GUARANTEES UNDER THE CONSUMER GUARANTEES ACT 1993 (NZ) WILL NOT APPLY.

NEITHER THIS WARRANTY NOR ANY OTHER CONDITION OR WARRANTY BY CATERPILLAR, EXPRESS OR IMPLIED (SUBJECT ONLY TO THE MANDATORY RIGHTS), IS APPLICABLE TO ANY ITEM CATERPILLAR SELLS THAT IS WARRANTED DIRECTLY TO THE USER BY ITS MANUFACTURER.

IF THE MANDATORY RIGHTS MAKE CATERPILLAR LIABLE IN CONNECTION WITH SERVICES OR GOODS, THEN TO THE EXTENT PERMITTED UNDER THE MANDATORY RIGHTS, THAT LIABILITY SHALL BE LIMITED AT CATERPILLAR'S OPTION TO (a) IN THE CASE OF SERVICES, THE SUPPLY OF THE SERVICES AGAIN OR THE PAYMENT OF THE COST OF HAVING THE SERVICES SUPPLIED AGAIN AND (b) IN THE CASE OF GOODS, THE REPAIR OR REPLACEMENT OF THE GOODS, THE SUPPLY OF EQUIVALENT GOODS, THE PAYMENT OF THE COST OF SUCH REPAIR OR REPLACEMENT OR THE ACQUISITION OF EQUIVALENT GOODS.

CATERPILLAR EXCLUDES ALL LIABILITY FOR OR ARISING FROM ANY NEGLIGENCE ON ITS PART OR ON THE PART OF ANY OF ITS EMPLOYEES, AGENTS OR REPRESENTATIVES IN RESPECT OF THE MANUFACTURE OR SUPPLY OF GOODS OR THE PROVISION OF SERVICES RELATING TO THE GOODS.

CATERPILLAR IS NOT LIABLE FOR INCIDENTAL OR CONSEQUENTIAL DAMAGES UNLESS IMPOSED UNDER MANDATORY RIGHTS.

IF OTHERWISE APPLICABLE, THE VIENNA CONVENTION ON CONTRACTS FOR THE INTERNATIONAL SALE OF GOODS IS EXCLUDED IN ITS ENTIRETY.

C) For products supplied in Australia:

IF THE PRODUCTS TO WHICH THIS WARRANTY APPLIES ARE:

I. PRODUCTS OF A KIND ORDINARILY ACQUIRED FOR PERSONAL, DOMESTIC OR HOUSEHOLD USE OR CONSUMPTION; OR

II. PRODUCTS THAT COST AUD 100,000 OR LESS,

WHERE THOSE PRODUCTS WERE NOT ACQUIRED FOR THE PURPOSE OF RE-SUPPLY OR FOR THE PURPOSE OF USING THEM UP OR TRANSFORMING THEM IN THE COURSE OF PRODUCTION OR MANUFACTURE OR IN THE COURSE OF REPAIRING OTHER GOODS OR FIXTURES, THEN THIS SECTION C APPLIES.

THE FOLLOWING MANDATORY TEXT IS INCLUDED PURSUANT TO THE AUSTRALIAN CONSUMER LAW AND INCLUDES REFERENCES TO RIGHTS THE USER MAY HAVE AGAINST THE DIRECT SUPPLIER OF THE PRODUCTS: OUR GOODS COME WITH GUARANTEES THAT CANNOT BE EXCLUDED UNDER THE AUSTRALIAN CONSUMER LAW. YOU ARE ENTITLED TO A REPLACEMENT OR REFUND FOR A MAJOR FAILURE AND COMPENSATION FOR ANY OTHER REASONABLY FORESEEABLE LOSS OR DAMAGE. YOU ARE ALSO ENTITLED TO HAVE THE GOODS REPAIRED OR REPLACED IF THE GOODS FAIL TO BE OF ACCEPTABLE QUALITY AND THE FAILURE DOES NOT AMOUNT TO A MAJOR FAILURE. THE INCLUSION OF THIS TEXT DOES NOT CONSTITUTE ANY REPRESENTATION OR ACCEPTANCE BY CATERPILLAR OF LIABILITY TO THE USER OR ANY OTHER PERSON IN ADDITION TO THAT WHICH CATERPILLAR MAY HAVE UNDER THE AUSTRALIAN CONSUMER LAW.

TO THE EXTENT THE PRODUCTS FALL WITHIN THIS SECTION C BUT ARE NOT OF A KIND ORDINARILY ACQUIRED FOR PERSONAL, DOMESTIC OR HOUSEHOLD USE OR CONSUMPTION, CATERPILLAR LIMITS ITS LIABILITY TO THE EXTENT IT IS PERMITTED TO DO SO UNDER THE AUSTRALIAN CONSUMER LAW TO, AT ITS OPTION, THE REPAIR OR REPLACEMENT OF THE PRODUCTS, THE SUPPLY OF EQUIVALENT PRODUCTS, OR THE PAYMENT OF THE COST OF SUCH REPAIR OR REPLACEMENT OR THE ACQUISITION OF EQUIVALENT PRODUCTS.

THE WARRANTY SET OUT IN THIS DOCUMENT IS GIVEN BY CATERPILLAR INC. OR ANY OF ITS SUBSIDIARIES, 100 N. E. ADAMS ST, PEORIA, IL USA 61629, TELEPHONE 1 309 675 1000,THE USER IS RESPONSIBLE FOR ALL COSTS ASSOCIATED WITH MAKING A CLAIM UNDER THE WARRANTY SET OUT IN THIS DOCUMENT, EXCEPT AS EXPRESSLY STATED OTHERWISE IN THIS DOCUMENT, AND THE USER IS REFERRED TO THE BALANCE OF THE DOCUMENT TERMS CONCERNING CLAIM PROCEDURES, CATERPILLAR RESPONSIBILITIES AND USER RESPONSIBILITIES.

TO THE EXTENT PERMISSIBLE BY LAW, THE TERMS SET OUT IN THE REMAINDER OF THIS WARRANTY DOCUMENT (INCLUDING SECTION B) CONTINUE TO APPLY TO PRODUCTS TO WHICH THIS SECTION C APPLIES.

© 2023 Caterpillar. All Rights Reserved.
CAT, CATERPILLAR, LET'S DO THE WORK,
their respective logos, "Caterpillar Corporate Yellow", the "Power Edge" and Cat "Modern Hex"
trade dress as well as corporate and product identity used herein, are trademarks of Caterpillar and may not be used without permission.

QUINN POWER SYSTEMS

PARTS AND SERVICE STATEMENT

QUINN POWER SYSTEMS was organized on August 1, 2003 by the QUINN Company and is the only factory-authorized Caterpillar and Olympian Engine Distributor serving Los Angeles, Orange, and Inyo-Kern Counties in Southern California

QUINN POWER SYSTEMS is the successor to POWER SYSTEMS Associates, that was established in 1972 from the former Industrial Division of Shepherd Machinery Company. QUINN Company, serving Central California, was founded in 1919 and is the oldest Caterpillar dealer in California. We are Caterpillar's parts, service and sales representative.

QUINN POWER SYSTEMS offers genuine Caterpillar / Olympian parts and factory-trained mechanics. These are available on a 24-hour basis through our main office:

QUINN POWER SYSTEMS

PARTS AND SERVICE LOCATIONS

SELMA
Quinn Power Systems
10273 S. Golden State Blvd.
Selma, CA 93662-9410
P.O. Box 12625
Fresno, CA 93778-2625
(559) 891-6764

CORCORAN
Quinn Power Systems
510 Pickerell
Corcoran, CA 93212-1925
P.O. Box 578
Corcoran, CA 93212-0578
(559) 992-2193

CITY OF INDUSTRY
Quinn Power Systems
3500 Shepherd Street
City of Industry
562-463-6049

BAKERSFIELD
Quinn Power Systems
2200 Pegasus Dr.
Bakersfield, CA 93308-6801
Ph: (661)- 393-5800

OXNARD
Quinn Power Systems
801 Del Norte Blvd.
Oxnard, CA 93030-2692
P.O. Box 5227
Oxnard, CA 93031-5227
(805) 485-2171

RIVERSIDE
Quinn Power Systems
656 E La Cadena Drive
Riverside, CA 92507
(951) 683-5960

SALINAS
Quinn Power Systems
1300 Abbott Street
Salinas, CA 93901-4507
P.O. Box 1908
Salinas, CA 93902-1908
(831) 758-8461

SANTA MARIA
Quinn Power Systems
1655 N. Carlotti Drive
Santa Maria, CA 93454-1503
(805) 925-8611

PACKAGE WEIGHTS (ESTIMATES):

GENERATOR SET PACKAGE "DRY" WEIGHT	15,500 LBS.
333 GALLONS (USABLE) DIESEL FUEL	2,500 LBS.
TOTAL PACKAGE "WET" WEIGHT	18,000 LBS.

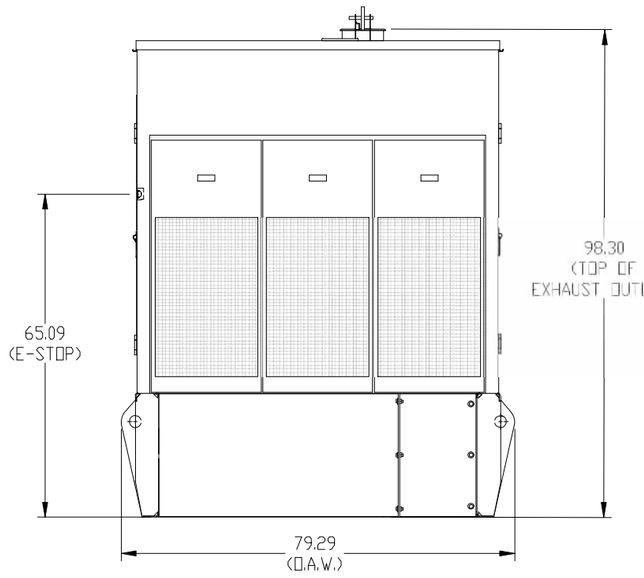

REAR VIEW

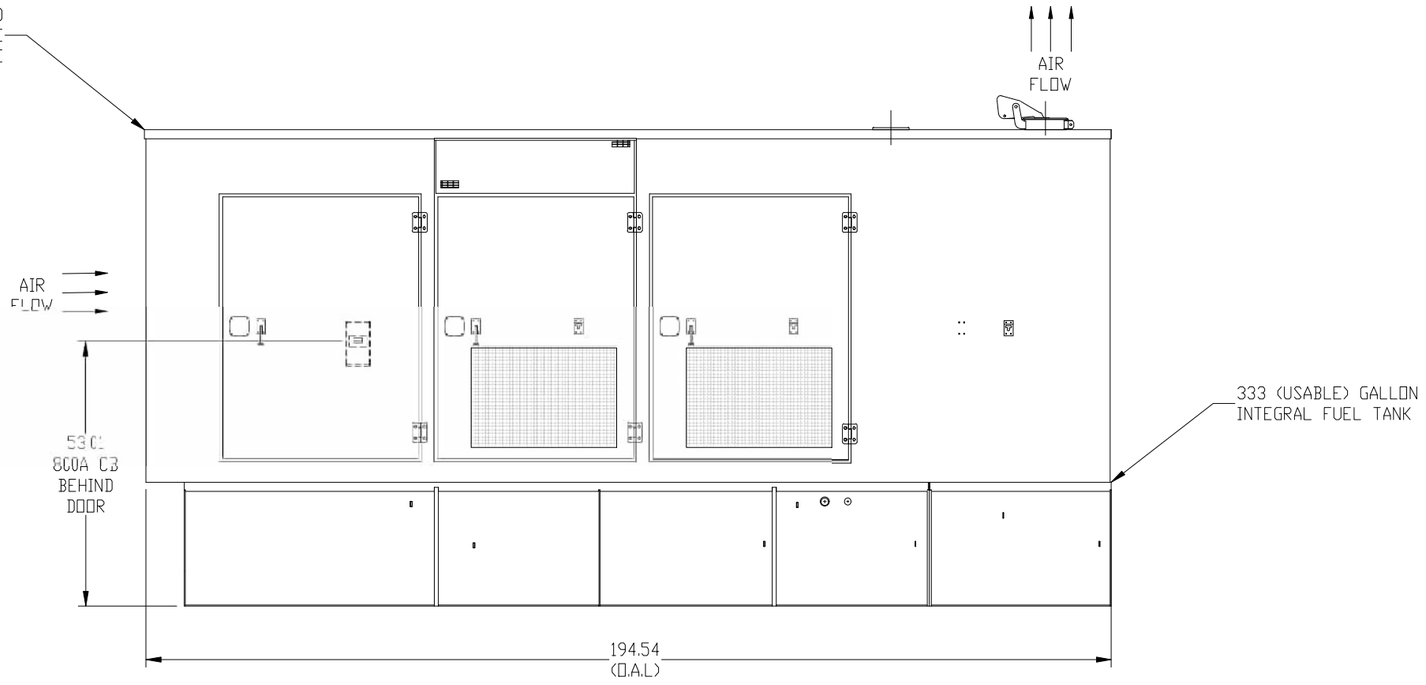

RIGHT SIDE VIEW

ITEM NO.	PART NO. OR SIZE	DRAWING NO.	NO. REQ'D	MATERIAL DESCRIPTION	REMARKS
3	LS-1429	449-9471	1	330 GALLON INTEGRAL TANK	CATERPILLAR
2	LS-4703	449-9471	1	LEVEL 1 SOUND ATTENUATED ENCLOSURE (WHITE)	CATERPILLAR
1	LS-1443	449-9471	1	C15 500KW, 277/480V 60HZ, 1800 RPM GENSET	CATERPILLAR

DRAWN D. URIARTE | DATE 11/14/2024

UNLESS NOTED OTHERWISE DIMENSIONS ARE IN INCHES

QUINN POWER SYSTEMS | CAT

656 E. LA CADENA DR
RIVERSIDE, CA 92507

TITLE
C15 500KW 277/480V 3-PHASE
GENERATOR SET

JOB: 240171
CITY OF REDLANDS - COUNTRY CLUB PS

STOCK NO. RE16827

SHEET 1 OF 3

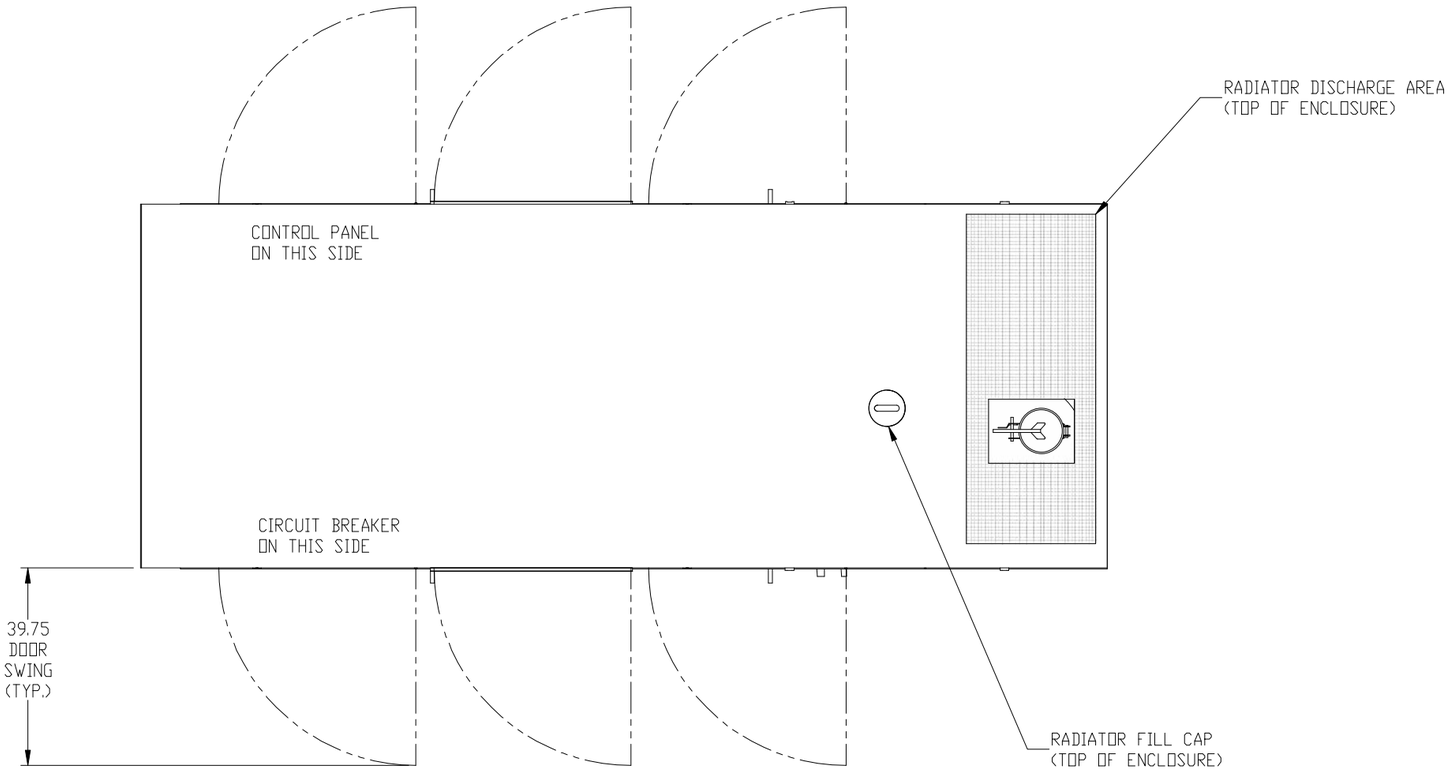

TOP VIEW

ITEM NO.	PART NO. OR SIZE	DRAWING NO.	NO. REQ'D	MATERIAL DESCRIPTION	REMARKS
3	LS-1429	449-9471	1	330 GALLON INTEGRAL TANK	CATERPILLAR
2	LS-4703	449-9471	1	LEVEL 1 SOUND ATTENUATED ENCLOSURE (WHITE)	CATERPILLAR
1	LS-1443	449-9471	1	C15 500KW, 277/480V 60HZ, 1800 RPM GENSET	CATERPILLAR

DRAWN D. URIARTE | DATE 11/14/2024

UNLESS NOTED OTHERWISE DIMENSIONS ARE IN INCHES

QUINN POWER SYSTEMS

656 E. LA CADENA DR
RIVERSIDE, CA 92507

TITLE
C15 500KW 277/480V 3-PHASE
GENERATOR SET

JOB: 240171
CITY OF REDLANDS - COUNTRY CLUB PS

STOCK NO. RE16827

SHEET 2 OF 3

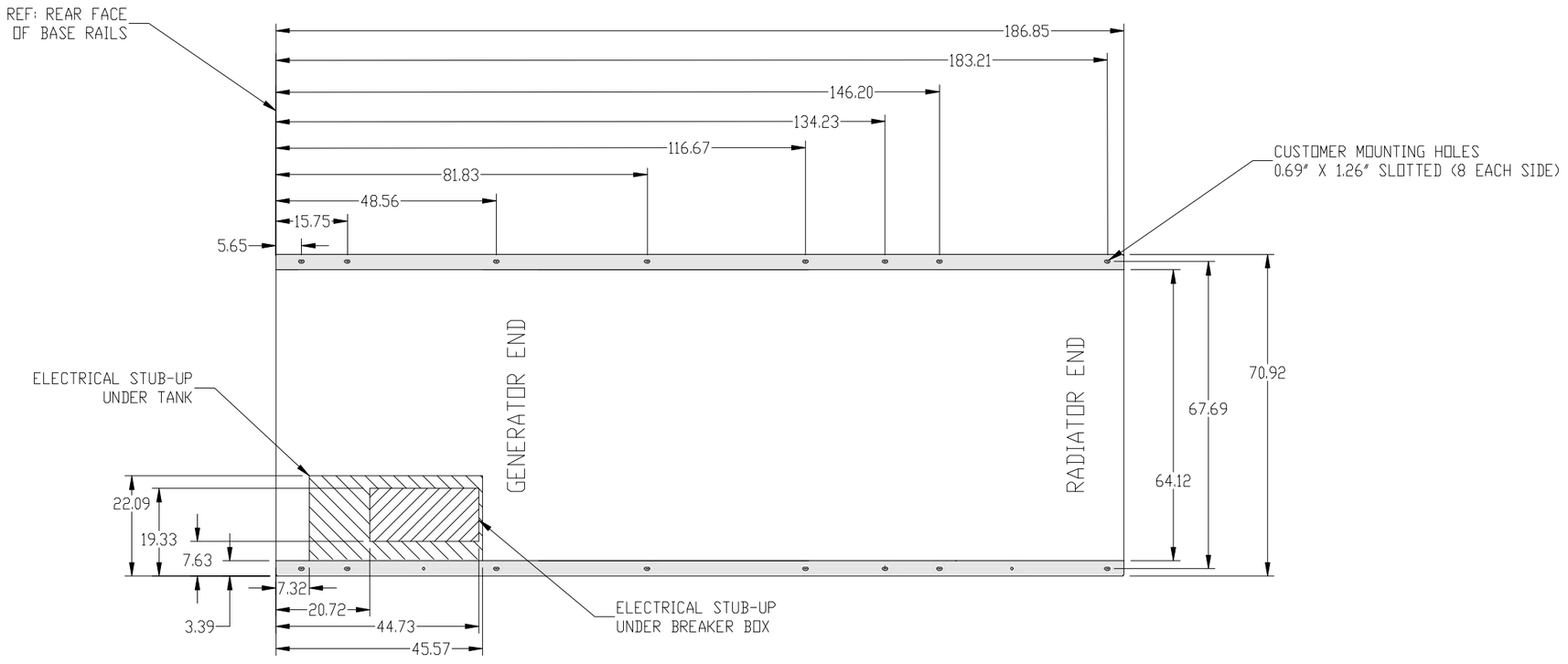

FOOTPRINT – STUB UP AND MOUNTING HOLES (TOP VIEW)

ITEM NO.	PART NO. OR SIZE	DRAWING NO.	NO. REQ'D	MATERIAL DESCRIPTION	REMARKS
3	LS-1429	449-9471	1	330 GALLON INTEGRAL TANK	CATERPILLAR
2	LS-4703	449-9471	1	LEVEL 1 SOUND ATTENUATED ENCLOSURE (WHITE)	CATERPILLAR
1	LS-1443	449-9471	1	C15 500KW, 277/480V 60HZ, 1800 RPM GENSET	CATERPILLAR

DRAWN D. URIARTE | DATE 11/14/2024

UNLESS NOTED OTHERWISE DIMENSIONS ARE IN INCHES

QUINN POWER SYSTEMS

656 E. LA CADENA DR
RIVERSIDE, CA 92507

TITLE
C15 500KW 277/480V 3-PHASE GENERATOR SET

JOB: 240171
CITY OF REDLANDS – COUNTRY CLUB PS
STOCK NO. RE16827
SHEET 3 OF 3

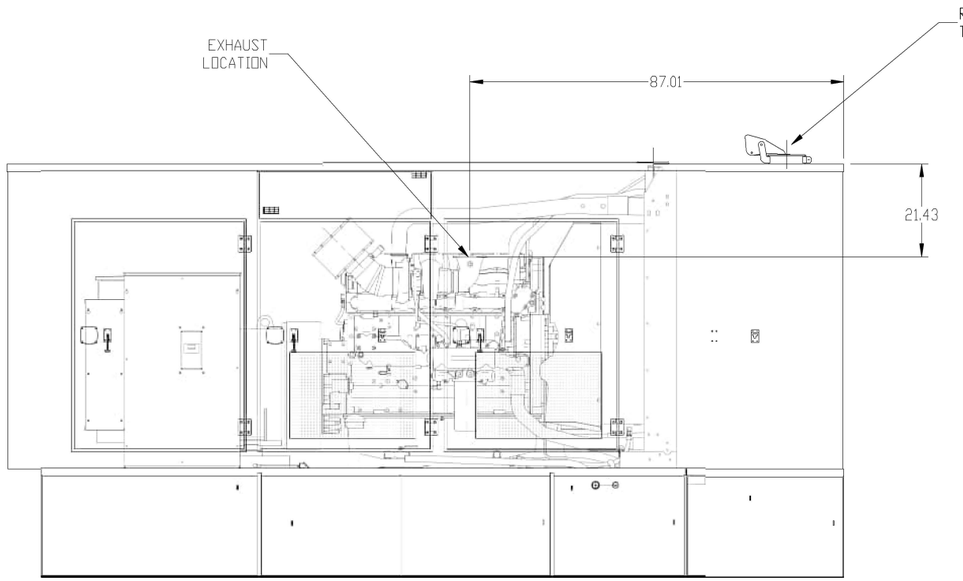

RIGHT SIDE VIEW – EXHAUST LOCATION

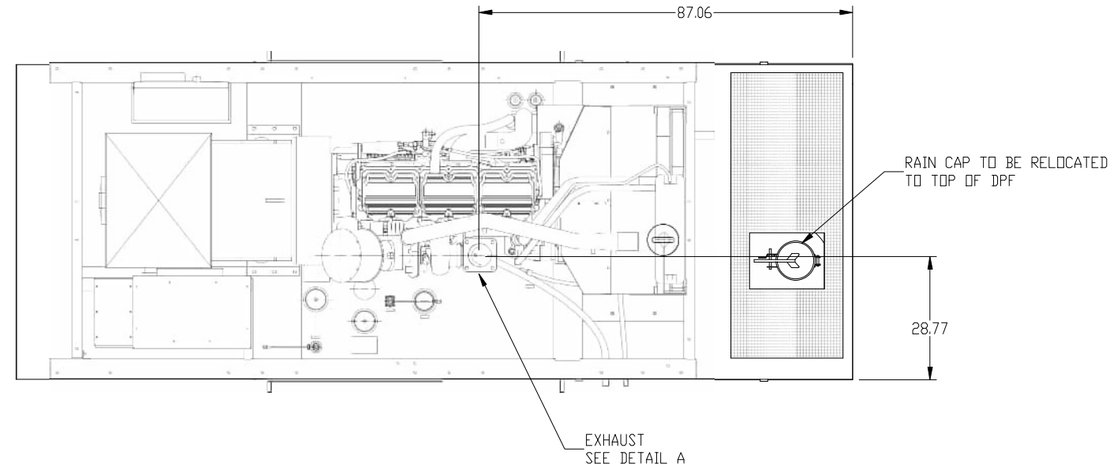

TOP VIEW – EXHAUST LOCATION

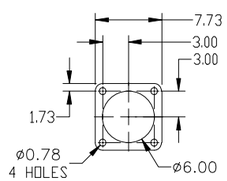

DETAIL A
SCALE 2:1

ITEM NO.	PART NO. OR SIZE	DRAWING NO.	NO. REQ'D	MATERIAL DESCRIPTION	REMARKS
3	LS-1429	449-9471	1	330 GALLON INTEGRAL TANK	CATERPILLAR
2	LS-4703	449-9471	1	LEVEL 1 SOUND ATTENUATED ENCLOSURE (WHITE)	CATERPILLAR
1	LS-1443	449-9471	1	C15 500KW, 277/480V 60HZ, 1800 RPM GENSET	CATERPILLAR

DRAWN D. URIARTE | DATE 08/08/2025

UNLESS NOTED OTHERWISE DIMENSIONS ARE IN INCHES

QUINN POWER SYSTEMS

656 E. LA CADENA DR
RIVERSIDE, CA 92507

TITLE
C15 500KW 277/480V 3-PHASE
GENERATOR SET

JOB: 240171
CITY OF REDLANDS – COUNTRY CLUB PS

STOCK NO. RE16827

SHEET 4 OF 4

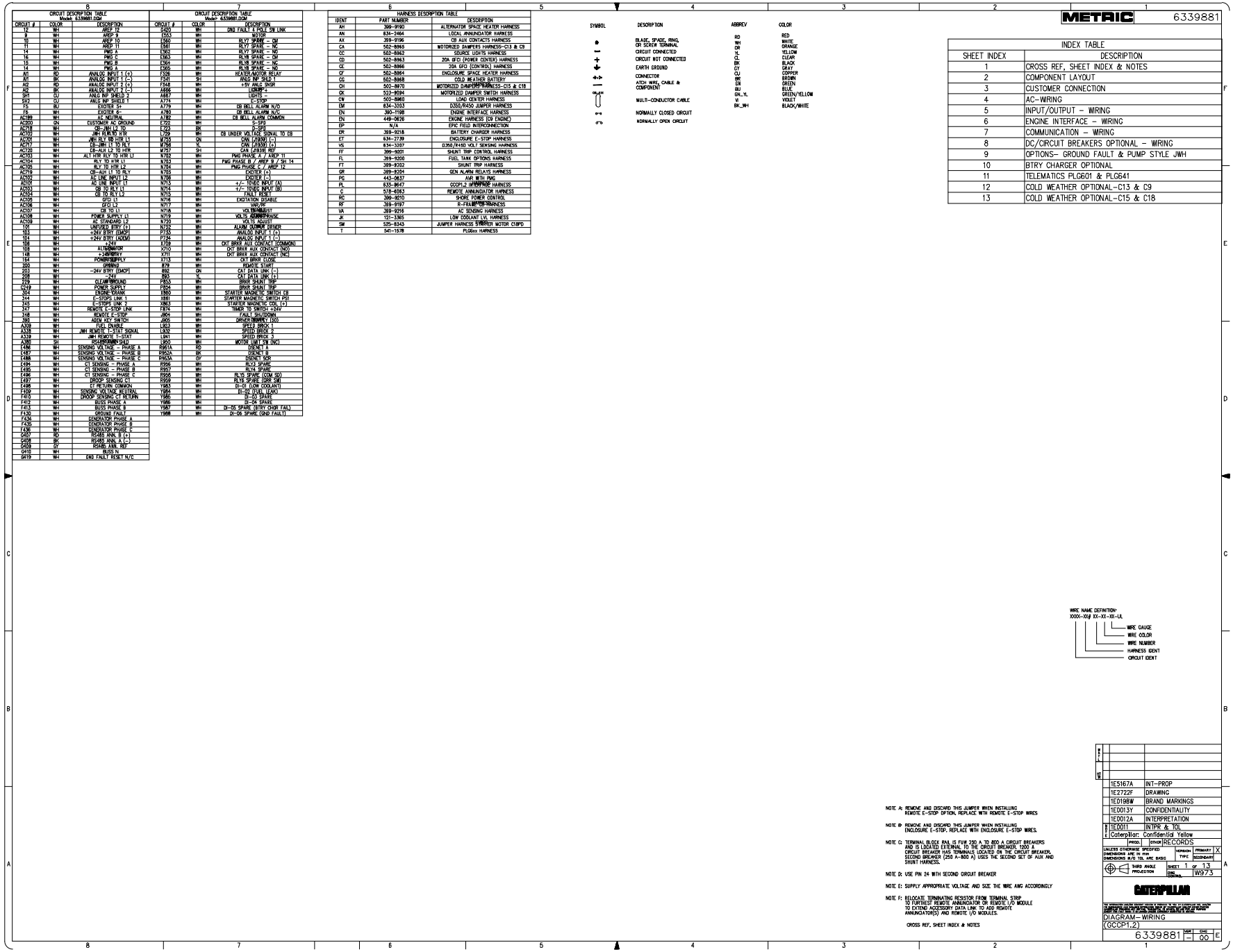

CIRCUIT DESCRIPTION TABLE Model: 6339881.DGM		
CIRCUIT #	COLOR	DESCRIPTION
12	WH	AREP 12
9	WH	AREP 9
10	WH	AREP 10
11	WH	AREP 11
14	WH	PMG A
16	WH	PMG C
15	WH	PMG B
14	WH	PMG A
A1	RD	ANALOG INPUT 1 (+)
A1	BK	ANALOG INPUT 1 (-)
A2	RD	ANALOG INPUT 2 (+)
A2	BK	ANALOG INPUT 2 (-)
SH1	CU	ANLG INP SHIELD 2
SH2	CU	ANLG INP SHIELD 1
F5	BU	EXCITER 5+
F6	WH	EXCITER 6–
AC199	WH	AC NEUTRAL
AC200	GN	CUSTOMER AC GROUND
AC715	WH	CB–JWH L2 TO
AC707	WH	JWH RLY/HD HTR
AC701	WH	JWH RLY HD HTR L1
AC717	WH	CB–JWH L1 TO RLY
AC720	WH	CB–AUI L2 TO HTR
AC703	WH	ALT HTR RLY TO HTR L1
AC704	WH	RLY TO HTR L1
AC705	WH	RLY TO HTR L2
AC719	WH	CB–AUI L1 TO RLY
AC702	WH	AC LINE INPUT L2
AC101	WH	AC LINE INPUT L1
AC103	WH	CB TO RLY L1
AC104	WH	CB TO RLY L2
AC105	WH	GFD L1
AC106	WH	GFD L2
AC107	WH	CB TO L1
AC108	WH	POWER SUPPLY L1
AC109	WH	AC STANDARD L2
100	WH	UNFUSED BTRY (C)
103	WH	+24V BTRY (EMCP)
104	WH	+24V BTRY (ADEM)
108	WH	+24V
108	WH	ALTERNATOR
108	WH	+24V BATTERY
154	WH	POWER SUPPLY
200	WH	GROUND
203	WH	–24V BTRY (EMCP)
208	WH	–24V
229	WH	CLEAR GROUND
C149	WH	POWER SUPPLY
304	WH	ENGINE CRANK
314	WH	E–STOPS LINK 1
345	WH	E–STOPS LINK 2
347	WH	REMOTE E–STOP LINK
348	WH	REMOTE E–STOP
380	WH	ADEM KEY SWITCH
A308	WH	FUEL ENABLE
A338	WH	JWH REMOTE T–STAT SIGNAL
A339	WH	JWH REMOTE T–STAT
A380	SH	DISCRIMINATOR
F486	WH	SENSING VOLTAGE – PHASE A
F487	WH	SENSING VOLTAGE – PHASE B
F488	WH	SENSING VOLTAGE – PHASE C
F494	WH	CT SENSING – PHASE A
F495	WH	CT SENSING – PHASE B
F496	WH	CT SENSING – PHASE C
F497	WH	DROOP SENSING CT
F498	WH	CT RETURN COMMON
F409	WH	SENSING VOLTAGE NEUTRAL
F410	WH	DROOP SENSING CT RETURN
F412	WH	BUSS PHASE A
F413	WH	BUSS PHASE B
F430	WH	GROUND FAULT
F434	WH	GENERATOR PHASE A
F435	WH	GENERATOR PHASE B
F436	WH	GENERATOR PHASE C
D457	RD	RS485 ANN. B (+)
D458	BK	RS485 ANN. A (–)
D459	GY	RS485 ANN. REF
D410	WH	BUSS N
D419	WH	GND FAULT RESET N/C

CIRCUIT DESCRIPTION TABLE Model: 6339881.DGM		
CIRCUIT #	COLOR	DESCRIPTION
D420	WH	GND FAULT 5 POLE SW LINK
F563	WH	MOTOR
E560	WH	RLY1 SPARE – CM
E561	WH	RLY1 SPARE – NC
E562	WH	RLY1 SPARE – NO
E563	WH	RLY8 SPARE – CM
E564	WH	RLY8 SPARE – NC
E565	WH	RLY8 SPARE – NO
F526	WH	HEATER/MOTOR RELAY
F547	SH	ANLG INP SHLD 1
F548	WH	+5V ANLG SNSR
A666	WH	LIGHT+
A667	WH	LIGHT–
X774	WH	E–STOP
A779	WH	CB BELL ALARM N/O
A780	WH	CB BELL ALARM N/C
A782	WH	CB BELL ALARM COMMON
C722	WH	S–SPD
F703	BK	P–SPD
L759	WH	CB UNDER VOLTAGE SIGNAL TO CB
M755	GN	CAN (J1939) (–)
M756	YL	CAN (J1939) (+)
M757	SH	CAN (J1939) REF
M702	WH	PMG PHASE A / AREP 11
M703	WH	PMG PHASE B / AREP 9 / SH 14
M704	WH	PMG PHASE C / AREP 12
M705	WH	EXCITER (+)
M706	WH	EXCITER (–)
N713	WH	+/– 10VDC INPUT (A)
N714	WH	+/– 10VDC INPUT (B)
N715	WH	FAULT RESET
N716	WH	EXCITATION DISABLE
N717	WH	VAR/PF
N718	WH	VOLTAGE TRIMMER
N719	WH	VOLTS ADJUST/RAISE
M720	WH	VOLTS ADJUST
N722	WH	ALARM SIGNAL DRIVER
P755	WH	ANALOG INPUT 1 (+)
P756	WH	ANALOG INPUT 1 (–)
M709	WH	CKT BRKR AUX CONTACT (COMMON)
X710	WH	CKT BRKR AUX CONTACT (NO)
X711	WH	CKT BRKR AUX CONTACT (NC)
X713	WH	CKT BRKR CLOSE
879	WH	REMOTE START
892	GN	CAT DATA LINK (–)
893	Y	CAT DATA LINK (+)
P853	WH	BRKR SHUNT TRIP
P854	WH	BRKR SHUNT TRIP
E800	WH	STARTER MAGNETIC SWITCH CB
X881	WH	STARTER MAGNETIC SWITCH PSI
X863	WH	STARTER MAGNETIC COIL (+)
F874	WH	TIMER TO SWITCH +24V
J804	WH	FAIL/SHUTDOWN
J805	WH	DRIVER BRKR/RLY (50)
L803	WH	SPEED BRICK 1
L932	WH	SPEED BRICK 2
L941	WH	SPEED BRICK 3
L950	WH	MOTOR LIGHT ON (NC)
R951A	RD	DSENET A
R952A	BK	DSENET B
R953A	GY	DSENET SCR
P896	WH	RLY3 SPARE
P897	WH	RLY4 SPARE
P898	WH	RLY5 SPARE (COM 52)
P899	WH	RLY6 SPARE (GRR SM)
Y953	WH	DI–01 (LOW COOLANT)
Y954	WH	DI–02 (FUEL LEAK)
Y955	WH	DI–03 SPARE
Y956	WH	DI–04 SPARE
Y957	WH	DI–05 SPARE (BTRY CHGR FAIL)
Y958	WH	DI–06 SPARE (GND FAULT)

HARNESS DESCRIPTION TABLE		
IDENT	PART NUMBER	DESCRIPTION
AH	399–9190	ALTERNATOR SPACE HEATER HARNESS
AN	834–2464	LOCAL ANNUNCIATOR HARNESS
AX	399–9196	CB AUX CONTACTS HARNESS
CA	502–8965	MOTORIZED DAMPERS HARNESS–C13 & C9
CC	502–8963	SOURCE LIGHTS HARNESS
CD	502–8963	20A GFCI (POWER CENTER) HARNESS
CE	502–8966	20A GFCI (CONTROL) HARNESS
CF	502–5964	ENCLOSURE SPACE HEATER HARNESS
CG	502–5968	COLD WEATHER BATTERY
CH	502–8970	MOTORIZED DAMPERS HARNESS–C15 & C18
CK	502–8094	MOTORIZED DAMPER SWITCH HARNESS
CW	502–8981	LOAD CENTER HARNESS
EM	834–3093	D350/R450 JUMPER HARNESS
EN	390–7198	ENGINE INTERFACE HARNESS
EN	449–0636	ENGINE HARNESS (C9 ENGINE)
EP	N/A	EPIC FIELD INTERCONNECTION
ER	399–9218	BATTERY CHARGER HARNESS
ET	634–2739	ENCLOSURE E–STOP HARNESS
VS	834–3207	D350/R450 VOLT SENSING HARNESS
FT	399–9201	SHUNT TRIP CONTROL HARNESS
FL	399–9200	FUEL TANK OPTIONS HARNESS
FT	399–9202	SHUNT TRIP HARNESS
GR	399–9204	GEN ALARM RELAYS HARNESS
PX	443–0637	AVR WITH PMG
PL	833–9647	GCCP1,2 INTERFACE HARNESS
C	578–6063	REMOTE ANNUNCIATOR HARNESS
RC	399–9210	SHORE POWER CONTROL
RF	399–9197	R–FRAME HARNESS
VA	399–9216	AC SENSING HARNESS
JK	121–1365	LOW COOLANT LVL HARNESS
SM	525–8345	JUMPER HARNESS STARTER MOTOR C18PD
T	541–1578	PL66xx HARNESS

SYMBOL	DESCRIPTION	ABBREV	COLOR
●	BLADE, SPADE, RING, OR SCREW TERMINAL	RD	RED
		WH	WHITE
		OR	ORANGE
	CIRCUIT CONNECTED	YL	YELLOW
	CIRCUIT NOT CONNECTED	CL	CLEAR
		BK	BLACK
	EARTH GROUND	GY	GRAY
		CU	COPPER
	CONNECTOR	BR	BROWN
		GN	GREEN
	ATCH WIRE, CABLE & COMPONENT	BU	BLUE
		GN_YL	GREEN/YELLOW
	MULTI–CONDUCTOR CABLE	VI	VIOLET
		BK_WH	BLACK/WHITE
	NORMALLY CLOSED CIRCUIT		
	NORMALLY OPEN CIRCUIT		

INDEX TABLE	
SHEET INDEX	DESCRIPTION
1	CROSS REF, SHEET INDEX & NOTES
2	COMPONENT LAYOUT
3	CUSTOMER CONNECTION
4	AC–WIRING
5	INPUT/OUTPUT – WIRING
6	ENGINE INTERFACE – WIRING
7	COMMUNICATION – WIRING
8	DC/CIRCUIT BREAKERS OPTIONAL – WIRING
9	OPTIONS– GROUND FAULT & PUMP STYLE JWH
10	BTRY CHARGER OPTIONAL
11	TELEMATICS PLG601 & PLG641
12	COLD WEATHER OPTIONAL–C13 & C9
13	COLD WEATHER OPTIONAL–C15 & C18

METRIC 6339881

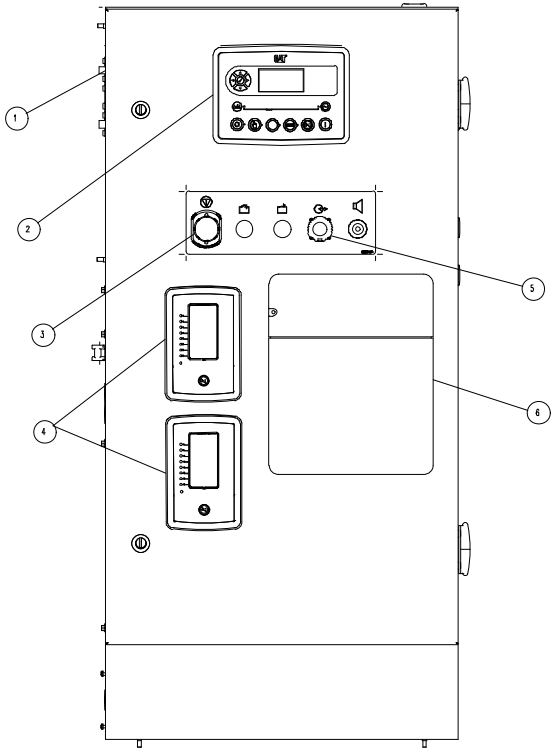

CONTROL PANEL
FRONT VIEW

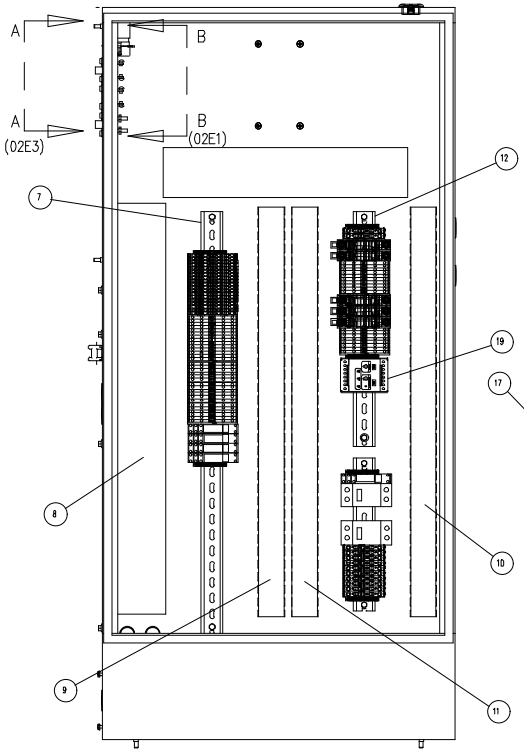

CONTROL PANEL
INSIDE VIEW

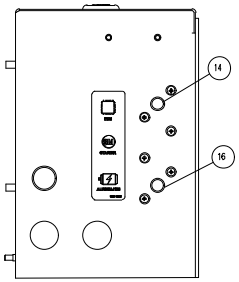

VIEW A–A
(DC–POWER DISTRIBUTION)
(CIRCUIT BREAKERS)
(02E5)

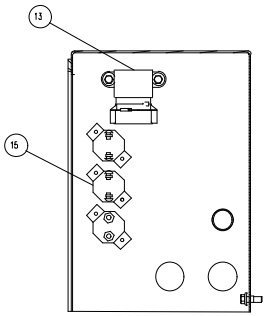

VIEW B–B
(DC–POWER DISTRIBUTION)
(CIRCUIT BREAKERS)
(02E5)

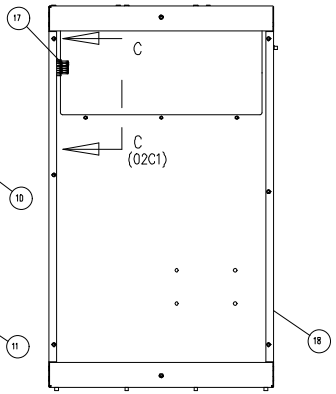

BREAKER BOX

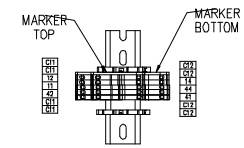

SECTION C–C
(SHUNT TRIP CB & AUX CONTACTS)
(374–5756 & 615–7965)
(02C3)

1 GCCP 1.2 CONTROL PANEL
2 GCCP 1.2 CONTROLLER
3 ESTOP PUSH BUTTON
4 DSE2548 ANNUNCIATOR (OPTIONAL)
5 SERVICE TOOL CONNECTOR
6 DOCUMENT HOLDER
7 LOW ENERGY TERMINAL STRIP (DI,DO,RO,AI)
8 LOW ENERGY–DC CONTROL PANEL WIRING DUCT
9 LOW ENERGY–DC CUSTOMER WIRING DUCT
10 HIGH ENERGY AC/DC CONTROL PANEL WIRING DUCT
11 HIGH ENERGY AC/DC CUSTOMER CONNECTION DUCT
12 HIGH ENERGY TERMINAL AC/DC STRIP
13 SMMS RELAY
14 CIRCUIT BREAKER–ECM
15 CIRCUIT BREAKER–STARTER
16 CIRCUIT BREAKER–ALTERNATOR
17 BREAKER TERMINAL STRIP (OPTIONAL BREAKER)
18 BREAKER BOX
19 OPTIONAL GROUND FAULT RELAY

FOR NOTES SEE SHEET 1
COMPONENT LAYOUT

1E5167A	INT–PROP
1E2722F	DRAWING
1E0198W	BRAND MARKINGS
1E0013Y	CONFIDENTIALITY
1E0012A	INTERPRETATION
1E0011	INTPR & TOL
Caterpillar:	Confidential Yellow
PROD.	OTHER RECORDS

UNLESS OTHERWISE SPECIFIED DIMENSIONS ARE IN mm DIMENSIONS W/O TOL ARE BASIC
VERSION TYPE: PRIMARY X SECONDARY
THIRD ANGLE PROJECTION
SHEET 2 OF 13
DWG NUMBER W973

CATERPILLAR

DIAGRAM–WIRING
(GCCP1.2)
6339881 – 00 E

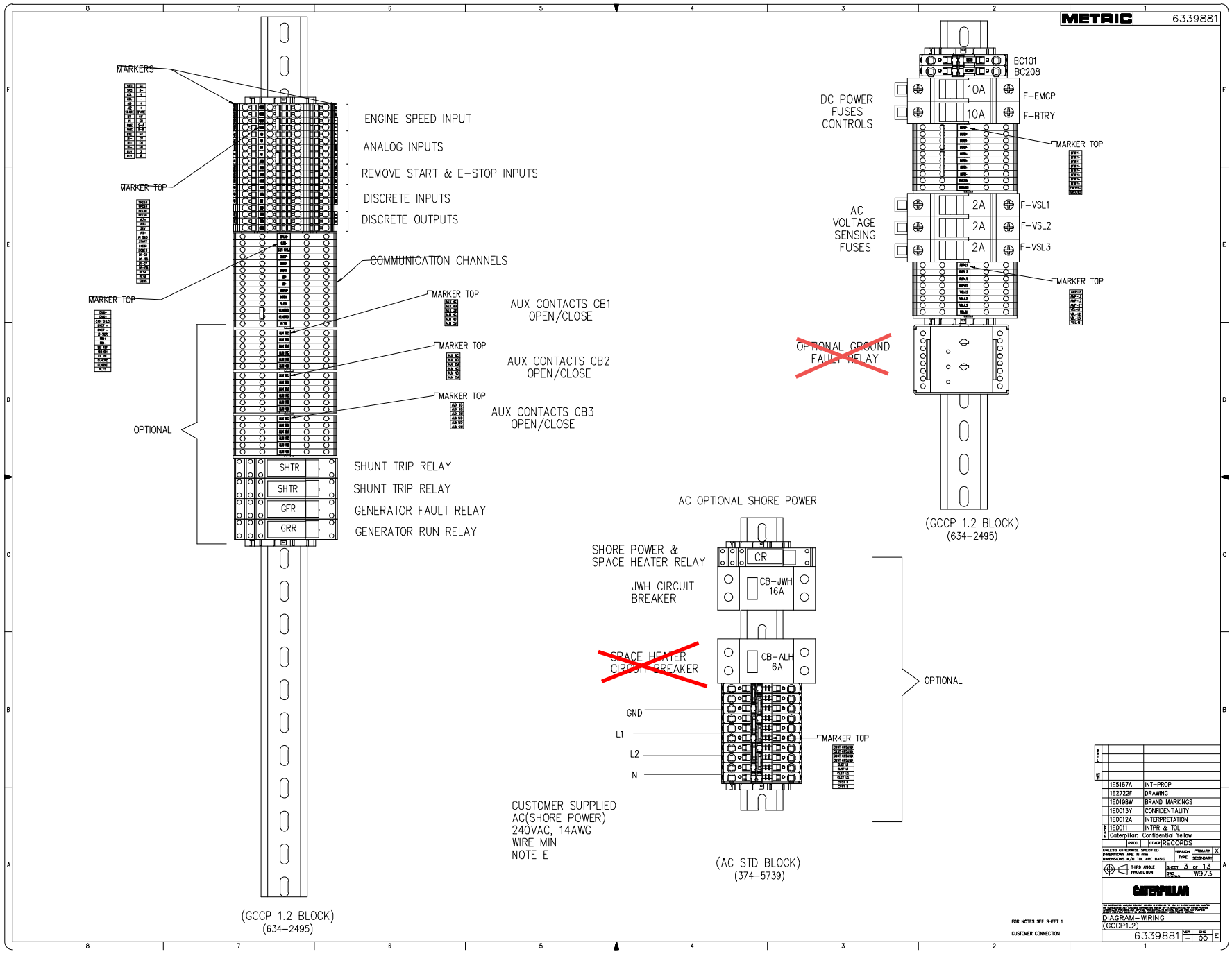
METRIC
6339881
MARKERS
MARKER TOP
MARKER TOP
ENGINE SPEED INPUT
ANALOG INPUTS
REMOVE START & E-STOP INPUTS
DISCRETE INPUTS
DISCRETE OUTPUTS
COMMUNICATION CHANNELS
MARKER TOP
AUX CONTACTS CB1 OPEN/CLOSE
MARKER TOP
AUX CONTACTS CB2 OPEN/CLOSE
MARKER TOP
AUX CONTACTS CB3 OPEN/CLOSE
OPTIONAL
SHTR
SHTR
GFR
GRR
SHUNT TRIP RELAY
SHUNT TRIP RELAY
GENERATOR FAULT RELAY
GENERATOR RUN RELAY
(GCCP 1.2 BLOCK)
(634-2495)
BC101
BC208
DC POWER FUSES CONTROLS
10A
F-EMCP
10A
F-BTRY
MARKER TOP
AC VOLTAGE SENSING FUSES
2A
F-VSL1
2A
F-VSL2
2A
F-VSL3
MARKER TOP
OPTIONAL GROUND FAULT RELAY
(GCCP 1.2 BLOCK)
(634-2495)
AC OPTIONAL SHORE POWER
SHORE POWER & SPACE HEATER RELAY
CR
JWH CIRCUIT BREAKER
CB-JWH 16A
SPACE HEATER CIRCUIT BREAKER
CB-ALH 6A
OPTIONAL
GND
L1
L2
N
MARKER TOP
CUSTOMER SUPPLIED AC(SHORE POWER) 240VAC, 14AWG WIRE MIN NOTE E
(AC STD BLOCK)
(374-5739)
1E5167A INT-PROP
1E2722F DRAWING
1ED198W BRAND MARKINGS
1ED013Y CONFIDENTIALITY
1ED012A INTERPRETATION
1E0011 INTPR & TOL
Caterpillar: Confidential Yellow
RECORDS
PRIMARY
SECONDARY
SHEET 3 OF 13
W973
CATERPILLAR
DIAGRAM-WIRING
(GCCP1.2)
6339881
00
FOR NOTES SEE SHEET 1
CUSTOMER CONNECTION

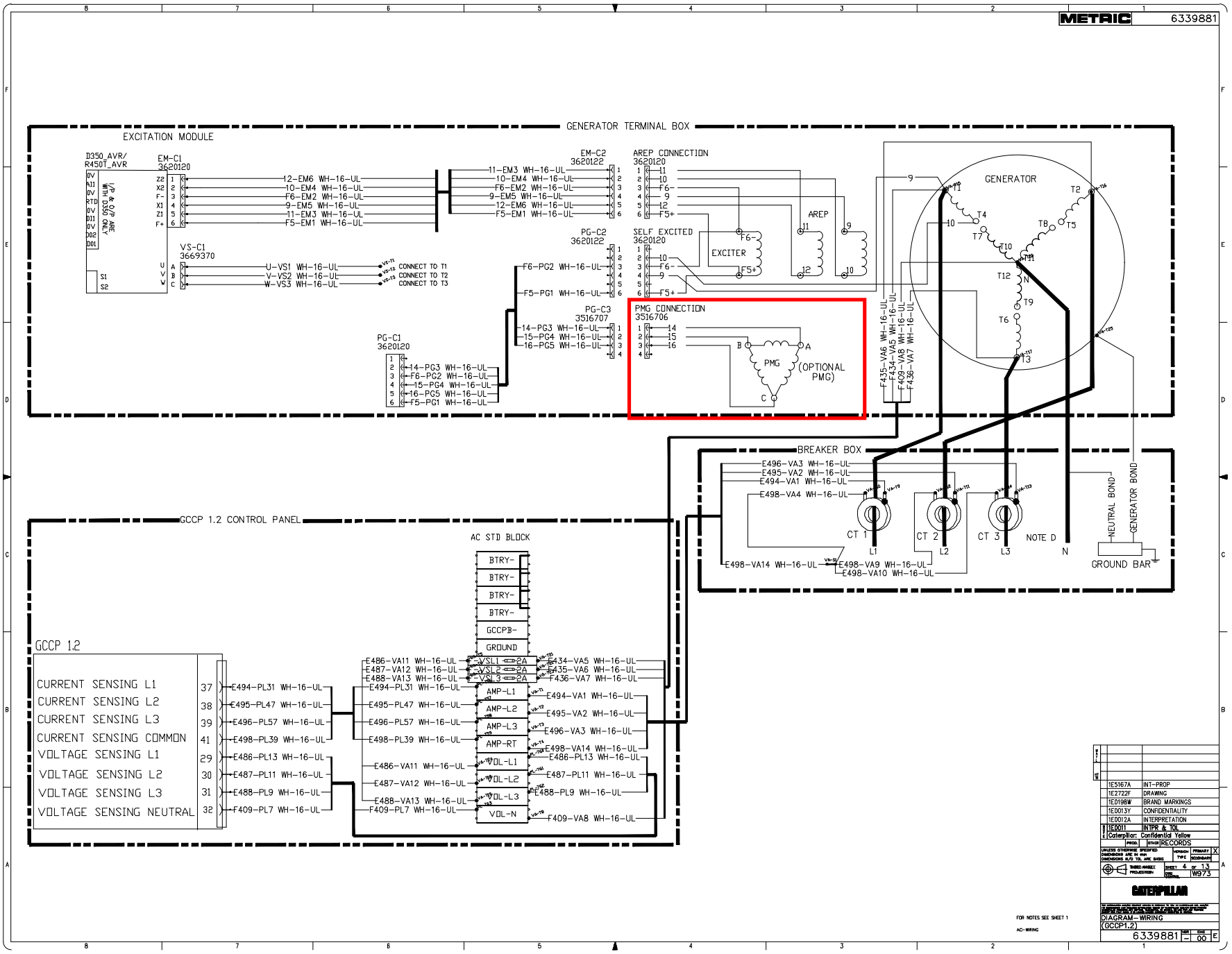
METRIC
6339881
GENERATOR TERMINAL BOX
EXCITATION MODULE
D350_AVR/
R450T_AVR
EM-C1
3620120
VS-C1
3669370
EM-C2
3620122
PG-C2
3620122
PG-C3
3516707
PG-C1
3620120
AREP CONNECTION
3620120
SELF EXCITED
3620120
EXCITER
AREP
PMG CONNECTION
3516706
PMG
(OPTIONAL
PMG)
GENERATOR
BREAKER BOX
CT 1
CT 2
CT 3
NOTE D
NEUTRAL BOND
GENERATOR BOND
GROUND BAR
GCCP 1.2 CONTROL PANEL
AC STD BLOCK
GCCP 1.2
CURRENT SENSING L1
CURRENT SENSING L2
CURRENT SENSING L3
CURRENT SENSING COMMON
VOLTAGE SENSING L1
VOLTAGE SENSING L2
VOLTAGE SENSING L3
VOLTAGE SENSING NEUTRAL
BTRY-
GCCPB-
GROUND
AMP-L1
AMP-L2
AMP-L3
AMP-RT
VOL-L1
VOL-L2
VOL-L3
VOL-N
FOR NOTES SEE SHEET 1
AC-WIRING
1E5167A INT-PROP
1E2722F DRAWING
1E0198W BRAND MARKINGS
1E0013Y CONFIDENTIALITY
1E0012A INTERPRETATION
1E0011 INTPR & TOL
Caterpillar: Confidential Yellow
RECORDS
CATERPILLAR
DIAGRAM-WIRING
(GCCP1.2)
6339881
00

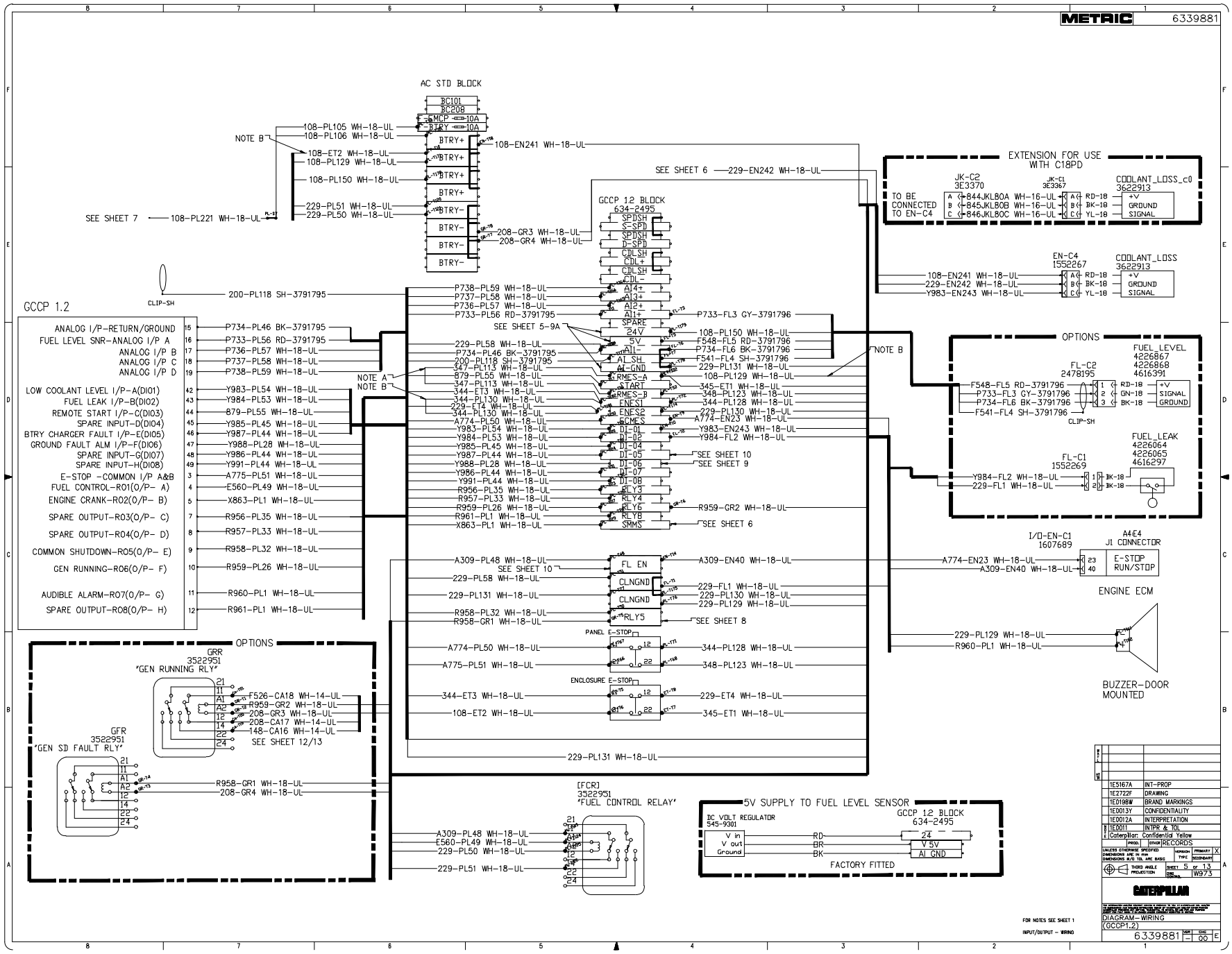
METRIC
6339881
AC STD BLOCK
BC101
BC208
MCP 10A
BTRY 10A
BTRY+
BTRY-
NOTE B
108-PL105 WH-18-UL
108-PL106 WH-18-UL
108-ET2 WH-18-UL
108-PL129 WH-18-UL
108-PL150 WH-18-UL
229-PL51 WH-18-UL
229-PL50 WH-18-UL
108-EN241 WH-18-UL
SEE SHEET 7
108-PL221 WH-18-UL
208-GR3 WH-18-UL
208-GR4 WH-18-UL
GCCP 12 BLOCK
634-2495
SPDSH
S-SPD
SPDSH
D-SPD
CDLSH
CDL+
CDLSH
CDL-
SEE SHEET 6
229-EN242 WH-18-UL
EXTENSION FOR USE WITH C18PD
JK-C2
3E3370
JK-C1
3E3367
TO BE CONNECTED TO EN-C4
844JKL80A WH-16-UL
845JKL80B WH-16-UL
846JKL80C WH-16-UL
RD-18
BK-18
YL-18
COOLANT_LOSS_C0
3622913
+V
GROUND
SIGNAL
EN-C4
1552267
COOLANT_LOSS
3622913
108-EN241 WH-18-UL
229-EN242 WH-18-UL
Y983-EN243 WH-18-UL
CLIP-SH
200-PL118 SH-3791795
GCCP 1.2
ANALOG I/P-RETURN/GROUND
FUEL LEVEL SNR-ANALOG I/P A
ANALOG I/P B
ANALOG I/P C
ANALOG I/P D
LOW COOLANT LEVEL I/P-A(DI01)
FUEL LEAK I/P-B(DI02)
REMOTE START I/P-C(DI03)
SPARE INPUT-D(DI04)
BTRY CHARGER FAULT I/P-E(DI05)
GROUND FAULT ALM I/P-F(DI06)
SPARE INPUT-G(DI07)
SPARE INPUT-H(DI08)
E-STOP -COMMON I/P A&B
FUEL CONTROL-R01(O/P- A)
ENGINE CRANK-R02(O/P- B)
SPARE OUTPUT-R03(O/P- C)
SPARE OUTPUT-R04(O/P- D)
COMMON SHUTDOWN-R05(O/P- E)
GEN RUNNING-R06(O/P- F)
AUDIBLE ALARM-R07(O/P- G)
SPARE OUTPUT-R08(O/P- H)
P734-PL46 BK-3791795
P733-PL56 RD-3791795
P736-PL57 WH-18-UL
P737-PL58 WH-18-UL
P738-PL59 WH-18-UL
Y983-PL54 WH-18-UL
Y984-PL53 WH-18-UL
879-PL55 WH-18-UL
Y985-PL45 WH-18-UL
Y987-PL44 WH-18-UL
Y988-PL28 WH-18-UL
Y986-PL44 WH-18-UL
Y991-PL44 WH-18-UL
A775-PL51 WH-18-UL
E560-PL49 WH-18-UL
X863-PL1 WH-18-UL
R956-PL35 WH-18-UL
R957-PL33 WH-18-UL
R958-PL32 WH-18-UL
R959-PL26 WH-18-UL
R960-PL1 WH-18-UL
R961-PL1 WH-18-UL
NOTE A
NOTE B
P738-PL59 WH-18-UL
P737-PL58 WH-18-UL
P736-PL57 WH-18-UL
P733-PL56 RD-3791795
AI4+
AI3+
AI2+
AI1+
SPARE
24V
5V
AI1-
AI_SH
AI-GND
RMES-A
START
RMES-B
ENES1
ENES2
SCMES
DI-01
DI-02
DI-04
DI-05
DI-06
DI-07
DI-08
RLY3
RLY4
RLY6
RLY8
SMMS
P733-FL3 GY-3791796
F548-FL5 RD-3791796
P734-FL6 BK-3791796
F541-FL4 SH-3791796
108-PL150 WH-18-UL
229-PL58 WH-18-UL
P734-PL46 BK-3791795
200-PL118 SH-3791795
347-PL113 WH-18-UL
879-PL55 WH-18-UL
347-PL113 WH-18-UL
344-ET3 WH-18-UL
344-PL130 WH-18-UL
229-ET4 WH-18-UL
344-PL130 WH-18-UL
A774-PL50 WH-18-UL
Y983-PL54 WH-18-UL
Y984-PL53 WH-18-UL
Y985-PL45 WH-18-UL
Y987-PL44 WH-18-UL
Y988-PL28 WH-18-UL
Y986-PL44 WH-18-UL
Y991-PL44 WH-18-UL
R956-PL35 WH-18-UL
R957-PL33 WH-18-UL
R959-PL26 WH-18-UL
R961-PL1 WH-18-UL
X863-PL1 WH-18-UL
108-PL129 WH-18-UL
345-ET1 WH-18-UL
348-PL123 WH-18-UL
344-PL128 WH-18-UL
229-PL130 WH-18-UL
A774-EN23 WH-18-UL
Y983-EN243 WH-18-UL
Y984-FL2 WH-18-UL
SEE SHEET 10
SEE SHEET 9
SEE SHEET 6
R959-GR2 WH-18-UL
SEE SHEET 5-9A
NOTE B
OPTIONS
FUEL_LEVEL
4226867
4226868
4616391
FL-C2
2478195
F548-FL5 RD-3791796
P733-FL3 GY-3791796
P734-FL6 BK-3791796
F541-FL4 SH-3791796
RD-18
GN-18
BK-18
+V
SIGNAL
GROUND
CLIP-SH
FUEL_LEAK
4226064
4226065
4616297
FL-C1
1552269
Y984-FL2 WH-18-UL
229-FL1 WH-18-UL
I/O-EN-C1
1607689
A4-E4
J1 CONNECTOR
A774-EN23 WH-18-UL
A309-EN40 WH-18-UL
E-STOP
RUN/STOP
ENGINE ECM
229-PL129 WH-18-UL
R960-PL1 WH-18-UL
BUZZER-DOOR MOUNTED
A309-PL48 WH-18-UL
SEE SHEET 10
229-PL58 WH-18-UL
229-PL131 WH-18-UL
R958-PL32 WH-18-UL
R958-GR1 WH-18-UL
FL EN
CLNGND
CLNGND
RLY5
A309-EN40 WH-18-UL
229-FL1 WH-18-UL
229-PL130 WH-18-UL
229-PL129 WH-18-UL
SEE SHEET 8
PANEL E-STOP
ENCLOSURE E-STOP
A774-PL50 WH-18-UL
A775-PL51 WH-18-UL
344-PL128 WH-18-UL
348-PL123 WH-18-UL
344-ET3 WH-18-UL
108-ET2 WH-18-UL
229-ET4 WH-18-UL
345-ET1 WH-18-UL
229-PL131 WH-18-UL
OPTIONS
GRR
3522951
"GEN RUNNING RLY"
GFR
3522951
"GEN SD FAULT RLY"
F526-CA18 WH-14-UL
R959-GR2 WH-18-UL
208-GR3 WH-18-UL
208-CA17 WH-14-UL
148-CA16 WH-14-UL
SEE SHEET 12/13
R958-GR1 WH-18-UL
208-GR4 WH-18-UL
[FCR]
3522951
"FUEL CONTROL RELAY"
A309-PL48 WH-18-UL
E560-PL49 WH-18-UL
229-PL50 WH-18-UL
229-PL51 WH-18-UL
5V SUPPLY TO FUEL LEVEL SENSOR
DC VOLT REGULATOR
545-9301
V in
V out
Ground
RD
BR
BK
GCCP 12 BLOCK
634-2495
24
V 5V
AI GND
FACTORY FITTED
FOR NOTES SEE SHEET 1
INPUT/OUTPUT - WIRING
1E5167A INT-PROP
1E2722F DRAWING
1E0198W BRAND MARKINGS
1E0013Y CONFIDENTIALITY
1E0012A INTERPRETATION
1E0011 INTPR & TOL
Caterpillar: Confidential Yellow
RECORDS
UNLESS OTHERWISE SPECIFIED
DIMENSIONS ARE IN mm
DIMENSIONS A/D TOL ARE BASIC
THIRD ANGLE PROJECTION
SHEET 5 OF 13
DRG CONTROL W973
CATERPILLAR
DIAGRAM-WIRING
(GCCP1.2)
6339881
DRAWING NO. 00
SIZE E

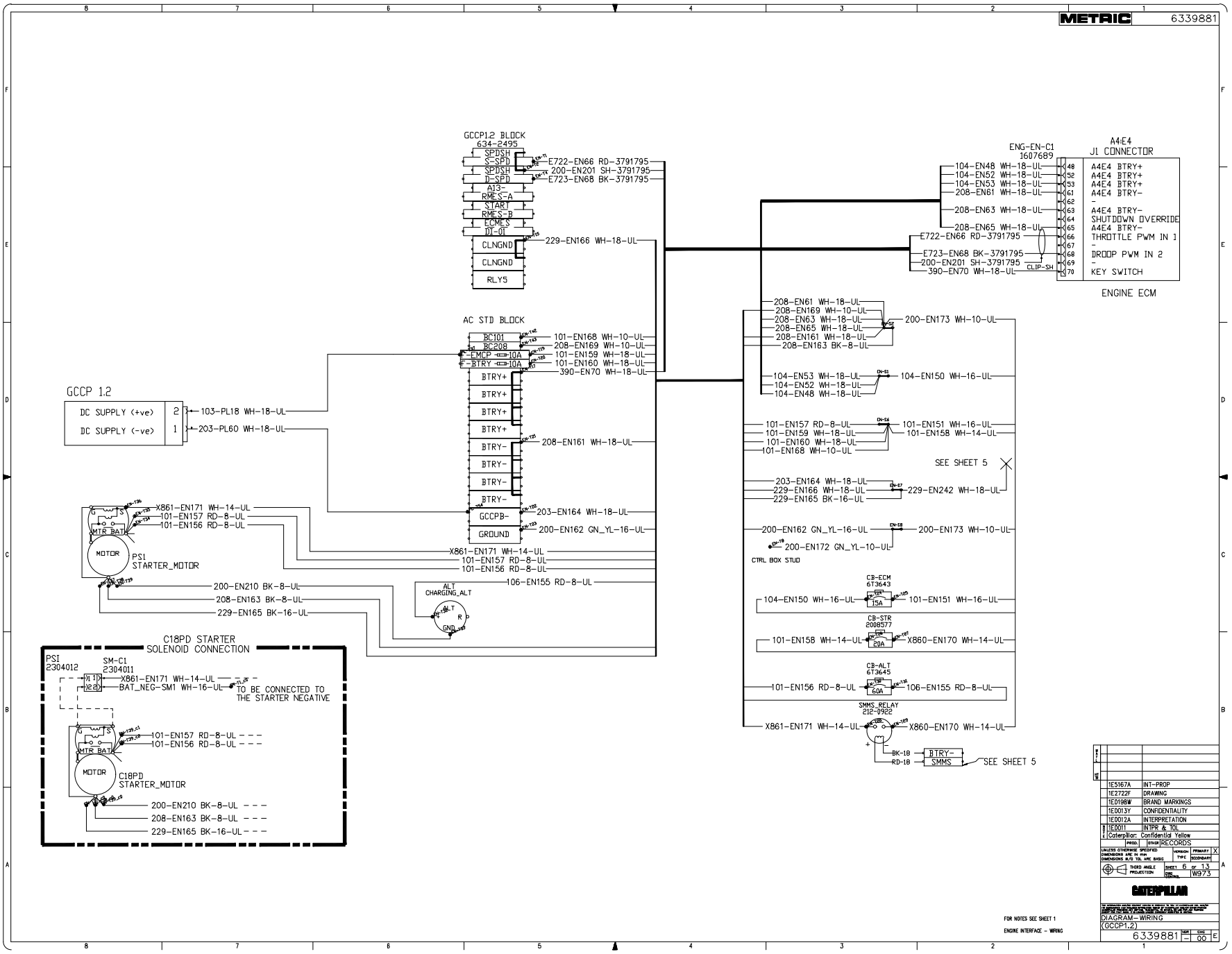
METRIC 6339881
GCCP1.2 BLOCK
634-2495
SPDSH
S-SPD
SPDSH
D-SPD
A13-
RMES-A
START
RMES-B
ECMES
DI-01
CLNGND
CLNGND
RLY5
E722-EN66 RD-3791795
200-EN201 SH-3791795
E723-EN68 BK-3791795
229-EN166 WH-18-UL
AC STD BLOCK
BC101
BC208
F-EMCP 10A
F-BTRY 10A
BTRY+
BTRY+
BTRY+
BTRY+
BTRY-
BTRY-
BTRY-
BTRY-
GCCPB-
GROUND
101-EN168 WH-10-UL
208-EN169 WH-10-UL
101-EN159 WH-18-UL
101-EN160 WH-18-UL
390-EN70 WH-18-UL
208-EN161 WH-18-UL
203-EN164 WH-18-UL
200-EN162 GN_YL-16-UL
GCCP 1.2
DC SUPPLY (+ve)
DC SUPPLY (-ve)
103-PL18 WH-18-UL
203-PL60 WH-18-UL
X861-EN171 WH-14-UL
101-EN157 RD-8-UL
101-EN156 RD-8-UL
MTR BAT
MOTOR
PSI
STARTER_MOTOR
200-EN210 BK-8-UL
208-EN163 BK-8-UL
229-EN165 BK-16-UL
106-EN155 RD-8-UL
ALT
CHARGING_ALT
ALT
R
GND
C18PD STARTER
SOLENOID CONNECTION
PSI
2304012
SM-C1
2304011
X861-EN171 WH-14-UL
BAT_NEG-SM1 WH-16-UL
TO BE CONNECTED TO
THE STARTER NEGATIVE
101-EN157 RD-8-UL
101-EN156 RD-8-UL
MTR BAT
MOTOR
C18PD
STARTER_MOTOR
200-EN210 BK-8-UL
208-EN163 BK-8-UL
229-EN165 BK-16-UL
ENG-EN-C1
1607689
A4:E4
J1 CONNECTOR
104-EN48 WH-18-UL
104-EN52 WH-18-UL
104-EN53 WH-18-UL
208-EN61 WH-18-UL
208-EN63 WH-18-UL
208-EN65 WH-18-UL
E722-EN66 RD-3791795
E723-EN68 BK-3791795
200-EN201 SH-3791795
390-EN70 WH-18-UL
CLIP-SH
A4E4 BTRY+
A4E4 BTRY+
A4E4 BTRY+
A4E4 BTRY-
A4E4 BTRY-
SHUTDOWN OVERRIDE
A4E4 BTRY-
THROTTLE PWM IN 1
DROOP PWM IN 2
KEY SWITCH
ENGINE ECM
208-EN61 WH-18-UL
208-EN169 WH-10-UL
208-EN63 WH-18-UL
208-EN65 WH-18-UL
208-EN161 WH-18-UL
208-EN163 BK-8-UL
200-EN173 WH-10-UL
104-EN53 WH-18-UL
104-EN52 WH-18-UL
104-EN48 WH-18-UL
104-EN150 WH-16-UL
101-EN157 RD-8-UL
101-EN159 WH-18-UL
101-EN160 WH-18-UL
101-EN168 WH-10-UL
101-EN151 WH-16-UL
101-EN158 WH-14-UL
SEE SHEET 5
203-EN164 WH-18-UL
229-EN166 WH-18-UL
229-EN165 BK-16-UL
229-EN242 WH-18-UL
200-EN162 GN_YL-16-UL
200-EN173 WH-10-UL
200-EN172 GN_YL-10-UL
CTRL BOX STUD
CB-ECM
6T3643
15A
104-EN150 WH-16-UL
101-EN151 WH-16-UL
CB-STR
2008577
20A
101-EN158 WH-14-UL
X860-EN170 WH-14-UL
CB-ALT
6T3645
60A
101-EN156 RD-8-UL
106-EN155 RD-8-UL
SMMS_RELAY
212-0922
X861-EN171 WH-14-UL
X860-EN170 WH-14-UL
BK-18
RD-18
BTRY-
SMMS
SEE SHEET 5
1E5167A INT-PROP
1E2722F DRAWING
1E0198W BRAND MARKINGS
1E0013Y CONFIDENTIALITY
1E0012A INTERPRETATION
1E0011 INTPR & TOL
Caterpillar: Confidential Yellow
PROD. OTHER RECORDS
UNLESS OTHERWISE SPECIFIED DIMENSIONS ARE IN mm DIMENSIONS B/O TOL ARE BASIC
VERSION TYPE PRIMARY X SECONDARY
THIRD ANGLE PROJECTION
SHEET 6 OF 13
DWG SIZE W973
CATERPILLAR
DIAGRAM-WIRING
(GCCP1.2)
6339881 - 00 E
FOR NOTES SEE SHEET 1
ENGINE INTERFACE - WIRING

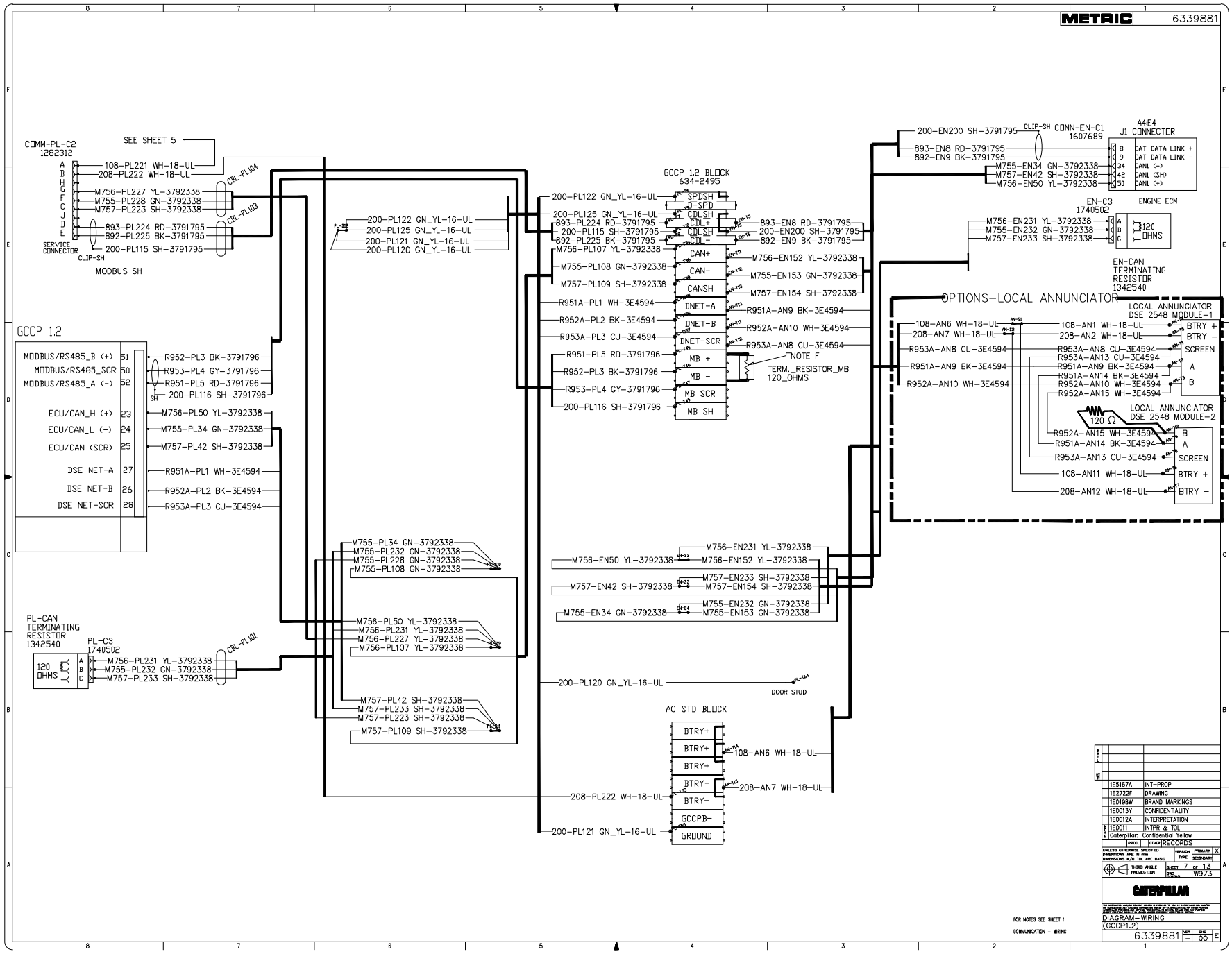
METRIC
6339881
SEE SHEET 5
COMM-PL-C2
1282312
108-PL221 WH-18-UL
208-PL222 WH-18-UL
M756-PL227 YL-3792338
M755-PL228 GN-3792338
M757-PL223 SH-3792338
893-PL224 RD-3791795
892-PL225 BK-3791795
200-PL115 SH-3791795
CBL-PL104
CBL-PL103
SERVICE CONNECTOR
CLIP-SH
MODBUS SH
GCCP 1.2
MODBUS/RS485_B (+) 51
MODBUS/RS485_SCR 50
MODBUS/RS485_A (-) 52
R952-PL3 BK-3791796
R953-PL4 GY-3791796
R951-PL5 RD-3791796
200-PL116 SH-3791796
ECU/CAN_H (+) 23
ECU/CAN_L (-) 24
ECU/CAN (SCR) 25
M756-PL50 YL-3792338
M755-PL34 GN-3792338
M757-PL42 SH-3792338
DSE NET-A 27
DSE NET-B 26
DSE NET-SCR 28
R951A-PL1 WH-3E4594
R952A-PL2 BK-3E4594
R953A-PL3 CU-3E4594
PL-CAN TERMINATING RESISTOR
1342540
PL-C3
1740502
120 OHMS
M756-PL231 YL-3792338
M755-PL232 GN-3792338
M757-PL233 SH-3792338
CBL-PL101
200-PL122 GN_YL-16-UL
200-PL125 GN_YL-16-UL
200-PL115 SH-3791795
200-PL121 GN_YL-16-UL
200-PL120 GN_YL-16-UL
GCCP 1.2 BLOCK
634-2495
SPDSH
J1939-SPD
CDLSH
CDL+
CDL-
CAN+
CAN-
CANSH
DNET-A
DNET-B
DNET-SCR
MB +
MB -
MB SCR
MB SH
M756-PL107 YL-3792338
M755-PL108 GN-3792338
M757-PL109 SH-3792338
R951A-PL1 WH-3E4594
R952A-PL2 BK-3E4594
R953A-PL3 CU-3E4594
R951-PL5 RD-3791796
R952-PL3 BK-3791796
R953-PL4 GY-3791796
200-PL116 SH-3791796
893-EN8 RD-3791795
200-EN200 SH-3791795
892-EN9 BK-3791795
M756-EN152 YL-3792338
M755-EN153 GN-3792338
M757-EN154 SH-3792338
R951A-AN9 BK-3E4594
R952A-AN10 WH-3E4594
R953A-AN8 CU-3E4594
NOTE F
TERM._RESISTOR_MB
120_OHMS
M755-PL34 GN-3792338
M755-PL232 GN-3792338
M755-PL228 GN-3792338
M755-PL108 GN-3792338
M756-PL50 YL-3792338
M756-PL231 YL-3792338
M756-PL227 YL-3792338
M756-PL107 YL-3792338
M757-PL42 SH-3792338
M757-PL233 SH-3792338
M757-PL223 SH-3792338
M757-PL109 SH-3792338
M756-EN231 YL-3792338
M756-EN50 YL-3792338
M756-EN152 YL-3792338
M757-EN233 SH-3792338
M757-EN42 SH-3792338
M757-EN154 SH-3792338
M755-EN232 GN-3792338
M755-EN34 GN-3792338
M755-EN153 GN-3792338
200-PL120 GN_YL-16-UL
DOOR STUD
AC STD BLOCK
BTRY+
BTRY+
BTRY+
BTRY-
BTRY-
GCCPB-
GROUND
108-AN6 WH-18-UL
208-AN7 WH-18-UL
208-PL222 WH-18-UL
200-PL121 GN_YL-16-UL
200-EN200 SH-3791795
CLIP-SH
CONN-EN-C1
1607689
893-EN8 RD-3791795
892-EN9 BK-3791795
M755-EN34 GN-3792338
M757-EN42 SH-3792338
M756-EN50 YL-3792338
A4E4
J1 CONNECTOR
B CAT DATA LINK +
9 CAT DATA LINK -
34 CAN1 (-)
42 CAN1 (SH)
50 CAN1 (+)
EN-C3
1740502
ENGINE ECM
M756-EN231 YL-3792338
M755-EN232 GN-3792338
M757-EN233 SH-3792338
120 OHMS
EN-CAN TERMINATING RESISTOR
1342540
OPTIONS-LOCAL ANNUNCIATOR
LOCAL ANNUNCIATOR DSE 2548 MODULE-1
108-AN6 WH-18-UL
208-AN7 WH-18-UL
R953A-AN8 CU-3E4594
R951A-AN9 BK-3E4594
R952A-AN10 WH-3E4594
108-AN1 WH-18-UL
208-AN2 WH-18-UL
R953A-AN8 CU-3E4594
R953A-AN13 CU-3E4594
R951A-AN9 BK-3E4594
R952A-AN10 WH-3E4594
R952A-AN15 WH-3E4594
BTRY +
BTRY -
SCREEN
A
B
LOCAL ANNUNCIATOR DSE 2548 MODULE-2
120 Ω
R952A-AN15 WH-3E4594
R951A-AN14 BK-3E4594
R953A-AN13 CU-3E4594
108-AN11 WH-18-UL
208-AN12 WH-18-UL
B
A
SCREEN
BTRY +
BTRY -
FOR NOTES SEE SHEET 1
COMMUNICATION - WIRING
1E5167A INT-PROP
1E2722F DRAWING
1ED198W BRAND MARKINGS
1ED013Y CONFIDENTIALITY
1ED012A INTERPRETATION
1E0011 INTPR & TOL
Caterpillar: Confidential Yellow
RECORDS
UNLESS OTHERWISE SPECIFIED
DIMENSIONS ARE IN mm
DIMENSIONS A/D TOL ARE BASIC
THIRD ANGLE PROJECTION
SHEET 7 OF 13
W973
CATERPILLAR
DIAGRAM-WIRING
(GCCP1.2)
6339881
00

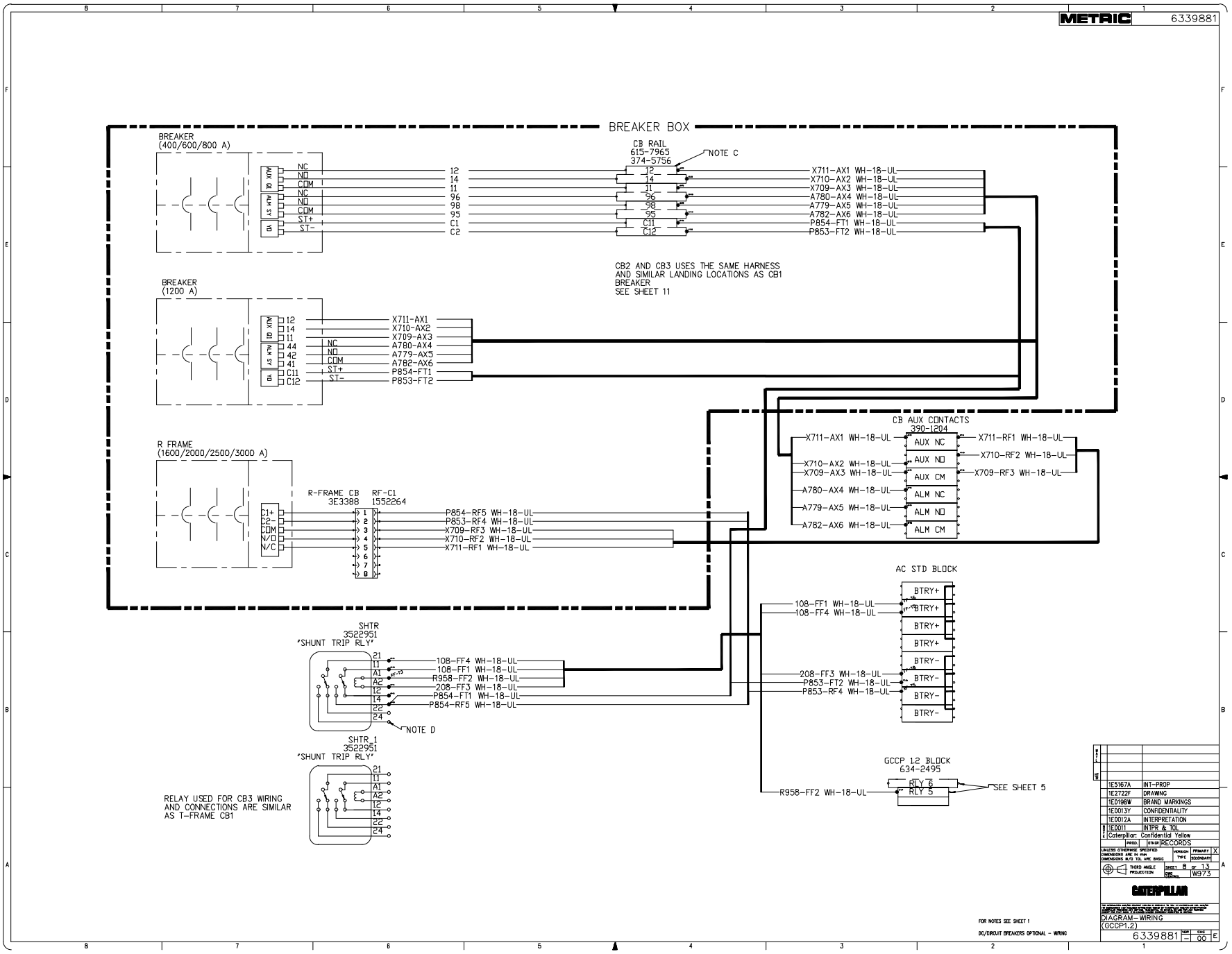
METRIC
6339881
BREAKER BOX
BREAKER
(400/600/800 A)
NC
NO
COM
NC
NO
COM
ST+
ST-
12
14
11
96
98
95
C1
C2
CB RAIL
615-7965
374-5756
NOTE C
X711-AX1 WH-18-UL
X710-AX2 WH-18-UL
X709-AX3 WH-18-UL
A780-AX4 WH-18-UL
A779-AX5 WH-18-UL
A782-AX6 WH-18-UL
P854-FT1 WH-18-UL
P853-FT2 WH-18-UL
CB2 AND CB3 USES THE SAME HARNESS
AND SIMILAR LANDING LOCATIONS AS CB1
BREAKER
SEE SHEET 11
BREAKER
(1200 A)
X711-AX1
X710-AX2
X709-AX3
A780-AX4
A779-AX5
A782-AX6
P854-FT1
P853-FT2
R FRAME
(1600/2000/2500/3000 A)
R-FRAME CB
3E3388
RF-C1
1552264
P854-RF5 WH-18-UL
P853-RF4 WH-18-UL
X709-RF3 WH-18-UL
X710-RF2 WH-18-UL
X711-RF1 WH-18-UL
CB AUX CONTACTS
390-1204
AUX NC
AUX NO
AUX CM
ALM NC
ALM NO
ALM CM
X711-RF1 WH-18-UL
X710-RF2 WH-18-UL
X709-RF3 WH-18-UL
AC STD BLOCK
BTRY+
BTRY-
108-FF1 WH-18-UL
108-FF4 WH-18-UL
208-FF3 WH-18-UL
P853-FT2 WH-18-UL
P853-RF4 WH-18-UL
SHTR
3522951
"SHUNT TRIP RLY"
108-FF4 WH-18-UL
108-FF1 WH-18-UL
R958-FF2 WH-18-UL
208-FF3 WH-18-UL
P854-FT1 WH-18-UL
P854-RF5 WH-18-UL
NOTE D
SHTR_1
3522951
"SHUNT TRIP RLY"
RELAY USED FOR CB3 WIRING
AND CONNECTIONS ARE SIMILAR
AS T-FRAME CB1
GCCP 1.2 BLOCK
634-2495
RLY 6
RLY 5
R958-FF2 WH-18-UL
SEE SHEET 5
FOR NOTES SEE SHEET 1
DC/CIRCUIT BREAKERS OPTIONAL - WIRING
1E5167A INT-PROP
1E2722F DRAWING
1E0198W BRAND MARKINGS
1E0013Y CONFIDENTIALITY
1E0012A INTERPRETATION
1E0011 INTPR & TOL
Caterpillar: Confidential Yellow
PROD. OTHER RECORDS
UNLESS OTHERWISE SPECIFIED
DIMENSIONS ARE IN mm
DIMENSIONS A/D TOL ARE BASIC
VERSION TYPE PRIMARY X SECONDARY
THIRD ANGLE PROJECTION
SHEET 8 OF 13
ENG GENERAL W973
CATERPILLAR
DIAGRAM-WIRING
(GCCP1.2)
6339881 DASH 00 SHEET E

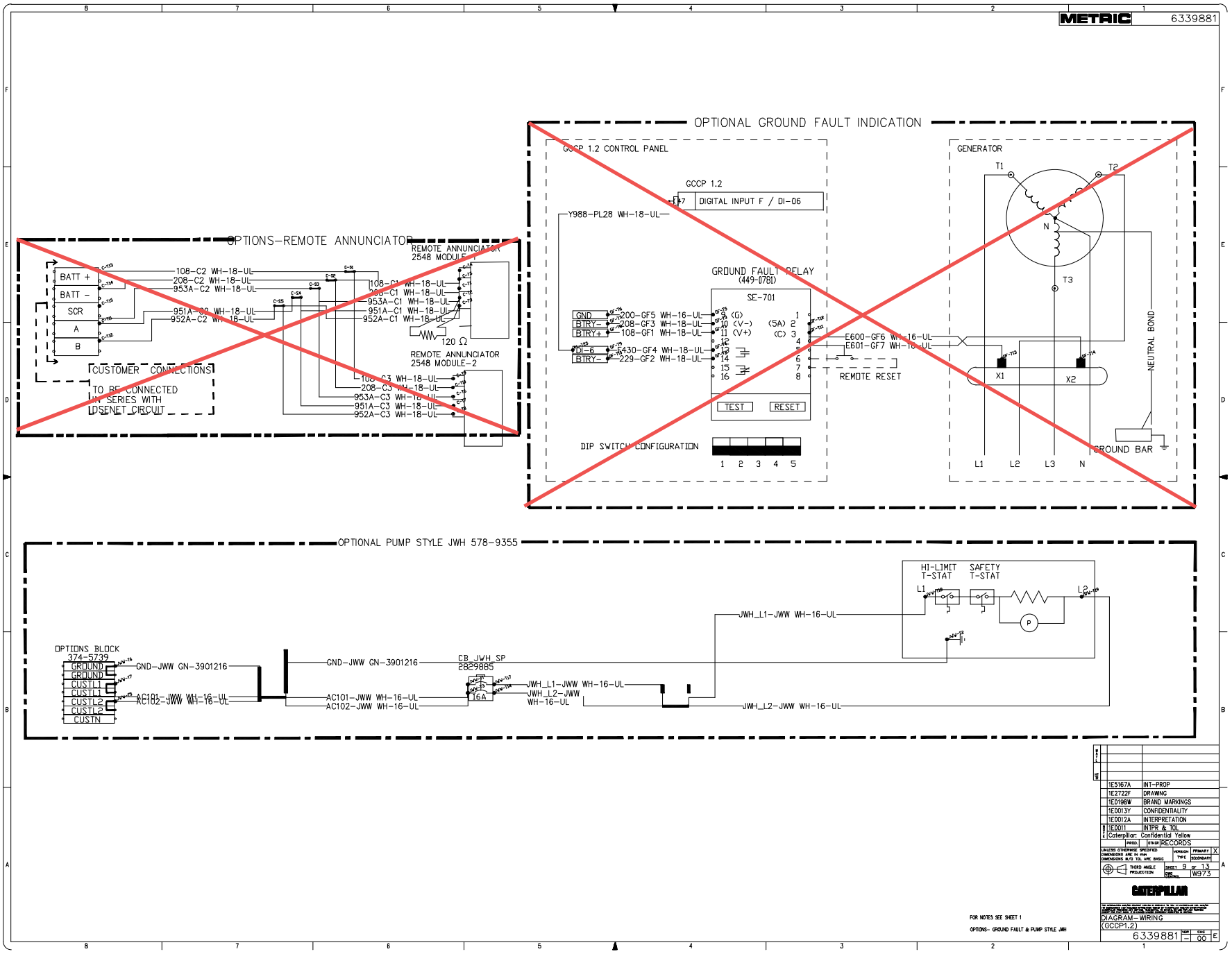
METRIC
6339881
OPTIONS–REMOTE ANNUNCIATOR
BATT +
BATT –
SCR
A
B
CUSTOMER CONNECTIONS
TO BE CONNECTED IN SERIES WITH LDSENET CIRCUIT
108–C2 WH–18–UL
208–C2 WH–18–UL
953A–C2 WH–18–UL
951A–C2 WH–18–UL
952A–C2 WH–18–UL
REMOTE ANNUNCIATOR 2548 MODULE
120 Ω
REMOTE ANNUNCIATOR 2548 MODULE–2
108–C3 WH–18–UL
208–C3 WH–18–UL
953A–C3 WH–18–UL
951A–C3 WH–18–UL
952A–C3 WH–18–UL
OPTIONAL GROUND FAULT INDICATION
GCCP 1.2 CONTROL PANEL
GCCP 1.2
DIGITAL INPUT F / DI–06
Y988–PL28 WH–18–UL
GROUND FAULT RELAY (449–0781)
SE–701
GND
BTRY–
BTRY+
200–GF5 WH–16–UL
208–GF3 WH–18–UL
108–GF1 WH–18–UL
DI–6
5430–GF4 WH–18–UL
229–GF2 WH–18–UL
(G)
(V–)
(V+)
(5A)
(C)
E600–GF6 WH–16–UL
E601–GF7 WH–16–UL
REMOTE RESET
TEST
RESET
DIP SWITCH CONFIGURATION
1 2 3 4 5
GENERATOR
T1
T2
T3
N
X1
X2
NEUTRAL BOND
GROUND BAR
L1
L2
L3
N
OPTIONAL PUMP STYLE JWH 578–9355
OPTIONS BLOCK 374–5739
GROUND
GROUND
CUSTL1
CUSTL1
CUSTL2
CUSTL2
CUSTN
GND–JWW GN–3901216
AC101–JWW WH–16–UL
AC102–JWW WH–16–UL
CB_JWH_SP 2829885
16A
JWH_L1–JWW WH–16–UL
JWH_L2–JWW WH–16–UL
HI–LIMIT T–STAT
SAFETY T–STAT
L1
L2
P
FOR NOTES SEE SHEET 1
OPTIONS– GROUND FAULT & PUMP STYLE JWH
1E5167A INT–PROP
1E2722F DRAWING
1E0198W BRAND MARKINGS
1E0013Y CONFIDENTIALITY
1E0012A INTERPRETATION
1E0011 INTPR & TOL
Caterpillar: Confidential Yellow
RECORDS
PRIMARY
SECONDARY
THIRD ANGLE PROJECTION
SHEET 9 OF 13
W973
CATERPILLAR
DIAGRAM–WIRING (GCCP1.2)
6339881
00

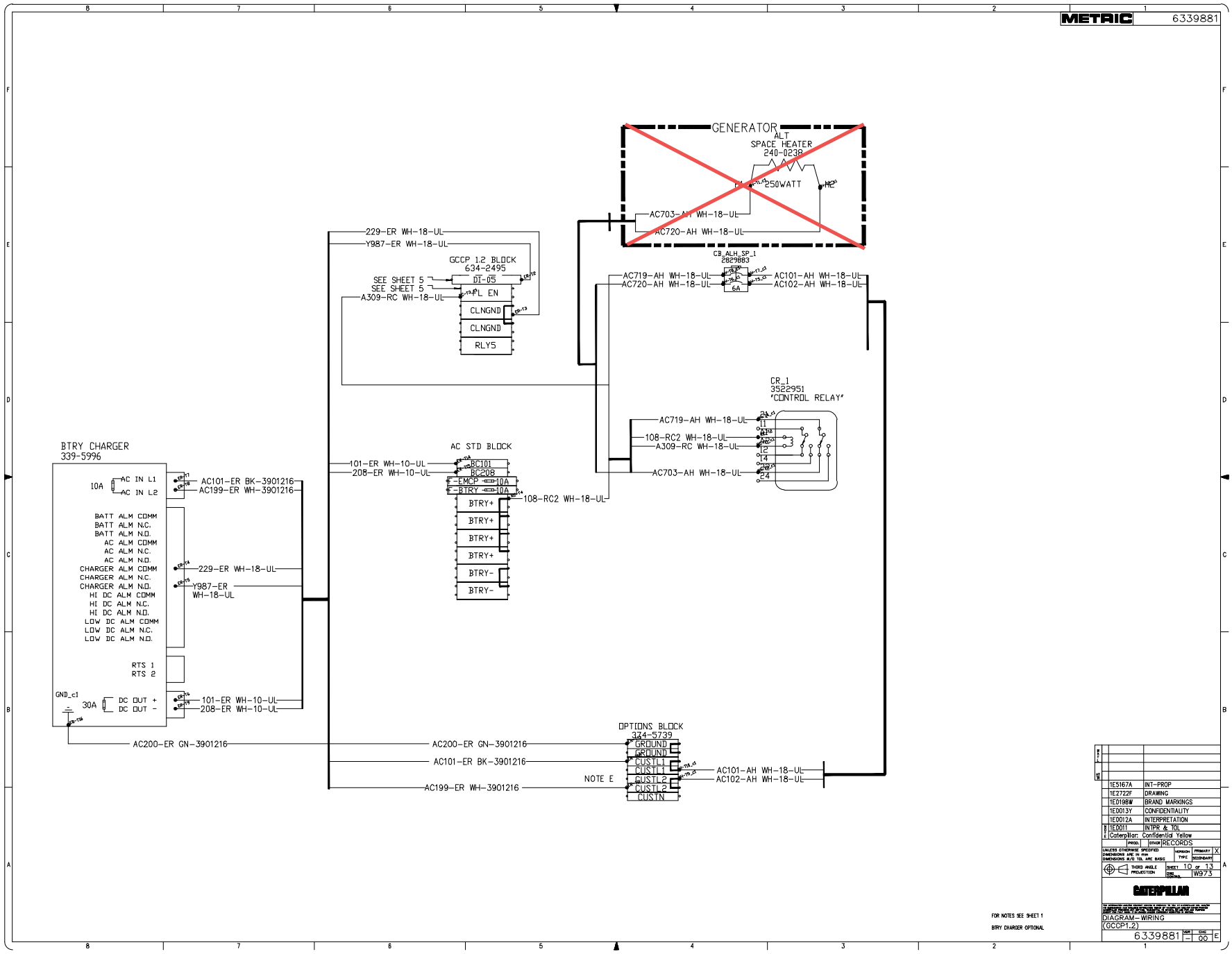
METRIC
6339881
GENERATOR
ALT
SPACE HEATER
240-0238
250WATT
AC703-AH WH-18-UL
AC720-AH WH-18-UL
229-ER WH-18-UL
Y987-ER WH-18-UL
GCCP 1.2 BLOCK
634-2495
SEE SHEET 5
SEE SHEET 5
A309-RC WH-18-UL
DT-05
FL EN
CLNGND
CLNGND
RLY5
CB_ALH_SP_1
2829883
6A
AC719-AH WH-18-UL
AC720-AH WH-18-UL
AC101-AH WH-18-UL
AC102-AH WH-18-UL
CR_1
3522951
"CONTROL RELAY"
AC719-AH WH-18-UL
108-RC2 WH-18-UL
A309-RC WH-18-UL
AC703-AH WH-18-UL
BTRY CHARGER
339-5996
10A
AC IN L1
AC IN L2
BATT ALM COMM
BATT ALM N.C.
BATT ALM N.O.
AC ALM COMM
AC ALM N.C.
AC ALM N.O.
CHARGER ALM COMM
CHARGER ALM N.C.
CHARGER ALM N.O.
HI DC ALM COMM
HI DC ALM N.C.
HI DC ALM N.O.
LOW DC ALM COMM
LOW DC ALM N.C.
LOW DC ALM N.O.
RTS 1
RTS 2
GND_c1
30A
DC OUT +
DC OUT -
AC101-ER BK-3901216
AC199-ER WH-3901216
229-ER WH-18-UL
Y987-ER WH-18-UL
101-ER WH-10-UL
208-ER WH-10-UL
AC200-ER GN-3901216
AC STD BLOCK
101-ER WH-10-UL
208-ER WH-10-UL
BC101
BC208
EMCP 10A
BTRY 10A
108-RC2 WH-18-UL
BTRY+
BTRY+
BTRY+
BTRY+
BTRY-
BTRY-
OPTIONS BLOCK
374-5739
GROUND
GROUND
CUSTL1
CUSTL1
CUSTL2
CUSTL2
CUSTN
AC200-ER GN-3901216
AC101-ER BK-3901216
AC199-ER WH-3901216
NOTE E
AC101-AH WH-18-UL
AC102-AH WH-18-UL
FOR NOTES SEE SHEET 1
BTRY CHARGER OPTIONAL
1E5167A INT-PROP
1E2722F DRAWING
1E0198W BRAND MARKINGS
1E0013Y CONFIDENTIALITY
1E0012A INTERPRETATION
1E0011 INTPR & TOL
Caterpillar: Confidential Yellow
PROD. OTHER RECORDS
UNLESS OTHERWISE SPECIFIED
DIMENSIONS ARE IN mm
DIMENSIONS A/D TOL ARE BASIC
VERSION TYPE PRIMARY X SECONDARY
THIRD ANGLE PROJECTION
SHEET 10 OF 13
ENG CONTROL W973
CATERPILLAR
DIAGRAM-WIRING
(GCCP1.2)
6339881 DASH - SHEET 00 E

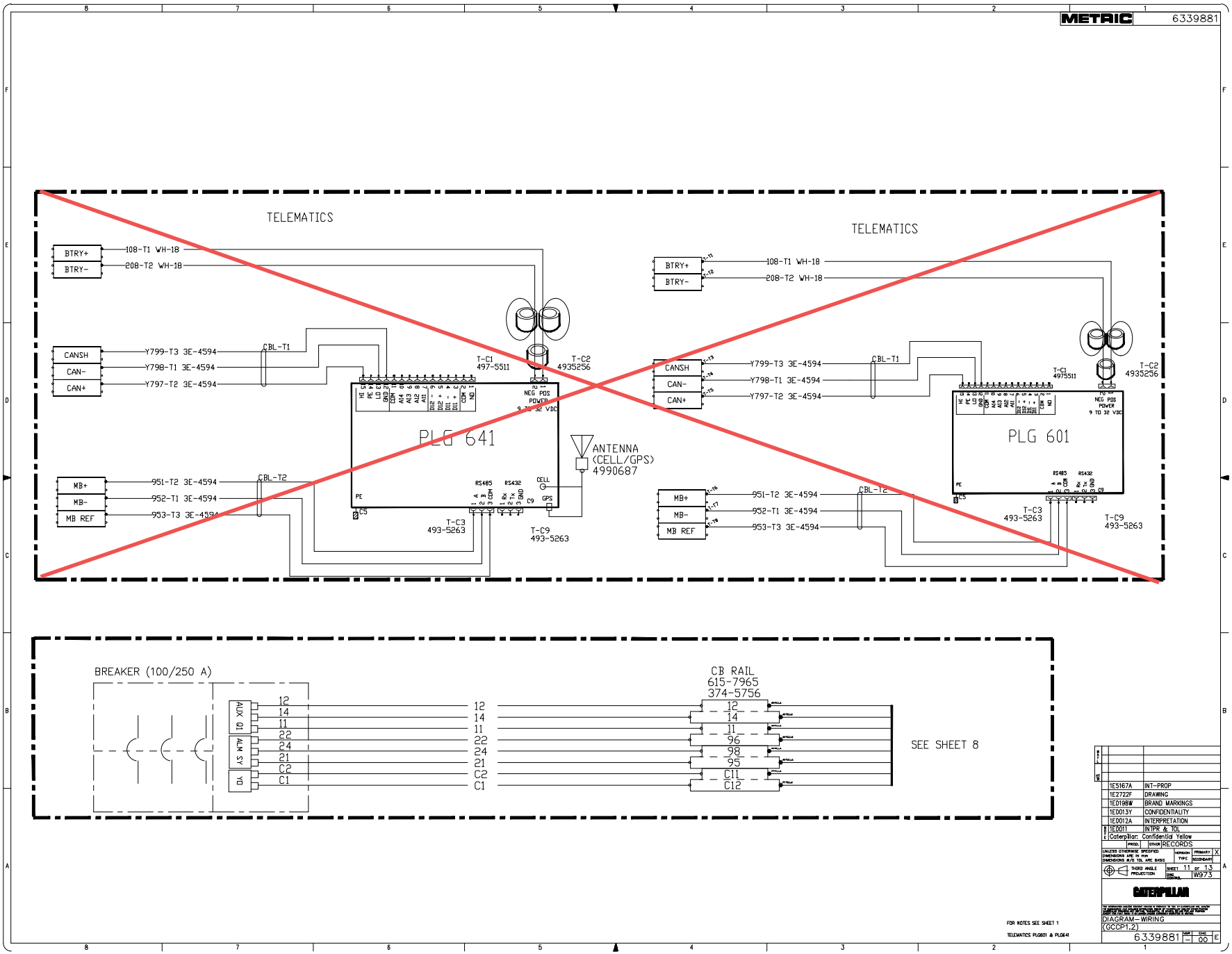
METRIC
6339881
TELEMATICS
BTRY+
BTRY-
108-T1 WH-18
208-T2 WH-18
CANSH
CAN-
CAN+
Y799-T3 3E-4594
Y798-T1 3E-4594
Y797-T2 3E-4594
CBL-T1
T-C1
497-5511
T-C2
4935256
PLG 641
NEG POS
POWER
9 TO 32 VDC
ANTENNA
(CELL/GPS)
4990687
MB+
MB-
MB REF
951-T2 3E-4594
952-T1 3E-4594
953-T3 3E-4594
CBL-T2
RS485
RS432
CELL
GPS
T-C3
493-5263
T-C9
493-5263
TELEMATICS
PLG 601
BREAKER (100/250 A)
AUX C1
ALM S7
C1
12
14
11
22
24
21
C2
C1
CB RAIL
615-7965
374-5756
96
98
95
C11
C12
SEE SHEET 8
1E5167A INT-PROP
1E2722F DRAWING
1ED198W BRAND MARKINGS
1ED013Y CONFIDENTIALITY
1ED012A INTERPRETATION
1E0011 INTPR & TOL
Caterpillar: Confidential Yellow
RECORDS
THIRD ANGLE PROJECTION
SHEET 11 OF 13
W973
CATERPILLAR
DIAGRAM-WIRING
(GCCP1.2)
6339881
00

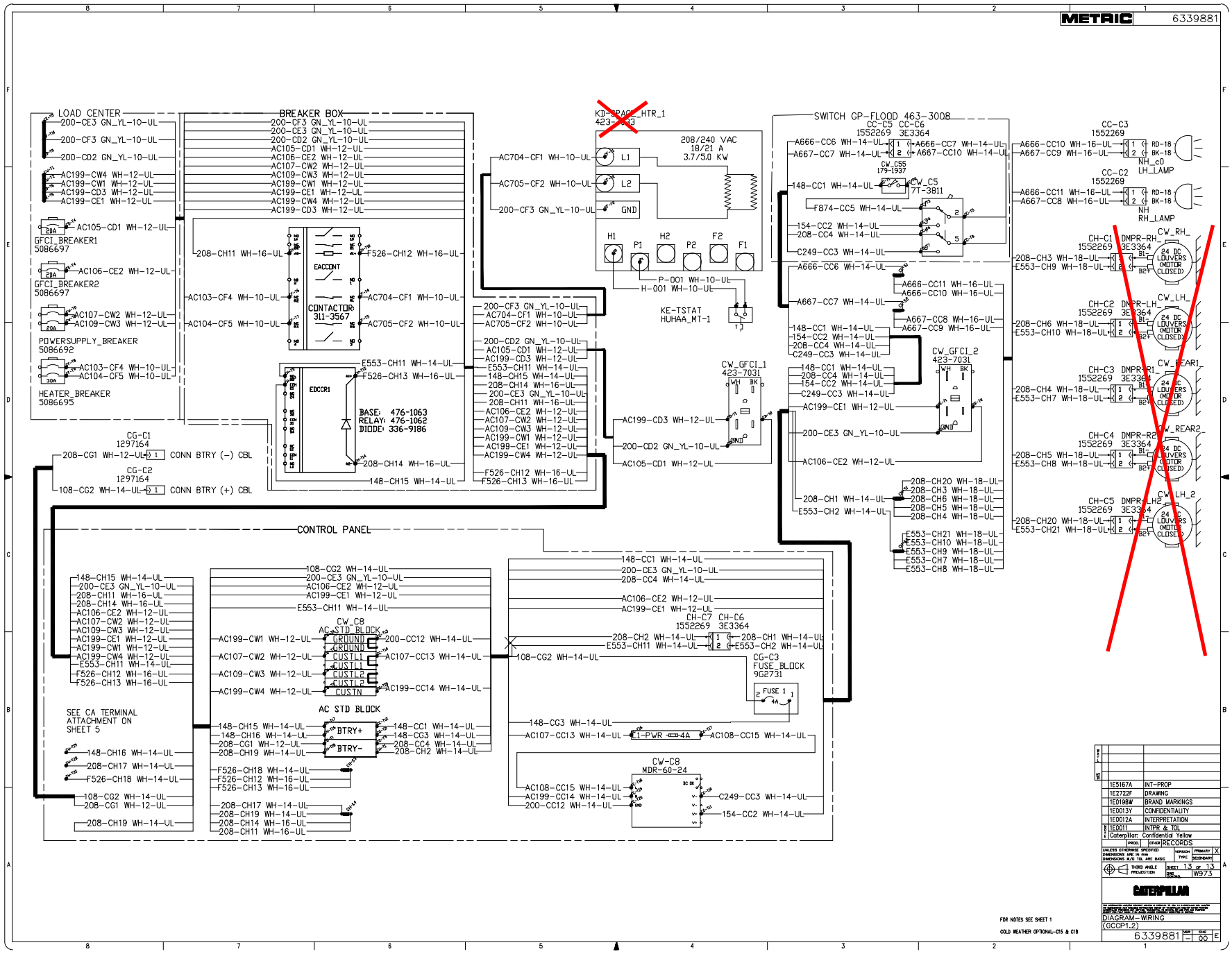
METRIC
6339881
LOAD CENTER
BREAKER BOX
GFCI_BREAKER1
5086697
GFCI_BREAKER2
5086697
POWERSUPPLY_BREAKER
5086692
HEATER_BREAKER
5086695
CONTACTOR
311-3567
EDCCR1
BASE: 476-1063
RELAY: 476-1062
DIODE: 336-9186
208/240 VAC
18/21 A
3.7/5.0 KW
KE-TSTAT
HUHAA_MT-1
SWITCH GP-FLOOD 463-3008
CW_GFCI_1
423-7031
CW_GFCI_2
423-7031
CG-C1
1297164
CONN BTRY (-) CBL
CG-C2
1297164
CONN BTRY (+) CBL
CONTROL PANEL
CW_C8
AC STD BLOCK
AC STD BLOCK
BTRY+
BTRY-
CG-C3
FUSE_BLOCK
9G2731
CW-C8
MDR-60-24
SEE CA TERMINAL
ATTACHMENT ON
SHEET 5
CC-C3
1552269
CC-C5 CC-C6
1552269 3E3364
CC-C2
1552269
CH-C1 DMPR-RH_
1552269 3E3364
CH-C2 DMPR-LH_
1552269 3E3364
CH-C3 DMPR-R1_
1552269 3E3364
CH-C4 DMPR-R2_
1552269 3E3364
CH-C5 DMPR-LH2
1552269 3E3364
CH-C7 CH-C6
1552269 3E3364
CW_C5
179-1937
CW_C5
7T-3811
NH_C0
LH_LAMP
NH
RH_LAMP
CW_RH_
CW_LH_
CW_REAR1
CW_REAR2
CW_LH_2
24 DC
LOUVERS
(MOTOR
CLOSED)
FOR NOTES SEE SHEET 1
COLD WEATHER OPTIONAL-C15 & C18
1E5167A INT-PROP
1E2722F DRAWING
1E0198W BRAND MARKINGS
1E0013Y CONFIDENTIALITY
1E0012A INTERPRETATION
1E0011 INTPR & TOL
Caterpillar: Confidential Yellow
RECORDS
PRIMARY
SECONDARY
SHEET 13 OF 13
W973
CATERPILLAR
DIAGRAM-WIRING
(GCCP1,2)
6339881
00

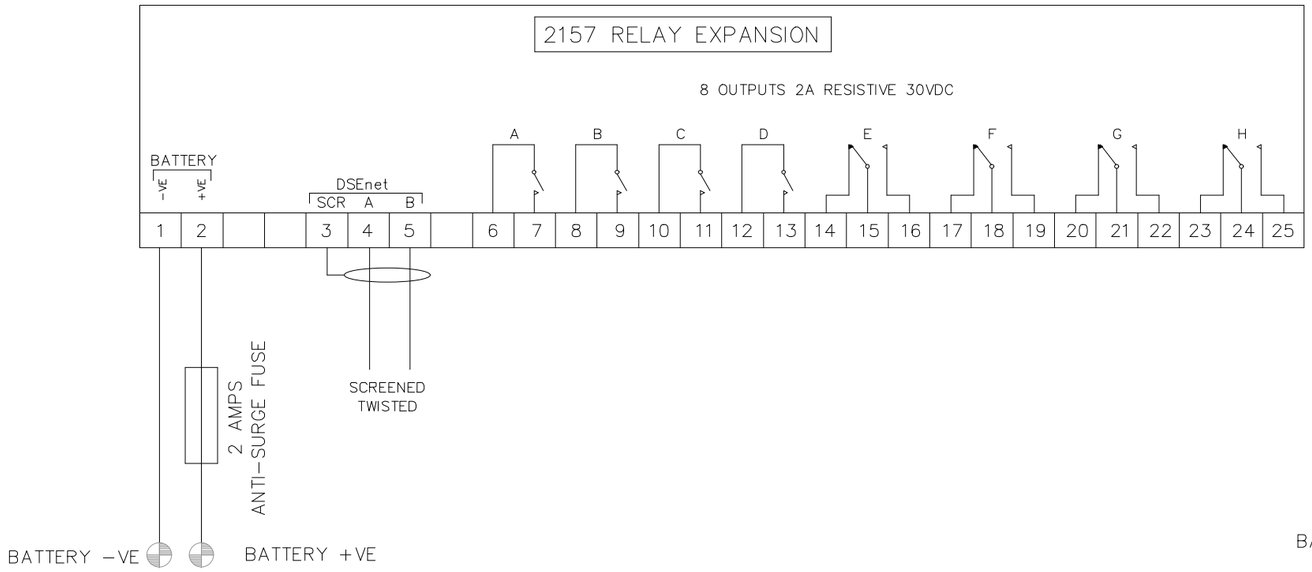

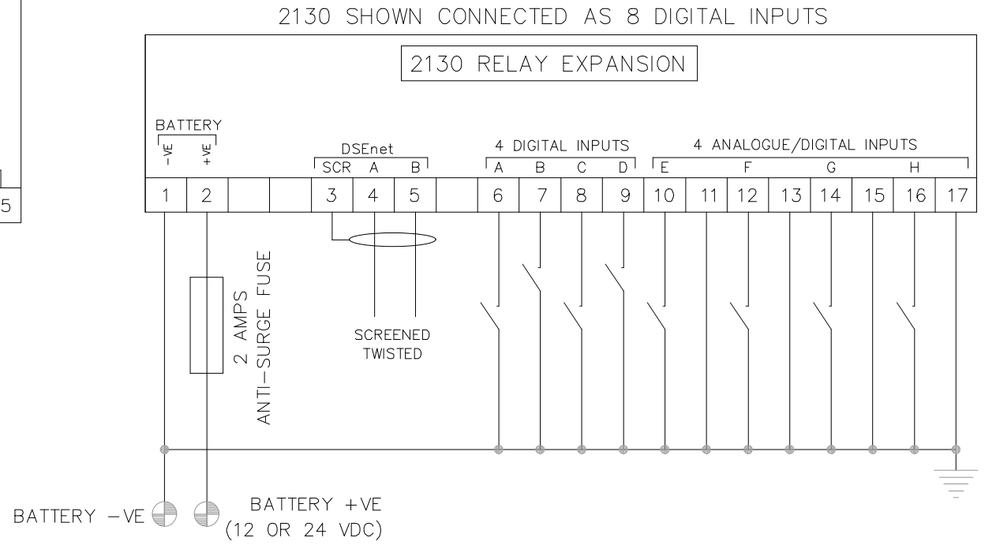

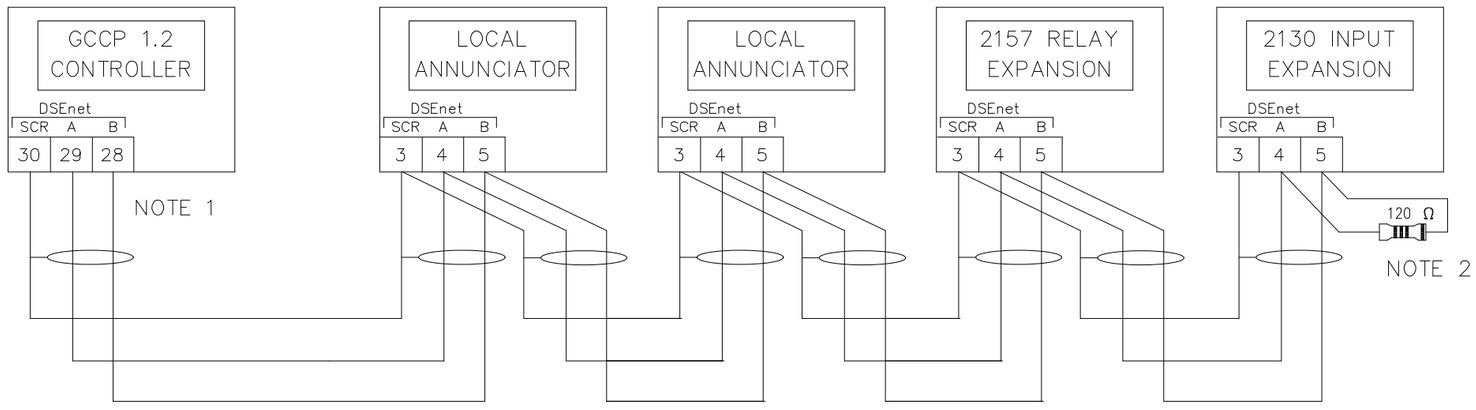

NOTE 1
AS A TERMINATING RESISTOR IS INTERNALLY FITTED TO THE HOST CONTROLLER, THE HOST CONTROLLER MUST BE THE FIRST UNIT ON THE DSEnet

NOTE 2
A 120 OHM TERMINATION RESISTOR MUST BE FITTED TO THE LAST UNIT ON THE DSEnet

DRAWN D. URIARTE	DATE 1/8/25	QUINN POWER SYSTEMS CAT	656 E. LA CADENA DR RIVERSIDE, CA 92507
CHECKED T. PINT	DATE 1/8/25		
APPROVED	DATE		
TITLE: OPTIONAL MODULES INPUT & OUTPUT MODULES	SCALE: NONE	JOB: CITY OF REDLANDS–TEXAS BS COUNTRY CLUB, FIFTH, & AGATE PS	DWG NO. E230557–2

GCCP 1.2 & 1.5

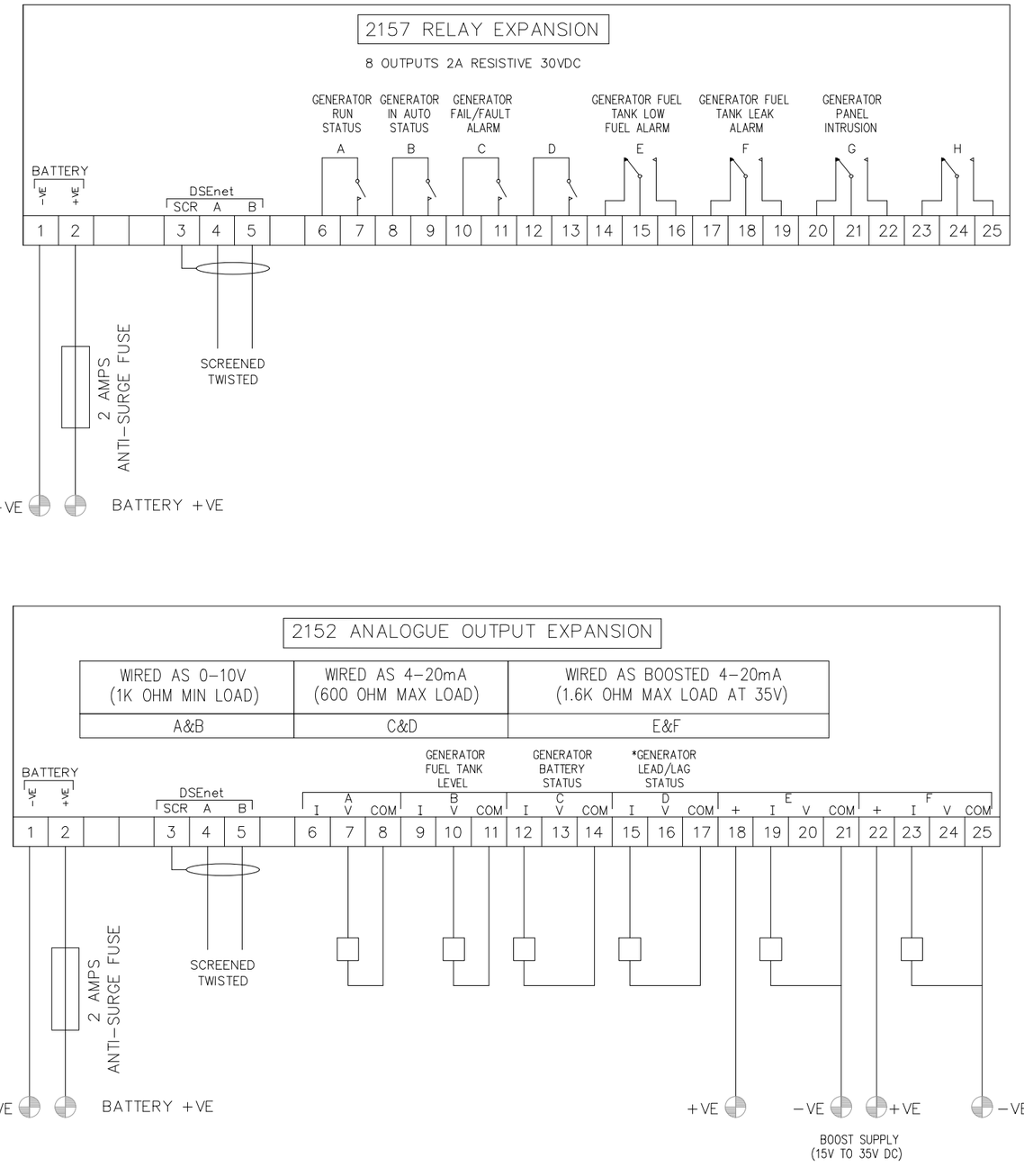

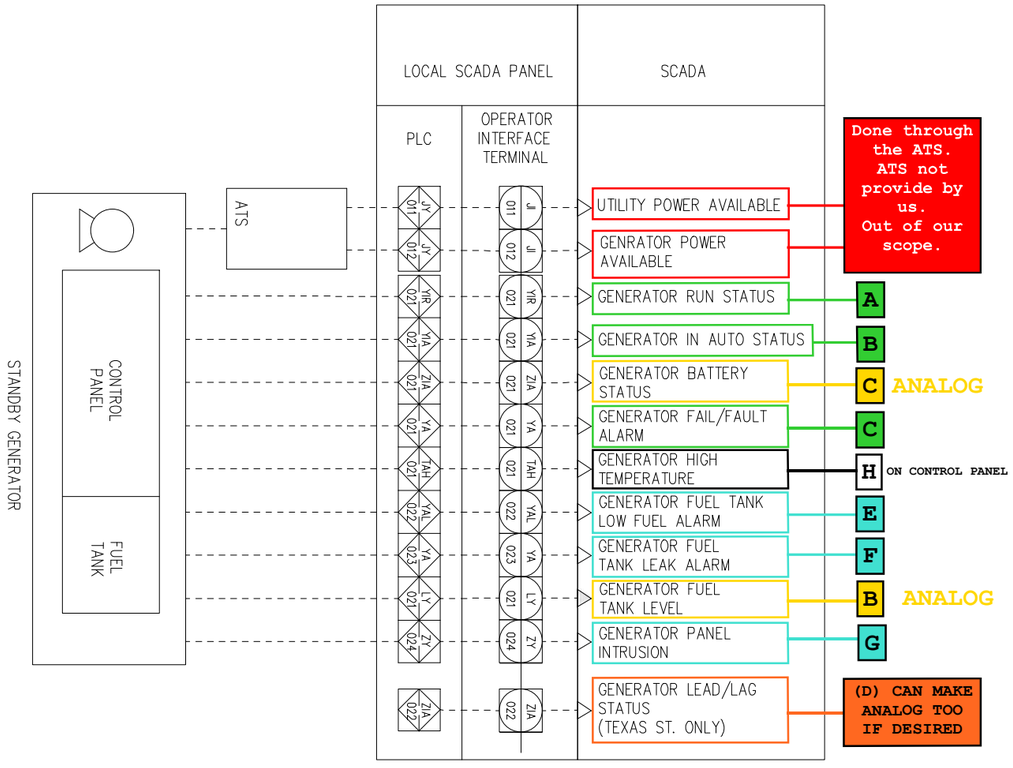

DRAWN D. URIARTE	DATE 5/9/2025	QUINN POWER SYSTEMS CAT	656 E. LA CADENA DR RIVERSIDE, CA 92507
CHECKED	DATE		
APPROVED	DATE		
TITLE: OPTIONAL MODULES INPUT & OUTPUT MODULES CONNECTION ILLUSTRATION	SCALE: NONE	JOB: CITY OF REDLANDS-TEXAS BS COUNTRY CLUB, FIFTH, & AGATE PS	
		DWG NO. N/A	

4.2 SCHEMATIC INTERCONNECTION DIAGRAM

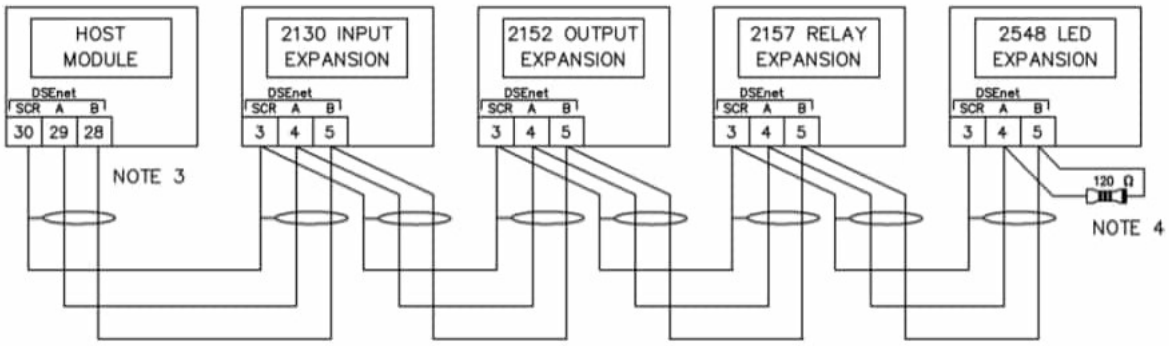

NOTE 3
AS A TERMINATING RESISTOR IS INTERNALLY FITTED TO THE HOST CONTROLLER, THE HOST CONTROLLER MUST BE THE FIRST UNIT ON THE DSEnet

NOTE 4
A 120 OHM TERMINATION RESISTOR MUST BE FITTED TO THE LAST UNIT ON THE DSEnet

4.3 TYPICAL WIRING DIAGRAM FOR ANALOG OUTPUT MODULE

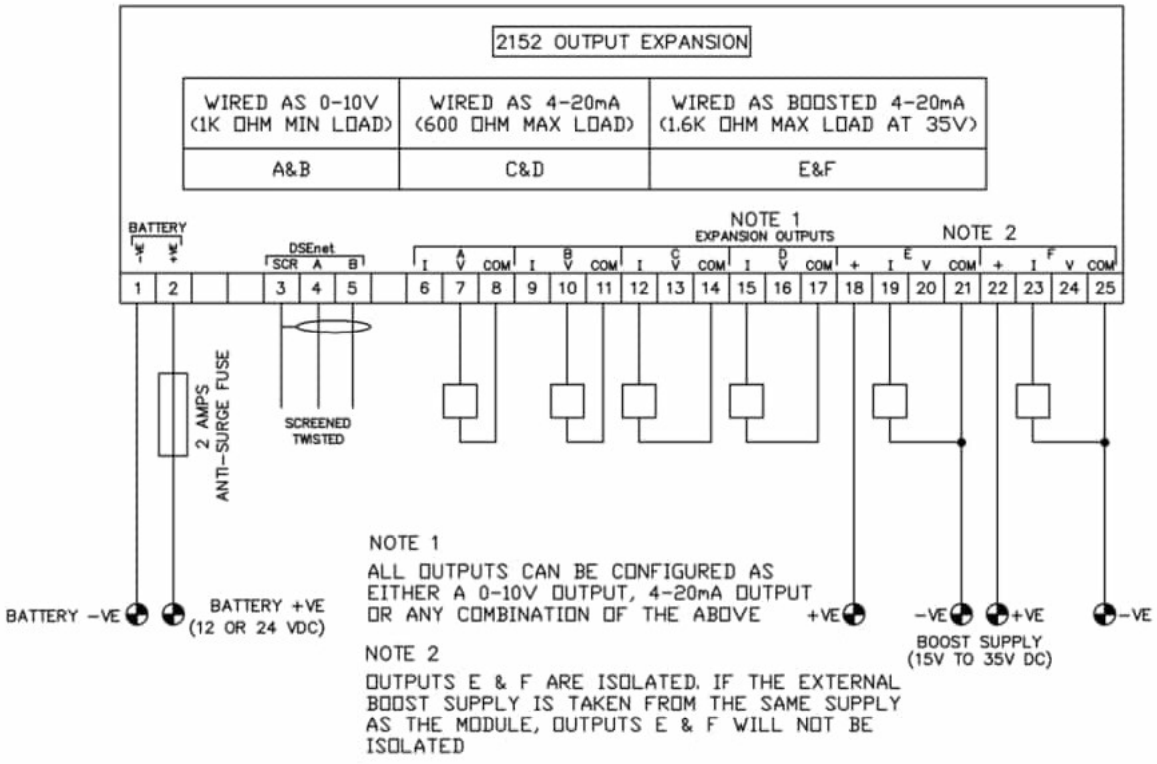

NOTE 1
ALL OUTPUTS CAN BE CONFIGURED AS EITHER A 0-10V OUTPUT, 4-20mA OUTPUT OR ANY COMBINATION OF THE ABOVE

NOTE 2
OUTPUTS E & F ARE ISOLATED. IF THE EXTERNAL BOOST SUPPLY IS TAKEN FROM THE SAME SUPPLY AS THE MODULE, OUTPUTS E & F WILL NOT BE ISOLATED

NOTE : Configuration of the inputs is performed in the host controller.

Extra Instructions discussed and shared for the Modules Wiring:

1. *Generator Engine Temperature High Alarm (TAH) should be a Discrete Output (DO) relay at the Generator Panel to be read as a Discrete Input (DI) signal at the PLC.*
   Setting it up as a DO for the input as a DI to their PLC is not a problem. (The output H shown in the image below is an output straight from the GCCP control panel.)



2. *Generator Battery Status should be an Analog Output (AO) to provide the Battery Voltage to be read as an Analog Input (AI) signal at the PLC.*
   We can do a AO out for battery voltage creating a custom curve with a range of their preference. (I will add it to the Analog Output wiring diagram as an AO out.)



3. *The Texas St. Lead/Lag status should be a DO relay at the Generator Panel to be read as a DI signal at the PLC.*
   The Lead/Lag status looks to be an issue as there is not a configurable DO for that. We can create an Analog output for it if desired. (Unfortunately, we are only able to do an Analog output for Lead/Lag status)

4. *Confirm that the expansion modules will be factory installed by CAT.*
   Installed by a Cat Dealer as Cat does not provide the Analog modules. (We will be sure to have all the modules installed and programmed/wired before delivering to the job site)

5. *Provide wiring diagram for the AO Expansion Module for the Analog Signals (similar to what was provided for the DO module).*
   See attached for expansion Module drawing with both the DO module and Analog expansion module on it. I also added a page from the analog operators manual for more details if needed. If you are good with this, I will add it to the Submittal as well.

David,
I thought that they were talking about Power Factor Lead/Lag. Now I see that they want to know which generator set is lead, first to start at next call to run and which one will wait to start as the lag unit. I've checked outputs on the 1.5 and do not see an output to communicate which unit will start next as the control panel will automatically balance hours between the two units to keep them with fairly equal operating hours. With the Load Demand Scheme we can "start all sets initially" or "start sets as load requires". The panels will keep the units hours in balance as they communicate over the MSC link. I recommend starting all units initially and then letting them shed a unit off depending on load.

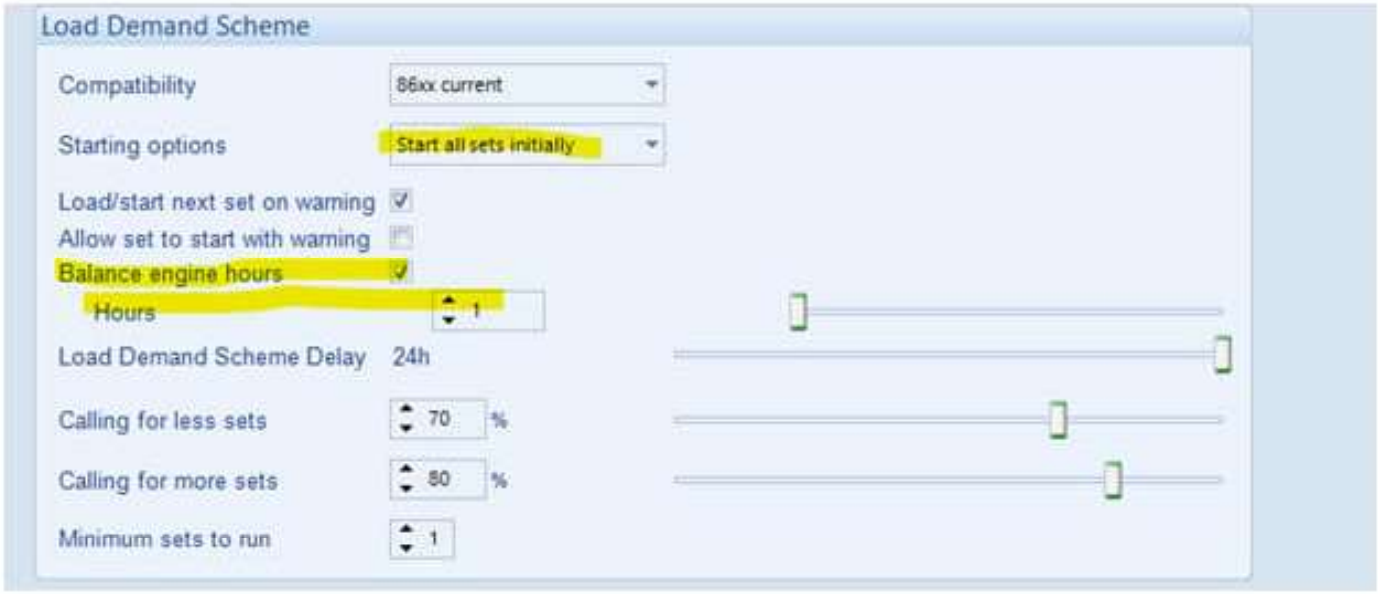

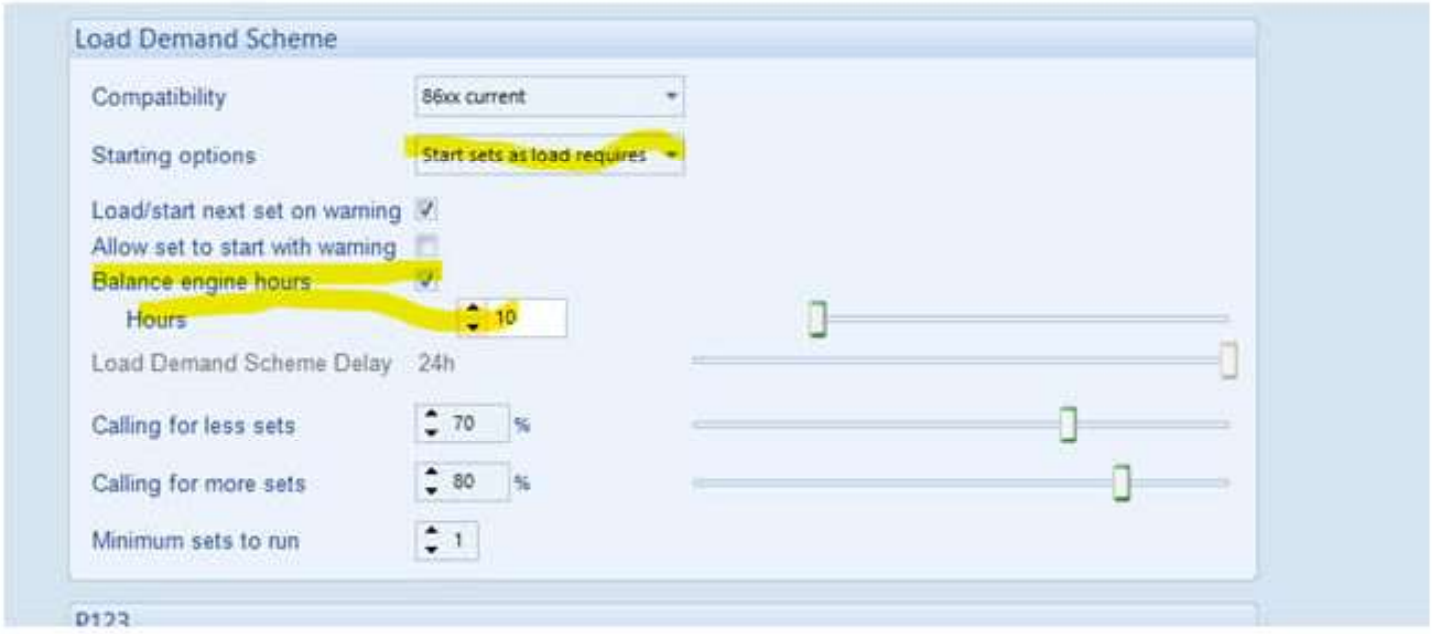

THIS PAGE INTENTIONALLY LEFT BLANK

BRADY
Water • Power • Transportation

SUBMITTAL REVIEW

Date: June 12, 2025

To: City of Redlands **Attention:** Paul Mariscal	**Project Owner:** City of Redlands **Project Name:** City of Redlands Water Facilities Generators
Date Received: June 12, 2025 **Reviewed By:** Ryan Nishimura	**Job No.:** PROJECT 501028 (BRADY)
Item of Equipment or Material: OFE Fifth Ave Generator	**Specification Section / Drawing:** Specification 16622 / Sheet FA-E-2

Submittal No.	Subject of Shop Drawing or Data	No Exceptions Taken	Make Corrections Noted	Submit Specified Items	Revise & Resubmit	Rejected	For Record Only
OFE Submittal-3	OFE Fifth Ave Generator	X					

Comments:

Submittal review is for Owner Furnished Equipment (OFE). Comments are for information only.

1. No exceptions.

Regards,

Ryan Nishimura, PE

Richard Brady & Associates

BRADY
Water • Power • Transportation

Corrections or comments made relative to submittals during this review do not relieve the contractor from compliance with the requirements of the drawings and specifications. This check is only for review of general conformance with the design concept of the project and general compliance with the information given in the contract documents. The contractor is responsible for confirming and correlating all quantities and dimensions; selecting fabrication processes and techniques of construction; coordinating its work with that of other trades, and performing its work in a safe and satisfactory manner.

656 East La Cadena Drive
Riverside CA 92507
Phone: (951) 683-5960 Fax: (951) 788-5112

GENERATOR SET SUBMITTAL FOR APPROVAL

Fifth Avenue PS

City Of Redlands
955 Parkford Dr,
Redlands, CA 92374

Project Number: 240171
Stock ID: RE16826

(1) CATERPILLAR MODEL C15 DIESEL GENERATOR SETS, STANDBY RATED, 500KW, 277/480V, 3 PHASE, 60HZ AT 1800 RPM, WITH 330 GALLON INTEGRAL TANK AND SOUND ATTENUATED ENCLOSURE

Project Engineer: David Uriarte
Email: david.uriarte@quinnpower.com
Phone: (951) 774-3244

Bill of Materials

Configuration:

(1) CATERPILLAR MODEL C15 DIESEL GENERATOR SETS, STANDBY RATED, 500KW, 277/480V, 3 PHASE, 60HZ AT 1800 RPM, WITH 330 GALLON INTEGRAL TANK AND SOUND ATTENUATED ENCLOSURE

CAT Standard Features and options

Engine Package Description:

Diesel Engine 15L, EPA TIER 3
Model C15, 6 Cylinder, 4-Cycle, TIER 2
CAT Electronic Governor (ADEM A4)

Starting / Charging System:

24V Electronic Starting Motor
Standard Wet Batteries with rack and cables

Control System:

GCCP 1.2 Auto Start Control Panel
Features Include:
- 4-line back-lit LCD text display
- Multiple display languages
- Five-key menu navigation
- LCD alarm indication
- Customizable power-up text and images
- Data logging facility
- Internal PLC editor
- Protections disable feature
- Fully configurable via PC using USB & RS485 communication
- Front panel configuration with PIN protection
- Power save mode
- 3-phase generator sensing and protection
- Generator current and power monitoring (kW, kvar, kVA, pf)
- kW and kvar overload and reverse power alarms
- Over current protection
- Unbalanced load protection
- Breaker control via fascia buttons
- Fuel and start outputs configurable when using CAN Support for 0 V to 10 V & 4 mA to 20 mA sensors
- 8 configurable digital inputs (3 available for Customer use)
- 8 configurable digital outputs (5 available for Customer use)
- 4 configurable analogue/digital inputs (3 available for Customer Use)
- CAN, MPU and alternator frequency speed sensing in one variant
- Real time clock
- Manual and automatic fuel pump control
- Engine pre-heat and post-heat functions
- Engine run-time scheduler
- Engine idle control for starting & stopping
- Fuel usage monitor and low fuel level alarms
- 3 configurable maintenance alarms

Safety Shutoff for:
- High Water Temp
- Overspeed
- Low Oil Pressure
- Low Coolant Level

Cooling System:

Coolant Drain Valve
Blower Fan and Fan Drive with Guards
Thermostats and Housing
Radiator, Package Mount
Jacket Water Pump
CAT Extended Life Coolant

Lube System:

Oil Filler and Dipstick
Oil Filter, Spin on
Lubricating Oil
Oil drain with valve
Shallow Oil Pan

Fuel System:

Primary Fuel Filter with Water Separator
Secondary Fuel Filter
Fuel Cooler
Fuel Priming Pump
Flexible Fuel Lines
Engine Fuel Transfer Pump

Generators:

Brushless, Self-Excited 2/3 Pitch, Random Wound
IP23 Protection
Class H Insulation and Temperature Rise
Terminal Box, Bottom Cable Entry
AVR350 Automatic Voltage Regulator
Neutral Bar

Finish:

All electroplated hardware or stainless steel
Anticorrosive paint protection
High gloss polyurethane paint for durability and scuff resistance

Manuals:

(1) Set Operations & Maintenance Manuals (Electronic Copy)

Tests:

Factory Standard Test @ 0.8 PF

Additional Optional Generator Set Equipment Included in Sale Quotation:

Enclosure and Options:

Sound Attenuated Level 1 Enclosure (White)
125A Load Center
GFCI Receptacle and Wiring
Enclosure Lights
Standard Air Cleaner

Fuel Tank:

UL142, Double Walled, 332 Gallon (Usable), Integral Fuel Tank
Fuel Level Switch
Fuel Level Gauge and Alarm
Fuel Tank Fill and Lock Cap

Circuit Breaker:

800A LS/I Manual, 100% Rated, UL Circuit Breaker
Auxiliary Contacts / Shunt Trip

Generator:	
	Alternator LC7034J
	105C Degree Temperature Rise over 40C Degree Ambient
	Permanent Magnet Generator
Control Panel (with Options):	
	Gen Running & Fault Relay
	Dust Proof Control Panel
	Panel Mounted Audible Alarm
	Local Annunciator
	Input Expansion Module
	Output Expansion Module
Cooling System:	
	Pump Style Jacket Water Heater
	Low Coolant Level Shutdown
Battery Charger:	
	Battery Charger, 10A, UL listed
Miscellaneous:	
	PL444 CAT 4G Telematics
	UL 2200 Listed Package Generator Set
	IBC Seismic Certification
	EPA Emissions Certification
	South Coast AQMD Pre-Certified
	(1) Set of Operation & Maintenance Manuals (Electronic Copy)
	Standard 5 Year Factory Warranty
Local Power Systems Services Included:	
	Delivery to Jobsite - ***Off loaded by others***
	Pre-Start up Assistance
	Level 1 Startup - Transfer Test and Generator Inspection
	One Year Customer Value Agreement
Quinn Power Systems Services NOT Included:	
	South Coast Air Quality Management Permits
	Sales tax
	Offloading/crane service of equipment off delivery truck
	Installation, wiring, piping, plumbing or anchoring of equipment
	Diesel fuel initial or for testing

SCOPE OF WORK

QPS to Supply the following Equipment as described in above Bill of Materials:

QPS will notify City of Redlands of the following:

- Estimated factory ready to ship date upon approval.
- When equipment received in our QPS yard and unit has been inspected.
- When Equipment is unit ready for jobsite delivery
- QPS will schedule carrier and delivery of above equipment to jobsite on single flatbed truck.

City of Redlands will be responsible for the following:

- Offload equipment from truck, via forklift or crane service and set in place.
- Mount, anchor, plumb and wire QPS supplied equipment on site.
- Terminate all electrical wires, exhaust piping and fuel piping from QPS supplied equipment
- Fill out and submit QPS Startup Checklist
- Provide 2 week notice for prospective startup date.

****Startup (if applicable) will not be conducted until the following items have been completed and received by QPS****

1. Startup Checklist
- Complete installation / anchoring
- Confirm wiring termination - including customer shore power for auxiliary equipment
- Confirm fuel is available for testing - must be done before technician's arrival
- Confirm building load available if necessary - NFPA 110
2. Permit to Operate, Authority to Construct, etc.

NOTES, EXCEPTION, CLARIFICATION

Quinn Power Systems is not a general, electrical or installing contractor. Providing equipment and services as described above only.

The equipment offered is CAT standard product provided for review. This quote is based on our understanding of your written specifications listed below:
Specification Section: 166622 Standby Diesel Electric Generators for Purchase by the City of Redlands (Owner), Single Line Diagram E 5.01

Quinn Power Systems is quoting a standard engineered product that complies with the functional intent of your verbal specification. Quinn Power Systems and Caterpillar will make every effort to meet the project delivery schedule requirements. However, do to the ongoing global supply chain disruptions, Quinn Power Systems will not be liable or accept any liquidated damage clause on a purchase order.

Depending on final height of installed generator set, a working platform may be required to access the control panel and maintenance doors. Platforms are not included in this proposal, unless stated above. Call for revised quotation if required.

Included in this quote is one (1), one day/ 8hrs (max) startup/ commissioning, (NFPA110). Additional technician trips to the jobsite due to insufficient site readiness will result in additional cost, at a billable rate of $1200 per day. A change order will be required prior to the scheduling of additional technician site visits.

Startup/Commissioning Services are provided for CAT factory/ QPS supplied equipment only. Scope of work for Startup Services available upon request. Out of Scope services are billed on a Time & Material basis in the field at purchaser's expense. QPS standard labor rates apply. Technician services are provided during normal business hours Monday through Friday.

Exception taken to any NETA 3rd party or independent testing requirements. Any and all testing as listed above to be provided by QPS technicians.

Cat® C15 DIESEL GENERATOR SETS

Standby & Prime: 60Hz



Image shown might not reflect actual configuration

Engine Model	Cat® C15 In-line 6, 4-cycle Diesel
Bore x Stroke	137 mm x 171 mm (5.4 in x 6.8 in)
Displacement	15.2 L (928 in³)
Compression Ratio	16.1:1
Aspiration	Turbocharged Air-to-Air Aftercooled
Fuel Injection System	MEUI
Governor	Electronic ADEM™ A4

Model	Standby	Prime	Emission Strategy
C15	500 ekW, 625 kVA	455 ekW, 569 kVA	TIER II Non-Road

PACKAGE PERFORMANCE

Performance	Standby	Prime
Frequency	60 Hz	
Genset Power Rating	625 kVA	569 kVA
Genset power rating with fan @ 0.8 power factor	500 ekW	455 ekW
Emissions	TIER II Non-Road	
Performance Number	DM8155	DM8154
Fuel Consumption		
100% load with fan, L/hr (gal/hr)	133.9 (35.3)	126.3 (33.3)
75% load with fan, L/hr (gal/hr)	108.0 (28.5)	97.2 (25.6)
50% load with fan, L/hr (gal/hr)	69.7 (18.4)	63.9 (16.8)
25% load with fan, L/hr (gal/hr)	40.9 (10.8)	38.2 (10.0)
Cooling System[1]		
Radiator air flow restriction (system), kPa (in. water)	0.12 (0.48)	0.12 (0.48)
Radiator air flow, m³/min (CFM)	720 (25426)	720 (25426)
Engine coolant capacity, L (gal)	20.8 (5.5)	20.8 (5.5)
Radiator coolant capacity, L (gal)	54 (14)	54 (14)
Total coolant capacity, L (gal)	75 (20)	75 (20)
Inlet Air		
Combustion air inlet flow rate, m³/min (CFM)	38.2 (1349)	38.2 (1349)
Max. Allowable Combustion Air Inlet Temp, °C (°F)	49 (120)	49 (120)
Exhaust System		
Exhaust stack gas temperature, °C (°F)	531 (988)	524 (975)
Exhaust gas flow rate, m³/min (CFM)	109.6 (3870)	101.2 (3573.4)
Exhaust system backpressure (maximum allowable), kPa (in. water)	10.0 (40.0)	10.0 (40.0)
Heat Rejection		
Heat rejection to jacket water, kW (BTU/min)	182 (10375)	172 (9781)
Heat rejection to exhaust (total), kW (BTU/min)	493 (28036)	483 (27467)
Heat rejection to aftercooler, kW (BTU/min)	121 (6881)	120 (6824)
Heat rejection to atmosphere from engine, kW (BTU/min)	91 (5175)	87 (4947)

Alternator[3]											
Duty Cycle		Standby					Prime				
Phase		3-Phase					3-Phase				
Voltages, V		208	220	240	480	600	208	220	240	480	600
Current, Amps		1735	1640	1504	752	601	1579	1493	1368	684	547
Frame: LC6124F Excitation: AREP	Temperature Rise @ 40°C	150	130	130	130	130	125	105	105	105	105
	Motor Starting Capability @ 30% Voltage Dip, skVA	1325	1466	1712	1712	1714	1325	1466	1712	1712	1714
Frame: LC6124G Excitation: AREP	Temperature Rise @ 40°C	130	130	105	105	105	105	105	105	105	105
	Motor Starting Capability @ 30% Voltage Dip, skVA	1335	1479	1729	1729	1731	1335	1479	1729	1729	1731
Frame: LC7024H Excitation: AREP	Temperature Rise @ 40°C					130					105
	Motor Starting Capability @ 30% Voltage Dip, skVA					2023					2023
Frame: LC7034J Excitation: PMG	Temperature Rise @ 40°C	105	105	105	105		80	80	80	80	
	Motor Starting Capability @ 30% Voltage Dip, skVA	1524	1694	1993	1993		1524	1694	1993	1993	
Frame: LC7024F Excitation: AREP	Temperature Rise @ 40°C	130	105	105			105	105	80		
	Motor Starting Capability @ 30% Voltage Dip, skVA	1248	1387	1633			1248	1387	1633		
Frame: LC6114F Excitation: SE	Temperature Rise @ 40°C	150	130	130	130		125	105	105	105	
	Motor Starting Capability @ 30% Voltage Dip, skVA	1104	1222	1428	1428		1104	1222	1428	1428	
Frame: LC6114G Excitation: SE	Temperature Rise @ 40°C	130	130	105	105		105	105	105	105	
	Motor Starting Capability @ 30% Voltage Dip, skVA	1116	1236	1445	1445		1116	1236	1445	1445	

WEIGHTS & DIMENSIONS

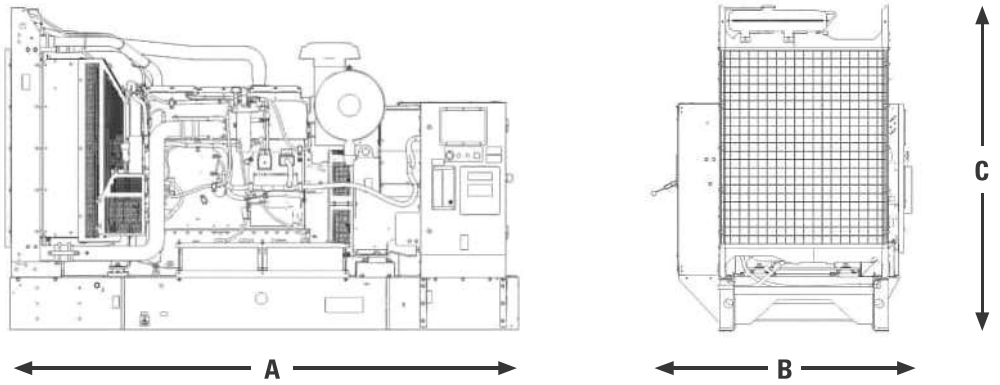

Dim "A" mm (in)	Dim "B" mm	Reference Mechanical Drawings	m "C" mm (in)	Dry Weight kg (lb)
3476 (137)	1628 (64)		2128 (84)	4365 (9623)

Note: General configuration not to be used for installation. See general dimension drawings for detail.

APPLICABLE CODES AND STANDARDS:

CSA C22.2 No 100-04, UL142, UL489, UL869, cUL/UL2200, NFPA 37, NFPA 70, NFPA 99,NFPA 110, IBC, IEC60034-1, ISO 3046, ISO 8528, NEMA MG 1-33.

Note: Codes may not be available in all model configurations. Please consult your local Cat Dealer representative for availability.

STANDBY: Output available with varying load for the duration of the interruption of the normal source power. Average power output is 70% of the standby power rating. Typical operation is 200 hours per year, with maximum expected usage of 500 hours per year.

PRIME: Output available with varying load for an unlimited time. Average power output is 70% of the prime power rating. Typical peak demand is 100% of prime rated ekW with 10% overload capability for emergency use for a maximum of 1 hour in 12. Overload operation cannot exceed 25 hours per year.

RATINGS: Ratings are based on SAE J1349 standard conditions. These ratings also apply at ISO3046 standard conditions.

DEFINITIONS AND CONDITIONS

[1] For ambient and altitude capabilities consult your Cat dealer. Air flow restriction (system) is added to existing restriction from factory.

[3] UL 2200 Listed packages may have oversized generators with a different temperature rise and motor starting characteristics. Generator temperature rise is based on a 40° C ambient per NEMA MG1-32.

LET'S DO THE WORK.™

www.cat.com/electricpower
© 2024 Caterpillar. All Rights Reserved.
Materials and specifications are subject to change without notice. The International System of Units (SI) is used in this publication.
CAT, CATERPILLAR, LET'S DO THE WORK, their respective logos, "Caterpillar Corporate Yellow", the "Power Edge" and Cat "Modern Hex" trade dress as well as corporate and product identity used herein, are trademarks of Caterpillar and may not be used without permission.

Enclosures



Picture shown may not reflect actual configuration

C13/C15/C18
SOUND ATTENUATED ENCLOSURES

US Sourced
Diesel Generator Set
350 - 750 ekW 60 Hz

Features

Robust/Highly Corrosion Resistant Construction

- Factory installed on skid base
- Environmentally friendly, polyester powder baked paint
- 14 gauge steel
- Interior zinc plated fasteners
- Exterior stainless steel fasteners
- Internally mounted exhaust silencing system
- Designed and tested to comply with UL 2200 Listed generator set package
- Compression door latches providing solid door seal

Excellent Access

- Large cable entry area for installation ease
- Accommodates side mounted single or multiple breakers
- Three doors on both sides
- Vertically hinged allow 180° opening rotation and retention with door stays
- Lube oil and coolant drains piped to the exterior of the enclosure base
- Radiator fill cover

Security and Safety

- Lockable access doors which give full access to control panel and breaker
- Cooling fan and battery charging alternator fully guarded
- Fuel fill, oil fill and battery can only be reached via lockable access
- Externally mounted emergency stop button
- Designed for spreader bar lifting to ensure safety
- Stub-up area is rodent proof

Transportability

These enclosures are of extremely rugged construction to withstand outdoor exposure and rough handling common on many construction sites.

Options

- Enclosure constructed with 14 gauge steel
- Enclosure constructed with 12 gauge aluminum (5052 grade)
- Caterpillar yellow and white paint
- Control panel viewing window#
- UL Listed integral fuel tank with 670, 400, and 300 gallon capacities
- UL Listed sub base fuel tank with 660, 1000, 1800, and 2200 gallon capacities.
- Seismic certification per applicable building codes: IBC 2000, IBC 2003, IBC 2006, IBC 2009, IBC 2012, IBC 2015 CBC 2007, CBC 2010
- IBC Certification for 150 mph wind loading
- AC/DC lighting package
- 5 kW Canopy space heater to facilitate compliance with NFPA 110
- Motorized louvers and gravity discharge damper
- 125A Load Center
- GFCI outlets

Not available with aluminum enclosures.

Level 1 Sound Attenuated Enclosure (Steel) Sound Levels

Model	Standby eKW	Cooling Air Flow Rate		Ambient Capability*		Sound Pressure Levels (dBA) at 7m (23 ft)
		m³/s	cfm	°C	°F	100% Load
C13	350	8.5	18010	57	135	74
	400	8.5	18010	56	133	75
C15	350	10.4	22072	59	138	73
	400	10.4	22072	51	124	73
	450	10.4	22072	46	115	74
	500	12.5	26415	48	118	75
C18	550	8.1	17234	45	113	75
	600	8.1	17234	43	109	75
	650	12.7	26909	51	123	75
	700	12.7	26909	48	118	75
	750	12.7	26909	48	118	75

Sound Attenuated Enclosure (Aluminum) Sound Levels

Model	Standby eKW	Cooling Air Flow Rate		Ambient Capability*		Sound Pressure Levels (dBA) at 7m (23 ft)
		m³/s	cfm	°C	°F	100% Load
C13	350	8.5	-	57	135	75
	400	8.5	-	56	133	75
C15	350	10.4	22072	59	138	72
	400	10.4	22072	51	124	73
	450	10.4	22072	46	115	74
	500	12.5	26415	48	118	75
C18	550	8.1	17234	45	113	76
	600	8.1	17234	43	109	76
	650	12.7	26909	51	123	76
	700	12.7	26909	48	118	76
	750	12.7	26909	48	118	76



C13 / C15 / C18 Integral and Sub-Base Fuel Tanks

US Sourced
Diesel Generator Set
350 – 750 ekW 60 Hz

Picture shown may not represent actual package.

Features

- UL Listed for United States (UL 142) and Canada (CAN/ULC S601)
- Facilitates compliance with NFPA 30 code, NFPA 37 and 110 standards and CSA C282 code
- Dual wall
- Lockable fuel fill cap, 4” (101.6 mm) NPT
- Low fuel level warning standard, customer configurable warning or shutdown
- Primary tank leak detection switch in containment basin
- Tank design provides capacity for thermal expansion of fuel
- Fuel supply dip tube is positioned so as not to pick up fuel sediment
- Fuel return and supply dip tube is separated by an internal baffle to prevent immediate re-supply of heated return fuel
- Pressure washed with an iron phosphate solution
- Interior tank surfaces coated with a solvent-based thin-film rust preventative
- Heavy gauge steel gussets with internal lifting rings
- Primary and secondary tanks are leak tested at 20.7 kPa (3 psi) minimum
- Compatible with open packages and enclosures
- Gloss black polyester alkyd enamel exterior paint
- Welded steel containment basin (minimum of 110% of primary tank capacity)
- Direct reading fuel gauge with variable electrical output
- Emergency vents on primary and secondary tanks are sized in accordance with NFPA 30

Sub-Base

- The Sub-Base fuel tank mounts below the generator set wide base

Integral

- Integral diesel fuel tank is incorporated into the generator set base frame
- Robust base design includes linear vibration isolators between tank base and engine generator

Options

- Audio/visual fuel level alarm panel
- 5 gal (18.9 L) spill containment
- 5 gal (18.9 L) spill containment with fuel fill drop tube with in 6” (152 mm) from bottom of tank
- 5 gal (18.9 L) spill containment with overfill prevention valve and fuel fill drop tube with in 6” (152 mm) from bottom of tank
- ULC Listed 7.5 gal (28.4 L) spill containment with vent extensions, vent whistle, and drop tube facilitating compliance with CSA B139-09
- ULC Listed 7.5 gal (28.4 L) spill containment with overfill prevention valve, vent extensions, vent whistle and drop tube facilitating compliance with CSA B139-09

Integral & Sub-Base Fuel Tank Base Useable Capacities with Fuel Tank Dimensions & Weights

Integral - Width(W) 2014 mm (79.3 in)
Sub-base - Width(W) 2056 mm (81 in)
Integral* - Width(W) 2315 mm (91.2 in)
Sub-base*-Width(W) 2357 mm (92.7in)

Reference Mechanical Drawings

Sound Attenuated Enclosure

C13 Tank Design	Feature Code	Total Capacity		Useable Capacity		Tank Only						Overall Package Height with Tank			
						Dry Weight		Height 'H'		Length 'L'		Open		Enclosure	
		Liter	Gallon	Liter	Gallon	kg	lb	mm	in	mm	in	mm	in	mm	in
Integral	FTDW013	2646	699	2540	671	1569	3450	762	30.0	5461	215.0	NA	NA	2743	108.0
Sub-Base	FTDW005 / FTDW016	3941	1041	3876	1024	1659	3657	635	25.0	5550	218.5	NA	NA	2955	116.3
Sub-Base	FTDW006	6980	1844	6818	1801	2033	4483	889	35.0	6184	243.5	NA	NA	3209	126.3
Sub-Base	FTDW007	8339	2203	8244	2178	2292	5052	889	35.0	7074	278.5	NA	NA	3209	126.3
Sub-Base	FTDW011	2476	654	2435	643	1468	3236	635	25.0	3810	150.0	NA	NA	2955	116.3

C15 Tank Design	Feature Code	Total Capacity		Useable Capacity		Tank Only						Overall Package Height with Tank			
						Dry Weight		Height 'H'		Length 'L'		Open		Enclosure	
		Liter	Gallon	Liter	Gallon	kg	lb	mm	in	mm	in	mm	in	mm	in
Integral	FTDW001	1283	339	1262	333	1015	2237	639	25.0	4746	186.9	NA	NA	2619	103.0
Sub-Base	FTDW005 / FTDW016	3941	1041	3876	1024	1659	3657	635	25.0	5550	218.5	NA	NA	2955	116.3
Sub-Base	FTDW006	6980	1844	6818	1801	2228	4912	889	35.0	6184	243.5	NA	NA	3209	126.3
Sub-Base	FTDW011	2476	654	2435	643	1468	3236	635	25.0	3810	150.0	NA	NA	2955	116.3
Sub-Base	FTDW034	10887	2876	9899	2615	2847	6277	914	36	7747	305	NA	NA	3233	127.3

C18 Tank Design	Feature Code	Total Capacity		Useable Capacity		Tank Only						Overall Package Height with Tank			
						Dry Weight		Height 'H'		Length 'L'		Open		Enclosure	
		Liter	Gallon	Liter	Gallon	kg	lb	mm	in	mm	in	mm	in	mm	in
Integral	FTDW003	1446	382	1422	376	1015	2237	635	25.0	3814	150.1	NA	NA	2560	100.8
Integral*	FTDW030	2498	660	2381	629	1681	3703	762	30.0	4995	196.6	2670	105	2675	105.3
Integral*	FTDW031	5175	1367	4997	1320	2046	4510	762	30.0	6737	265.3	NA	NA	2675	105.3
Sub-Base	FTDW005 / FTDW016	3941	1041	3876	1024	1659	3657	635	25.0	5550	218.5	NA	NA	2905	114.3
Sub-Base	FTDW007	8339	2203	8244	2178	2150	4134	889	35.0	7074	278.5	NA	NA	3209	126.3
Sub-Base	FTDW011	2476	654	2435	643	1468	3236	635	25.0	3810	150.0	NA	NA	2905	114.3
Sub-Base*	FTDW032	10228	2702	9994	2640	2638	5816	889	35.0	7368	290	NA	NA	3132	123.3

*For Ratings 650, 700 &750 ekW only

Tanks with full electrical stub-up area include removable end channel. Tanks with RH stub-up include stub- up area directly below the circuit breaker or power terminal strips. Dimensions include weather-protective enclosure exhaust system.

Dual wall sub-base tanks are UL Listed and constructed in accordance with UL Standard for Safety UL 142, Steel Aboveground Tanks for Flammable and Combustible Liquids and Canada CAN/ULC S601, Standard for Shop Fabricated Steel Aboveground Horizontal Tanks for Flammable and Combustible Liquids.

Fuel tanks and applicable options facilitate compliance with the following United States NFPA Code and Standards:

NFPA 30: Flammable and Combustible Liquids Code
NFPA 37: Standard for the Installation and Use of Stationary Combustion Engines and Gas Turbines
NFPA 110: Standard for Emergency and Standby Power Systems

Fuel tanks and applicable options facilitate compliance with the following Canadian Standard and Code:
CSA C282 – Emergency Electrical Power Supply for Buildings
CSA B139-09 - Installation Code for Oil-Burning Equipment

The following sub-base fuel tanks meet Chicago code for containment and labelling:

FTDW005
FTDW008
FTDW011

©2021 Caterpillar
All rights reserved.
Materials and specifications are subject to change without notice.
The International System of Units (SI) is used in this publication.
CAT, CATERPILLAR, LET'S DO THE WORK, their respective logos, "Caterpillar Corporate Yellow" the "Power Edge" and Cat "Modern Hex" trade dress as well as corporate and product identity used herein, are trademarks of Caterpillar and may not be used without permission.

FUEL LEVEL ALARMS - FSS



CRITICAL LOW FUEL LEVEL SHUTDOWN AND LOW FUEL LEVEL ALARM

These options provide an alarm on low fuel level and a shutdown on critical low fuel level. This warning is reported by an indicator light on the control panel with an audible alarm also available as an option. This warning can additionally be relayed to a remote annunciator.

Note: Standard Fuel Fill, UL Rated Emergency-vent, Standard vent, Fuel Sender & Leak Detection Probe are included as standard on generator sets fitted with UL Listed fuel tanks.

CRITICAL HIGH FUEL LEVEL ALARM

This option provides an alarm on critical high fuel level. This warning is reported by an indicator light on the control panel with an audible alarm also available as an option. This warning can additionally be relayed to a remote annunciator.

Information contained in this publication may be considered confidential. Discretion is recommended when distributing.
Materials and specifications are subject to change without notice.

CAT, CATERPILLAR, LET'S DO THE WORK, their respective logos, "Caterpillar Corporate Yellow," the "Power Edge" and Cat "Modern Hex" trade dress as well as corporate and product identity used herein, are trademarks of Caterpillar and may not be used without permission.



Image shown may not reflect actual configuration

Fuel Level Gauge and Sender

The unit consists of a magnetically driven dial for direct reading with a snap fi t Hall Effect Module attached to the lens. This module sends an electrical signal to a remote fuel level monitor.

The module can provide ratiometric voltage output proportional to the liquid volume inside the tank.

Features

- A magnetic drive allows a signal from the float mechanism inside the tank to be transmitted through a solid bulkhead.
- The dial is designed to allow a second magnetic coupling. This is a coupling from the pointer magnet, through the sealed lens and into the Hall Effect Module.
- The magnetic connection of the Hall Effect sensor is more reliable than systems that depend on the sliding contact of variable resistor devices.
- Hall Effect is a solid state technology with no moving contacts. It counts on the fact that a magnet bends the path of electrons moving through a semiconductor. The bending of the electrons can be detected and converted into an electrical signal.
- The dial is able to provide an electrical output which can be utilized for remote monitoring of tank levels.
- The dial case is hermetically sealed by ultrasonic welding to melt and fuse the case into one solid piece. This keeps weather out, ensuring “no-fog” read ability while greatly extending mechanical life.
- The seal is a high reliability, no-gasket design.
- The plastic case is far more resistant to corrosion than any metal-cased version and is capable of withstanding broad variations in temperature. The lens and case are a special, UV stabilized plastic material.

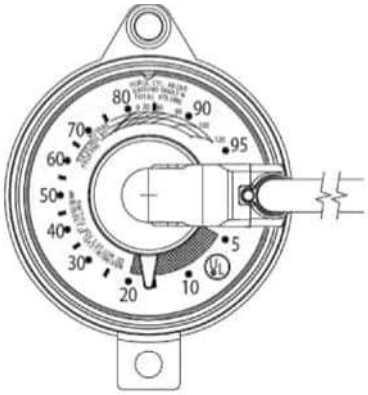

Remote-ready Dial, with Hall Effect Module

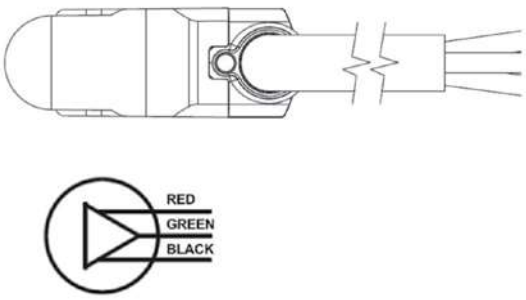

Hall Effect Module

Engine Controller



ADEM™ A4 Engine Controller

The ADEM™ A4 is the main Electronic Control Module (ECM) used on select diesel engines. The ADEM A4 provides a higher degree of control over a large number of combustion variables. The ADEM A4 is designed to control/interface Electronic Unit Injector (EUI) equipped engines. The ADEM A4 engine system is composed of the ADEM A4 ECM, control software, sensors, actuators, fuel injectors, and interface to the generator system. The prime benefit of an ADEM A4 engine system is to better control and maintain the particulate emissions, both steady state and transient, while improving engine performance.

Features

Reliable, Durable

All ADEM A4 controllers are designed to survive the harshest environments.

- Environmentally sealed, die-cast aluminum housing solates and protects electronic components from moisture and dirt contamination
- Rigorous vibration testing ensures product reliability and durability
- Accuracy maintained from –40°C to 85°C
- Electrical noise immunity to 100 volts / meter
- Internal circuits are designed to withstand shorts to + battery and – battery

Simple Servicing

Each ADEM A4 system works in combination with the Cat® ET service tool software to keep the engine operating at peak performance.

- Displays measured parameters
- Retrieves active and logged event code documenting abnormal system operation
- Performs calibrations and diagnostic tests
- Supports flash programming of new software into the ADEM A4 ECM

Self Diagnostics

Each ADEM A4 ECM has a full compliment of diagnostics. The ECM can detect faults in the electrical system and report those faults to the service technician for quick repair.

- Self-diagnostic capability pinpoints operational prob-lems in need of attention.

Advanced Features

- Enhanced performance from fuel injection timing and limiting
- Adjustable monitoring of vital engine parameters
- Programmable speed acceleration ramp rate
- Data link interfaces

Engine Controller

Description

The ECM is housed in an environmentally sealed cast-ing. All wiring connections to the ECM are made using two sealed connectors: a single seventy-pin connector and a single one hundred twenty-pin connector.

Engine Speed Governing

Desired engine speed is calculated by the ECM and held within ±0.2 Hz for isochronous and droop mode. The ECM accounts for droop that is requested. The proper amount of fuel is sent to the injectors due to these calculations. The ECM also employs cooldown/shutdown strategies, acceleration delays on startup, acceleration ramp times and speed reference.

Fuel Limiting

Warm and cold fuel-air ratio control limits are con-trolled by the ECM. Electronic monitoring system derates, torque limit, and cranking limit, programmable torque scaling, and cold cylinder cutout mode are standard features.

Fuel Injection Timing

Master timing for injection is controlled by the ECM control. Temperature dependencies are accounted for in the fuel injection calculations.

Electronic Monitoring

Electronic monitoring of vital engine parameters can be programmed. Warning, derate, and shutdown event conditions may be customized by the user.

Information Management

The ECM stores information to assist with electronic troubleshooting. Active and logged diagnostic codes, active events, logged events, fuel consumption, engine hours, and instantaneous totals aid service technicians when diagnosing electronic faults and scheduling preventive maintenance.

Calibrations

Engine performance is optimized through injection timing. Auto/manual sensor calibrations are standard features.

On-Board System Tests

System tests are available to assist in electronic trou-bleshooting. These tests include: injector activation, injector cutout, and override of control outputs.

Data Link Interfaces

The ADEM A4 communicates with the EMCP via a dedicated communication network.

Electronic Sensing

The following sensing is available on the ADEM A4: oil pressure, fuel pressure, fuel temperature, atmospheric pressure, air inlet temperature, turbo outlet pressure, engine coolant temperature, engine speed, throttle, position, exhaust temperature, oil filter pressure differential, fuel filter pressure differential, air filter pressure differential and crankcase pressure.

Engine Controller

SPECIFICATIONS

Impervious to:

Salt spray, fuel, oil and oil additives, coolant, spray cleaners, chlorinated solvents, hydrogen sulfide and methane gas, and dust.

Input and output protection

All inputs and outputs are protected against short circuits to +battery and –battery

Input voltage range (24 VDC nominal)

18 to 32 VDC

Mounting

Engine mounted

Reverse polarity protected

Shock, withstands 20g

Temperature range

Operating: –40°C to 85°C (–40°F to 185°F)
Storage: –50°C to 120°C (–58°F to 248°F)

Vibration

Withstands 8.0g @ 24 to 2 kHz

Information contained in this publication may be considered confidential. Discretion is recommended when distributing. Materials and specifications are subject to change without notice.

CAT, CATERPILLAR, LET'S DO THE WORK, their respective logos, "Caterpillar Yellow," the "Power Edge" and Cat "Modern Hex" trade dress as well as corporate and product identity used herein, are trademarks of Caterpillar and may not be used without permission.

©2019 Caterpillar
All rights reserved.

ADAM-4572

1-port Modbus Gateway



RoHS COMPLIANT 2011/65/EU CE FCC

Features

- Supports 10/100 Mbps communication speeds
- Allows up to 8 clients to access field data simultaneously
- Supports popular HMI software with Modbus/TCP driver or OPC server
- Up to 3 Independent serial ports capacity if configured to RS-485 serial mode
- Provides auto-searching device ID Windows utility
- Surge protection for RS-485 and power line
- Automatic RS-485 data flow control
- Easy mounting on DIN-rail or panel
- Supports Modbus/ASCII, RTU Protocol to control devices

Specifications

Ethernet Communications

- **Compatibility** IEEE 802.3, IEEE 802.3u
- **Speed** 10/100 Mbps
- **Port Connector** 8-pin RJ45

Serial Communications

- **Port Type** RS-232/422/485
- **No. of Ports** 1
- **Port Connector** Plug-in terminal block
- **Data Bits** 7, 8
- **Stop Bits** 1, 2
- **Parity** None, Odd, Even, Mark, Space
- **Baud Rate** 50 bps ~ 921.6 kbps
- **Data Signals** RS-232: TxD, RxD, GND
  RS-422: TxD+, TxD-, RxD+, RxD-, GND
  RS-485: Data+, Data-, GND
- **• Protection** 15 KV ESD protection for all signals

Software

- **OS Support** 32-bit/64-bit Windows XP/Vista/7/8, Windows Server 2003/2008/2008 R2/2012, Windows CE 5.0, and Linux
- **Utility Software** Advantech EKI Device Configuration Utility
- **Operation Mode** Modbus/RTU master/slave mode, Modbus/ASCII master/slave mode

Mechanics

- **Dimensions (H x W x D)** 70 x 130 x 30 mm
- **Enclosure** ABS+PC with solid mounting hardware
- **Mounting** DIN-rail, stack, wall

General

- **Certifications** CE, FCC Part 15 Subpart B (Class A)
- **LED Indicators** System: Power, System Status
  LAN: Speed, Link/Active
  Serial: Tx, Rx

Power Requirement

- **Power Input** 10 ~ 30 V_{DC}
- **Power Consumption** 2.5W

Environment

- **Operating Temperature** -10 ~ 60°C (14 ~ 140°F)
- **Storing Temperature** -20 ~ 80° C (-4 ~ 176° F)
- **Operating Humidity** 5 ~ 95% RH

Ordering Information

- **ADAM-4572** 1-port Modbus Gateway

Dimensions

Unit: [mm]

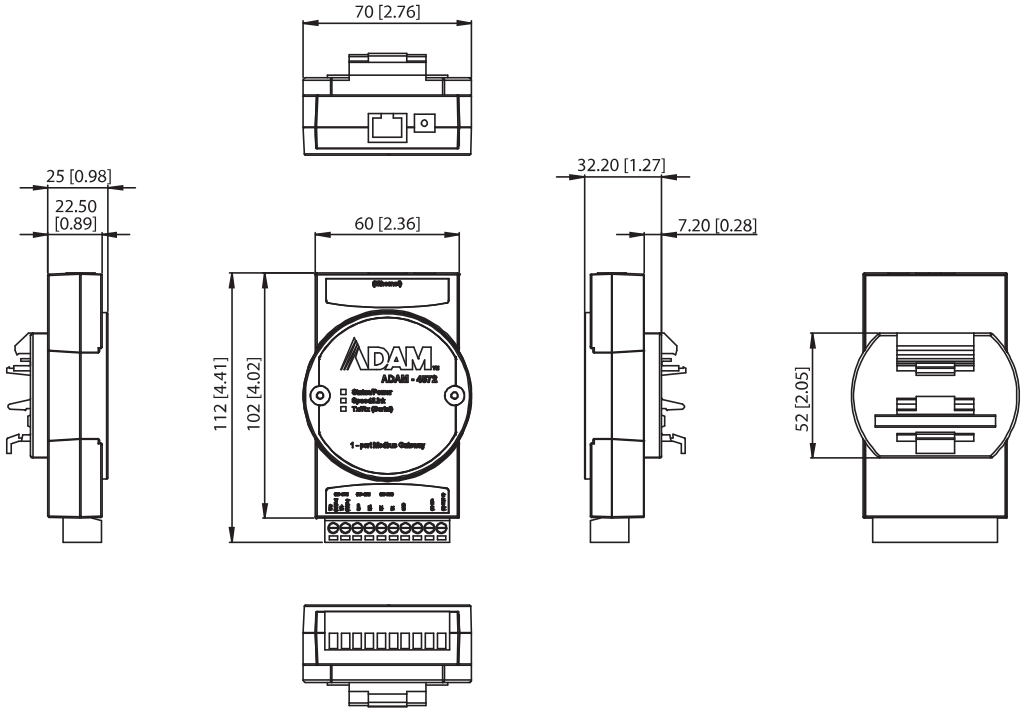

Panel Cut-out Dimensions: 70 x 102 x 25 mm (2.76" x 4.02" x 0.98)

Automatic Voltage Regulator

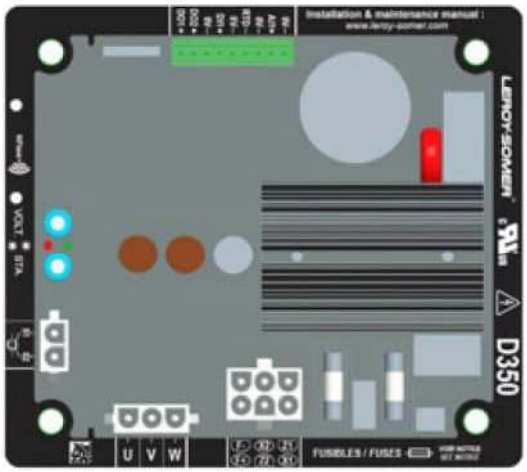

D350AVR

The D350, Digital Voltage Regulator is used to regulate alternators with a field current of less than 5 A in continuous operations, and 10 A maximum in the event of short-circuit for 10 seconds maximum.

Its design is in accordance with mounting in a generator terminal box or a control cabinet. It is required, at a minimum, to follow the local protection and safety standards, especially those specific to electrical installations for voltages of 300 VAC phase-to-neutral maximum.

NFLink™ configuration module

The D350 is equipped with NFC technology for communication and configuration purposes. The configuration module is placed over the two dedicated positioning holes on the plastic enclosure as shown below. Once the configuration is done, the NF Link must be removed as it is not supposed to be left on the D350 when it is in continuous operation.

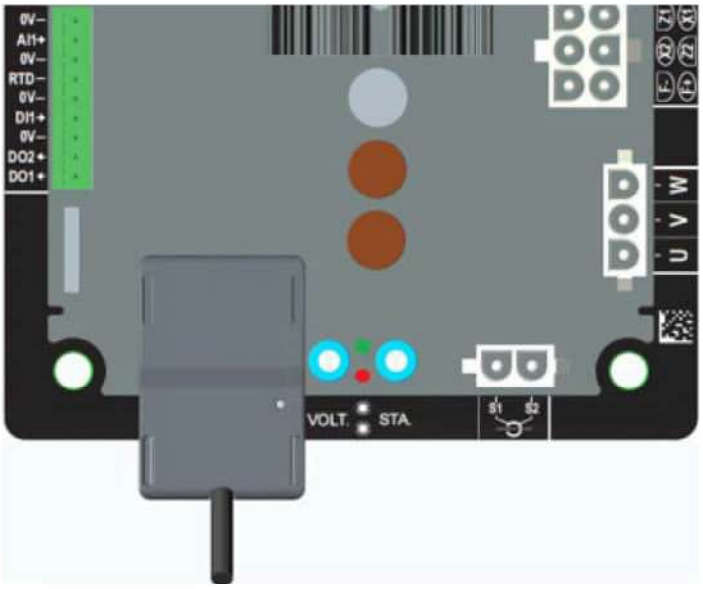

Technical Characteristics

D350 regulator can be used to perform the following functions:

Voltage regulation

- With or without reactive droop compensation (Reactive droop to allow parallel operation)
- With or without line droop compensation

Regulation of the field current, or manual mode, which allows direct control of the field current.

The D350 can also be used to:

- Adjust the reference for the regulation mode in progress, using an analogue input (0 – 10V and potentiometer)
- Monitoring of temperature sensor (Pt100 or CTP)
- Limit the minimum field current delivered to the exciter field
- Monitoring of the maximum stator current limit
- Loss of voltage sensing
- Withstand a sudden short-circuit for 10 seconds maximum in AREP, PMG
- Signals monitoring (events logger)
- 2 digital outputs for various trip, regulation mode and measurement data

Alternator voltage sensing:

- 3 phases without neutral, 2 phases or 1 phase with neutral
- Three-phase range 0 – 530 VAC
- Consumption < 2 VA

Stator current measurement with CT:

- Range 0 –1A or 0 – 5A
- Consumption < 2 VA

Power supply:

- 4 terminals for PMG, AREP, SHUNT
- Range 50 – 277 VAC
- Consumption max < 3000 VA

Field excitation:

- Rated 0 – 5A
- Short-circuit 10A max

Frequency:

- Range 10-100 Hz
- Regulation accuracy: +/-0.25% of the average of the three phases on a linear load, with harmonic distortion less than 5%
- Voltage adjustment range: 0 to 150% of the rated voltage
- Quadrature droop adjustment range: -20% to 20%
- Under frequency protection: integrated, adjustable threshold, slope adjustable from 0.5 to 3V/Hz in steps of 0.1 V/Hz
- Excitation ceiling: adjustable by configuration at 3 points
- Environment: ambient temperature from -40°C to +65°C, relative humidity of less than 95% non-condensing, mounted in a cabinet or in a terminal box

Easy Reg Advanced:

- All the D350 settings are entered/configured using the "EasyReg Advanced" software
- This program is only compatible with computers running WINDOWS® versions Windows 7 and Windows 10 operating systems

Dimensions:

- Height: 52.9 mm
- Width: 125 mm
- Length: 140 mm

Mounting:

- Holes spacing on the Length: 115 mm
- Holes spacing on the width: 100 mm

Weight:

- 0.45 kg

Conformity to standards:

- EMC: IEC 61000-6-2, IEC 61000-6-4
- Humidity: IEC 60068-1 and test in accordance with IEC 60068-2-14
- Dry heat: IEC 60068-2-2
- Damp heat: IEC 60028-2-30
- Cold: IEC 600068-2-1

D350 AVR and NFLink™ Dimensions



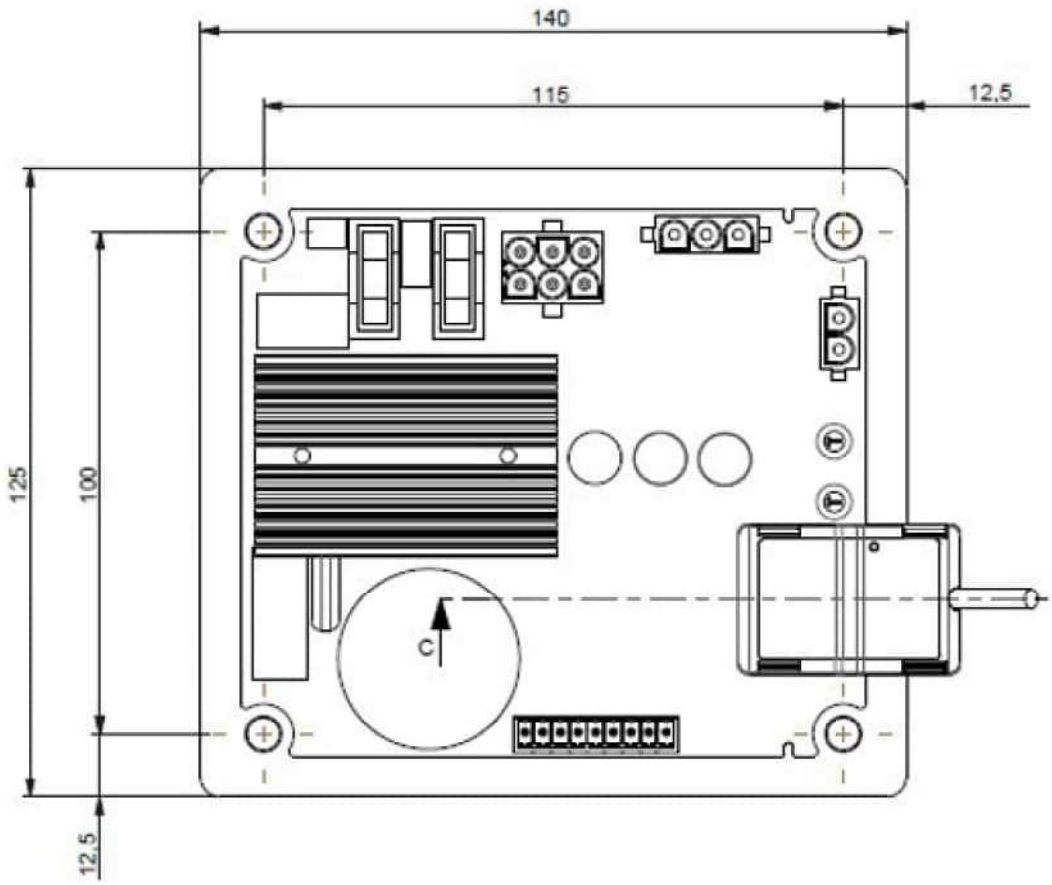

LET'S DO THE WORK.™

©2023 Caterpillar
All rights reserved.
Materials and specifications are subject to change without notice.
The International System of Units (SI) is used in this publication. CAT, CATERPILLAR, LET'S DO THE WORK, their respective logos, "Caterpillar Corporate Yellow", the "Power Edge" and Cat "Modern Hex" trade dress as well as corporate and product identity used herein, are trademarks of Caterpillar and may not be used without permission.

LEHE1923-00 (03/23)

General and Functional Specifications*

- Conformity: ±3% at 5 VDC
- Operating temperature: -40° to 80°C (-40°F to 176°F)
- Accuracy: ±4% of full scale. (float gauge errors not included.)
- Repeatability: ±1%.
- Operational voltage range: 3.5 to 6.0 VDC
- Output voltage: ratiometric 10−90% of input voltage @ 10−90% volume
- Resolution – infinite
- Operating current: 4.5 mA
- Output current: ± 1 mA
- Hall Effect modules are UL classified as intrinsically safe for Class 1, Division 1, Groups C and D (hazardous locations)

Gauge Materials of Construction*

- Head – die cast aluminum.
- Center shaft, support tube, and float rod – tempered aluminum
- Gears, cross stud, and bearing – stainless steel
- Drive magnet – alnico
- Gear housing – acetal
- Float – nitrile rubber

Dial Materials of Construction*

- Crystal and case: polycarbonate.
- Dial – painted aluminum

*Materials and specifications are subject to change without notice. Ratings subject to change due to temperature and other environmental considerations.

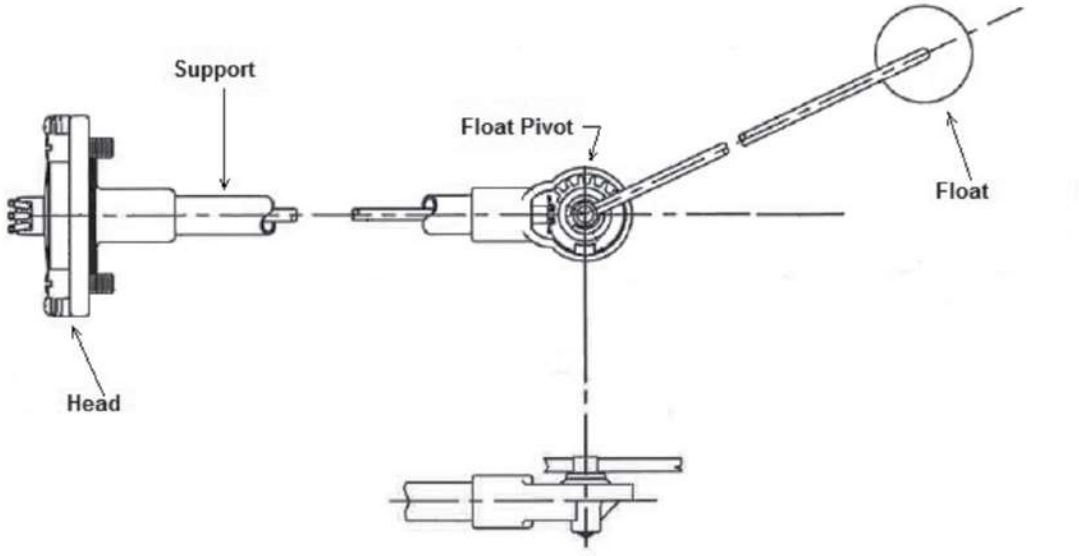

www.Cat-ElectricPower.com
©2015 Caterpillar
All rights reserved.

Materials and specifications are subject to change without notice. CAT, CATERPILLAR, their respective logos, “Caterpillar Yellow”, the “Power Edge” trade dress as well as corporate and product identity used herein, are trademarks of Caterpillar and may not be used without permission.

GCCP 1.2
Control Panel



Image shown may not reflect actual configuration.

GCCP 1.2 – Control Panel

GCCP 1.2 is an Auto Start Control Module suitable for a wide variety of diesel gen-set applications. Monitoring an extensive number of engine parameters, the modules will display warnings, shutdown and engine status information on the back-lit LCD screen, illuminated LEDs and remote PC.

Description

The controller is compatible with electronic (CAN) and non-electronic (magnetic pick-up/alternator sensing) engines and offer an extensive number of flexible inputs, outputs and extensive engine protections so the system can be easily adapted to meet the most demanding industry requirements.

The extensive list of features includes enhanced event and performance monitoring, remote communications & PLC functionality. The modules can be easily configured using a configuration suite PC software.

Full Range of Attachments

- Wide range of system expansion attachments, designed specifically to work with the GCCP controller
- Flexible packaging options for easy and cost effective installation

Benefits

- Hours counter provides accurate information for monitoring and maintenance periods
- User-friendly set-up and button layout for ease of use
- Multiple parameters are monitored & displayed simultaneously for full visibility
- The module can be configured to suit a wide range of applications for user flexibility
- PLC editor allows user configurable functions to meet user specific application requirements
- RS485 Communication port can be used for the Remote Monitoring Communication (Compatible with Cat PLG)

World Wide Product Support

- Cat dealers provide extensive pre and post sale support
- Cat dealers have over 1,600 dealer branch stores operating in 200 countries

Features

- 4-line back-lit LCD text display
- Multiple display languages
- Five-key menu navigation
- LCD alarm indication
- Customisable power-up text and images
- Data logging facility
- Internal PLC editor
- Protections disable feature
- Fully configurable via PC using USB & RS485 communication
- Front panel configuration with PIN protection
- Power save mode
- 3-phase generator sensing and protection
- Generator current and power monitoring (kW, kvar, kVA, pf) kW and kvar overload and reverse power alarms
- Over current protection
- Unbalanced load protection
- Breaker control via fascia buttons
- Fuel and start outputs configurable when using CAN Support for 0V to 10V & 4 mA to 20 mA sensors
- 8 Configurable digital inputs (3 available for Customer use)
- 8 Configurable digital outputs (5 available for Customer use)
- 4 Configurable analogue inputs (3 available for Customer use)
- CAN, MPU and alternator frequency speed sensing in one variant
- Real time clock
- Engine pre-heat and post-heat functions
- Engine run-time scheduler
- Engine idle control for starting & stopping
- Fuel usage monitor and low fuel level alarms
- 3 Configurable maintenance alarms
- MODBUS RTU & TCP support
- User configurable MODBUS pages

SPECIFICATIONS

DC SUPPLY

CONTINUOUS VOLTAGE RATING

8V to 35V continuous
5V for upto 1 minute

CRANKING DROPOUTS

Able to survive 0V for 100 mS, providing supply was at least 10V before dropout and supply recovers to 5V. This is achieved without the need for internal batteries.

LEDs and backlight will not be maintained during cranking

MAXIMUM OPERATING CURRENT

260 mA at 12V, 150 mA at 24V

MAXIMUM STANDBY CURRENT

145 mA at 12V, 85 mA at 24V

CHARGE FAIL/EXCITATION RANGE

0V to 35V

GENERATOR & MAINS (UTILITY) VOLTAGE RANGE

15V to 415 V AC (Ph to N)
26 V to 719 V AC (Ph to Ph)

MAGNETIC PICK-UP VOLTAGE RANGE

+/- 0.5 V to 70 V

FREQUENCY RANGE

10,000 Hz (max)

INPUTS

DIGITAL INPUTS A TO H

Negative switching

ANALOGUE INPUTS A TO D

Configurable as:

Negative switching digital input 0-10V sensor 4 mA to 20 mA Resistive Sensor

ANALOGUE INPUTS A TO C

Configurable as:

Negative switching digital input Resistive Sensor

OUTPUTS

OUTPUT A and B (FUEL & START)

15 A DC at supply voltage

AUXILIARY OUTPUTS C, D, E, F, G, H, I & J 2

A DC at supply voltage

DIMENSIONS

OVERALL

216 mm x 158 mm x 43 mm
8.5" x 6.2" x 1.5"

PANEL CUTOUT

184 mm x 137 mm
7.2" x 5.3"

MAXIMUM PANEL THICKNESS

8 mm
0.3"

OPERATING TEMPERATURE

-30°C to +70°C
-22°F to +158°F

STORAGE TEMPERATURE RANGE

-40°C to +85°C
-40°F to +185°F

STANDARDS

UL, cUL Listed
NFPA 70#
Electro-Magnetic Compatibility: BS EN 61000-6-2/6-4 Electrical Safety: BS EN 60950
Temperature: BS EN 60068-2-1, BS EN 60068-2-2
Vibration: BS EN 60068-2-6
Humidity: BS EN 60068-2-30, BS EN 60068-2-78 Shock: BS EN 60068-2-27
Degrees of protection provided by enclosures: BS EN 60529 Ingress Protection: IP65 – Front of module when installed into the control panel with the optional sealing gasket
Applicable codes and standards facilitate compliance to NFPA 70

Input Expansion Module

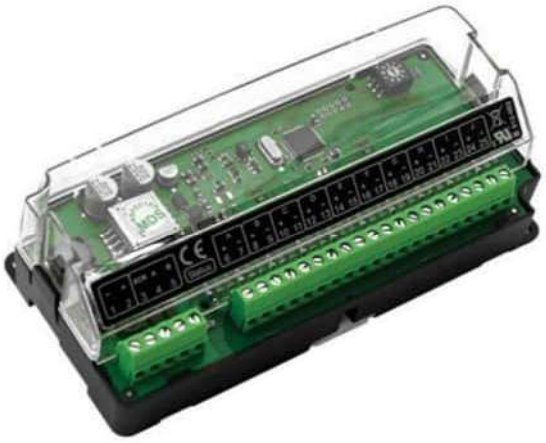

Picture shown may not reflect actual configuration.

Input Expansion Module

The Ratiometric Input Expansion module is used in conjunction with supported controllers to provide additional, flexible, input functionality. The module's ID switch is configurable from the module and the 10 inputs can be configured from within the 'host controller'.

The ratiometric inputs can be configured in a number of ways to connect to digital switches, resistive sensors, 0 – 10 V DC signals or 4 – 20 mA signals.

LED indication is provided for 'Power On' and 'Link Lost'.

Features

- Power On/Link Lost LED
- 10 inputs configurable for digital/resistive 4 – 20 mA and 0 – 10 V DC
- A maximum of 4 modules can be connected to 1 host control module to provide up to 40 additional configurable inputs
- Works up to 1.2 km (0.75 miles) from the host controller
- Terminal strip connection for quick and easy set-up

ENVIRONMENTAL TESTING STANDARD

ELECTRO-MAGNETIC COMPATIBILITY

BS EN 61000-6-2
EMC Generic Immunity Standard for the Industrial Environment
BS EN 61000-6-4
EMC Generic Emission Standard for the Industrial Environment

ELECTRICAL SAFETY

BS EN 60950
Safety of Information Technology Equipment, including Electrical Business Equipment

TEMPERATURE

BS EN 60068-2-1
Ab/Ae Cold Test -30 °C BS EN 60068-2-2
Bb/Be Dry Heat +70°C

VIBRATION

BS EN 60068-2-6
Ten sweeps in each of three major axes
5 Hz to 8 Hz @ +/-7.5 mm, 8 Hz to 500 Hz @ 2 gn

SHOCK

BS EN 60068-2-27
Three shocks in each of three major axes 15 gn in 11 Ms

HUMIDITY

BS EN 60068-2-30
Db Damp Heat Cyclic 20/55°C @ 95% RH 48 Hours
BS EN 60068-2-78
Cab Damp Heat Static 40°C @ 93% RH 48 Hours

DEGREES OF PROTECTION PROVIDED BY ENCLOSURES BS EN 60529

IP21

SPECIFICATION

CONTINUOUS VOLTAGE RATING

8 V to 35 V Continuous

CRANKING DROPOUTS

Able to survive 0 V for 50 mS, providing supply was at least 10 V before dropout and supply recovers to 5 V. This is achieved without the need for internal batteries. LEDs light will not be maintained during cranking.

MAXIMUM OPERATING CURRENT

292 mA at 12 V, 167 mA at 24 V mA at 24 V

MAXIMUM STANDBY CURRENT

101 mA at 12 V, 167 mA at 24 V

INPUTS

10 inputs configurable for digital/resistive (3k ohms) 4 – 20 mA and 0 – 10 V DC

DIMENSIONS OVERALL

165 mm x 76 mm x 49 mm

STROAGE TEMPERATURE RANGE

-40°C to + 85°C

LET'S DO THE WORK.™

www.cat.com/electricpower

©2023 Caterpillar
All rights reserved.
Materials and specifications are subject to change without notice.
The International System of Units (SI) is used in this publication. CAT, CATERPILLAR, LET'S DO THE WORK, their respective logos, "Caterpillar Corporate Yellow", the "Power Edge" and Cat "Modern Hex" trade dress as well as corporate and product identity used herein, are trademarks of Caterpillar and may not be used without permission.

LEHE2019-01 (03/23)

Output Expansion Module



Picture shown may not reflect actual configuration.

Output Expansion Module

Output relay expansion module for use with compatible control modules. The Output Expansion module has been designed to extend a host module's output capabilities.

A maximum of 10 Output Expansion modules can be connected to an individual module at any one time. All outputs are configurable via the host controller.

The module will work up to 1 KM (0.6miles) from the host control module.

Features

- Power On/Link Lost LED ID SWITCH
- 10 expansion modules can be connected to 1 host controller at a time
- 8 configurable relay contacts with LED indicators
- 4 Normally Open (N/O)
- 4 Change Over (C/O)
- Terminal strip connection for quick and easy set-up

ENVIRONMENTAL TESTING STANDARD

ELECTRO-MAGNETIC COMPATIBILITY

BS EN 61000-6-2
EMC Generic Immunity Standard for the Industrial Environment
BS EN 61000-6-4
EMC Generic Emission Standard for the Industrial Environment

ELECTRICAL SAFETY

BS EN 60950
Safety of Information Technology Equipment, including Electrical Business Equipment

TEMPERATURE

BS EN 60068-2-1
Ab/Ae Cold Test -30 °C BS EN 60068-2-2
Bb/Be Dry Heat +70°C

VIBRATION

BS EN 60068-2-6
Ten sweeps in each of three major axes
5 Hz to 8 Hz @ +/-7.5 mm, 8 Hz to 500 Hz @ 2 gn

SHOCK

BS EN 60068-2-27
Three shocks in each of three major axes 15 gn in 11 Ms

HUMIDITY

BS EN 60068-2-30
Db Damp Heat Cyclic 20/55 °C @ 95% RH 48 Hours BS EN 60068-2-78
Cab Damp Heat Static 40 °C @ 93% RH 48 Hours

SPECIFICATION

CONTINUOUS VOLTAGE RATING

8 V to 35 V Continuous

CRANKING DROPOUTS

Able to survive 0 V for 50 mS, providing supply was at least 10 V before dropout and supply recovers to 5 V. This is achieved without the need for internal batteries. LEDs and backlight will not be maintained during cranking.

MAXIMUM OPERATING CURRENT

325 mA at 12 V, 152 mA at 24 V

MAXIMUM STANDBY CURRENT

70 mA at 12 V, 32 mA at 24 V

AUXILIARY RELAY CONTACTS

2 Amp DC rated voltage free

DIMENSIONS OVERALL

165 mm x 76 mm x 49 mm
6.5" x 3" x 1.9"

LET'S DO THE WORK.™

www.cat.com/electricpower
©2023 Caterpillar
All rights reserved.
Materials and specifications are subject to change without notice.
The International System of Units (SI) is used in this publication. CAT, CATERPILLAR, LET'S DO THE WORK, their respective logos, "Caterpillar Corporate Yellow", the "Power Edge" and Cat "Modern Hex" trade dress as well as corporate and product identity used herein, are trademarks of Caterpillar and may not be used without permission.

LEHE2020-01 (03/23)

DSEGenset

DSE2152
ANALOGUE OUTPUT EXPANSION MODULE

The DSE2152 Analogue Output Expansion Module is used in conjunction with supported DSENet controllers to provide 6 additional outputs. The outputs can be individually configured as 0 to 10 V or 4 to 20 mA, via the 'host controller'.

LED indication is provided for 'Power On' and 'Link Lost'

The DSE2152 is designed to be mounted within a control panel, either on the panel DIN rail utilising the integral mounts, or chassis mounted, utilising the mounting holes.

Up to four DSE2152 modules can be linked together to provide up to 24 additional outputs. An ID switch is provided on the module for identification.

ENVIRONMENTAL TESTING STANDARDS

ELECTRO MAGNETIC COMPATIBILITY
BS EN 61000-6-2
EMC Generic Immunity Standard for the Industrial Environment
BS EN 61000-6-4
EMC Generic Emission Standard for the Industrial Environment

ELECTRICAL SAFETY
BS EN 60950
Safety of Information Technology Equipment, including Electrical Business Equipment

TEMPERATURE
BS EN 60068-2-1
Ab/Ae Cold Test -30 °C
BS EN 60068-2-2
Bb/Be Dry Heat +70 °C

VIBRATION
BS EN 60068-2-6
Ten sweeps in each of three major axes
5 Hz to 8 Hz at +/-7.5 mm, 8 Hz to 500 Hz at 2 gn

HUMIDITY
BS EN 60068-2-30
Db Damp Heat Cyclic 20/55 °C at 95% RH 48 Hours
BS EN 60068-2-78
Cab Damp Heat Static 40 °C at 93% RH 48 Hours

SHOCK
BS EN 60068-2-27
Three shocks in each of three major axes
15 gn in 11 mS

DEGREES OF PROTECTION PROVIDED BY ENCLOSURES
BS EN 60529
IP21

COMPREHENSIVE FEATURE LIST TO SUIT A WIDE VARIETY OF GEN-SET APPLICATIONS

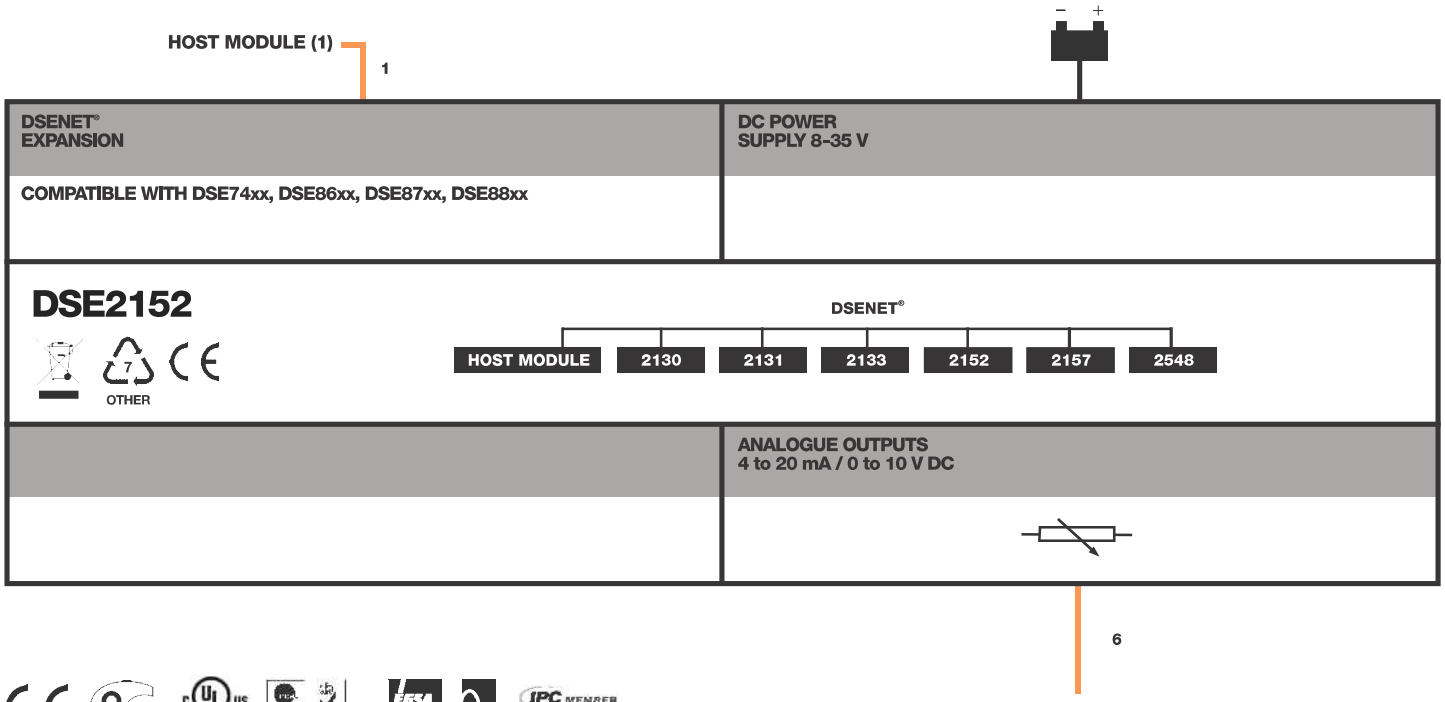

DSEGenset

DSE2152
ANALOGUE OUTPUT EXPANSION MODULE

DSE**2152**

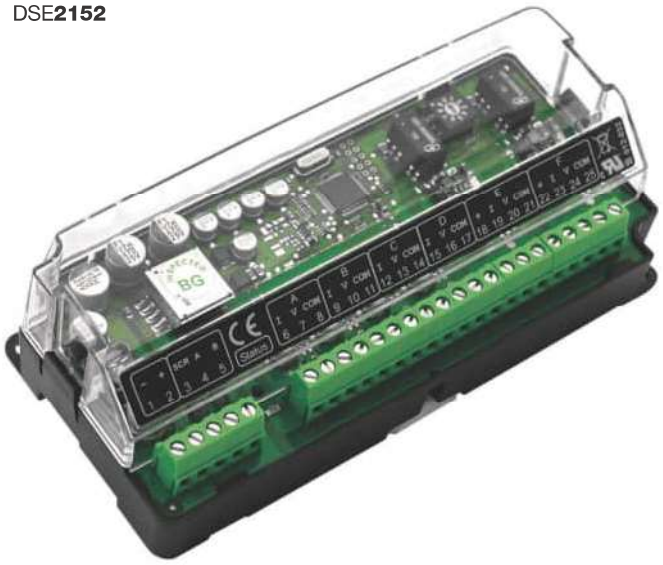

KEY FEATURES
- Analogue output expansion module for supported DSENet controllers
- 6 outputs configurable as 4 to 20mA (0 to 20mA) and 0 to 10 V DC
- Power On/Link Lost LED
- A maximum of 4 modules can be connected to 1 host control module to provide up to 24 additional configurable outputs
- Works up to 1.2 km (0.75 miles) from the host controller
- Terminal strip conection for quick and easy set up
- Simplified configuration using DSE PC Configuration Suite Software through host controller

KEY BENEFIT
- Ideal for applications where additional control monitoring is critical

SPECIFICATION

DC SUPPLY
8 V to 35 V continuous

CRANKING DROPOUTS
Able to survive 0 V for 50 mS, providing supply was at least 10 V before dropout and supply recovers to 5 V. This is achieved without the need for internal batteries. LEDs will not be maintained during cranking.

MAXIMUM OPERATING CURRENT
120 mA at 12 V, 60 mA at 24 V

OUTPUTS
OUTPUT A, B, C & D
Non-Isolated
Configurable As: 4 to 20 mA DC or
0 V to 10 V DC

OUTPUT E & F
Optional Isolation
Configurable As: 4 to 20 mA DC or
0 V to 10 V DC

DIMENSIONS
OVERALL
165 mm x 76 mm x 49 mm
6.5” x 3” x 1.9”

STORAGE TEMPERATURE RANGE
-40 °C to +85 °C
-40 °F to +185 °F

OPERATING TEMPERATURE RANGE
-30°C to +70°C
-22 °F to +158 °F

RELATED MATERIALS

TITLE	PART NO’S
DSE2152 Installation Instructions	053-134
DSE2152 Operator Manual	057-141
DSE7410/20 Data Sheet	055-108
DSE8610 Data Sheet	055-083
DSE8620 Data Sheet	055-099
DSE8660 Data Sheet	055-086
DSE8710 Data Sheet	055-184
DSE8760 Data Sheet	055-185
DSE8810 Data Sheet	055-116
DSE8860 Data Sheet	055-139

DEEP SEA ELECTRONICS PLC UK
Highfield House, Hunmanby Industrial Estate, Hunmanby YO14 0PH
TELEPHONE +44 (0) 1723 890099 **FACSIMILE** +44 (0) 1723 893303
EMAIL sales@deepseaplc.com **WEBSITE** www.deepseaplc.com

DEEP SEA ELECTRONICS INC USA
3230 Williams Avenue, Rockford, IL 61101-2668 USA
TELEPHONE +1 (815) 316 8706 **FACSIMILE** +1 (815) 316 8708
EMAIL sales@deepseausa.com **WEBSITE** www.deepseausa.com

Deep Sea Electronics Plc maintains a policy of continuous development and reserves the right to change the details shown on this data sheet without prior notice. The contents are intended for guidance only.

Registered in England & Wales No.01319649
VAT No.316923457

Annunciators



Picture shown may not reflect actual configuration.

Local Annunicator Module

It is an LED expansion module that can be used with compatible control modules. The module has been designed to display a maximum of eight individual LED indications up to a maximum distance of 1 KM (0.6 miles).

The Annunciator will consist of two modules to provide a 16 Channel Fault annunciation.

It is presented in a vertical enclosure. It includes an alarm sounder that is triggered when the host controller detects an alarm condition. The alarm can be muted using the front push button.

The Panels will be fitted with removable label cards which can be used to identify the standard NFPA alarms if desired.

It includes individual LEDs for each channel and a 'Power On' LED that flashes when the link with the host controller is lost.

Features

- The Local annunciator has an integral Sounder/Horn
- Eight configurable LEDs (per module)
- Works up to 1 KM (0.6 miles) from the host controller
- A single controller can support five Caterpillar configured remote annunciator control boxes

ENVIRONMENTAL TESTING STANDARD

ELECTRO-MAGNETIC COMPATIBILITY

BS EN 61000-6-2
EMC Generic Immunity Standard for the Industrial Environment
BS EN 61000-6-4
EMC Generic Emission Standard for the Industrial Environment

ELECTRICAL SAFETY

BS EN 60950
Safety of Information Technology Equipment, including Electrical Business Equipment

TEMPERATURE

BS EN 60068-2-1
Ab/Ae Cold Test -30 °C BS EN 60068-2-2
Bb/Be Dry Heat +70°C

VIBRATION

BS EN 60068-2-6
Ten sweeps in each of three major axes
5 Hz to 8 Hz @ +/-7.5 mm, 8 Hz to 500 Hz @ 2 gn

SHOCK

BS EN 60068-2-27
Three shocks in each of three major axes 15 gn in 11 Ms

HUMIDITY

BS EN 60068-2-30
Db Damp Heat Cyclic 20/55 °C @ 95% RH 48 Hours
BS EN 60068-2-78
Cab Damp Heat Static 40 °C @ 93% RH 48 Hours

DEGREES OF PROTECTION PROVIDED BY ENCLOSURES BS EN 60529

IP65 – Front of module when installed into the control panel with the supplied sealing gasket.

SPECIFICATION

CONTINUOUS VOLTAGE RATING

8 V to 35 V Continuous

CRANKING DROPOUTS

Able to survive 0 V for 50 mS, providing supply was at least 10 V before dropout and supply recovers to 5 V. This is achieved without the need for internal batteries. LEDs and backlight will not be maintained during cranking.

MAXIMUM OPERATING CURRENT

112 mA at 12 V, 53 mA at 24 V

MAXIMUM STANDBY CURRENT

74 mA at 12 V, 35 mA at 24 V

DIMENSIONS OVERALL

355 mm x 369 mm x 90 mm
13.6" x 14.5" x 3.5"

PANEL CUT-OUT

286 mm x 326 mm x 93 mm
11.2" x 12.8" x 3.6"

MAXIMUM PANEL THICKNESS

8 mm
0.3"

LET'S DO THE WORK.™

www.cat.com/electricpower
©2023 Caterpillar
All rights reserved.
Materials and specifications are subject to change without notice.
The International System of Units (SI) is used in this publication. CAT, CATERPILLAR, LET'S DO THE WORK, their respective logos, "Caterpillar Corporate Yellow", the "Power Edge" and Cat "Modern Hex" trade dress as well as corporate and product identity used herein, are trademarks of Caterpillar and may not be used without permission.

LEHE2021-01 (03/23)

CATERPILLAR®

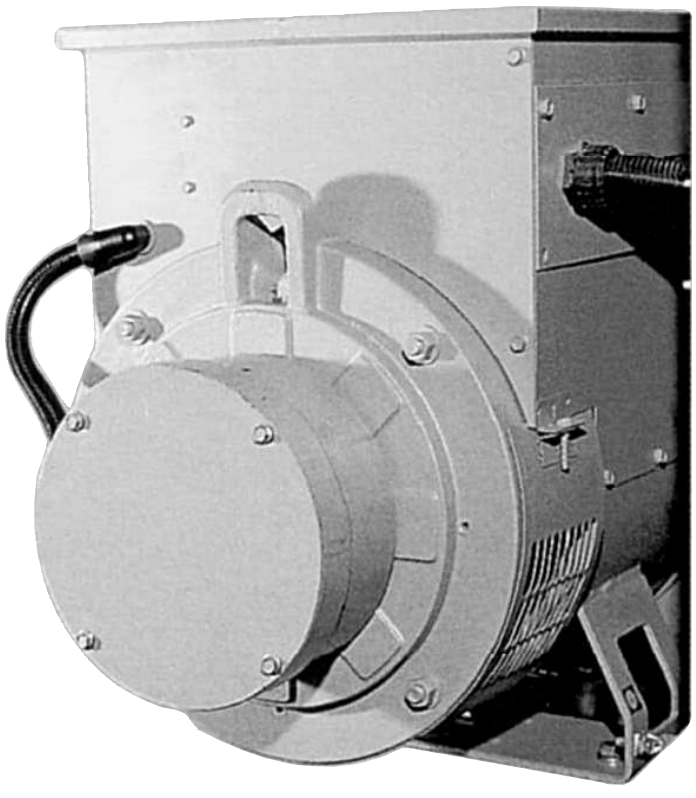

AVR12 – PERMANENT MAGNET GENERATOR

The permanent magnet generator (PMG) option upgrades the excitation system of the generator from the standard self-excited system to a separately-excited system. The PMG couples to the non-drive end of the generator and provides an independent source of excitation power that ensures initial voltage build-up. The PMG improves the voltage response of the generator during transient load application, such as motor starting, and provides a sustained short-circuit current for the operation of protective devices. Isolation of the excitation power ensures that regulation is not affected by non-linear distorting loads.

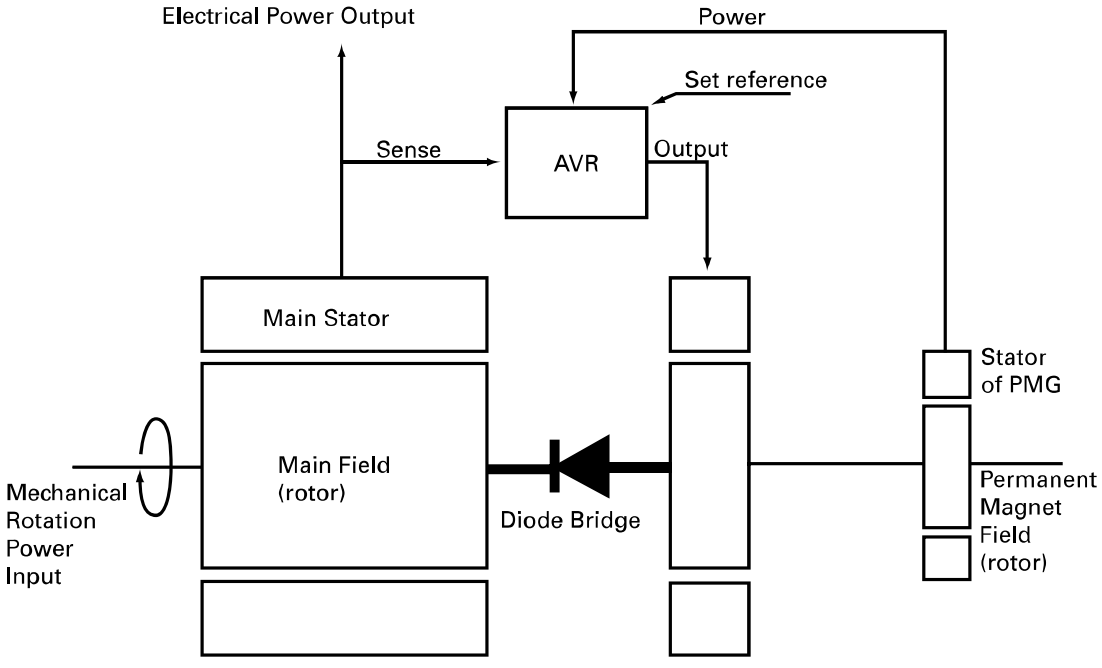

BLOCK DIAGRAM OF PMG

Market: N. America

LEHE4015 (01-05)

www.cat-ElectricPower.com

© 2005 Caterpillar
All Rights Reserved.
Printed in U.S.A.

Circuit Breakers



Moulded Case Circuit Breakers:

100 A – 3000 A
200 kW – 750 kW Gensets

Features

- 100% UL Listing
- Electronic Trip Units
- Double insulation
- Clear indication of breaker status
- Can be used in normal operation in an ambient of –25°and+70° C
- Auxiliary contacts available
- Insulating case constructed from fiberglass reinforced synthetic resin
- Anti-corrosion treatment on all metal parts
- Optional 2 or 3 Circuit Breakers

Conformity with International Standards

Circuit Breakers have been designed to comply with these major standards:

- UL 489
- CSA22.2
- IEC 60947-2
- NEMA AB1

C9, C13, C15, C18 Circuit Breakers

Manually Operated Circuit Breakers

Current (A)	Frame	Number of Poles	Interrupting Ratings (kA ms)			Trip Unit	(Lugs) Cable Size Range / Phase	Auxilliary Options
			240V	480V	600V			
100	H	3	65	35	18	Electronic LSI	8-3/0 AWG	Form C (1 NO + 1 NC) Shunt Trip 24 VDC
250	J	3	65	35	18		(2) 3/0 – 250 kcmil	
400	XT5	3	65	35	18	Electronic LS/I (S or I) or LSI	(2) 2/0 – 500 kcmil	1 Form C + 1 Bell Alarm 60 VAC/VDC Shunt Trip 24 VDC
600	XT6	3	65	35	20		(3) 2/0 – 400 kcmil	
800	XT6	3	65	35	20		(3) 2/0 – 400 kcmil	
1200	XT7	3	65	50	25		(4) 4/0 – 500 kcmil	1 Form C + 1 Bell Alarm Shunt Trip 24 VAC/VDC
1600	T8	3	65	35	18	Electronic LSI	BUS BAR	Form C (1 NO + 1 NC) Shunt Trip 24 VDC
2000	T8	3	65	35	18		BUS BAR	
2500	T8	3	65	35	18		BUS BAR	
3000	T8	3	65	35	18		BUS BAR	

Electrically Operated Circuit Breakers

Current (A)	Frame	Number of Poles	Interrupting Ratings (kA ms)			Trip Unit	(Lugs) Cable Size Range / Phase	Auxilliary Options
			240V	480V	600V			
800	XT7M	3	65	50	25	Electronic LSI	(4) 4/0 – 500 kcmil	2 Form C + 1 Bell Alarm 24 VDC
1200	XT7M	3	65	50	25	Electronic LSI	(4) 4/0 – 500 kcmil	2 Form C + 1 Bell Alarm 24 VDC
2000	T 8M-S	3	125	125	100	Electronic LSI	BUS BAR	2 Form C + 1 Bell Alarm 24 VDC
3000	T 8M-S	3	125	125	100	Electronic LSI	BUS BAR	2 Form C + 1 Bell Alarm 24 VDC

L-I Mode

- Long Time / Overload Protection, "L" has an adjustable trip threshold and adjustable time delay.
- Instantaneous Short Circuit Protection, "I" has an adjustable short circuit trip threshold and once exceeded will cause the circuit breaker to trip instantaneously.

L-S Mode

- Long Time / Overload Protection, "L" has an adjustable trip threshold and adjustable time delay.
- Short Circuit Protection, "S" has an adjustable short circuit trip threshold and adjustable time delay if necessary for coordinating with downstream loads.
- Instantaneous Short Circuit Protection, "I" is still included, but the threshold level is not adjustable and exists at a predetermined level.

Electronic L-S-I Trip Units

- Long Time/Overload Protection, "L" has an adjustable trip threshold and adjustable time delay.
- Short Circuit Protection, "S" has an adjustable short circuit trip threshold and adjustable time delay if necessary for coordinating with downstream loads.
- Instantaneous Short Circuit Protection, "I" has an adjustable short circuit trip threshold and once exceeded will cause the circuit breaker to trip instantaneously.

Circuit Breakers

Single Breaker Options (250 – 3000A)

Model	Current (A)	Operation
C9	100	Manually Operated
C9	250	Manually Operated
C9	400	Manually Operated
C9 , C13 , C15 , C18	600	Manually Operated
C9 , C13 , C15 , C18	800	Manually Operated or Electrically Operated
C9 , C13 , C15 , C18	1200	Manually Operated or Electrically Operated
C13 , C15 , C18	1600	Manually Operated
C15 , C18	2000	Manually Operated or Electrically Operated
C18	2500	Manually Operated
C18	3000	Manually Operated or Electrically Operated

Multiple Breaker Options

Model	Main Breaker Box		Auxiliary Box
	1st Breaker (Amps) Manually Operated	2nd Breaker (Amps) Manually Operated	Breaker (Amps) Manually Operated
C9 , C13 , C15 , C18	100	100, 250, 400, 600, 800, or 1200	3rd Breaker: 100, 250 or 400 (Not availabe if 1st & 2nd Breaker = 1200A)
C9 , C13 , C15 , C18	250		
C9 , C13 , C15 , C18	400		
C9 , C13 , C15 , C18	600		
C9 , C13 , C15 , C18	800		
C9 , C13 , C15 , C18	1200		
C13 , C15 , C18	1600	Not Available	2nd Breaker: 100, 250 or 400
C15 , C18	2000		
C18	2500		
C18	3000		

XT6 Ekip Dip LSI
L-S-I Functions

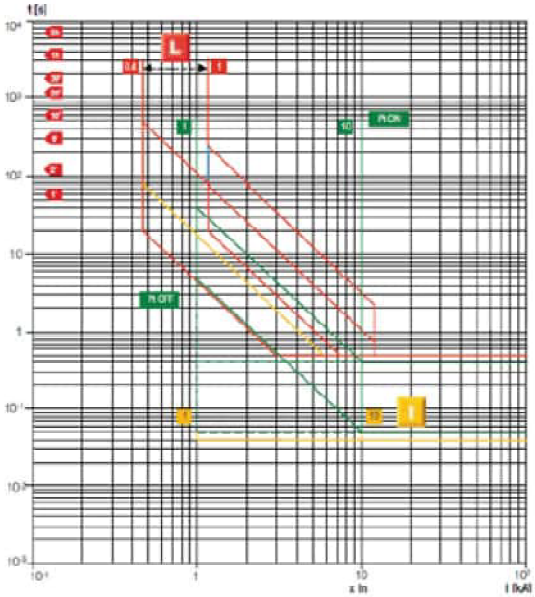

XT6 Ekip Dip LS/I
L-S-I Functions

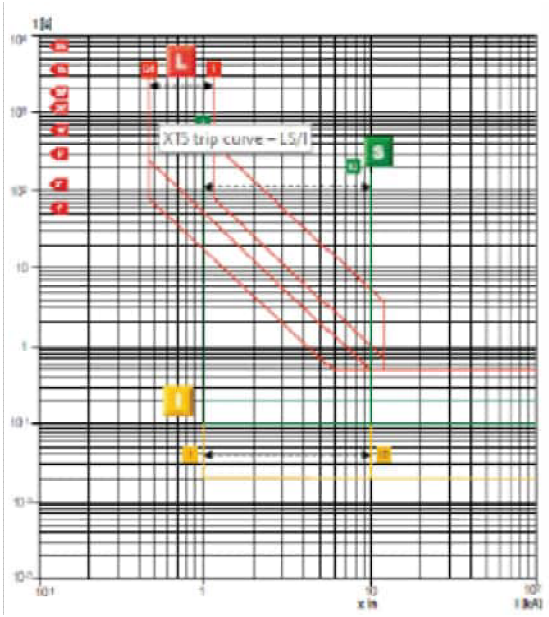

Figure 7

XT5 – XT6 Ekip Dip LS/I
L-S-I Functions

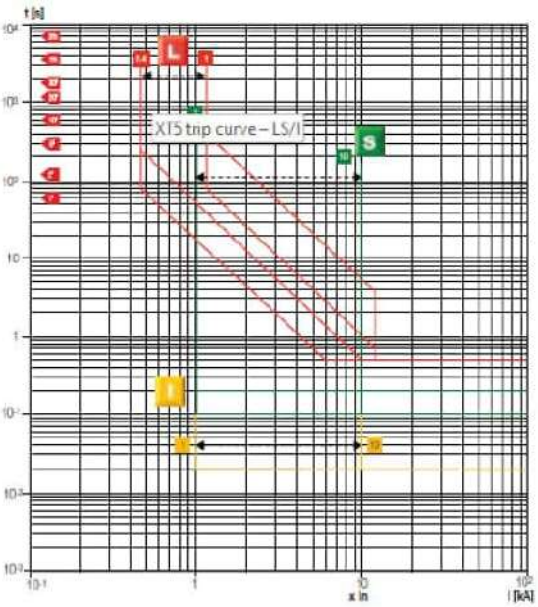

Figure 8

CATERPILLAR®

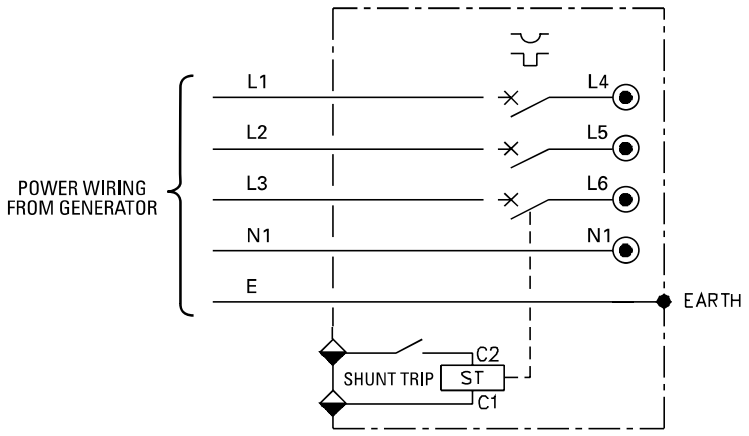

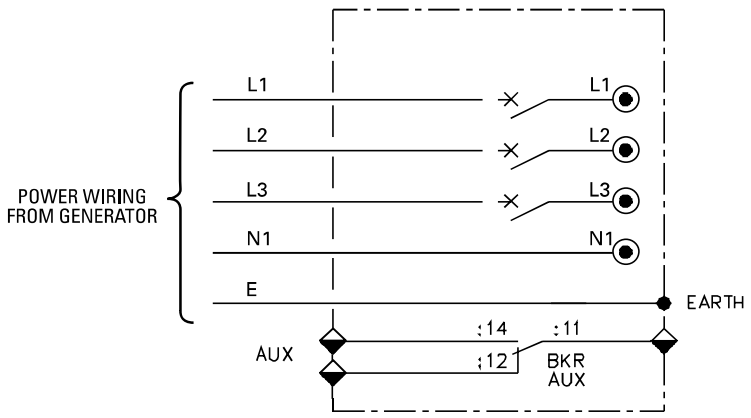

BREAKER BOX TERMINAL
POWER CONNECTION

AUX – AUXILIARY CONTACTS SHT2 – 12/24 V SHUNT TRIP

Option SHT2 adds a DC operated shunt trip which can be used to automatically open the circuit breaker upon activation of a generator set shut down signal from the generator set control panel, or from a remote signal (supplied by others).

Option AUX adds an auxiliary changeover switch which can be used for remote indication of the circuit breaker status.

Market: N. America

LEHE4009 (01-05)

Information contained in this publication may be considered confidential.
Discretion is recommended when distributing.
Materials and specifications are subject to change without notice.

www.cat-ElectricPower.com

© 2005 Caterpillar
All Rights Reserved.
Printed in U.S.A.

125 Amp Load Center



Image shown may not reflect actual package.

SPECIFICATIONS

Line Rated Current	125 A
Number of spaces	8
Number of circuits	16
Number of tandem circuit breakers	8
System Voltage	120/240 V AC
NEMA degree of protection	NEMA 3R outdoor
Electrical connection	Lugs
Wiring configuration	3-wire
Material	Tin plated aluminium busbar
Enclosure material	Galvannealed steel
Cover finish	Gray baked enamel
Product certifications	UL Listed

www.Cat-ElectricPower.com
©2016 Caterpillar
All rights reserved.

Materials and specifications are subject to change without notice.
CAT, CATERPILLAR, their respective logos, “Caterpillar Yellow”,
the “Power Edge” trade dress as well as corporate and product identity used
herein, are trademarks of Caterpillar and may not be used without permission.



Image shown may not reflect actual configuration.

20A Tamper-Resistant, Weather-Resistant GFCI Receptacles

Features and Benefits

- Automatically tests the GFCI every time the reset button is pushed in. The GFCI will not reset if the GFCI circuit is not functioning properly.
- By blocking reset of the GFCI if protection has been compromised, SmartLockPRO reduces the possibility of end-users incorrectly assuming that a reset GFCI outlet is providing ground fault protection when it actually is not.
- A line-load reversal diagnostic feature is provided which prevents the GFCI from being reset and stops power from being fed to the GFCI receptacle face or through to downstream devices. A green LED indicator on the GFCI's face also illuminates to alert the installer to the line-load wiring reversal.

Weather-Resistant GFCIs

- Meet UL 498 requirements for weather-resistant receptacles.

Tamper-Resistant GFCIs

- Shutter mechanism inside the receptacle blocks access to the contacts unless a two-prong plug is inserted, helping ensure foreign objects will be locked out.

Product Features

- Grounding: GFCI ground fault
- Feature: Weather and tamper-resistant
- Amperage: 20 Amp
- Voltage: 125 Volt
- NEMA: 5-20R
- Trip Level: Class A, 5mA plus or minus 1mA
- Pole: 2
- Wire: 3
- Color: White

Standards and Certifications

- NEMA: WD-6
- ANSI: C-73
- UL498: File E13399
- CSA C22.2 No. 42: File LR-57811
- NOM: 057
- UL 943: File E48380

Receptacles contained in a weather resistant box and in-use cover.



www.Cat-ElectricPower.com
©2016 Caterpillar
All rights reserved.

Materials and specifications are subject to change without notice. CAT, CATERPILLAR, their respective logos, "Caterpillar Yellow", the "Power Edge" trade dress as well as corporate and product identity used herein, are trademarks of Caterpillar and may not be used without permission.



Image shown may not reflect actual package.

LED Lights

Features

AC/DC Lighting Kit

- Capable of AC and DC operation with provided selector switch
- DC operation has a 60-minute timer switch to limit battery drain
- AC operation is enabled by transformer
- Low voltage, low energy circuit and operation
- Installation includes one single LED light.

Technical Data	
Theoretical Lumens Output	1600 lm
Operational Lumens Output	1000 lm
Color Temperature	5700 K
Lens	PC
Body	Aluminum
Weight	0.6 kg
IP Rating	IP68, IP6K9K
EMC	CISPR 25 Class 3, EN 12895, ISO 13766, ISO 14982, ISO 7637-2
Operating Temperatures	-40°C to +85°C (Overheat protected)

www.Cat-ElectricPower.com
©2022 Caterpillar
All rights reserved.

CAT, CATERPILLAR, LET'S DO THE WORK, their respective logos, "Caterpillar Corporate Yellow", the "Power Edge" and Cat "Modern Hex" trade dress as well as corporate and product identity used herein, are trademarks of Caterpillar and may not be used without permission.



Image shown may not reflect actual package.

Pump Style Jacket Water Heater

Single Phase 2500 Watts Pump style jacket water heater is a complete coolant preheater.
It features an integrated pump that combines the benefits of forced circulation with a compact design that can mount to a variety of small engine applications. Forced circulation of the coolant delivers uniform heating throughout the entire engine, extends element life and offers a significant reduction in electrical consumption.

UL Listed , ULc Listed
240V
Installation provided with shut-off valves

www.Cat-ElectricPower.com
©2016 Caterpillar
All rights reserved.

Materials and specifications are subject to change without notice.
CAT, CATERPILLAR, their respective logos, “Caterpillar Yellow”, the “Power Edge” trade dress as well as corporate and product identity used herein, are trademarks of Caterpillar and may not be used without permission.

AIR CLEANERS

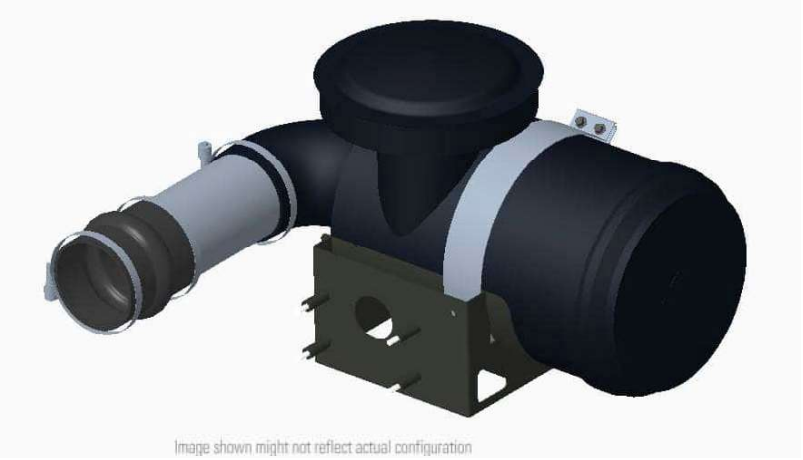

Image shown might not reflect actual configuration

AIR CLEANERS FOR C13/C15/C18 ENGINES

GENERAL DESCRIPTION

Air Cleaner reduce contaminants flowing into the air intake system, provide a high level of Engine protection from harmful contaminants and increase engine performance and fuel efficiency.

Dual element air cleaners provide additional protection for the Engine

FEATURES

- Radial Seal Technology
- Easy to read CAT filter service indicator with manual reset
- Standard Yellow Media
- Constant torque clamps
- Engine rear mounted filters with easy access to service filter to open and enclosed Gensets
- Air filters Designed for 500 hrs of service*
  *based on dust Concentration levels

Feature Code	Engine model	Dust Environment	Industry	Element	Housing
Dust Concentration level - 1-5mg/m3					
STD AIR	C13, C15, C18	Standard Duty	Factory, Office	Non-Canister	N-A
Dust Concentration level - 5-10mg/m3					
ACLSS04	C13, C15	Medium Duty	Construction, Factory	Single Element	Radial Seal, Metal Body
ACLSS05	C18	Medium Duty	Construction, Factory	Single Element	15" Radial Seal, Metal Body
ACLSS05	C18 PD 50 Hz	Medium Duty	Construction, Factory	Single Element	2off PowerCore Glass Filled Polypropylene Housing
ACLSS06	C18 60HZ	Medium Duty	Construction, Factory	Single Element	18" Radial Seal, Metal Body
ACLSS06	C18 PD 60 HZ	Medium Duty	Construction, Factory	Single Element	2off PowerCore Glass Filled Polypropylene Housing



Sample isolator

VIB4 Seismic Vibration Isolators (Zone 4)

For regions where seismic tremors are experienced, this option can be used in place of the standard anti-vibration mounting arrangement. These seismic zone 4 vibration isolators are designed to withstand the high shear forces that can arise under such seismic activity as per the 1994 Uniform Building Code. Isolators are positioned between the engine/generator mounts and the generator set base frame. The vibration isolators are matched to ensure minimal oscillation levels during generator set operation.

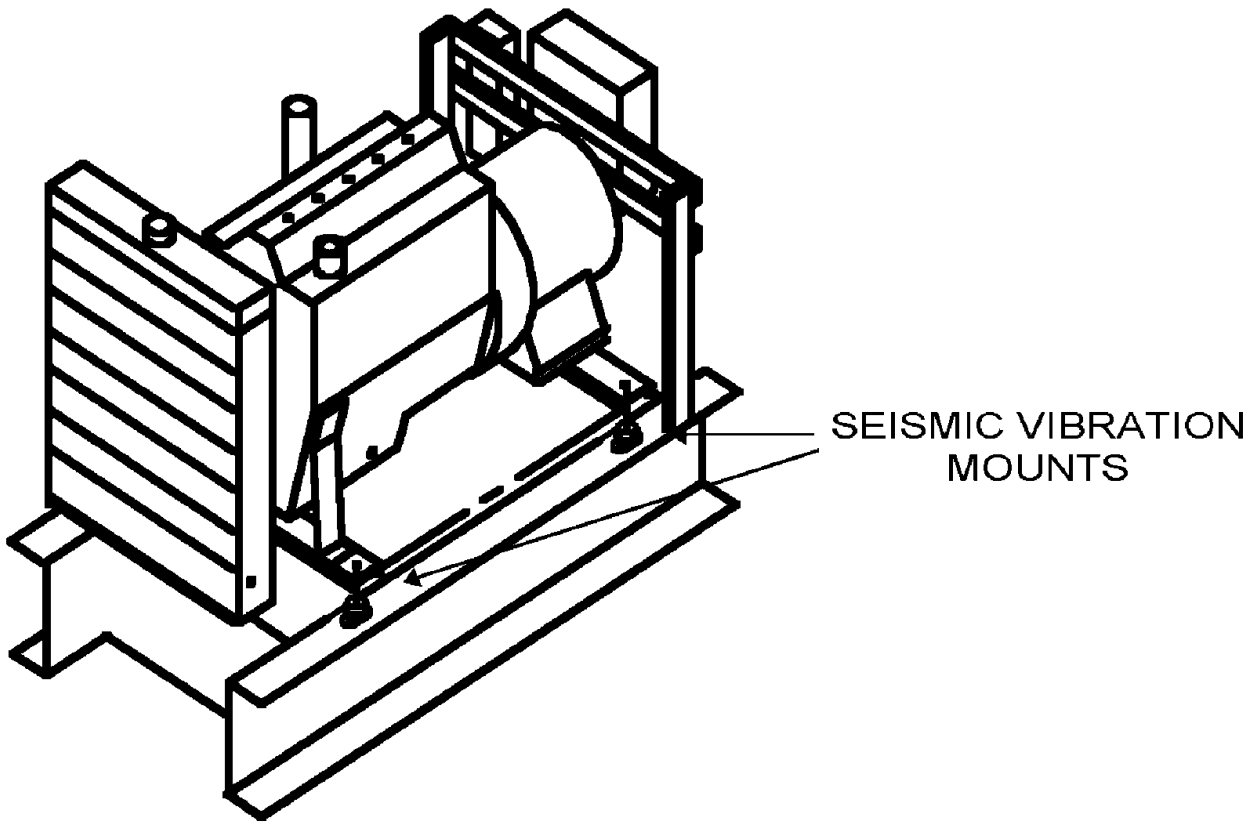

LEHE4004-02

Load vs Deflection

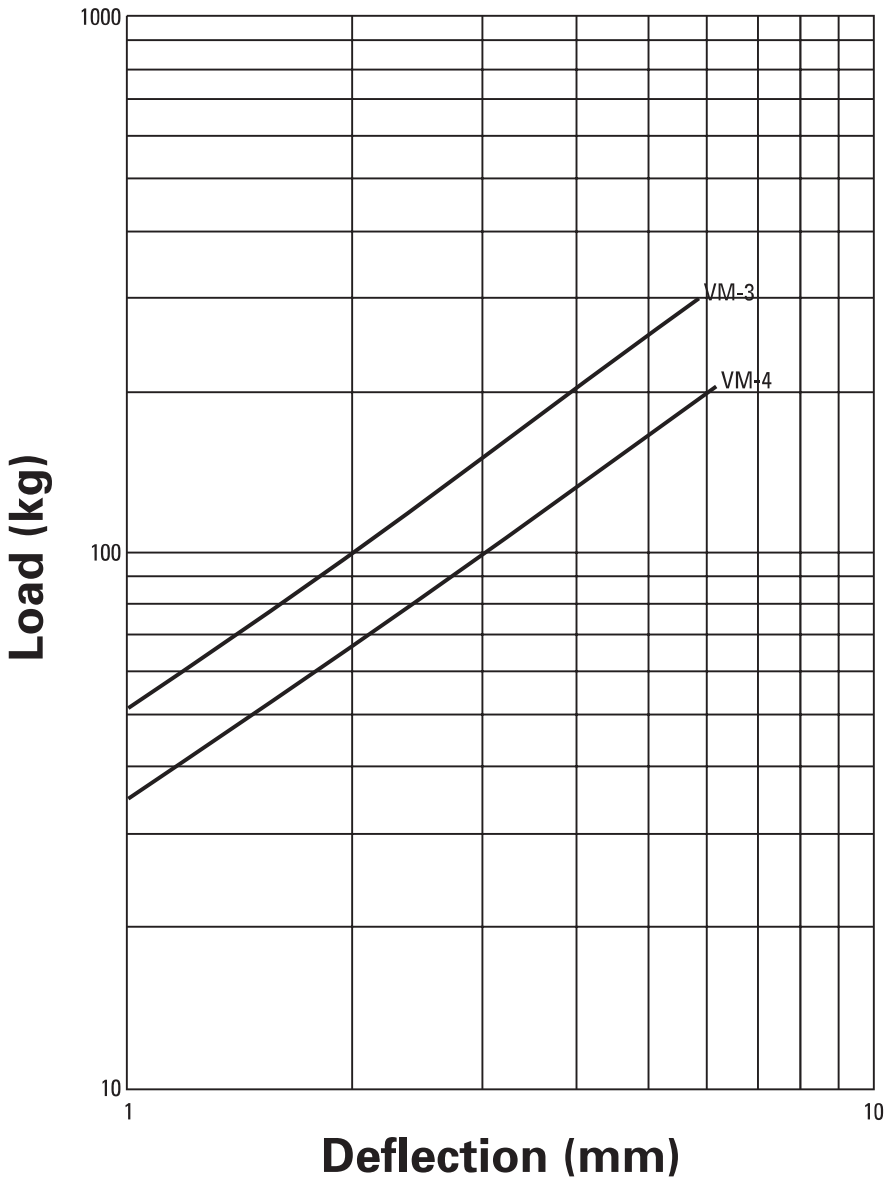

Diesel	
Engine Model	**Vib-Mt**
D25-6 D25-6S D30-8 D30-6S	VM-4
D40-4 D40-4S D50-4 D50-4S D60-4 D60-6S D80-6 D80-2S D100-6 D100-6S D125-6 D150-8 D175-2	VM-3

Information contained in this publication may be considered confidential.
Discretion is recommended when distributing.
Materials and specifications are subject to change without notice.
CAT, CATERPILLAR, their respective logos, “Caterpillar Yellow” and the POWER EDGE trade dress, as well as corporate and product identity used herein, are trademarks of Caterpillar and may not be used without permission.

Market: N. America

LEHE4004-02 (06-07)

www.cat-electricpower.com

© 2007 Caterpillar
All Rights Reserved.
Printed in U.S.A.



Cat® PL444 4G LTE Radio (Model: PL444 NA) Telematics Hardware

Product Description

The Caterpillar PL444 system is a Telematics product that is designed to record and store data from multiple datalinks (CAN J1939, Modbus RS485) present on higher level systems, then transmit the data offboard via wireless communications (cellular) to back office systems for end customer use.

Features

Design Specifications:

- 4G LTE Category 4 Radio
- GNSS signal tracking
- CAN datalink communication
- Modbus datalink communication
- Durable IP66/67-rated enclosure

Radio Connections / Pinout

	A	B	C	D	E	F	G	K	L	M
1	CAN_H	CAN_L	Not used	Not used	Not used	Not used	Not used	Not used	KSW	Batt+
2	Not used	Not used	Not used	Not used	Not used	Not used	Not used	Wireless Disable	Not used	Batt-
3	RS485 RTN	Not used	Not used	Not used	Not used	Not used	LSD1	Not used	Not used	Not used
4	RS485_A	RS485_B	Not used	Not used	Not used	Not used	Not used	Not used	Not used	Not used

CAN_H: CAN High
CAN_L: CAN Low
KSW: Keyswitch (Ignition) – Wakes the device up when tied to Batt+ voltage
Batt+: 12/24V Input
Batt-: Ground/Return
Wireless Disable: When pulled to ground, disables all RF transmissions (Cellular)
LSD1/2: Low Side Drivers 1 and 2. Connects a load with a voltage source, to ground when enabled, completing the circuit
RS485 RTN: RS-485 Shield
RS485A/B: RS-485 Modbus connections

Radio Dimensions

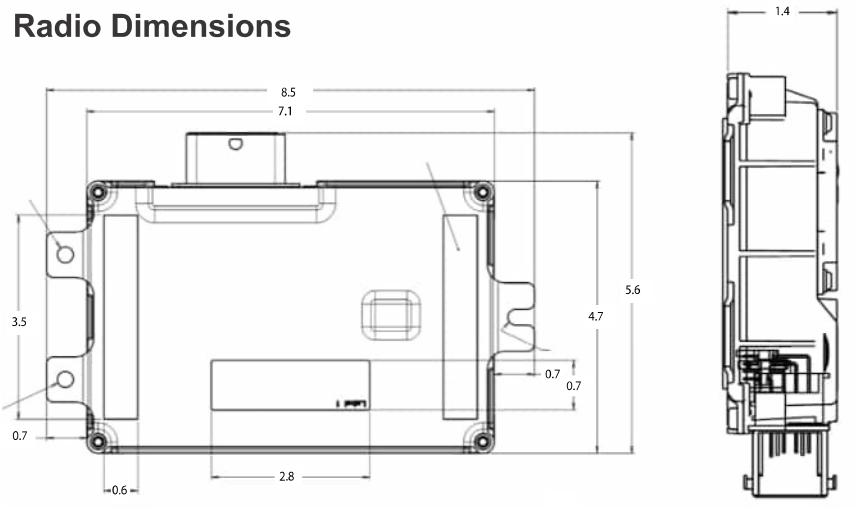

*All dimensions are in inches.

Technical Specifications

Input Voltage
Voltage Range ..... 9 to 32V DC
Protection ..... Reverse polarity

Current Consumption
Idle Current (non-transmitting) ..... < 300 mA
Peak Current ..... < 6A
Sleep Current ..... <3 mA

Physical Specifications
Enclosure Material ..... Plastic (PBT+ASA GF30 FR)
Aluminum (AlMg2.5 / H22; H23)
Dimensions (in) ..... 8.5 x 5.6 x 1.4
Weight ..... 0.45 kg
Interface Connectors ..... 48 pin Molex

Environment
Operating/Storage Temp ..... -40°C to +85°C
Ingress Protection IP66/67
Humidity ..... SAE J1455
Vibration ..... 9.8 Grms random (24-2000 Hz), up to 0.5 g^2/Hz

Regulatory Compliance
FCC, IC, CE RED, EN/UL/CSA 62368-1, RoHS, WEEE, REACH

LEDs
Orange — GNSS (Solid: GNSS Fix, 1Hz: Searching/no lock, Off: Fault)
Blue — Datalink (Flashing: Activity on J1939 or Modbus Off: Fault or No Connection)
Yellow — Cellular (Solid: Data connection established, Flashing: Searching for signal, Off: Modem off or Fault)
White — Bluetooth® (Solid: Connection established, Flashing: Advertising mode, Off: Bluetooth off or Fault)

Secure Key Injection
Security ..... Unique and cryptographic identity

Communications
Datalink J1939/CAN
Datalink ..... Modbus (RS-485)
Wireless ..... 4G LTE with 2G/3G fallback
Wireless ..... Bluetooth®/BLE 5.0

I/O
Low Side Drivers (300 mA max) 2
Switch to Ground 1
Keyswitch 1

Positioning (GNSS)
Signal Tracking ..... GPS/Galileo/GLONASS/BeiDou
Antenna ..... Internal

Cellular Communications

LTE Bands/Frequencies

Band	Frequencies (Uplink / Downlink) (MHz)
2	1850-1910 / 1930-1990
4	1710-1755 / 2110-2155
5	824-849 / 869-894
7	2500-2570 / 2620-2690
12/17	699-716 / 729-746
13	777-787 / 746-756

3G (UMTS) Bands/Frequencies

Band	Frequencies (Uplink / Downlink) (MHz)
2	1850-1910 / 1930-1990
4	1710-1755 / 2110-2155
5	824-849 / 869-894

2G (GSM) Bands/Frequencies

Band	Frequencies (Uplink / Downlink) (MHz)
2	1850-1910 / 1930-1990
5	824-849 / 869-894

Antennas ..... 2x internal (Primary + Diversity) to support 2x2 MIMO
SIM ..... eUICC chip
Operating Temperature ..... -30°C to +70°C

Bluetooth® Communications
Frequencies ..... 2402 – 2480 MHz
Version ..... BLE 5.0
Antenna ..... internal

LET'S DO THE WORK.™

www.cat.com/electricpower

©2021 Caterpillar
All rights reserved.
Materials and specifications are subject to change without notice.
The International System of Units (SI) is used in this publication.
CAT, CATERPILLAR, LET'S DO THE WORK, their respective logos, "Caterpillar Corporate Yellow" the "Power Edge" and Cat "Modern Hex" trade dress as well as corporate and product identity used herein, are trademarks of Caterpillar and may not be used without permission.

Battery Charger

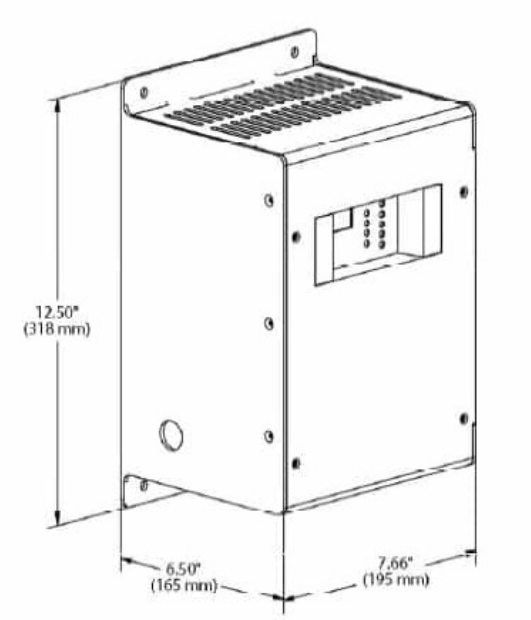

Image Shown may not Reflect Actual Package.

UL 10 Amp

Battery Charger

This battery charger offers accurate, automatic charging of lead-acid and nickel cadmium batteries. The output voltage automatically adjusts to changing input, load, battery and ambient conditions. This prevents battery over-charging and consequent loss of battery electrolyte.

Standard features include AC line compensation, precision voltage regulation, current limiting, automatic 2-rate charging, voltmeter and ammeter, temperature compensation and UL Listing.

The user interface is easy to understand with digital metering, NFPA 110 alarms and a battery fault alarm.

Features

- Electronically current limited at 105% of rated output
- Alarm system
- Digital display
- Lightning and voltage transient protection
- Protection of connected equipment against load dump protection
- Constant voltage, current limited, 4-rate automatic equalization
- IP 20 housing
- Temperature compensation
- On board temperature sensor with remote port
- Auto AC line compensation
- Output regulated by sensed battery voltage

Standards

- C-UL listed to UL 1236
- NFPA 70, NFPA 110
- CSA 22.2 No 107 certified
- CE DOC to EN 60335
- IBC Seismic Certification

Battery Charger

Specifications

Input supply	110 – 120 V 208 – 240 V
AC and DC fuses	2 input and 2 output)
Output voltage	24V
Output amps	10
Frequency	50 / 60 Hz
Operating temperature	-20°C (-4°F) to +60°C (140°F)
Housing constructed of rustproof anodized Aluminum	

Dimensions			
Width	Depth	Height	Weight
195 mm (7.66 in)	165 mm (6.5 in)	318 mm (12.5 in)	10.4 kg (23 lb)

NFPA 110 alarm package as follows:

- AC on Green led (indication)
- AC fail Red led and form C contact (2A)
- Float mode LED
- Fast charge LED
- Temp comp active LED
- Low battery volts Red led and Form C conta
- High Battery Volts Red led and Form C conta
- Charger fail Red led and Form C conta
- Battery fault Red led and Form C conta
- Battery disconnected
- Battery polarity reversed
- Mismatched charger battery voltage
- Open or high resistance charger to battery connection
- Open battery cell or excessive internal resistance

Feature Codes:

BTC1024 BTC1028 BTC1035 BTC1025 BTC1032

Information contained in this publication may be considered confidential. Discretion is recommended when distributing.
Materials and specifications are subject to change without notice.

CAT, CATERPILLAR, LET'S DO THE WORK, their respective logos, "Caterpillar Yellow," the "Power Edge" and Cat "Modern Hex" trade dress as well as corporate and product identity used herein, are trademarks of Caterpillar and may not be used without permission.

©2019 Caterpillar
All rights reserved.

Cat® Batteries



Cat Batteries – Greater Starting Power – Lower Maintenance – Longer Life

Cat Premium High Output (PHO) batteries are used in all Caterpillar Machines and Engine Gen-Sets. They are designed to meet stringent Caterpillar design specifications, which provide industry leading cold cranking amp (CCA) capability and maximum vibration resistance.

Maintenance Free or low maintenance designs are available in wet and dry configurations.

General Service Line batteries are available in Maintenance Free or low maintenance designs and in wet or dry configurations. Wide selections of BCI group sizes are available for automotive, light truck, bus, industrial, agricultural, marine, recreational and valve regulated (VRLA-AGM & Gel) applications.

Caterpillar. The difference counts.™

Cat Dealers define world – class product support. We offer you the right parts and service solutions, when and where you need them.

The Cat Dealer network of highly trained experts keeps your entire fleet up and running to maximize your equipment investments.

CATERPILLAR®

World's Toughest Batteries



Premium High Output – Maximum Vibration Resistance

- Vibration Resistance...five times the Industry Standard
- Exclusive "flat top" BCI group 4D & 8D batteries are Maintenance Free and have the industries highest cold cranking amps (CCA)
- Popular BCI group 31 Maintenance Free batteries with industry leading cold cranking amps...up to 1000 (CCA), for electric power, machine or on-highway truck and bus applications. Deep cycle models available for truck, marine or recreational usage

Specifications for Cat Premium High Output Batteries – Available Worldwide

									BCI Overall Dimensions			Nominal Weight	
BCI Group Size	Part No.	Cold Cranking Amps"	Reserve Capacity Minutes'	Volts	Amp Hr. Capacity @ 20 Hrs.	Construction	Add Water Maintenance Check Hours	Length In (mm)	Width In (mm)	Height In (mm)	Wet Lb (kg)	Dry Lb (kg)	Nominal Acid to Fill Qt (liter)
8D	153-5720	1500	465	12	210	C	MF	20.47 (520)	10.8 (275)	9.76 (248)	132 (60)	–	–
8D	101-4000	1400	400	12	190	LAC+	1000	20.7 (526.5)	10.96 (278)	9.76 (248)	132 (60)	86 (39)	18.0 (17.0)
4D	153-5710	1400	425	12	200	C	MF	20.47 (520)	8.58 (218)	9.76 (248)	119 (54)	–	–
4D	153-5700	1125	305	12	145	C	MF	20.47 (520)	8.58 (218)	9.76 (248)	101 (46)	–	–
4D	9X-9730	1300	400	12	190	LAC+	1000	20.75 (527)	8.58 (218)	9.76 (248)	119 (54)	81 (37)	14.8 (14.0)
4D	9X-9720	1000	275	12	140	LAC+	1000	20.75 (527)	8.58 (218)	9.76 (248)	101 (46)	59 (27)	15.9 (15.0)
31	175-4390	1000	180	12	90	C/S	MFA	12.9 (328.4)	6.74 (171.2)	9.29 (236)	60 (27)	–	–
31	175-4370	825	190	12	100	C/S**	MFA	12.9 (328.4)	6.74 (171.2)	9.29 (236)	60 (27)	–	–
31	175-4360	710	185	12	100	C/S***	MFA	12.9 (328.4)	6.74 (171.2)	9.29 (236)	60 (27)	–	–
31	**250-0480**	710	185	12	100	C/SDT***	MF	12.9 (328.4)	6.74 (171.2)	9.29 (236)	60 (27)	–	–
(2) 31	115-2422	1000	170	12	90	C SAE	MFA	12.9 (328.4)	6.74 (171.2)	9.46 (240.3)	60 (27)	–	–
31	115-2421	950	170	12	90	C SAE +	MFA	12.9 (328.4)	6.74 (171.2)	9.46 (240.3)	60 (27)	44 (20)	6.6 (6.2)
31	9X-3404	950	165	12	100	C SAE	MF	13 (330.2)	6.77 (172)	9.46 (240.3)	58 (26)	–	–
31	3T-5760	750	165	12	100	C SAE	MF	13 (330.2)	6.77 (172)	9.46 (240.3)	55 (25)	–	–
24	153-5656	650	110	12	52	SC	MF	10.98 (278.9)	6.85 (174)	9.0 (229.1)	39 (18)	–	–
65	230-6368	880	140	12	80	SC	MF	11.9 (303.4)	7.5 (190.8)	7.5 (191.4)	45.5 (21)	–	–
74	153-5660	650	110	12	52	SC*	MF	10.98 (278.9)	7.0 (178.2)	8.15 (206.9)	39 (18)	–	–
58	175-4280	500	70	12	35	SC	MF	9.96 (253.1)	7.2 (182.5)	6.9 (176)	31 (14)	–	–
2	153-5690	765	210	6	90	LAC+	1000	10.24 (260)	6.8 (173)	8.72 (221.6)	37 (17)	22 (10)	4.8 (4.5)

Construction Notes:
LAC = Low Maintenance, Hybrid Construction
C = Calcium Lead Alloy Grid Design
MF = Maintenance Free
MFA = Maintenance Free with Accessible Vent Caps
S = Stud Terminals
+ = Shipped Dry Only
* = Side Terminals
** = Starting and Deep Cycle Battery
*** = Deep Cycle and Starting Battery
" = For 30 seconds at 0° F (-18° C)
' = Minimum of 25 amp output at 80° F (27° C)
SAE = Uses SAE Posts
SDT = Dual, Top mounted Terminals, Stud and SAE Post, Marine Deep Cycle/Starting Battery
SC = Silver (Ag) Calcium Alloy Grids for resistance to high underhood temperatures

Rugged Design – Built Tough – Reliable Starting

- Positive and Negative plates are anchored to container bottom and locked at the top of cell element for maximum vibration resistance.
- Heavy-duty forged terminal post bushings provide maximum strength and resistance to acid seepage.
- Hefty full-frame grids, no sharp edges, optimum acid/paste combination provides better charge acceptance after deep discharge.
- Manifold vented cover with built-in Flame Arrestor…a safety feature that directs corrosive gases away from the battery and hold-downs.
- Thick, robust container resists rugged treatment typical of heavy-duty commercial use. Embossed part number & descriptors for easy serviceability.

Cat Batteries

Heavy-duty Forged Terminal Post Bushings

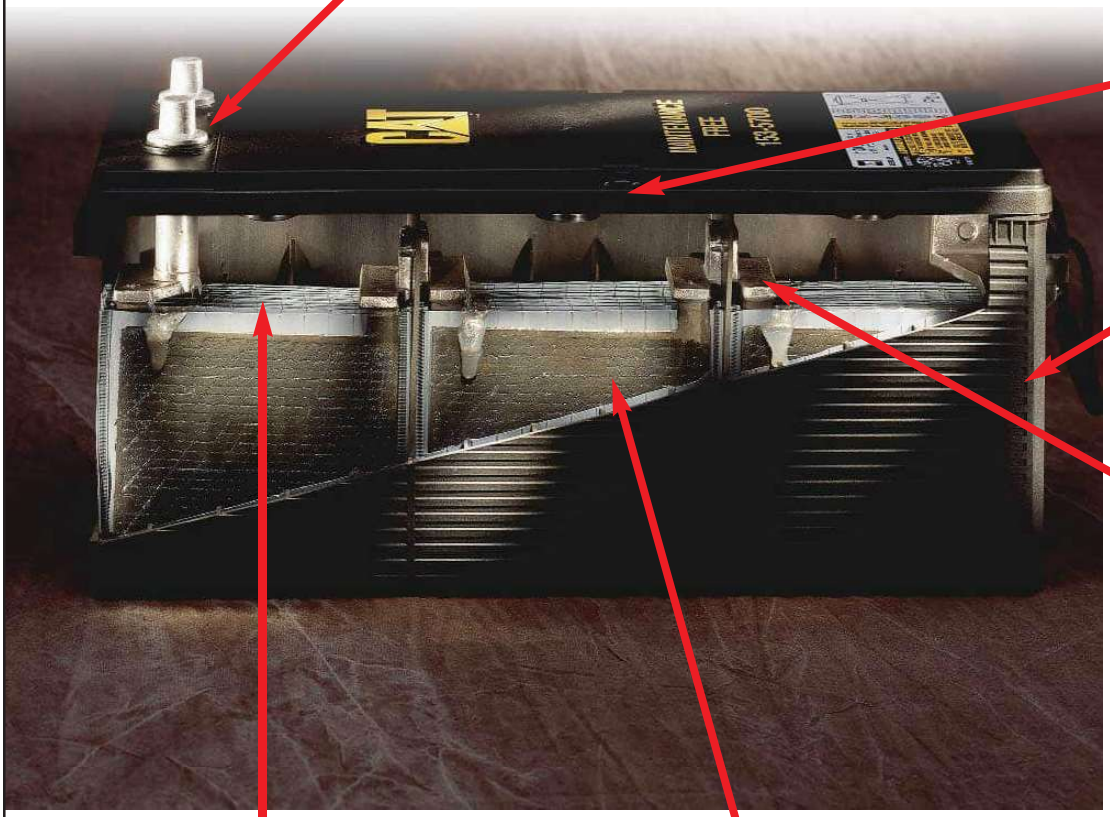

Robust Components = Long Life + Reliable Starts

- Heavy-duty forged terminal post bushings provide maximum strength and resistance to acid seepage that causes corrosion and black posts. Thicker internal terminal posts provide lower electrical resistance and higher cold cranking amp output.
- Rugged microporous polyethylene envelope separators protect against “shorts” and vibration damage. Deep Cycle batteries utilize double insulated Glass mat separators for longer cycling life.
- Maintenance Free batteries utilize calcium lead alloy on both positive and negative plates that reduces gassing and water consumption. Automotive batteries have Silver (Ag) Calcium Alloy Grids for resistance to high underhood temperatures.
- Heavy-duty, full frame battery grids with no sharp edges. An optimum acid/paste combination provides better charge acceptance after a deep discharge.
- Positive and Negative plates are anchored to the container bottom and the cell element is locked at the top for maximum vibration resistance. Straps are thicker, heavier and cast (not welded) into the plates.
- Manifold vented cover with built-in Flame Arrestor…a safety feature that directs corrosive gases away from the battery and hold-downs.
- Robust reinforced case provides extra strength in all temperature extremes. Brickwork design on sides reduces chance of punctures and case flexing. Embossed part number and descriptors for easy serviceability.

CAT, CATERPILLAR, their respective logos and “Caterpillar Yellow,” as well as corporate and product identity used herein, are trademarks of Caterpillar and may not be used without permission.

For more information, see us today or visit our web site at www.cat.com

Caterpillar. The difference counts.™

CATERPILLAR®

PEHJ0073-01 Printed in the U.S.A.
© 2005 Caterpillar All Rights Reserved

Cat® DEO™

Diesel Engine Oil for North America (Canada, Mexico, United States).

SAE 15W-40, SAE 10W-30



Recommended Use

- Cat earthmoving, commercial, marine* and on-highway truck diesel engines
- Low-emission diesel engines including Cat engines with ACERT® Technology
- Heavy-duty diesel engines made by other manufacturers that recommend API CI-4 PLUS, CH-4 or CG-4 category oil (See "Typical Characteristics" on page 2 for more information)
- Automotive gasoline engines that require API SL category oils

* Excluding 3600, C280, 3126 and 3116 MUI Marine and MaK diesel engines. The 3116 and 3126 MUI Marine diesel engines with closed crankcase ventilation systems should use Cat SAEO™.

Discover the Difference

Cat DEO is developed, tested and approved by Caterpillar to meet the same high standards as all Genuine Cat Parts.

Factory-Fill—Used as standard factory-fill for Cat machines.

Increased Engine Life—Resists oxidation and prevents build-up of deposits on pistons and rings.

Longer Intervals—Extends oil drain intervals while providing excellent engine protection and performance when used in conjunction with our S•O•S℠ Services oil analysis program.

Proven Performance—Tested thoroughly in Cat diesel engines including Cat engines with ACERT Technology to ensure excellent engine life and performance.

Long-Lasting Protection—Improved soot control and enhanced shear stability enable oil to maintain proper viscosity for longer operating periods in Cat engines with ACERT Technology, especially those equipped with HEUI systems.

Caterpillar. The difference counts.™

Cat Dealers define world-class product support. We offer you the right parts and service solutions, when and where you need them.

The Cat Dealer network of highly trained experts keeps your entire fleet up and running to maximize your equipment investment.

CATERPILLAR®

Cat DEO

Cat DEO Performance

Performance Requirements	Test	Commercial ECF-1	Cat DEO
Cat 3406E Endurance Test	Cat Proprietary		
Cat C13 ACERT Endurance Test	Cat Proprietary		
Cat 3500 Series Test	Cat Proprietary		
Cat C13 ACERT Wheel Loader Test	Cat Proprietary		
Improved Soot-Viscosity & Shear Control			
High Temperature Shear			
Elastomer Compatibility			
Piston ring & Cylinder liner wear			
Valve train wear, sludge, oil filter plugging			
Aeration Control			
Bearing Corrosion			
Cam roller follower pin wear			
Copper, lead and tin erosion			
Foaming Control			
Viscosity Shear loss			
Viscosity Increase from soot			
Oxidation			
Piston deposits and oil control			

Tested Beyond Industry Standards

In addition to the tests required for the ECF-1 classification, Cat DEO undergoes four proprietary multi-cylinder endurance tests, a variety of quality assurance tests and thousands of hours of field service. Only when it has passed all these tests can it be approved by Caterpillar. The chart to the left indicates the differences between ECF-1 standards and the proprietary standards of Caterpillar.

Typical Characteristics*

SAE Viscosity Grade	15W-40	10W-30
API Service Classification		
Diesel	CI-4 PLUS, CI-4, CH-4, CG-4,CF-4/CF	CI-4, CH-4, CG-4, CF-4/CF
Gasoline	SL	SL
OEM Performance Level:		
Caterpillar	ECF-1	ECF-1
Volvo	VDS-3	VDS-2
DDC	93K214	
Cummins	CES 20071/76/78	CES 20071/76
Mack	EO-NPP '03, EO-M Plus	EO-M Plus
Flash Point, °C (ASTM D92)	224	227
Pour Point, °C (ASTM D97)	-30	-33
Viscosity		
cSt @ 40°C (ASTM D445)	120.5	76
cSt @ 100°C (ASTM D445)	15.5	11.5
Viscosity Index (ASTM D2270)	135	145
Sulfated Ash, % wt. (ASTM D874)	1.3	1.3
TBN (ASTM D2896)	11.3	11.3
Zinc, % wt. (ASTM D4951)	0.146	0.146
Gravity @ 16°C		
API (ASTM D287)	29.3	31.8
Specific	0.880	0.867

*The values shown are typical values and should not be used as quality control parameters to either accept or reject product. Specifications are subject to change without notice.

Other Recommended Oils

Cat DEO SYN™ 5W-40

For engines that must be started in extremely low temperatures down to -30°C(-22°F) consider using Cat DEO SYN 5W-40. This is a full synthetic diesel engine oil.

S•O•S Services for early problem detection

Protect your investment with Cat S•O•S oil analysis, the ultimate detection and diagnostic tool for your equipment. S•O•S helps you detect potential problems before they can lead to major failures and costly, unscheduled downtime.

Cat Filters: Complete protection for your machine

Combine Cat Fluids with Cat Filters for the highest level of contamination control and protection for your machine. We recommend Cat Filters for all Cat machine applications.

Health and Safety

Under normal conditions of intended use, this product does not pose a risk to health. Excessive exposure may result in eye, skin or respiratory irritation. Always observe good hygiene measures. Read and understand the Material Safety Data Sheet (MSDS) before using this product. For a copy of the MSDS, visit us on the web at www.catmsds.com.

CATERPILLAR®

PEHJ0059-02 www.cat.com © 2006 Caterpillar All Rights Reserved Printed in USA

Cat® ELC

Extended Life Coolant for Caterpillar and original equipment manufacturer (OEM) diesel and gasoline engines

50/50 Premix



Recommended Use

Cat ELC meets or exceeds the requirements of the following specifications and guidelines:

- Cat EC-1
- TMC RP-329
- TMC RP-338
- ASTM D-3306
- ASTM D-6210
- SAE J1034

Cat ELC also meets the performance requirements of Cummins, Detroit Diesel, International, Mack and Volvo.

Discover the Difference

Cat ELC is developed, tested and approved by Caterpillar to meet the same high standards as all Genuine Cat Parts.

- Factory-Fill—Used as standard factory-fill for all Cat machine cooling systems.
- Lower Maintenance Costs—Reduces engine coolant and additive costs by as much as 500% compared to conventional coolants. It eliminates the need for supplemental coolant additives, extends coolant change-out intervals and reduces disposal requirements.
- Advanced Metal Protection—Incorporates an advanced formula technology with organic acid additive corrosion inhibitors, such as a combination of mono and dicarboxylates for maximum protection of copper, solder, brass, steel, cast iron and aluminum.

CATERPILLAR®

Cat ELC for Maximum Coolant Life

Cat DEAC™

3000 Hour Life or
333,000 km (200,000 miles)
Cat Supplemental Coolant Additives Every 250 Hours
or 25,000 km (15,000 miles)

Cat ELC (Machines and Commercial Engines)

Cat Extender Every 6000 Hours*

12,000 Hour Life or 6 Years**
(whichever comes first)

Cat ELC (Truck Engines)

Cat Extender Every 500,000 km (300,000 miles)* **1,000,000 km (600,000 miles) or 6 Years****
(whichever comes first)

* Or one-half of the coolant service life.

** These coolant change intervals are only possible with annual S•O•S Level 2 coolant sampling and analysis.

Typical Characteristics*

Color	Strawberry Red
Boiling protection with 15 psi (1 bar) radiator cap	
50% Cat ELC/50% water	129°C (265°F)
60% Cat ELC/40% water (ELC concentrate added)	132°C (270°F)
Freezing protection	
50% Cat ELC/50% water	-37°C (-34°F)
60% Cat ELC/40% water (ELC concentrate added)	-52°C (-62°F)
Nitrite (50% solution)	500 ppm
Molybdate (50% solution)	530 ppm

*The values shown are typical values and should not be used as quality control parameters to either accept or reject product. Specifications are subject to change without notice.

S•O•S℠ services for early problem detection

Protect your investment with Cat S•O•S Coolant Analysis, the ultimate detection and diagnostic tool for your equipment. We recommend S•O•S Level 1 Coolant Analysis according to the engine's Operation and Maintenance Manual, and Level 2 Coolant Analysis annually for all your Cat equipment.

Cat ELC Extender for Longer Life

- Exceeds Cat EC-1 performance requirements
- Protects against cylinder liner/block pitting and cavitation erosion
- Should be added at 500,000 km (300,000 miles) for Cat powered on-highway trucks and 6,000 hours for commercial engines
- Extender is only necessary once during the life of the coolant
- Ensures Cat ELC performance to 1,000,000 km (600,000 miles) or 12,000 hours

Cat ELC Extender and Flush Intervals

Cat ELC Extender should be added after 6,000 hours or 300,000 miles (500,000 km) of operation, and the system should be drained and flushed with clean water after 12,000 hours or 600,000 miles (1,000,000 km). No cleaning agents are needed. If S•O•S℠ Services are used regularly, safe operation with Cat ELC may extend beyond 12,000 hours.

Health and Safety

Under normal conditions of intended use, this product does not pose a risk to health. Excessive exposure may result in eye, skin or respiratory irritation. Always observe good hygiene measures. Read and understand the Material Safety Data Sheet (MSDS) before using this product. For a copy of the MSDS, visit us on the web at www.catmsds.com.

CAT® DEALERS DEFINE WORLD-CLASS PRODUCT SUPPORT.

We offer you the right parts and service solutions, when and where you need them.

The Cat Dealer network of highly trained experts can help you maximize your equipment investment.



PEHJ0067-02
www.cat.com

© 2007 Caterpillar • All Rights Reserved • Printed in USA
CAT, CATERPILLAR, their respective logos, "Caterpillar Yellow" and the POWER EDGE trade dress, as well as corporate and product identity used herein, are trademarks of Caterpillar and may not be used without permission.

CATERPILLAR®
TODAY'S WORK. TOMORROW'S WORLD.™

GENERATOR DATA

NOVEMBER 12, 2024

For Help Desk Phone Numbers Click here

Selected Model

Engine: C15	**Generator Frame:** LC7034J	**Genset Rating (kW):** 500.0	**Line Voltage:** 480
Fuel: Diesel	**Generator Arrangement:** 4183887	**Genset Rating (kVA):** 625.0	**Phase Voltage:** 277
Frequency: 60	**Excitation Type:** Permanent Magnet	**Pwr. Factor:** 0.8	**Rated Current:** 751.8
Duty: STANDBY	**Connection:** SERIES STAR	**Application:** EPG	**Status:** Current

Version: 41205 /40001 /41431 /8568

Spec Information

Generator Specification

Frame: LC7034J **Type:** LC **No. of Bearings:** 1
Winding Type: RANDOM WOUND **Flywheel:** 14.0
Connection: SERIES STAR **Housing:** 1
Phases: 3 **No. of Leads:** 12
Poles: 4 **Wires per Lead:** 2
Sync Speed: 1800 **Generator Pitch:** 0.6667

Generator Efficiency

Per Unit Load	kW	Efficiency %
0.25	125.0	91.0
0.5	250.0	93.5
0.75	375.0	94.4
1.0	500.0	94.4

Reactances	Per Unit	Ohms
SUBTRANSIENT - DIRECT AXIS X''_d	0.1028	0.0379
SUBTRANSIENT - QUADRATURE AXIS X''_q	0.1183	0.0436
TRANSIENT - SATURATED X'_d	0.1289	0.0475
SYNCHRONOUS - DIRECT AXIS X_d	2.6302	0.9696
SYNCHRONOUS - QUADRATURE AXIS X_q	1.5788	0.5820
NEGATIVE SEQUENCE X_2	0.1107	0.0408
ZERO SEQUENCE X_0	0.0076	0.0028

Time Constants	Seconds
OPEN CIRCUIT TRANSIENT - DIRECT AXIS T'_{d0}	2.0390
SHORT CIRCUIT TRANSIENT - DIRECT AXIS T'_d	0.1000
OPEN CIRCUIT SUBSTRANSIENT - DIRECT AXIS T''_{d0}	0.0130
SHORT CIRCUIT SUBSTRANSIENT - DIRECT AXIS T''_d	0.0100
OPEN CIRCUIT SUBSTRANSIENT - QUADRATURE AXIS T''_{q0}	0.1330
SHORT CIRCUIT SUBSTRANSIENT - QUADRATURE AXIS T''_q	0.0100
EXCITER TIME CONSTANT T_e	0.0300
ARMATURE SHORT CIRCUIT T_a	0.0150

Short Circuit Ratio: 0.45	Stator Resistance = 0.0089 Ohms	Field Resistance = 0.357 Ohms

Voltage Regulation

Voltage level adjustment: +/-	5.0%
Voltage regulation, steady state: +/-	0.5%
Voltage regulation with 3% speed change: +/-	0.5%
Waveform deviation line - line, no load: less than	2.0%
Telephone influence factor: less than	50

Generator Excitation

	No Load	Full Load, (rated) pf	
		Series	Parallel
Excitation voltage:	9.96 Volts	39.15 Volts	Volts
Excitation current	0.83 Amps	2.68 Amps	Amps

Selected Model

Engine: C15	**Generator Frame:** LC7034J	**Genset Rating (kW):** 500.0	**Line Voltage:** 480
Fuel: Diesel	**Generator Arrangement:** 4183887	**Genset Rating (kVA):** 625.0	**Phase Voltage:** 277
Frequency: 60	**Excitation Type:** Permanent Magnet	**Pwr. Factor:** 0.8	**Rated Current:** 751.8
Duty: STANDBY	**Connection:** SERIES STAR	**Application:** EPG	**Status:** Current

Version: 41205 /40001 /41431 /8568

Generator Mechanical Information

Center of Gravity

Dimension X	-643.0 mm	-25.3 IN.
Dimension Y	0.0 mm	0.0 IN.
Dimension Z	0.0 mm	0.0 IN.

- "X" is measured from driven end of generator and parallel to rotor. Towards engine fan is positive. See General Information for details
- "Y" is measured vertically from rotor center line. Up is positive.
- "Z" is measured to left and right of rotor center line. To the right is positive.

Generator WT = 1550 kg * Rotor WT = 579 kg * Stator WT = 971 kg
3,417 LB 1,276 LB 2,141 LB

Rotor Balance = 0.0508 mm deflection PTP

Overspeed Capacity = 125% of synchronous speed

Generator Torsional Data

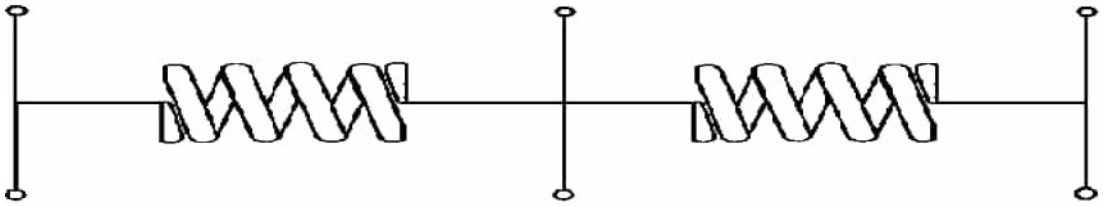

J1 = Coupling and Fan | **J2 = Rotor** | **J3 = Exciter End**

TOTAL J = J1 + J2 + J3

K1 = Shaft Stiffness between J1 + J2 (Diameter 1)			**K2 = Shaft Stiffness between J2 + J3 (Diameter 2)**		
J1	**K1**	**Min Shaft Dia 1**	**K2**	**Min Shaft Dia 2**	**J3**
7.6 LB IN. s^2	75.2 MLB IN./rad	5.7 IN.	73.3 MLB IN./rad	5.5 IN.	3.3 LB IN. s^2
0.86 N m s^2	8.5 MN m/rad	145.0 mm	8.28 MN m/rad	140.0 mm	0.37 N m s^2

Total J

81.0 LB IN. s^2

9.15 N m s^2

Selected Model

Engine: C15	**Generator Frame:** LC7034J	**Genset Rating (kW):** 500.0	**Line Voltage:** 480
Fuel: Diesel	**Generator Arrangement:** 4183887	**Genset Rating (kVA):** 625.0	**Phase Voltage:** 277
Frequency: 60	**Excitation Type:** Permanent Magnet	**Pwr. Factor:** 0.8	**Rated Current:** 751.8
Duty: STANDBY	**Connection:** SERIES STAR	**Application:** EPG	**Status:** Current

Version: 41205 /40001 /41431 /8568

Generator Cooling Requirements - Temperature - Insulation Data

Cooling Requirements:		**Temperature Data: (Ambient 40 ^{0}C)**	
Heat Dissipated:	29.7 kW	**Stator Rise:**	105.0 ^{0}C
Air Flow:	72.0 m^3/min	**Rotor Rise:**	105.0 ^{0}C

Insulation Class: H

Insulation Reg. as shipped: 100.0 MΩ minimum at 40 ^{0}C

Thermal Limits of Generator

Frequency:	60 Hz
Line to Line Voltage:	480 Volts
B BR 80/40	704.0 kVA
F BR -105/40	800.0 kVA
H BR - 125/40	880.0 kVA
F PR - 130/40	880.0 kVA
H PR - 150/40	933.0 kVA
H PR27 - 163/27	968.0 kVA

Selected Model

Engine: C15	**Generator Frame:** LC7034J	**Genset Rating (kW):** 500.0	**Line Voltage:** 480
Fuel: Diesel	**Generator Arrangement:** 4183887	**Genset Rating (kVA):** 625.0	**Phase Voltage:** 277
Frequency: 60	**Excitation Type:** Permanent Magnet	**Pwr. Factor:** 0.8	**Rated Current:** 751.8
Duty: STANDBY	**Connection:** SERIES STAR	**Application:** EPG	**Status:** Current

Version: 41205 /40001 /41431 /8568

Starting Capability & Current Decrement
Motor Starting Capability (0.6 pf)

SKVA	Percent Volt Dip
119	2.5
245	5.0
377	7.5
517	10.0
664	12.5
821	15.0
987	17.5
1,163	20.0
1,350	22.5
1,550	25.0
1,764	27.5
1,993	30.0
2,239	32.5
2,504	35.0
2,791	37.5
3,101	40.0

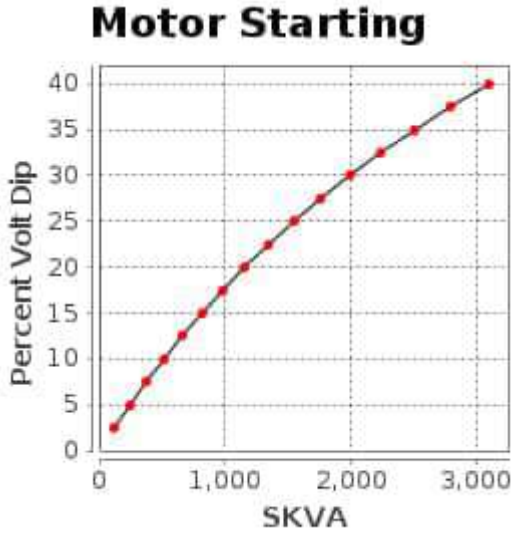

Current Decrement Data

E Time Cycle	AMP
0.0	7,275
1.0	5,267
2.0	4,327
3.0	3,680
4.0	3,161
5.0	2,726
7.5	2,636
10.0	3,186
12.5	3,516
15.0	3,701
20.0	3,575
25.0	3,320
30.0	3,190
35.0	3,146
40.0	3,140
45.0	3,147

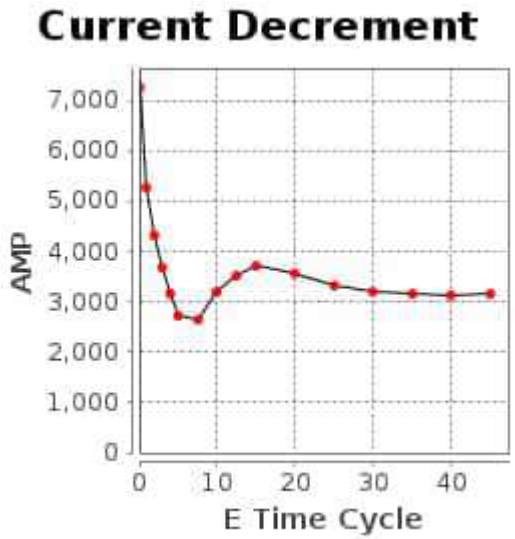

Instantaneous 3 Phase Fault Current: 7275 Amps **Instantaneous Line - Line Fault Current:** 6070 Amps

Instantaneous Line - Neutral Fault Current: 10157 Amps

Selected Model

Engine: C15	**Generator Frame:** LC7034J	**Genset Rating (kW):** 500.0	**Line Voltage:** 480
Fuel: Diesel	**Generator Arrangement:** 4183887	**Genset Rating (kVA):** 625.0	**Phase Voltage:** 277
Frequency: 60	**Excitation Type:** Permanent Magnet	**Pwr. Factor:** 0.8	**Rated Current:** 751.8
Duty: STANDBY	**Connection:** SERIES STAR	**Application:** EPG	**Status:** Current

Version: 41205 /40001 /41431 /8568

Generator Output Characteristic Curves
Open Circuit Curve

Field Current	Line - Line Volt
0.0	0
17.2	288
20.3	336
23.8	384
28.2	432
34.6	480
46.1	528
69.5	576
120.9	624
238.6	672

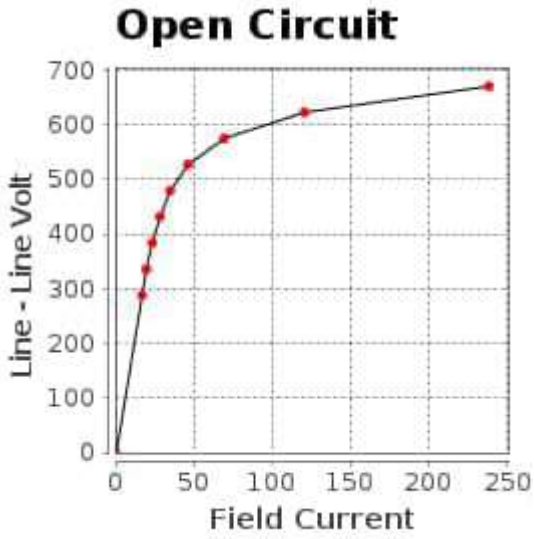

Short Circuit Curve

Field Current	Armature Current
0.0	0
44.8	451
52.3	526
59.8	601
67.3	677
74.7	752
82.2	827
89.7	902
97.1	977
104.6	1,052

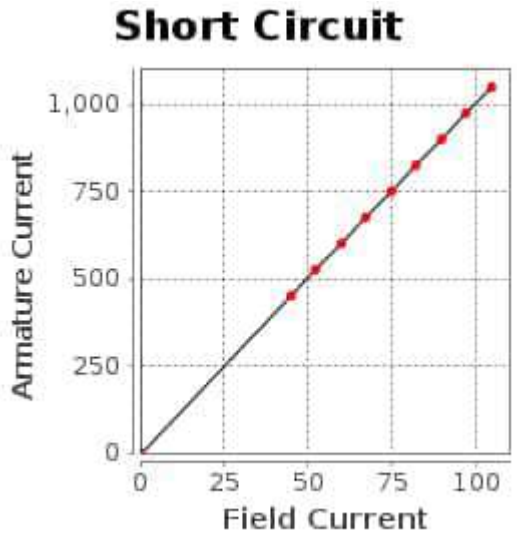

Selected Model

Engine: C15	**Generator Frame:** LC7034J	**Genset Rating (kW):** 500.0	**Line Voltage:** 480
Fuel: Diesel	**Generator Arrangement:** 4183887	**Genset Rating (kVA):** 625.0	**Phase Voltage:** 277
Frequency: 60	**Excitation Type:** Permanent Magnet	**Pwr. Factor:** 0.8	**Rated Current:** 751.8
Duty: STANDBY	**Connection:** SERIES STAR	**Application:** EPG	**Status:** Current

Version: 41205 /40001 /41431 /8568

Generator Output Characteristic Curves
Zero Power Factor Curve

Field Current	Line - Line Volt
74.7	0
91.5	240
94.6	288
98.1	336
102.3	384
108.6	432
119.4	480
141.3	528
189.1	576
298.4	624

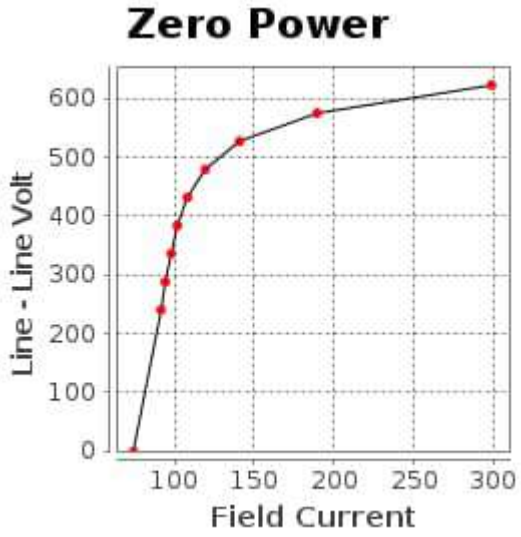

Air Gap Curve

Field Current	Line - Line Volt
0.0	0
17.0	288
19.8	336
22.6	384
25.5	432
28.3	480
31.1	528
34.0	576
36.8	624
39.6	672

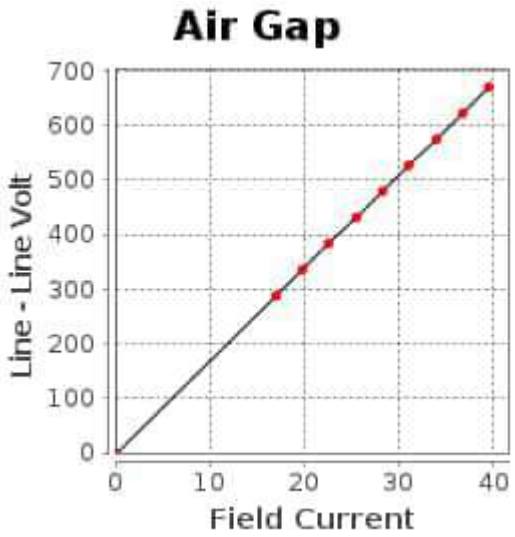

Selected Model

Engine: C15	**Generator Frame:** LC7034J	**Genset Rating (kW):** 500.0	**Line Voltage:** 480
Fuel: Diesel	**Generator Arrangement:** 4183887	**Genset Rating (kVA):** 625.0	**Phase Voltage:** 277
Frequency: 60	**Excitation Type:** Permanent Magnet	**Pwr. Factor:** 0.8	**Rated Current:** 751.8
Duty: STANDBY	**Connection:** SERIES STAR	**Application:** EPG	**Status:** Current

Version: 41205 /40001 /41431 /8568

Reactive Capability Curve

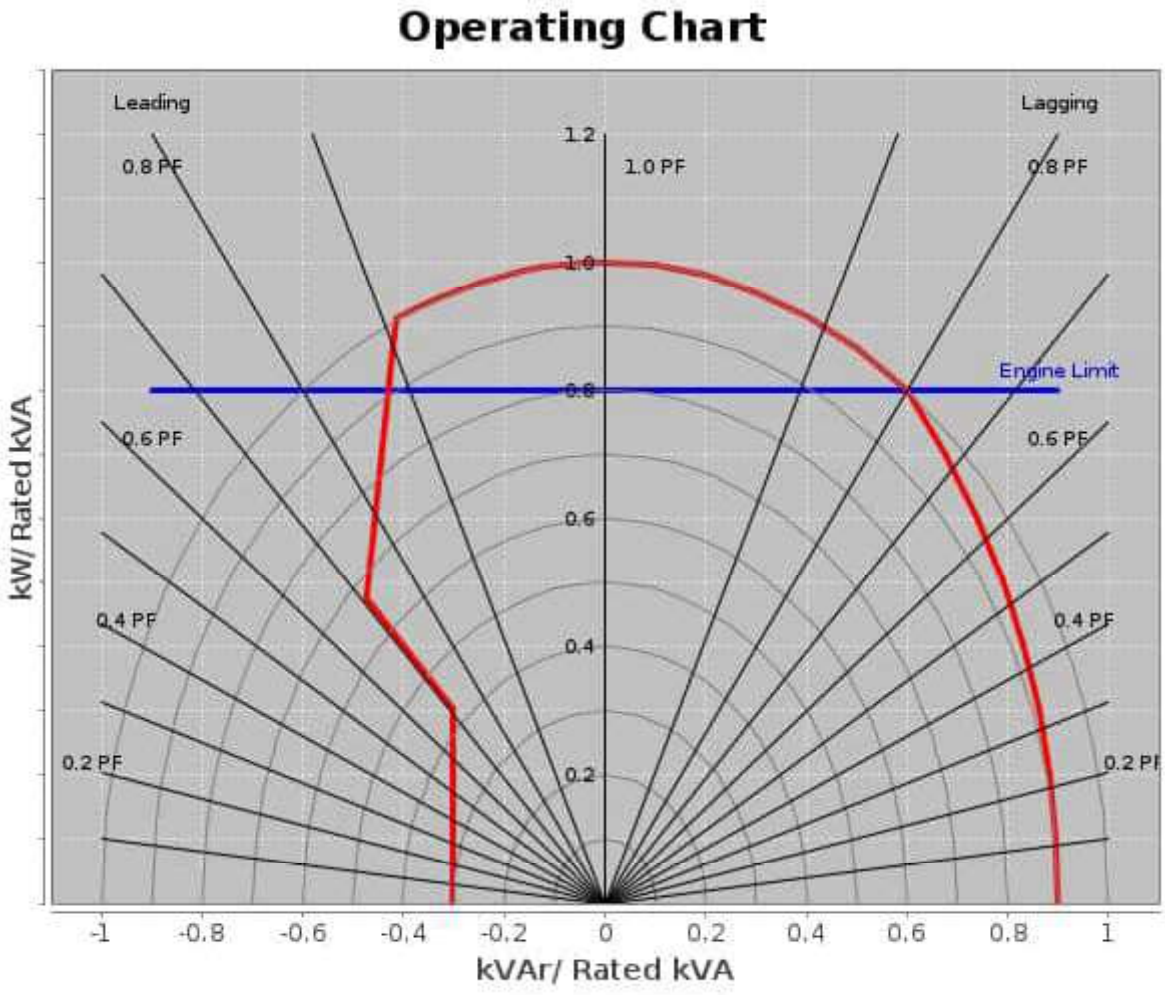

General Information

GENERATOR INFORMATION (DM7900)

---

1. Motor Starting
Motor starting curves are obtained in accordance with IEC60034, and are displayed at 0.6 power factor.

2. Voltage Dip
Prediction of the generator synchronous voltage dip can be made by consulting the plot for the voltage dip value that corresponds to the desired motor starting kVA value.

3. Definitions
A) Generator Keys
Frame: abbreviation of generator frame size
Freq: frequency in hertz.
PP/SB: prime/standby duty respectively
Volts: line - line terminal voltage
kW: rating in electrical kilo watts
Model: engine sales model

B) Generator Temperature Rise
The indicated temperature rises are the IEC/NEMA limits for standby or prime power applications. The quoted rise figures are maximum limits only and are not necessarily indicative of the actual temperature rise of a given machine winding.

C) Centre of Gravity
The specified centre of gravity is for the generator only. For single bearing, and two bearing close coupled generators, the center of gravity is measured from the generator/engine flywheel-housing interface and from the centreline of the rotor Shaft.

For two bearing, standalone generators, the center of gravity is measured from the end of the rotor shaft and from the centerline of the rotor shaft.

D) Generator Current Decrement Curves
The generator current decrement curve indicates the generator armature current arising from a symmetrical three-phase fault at the generator terminals. Generators equipped with AREP or PMG excitation systems will sustain 300% of rated armature current for 10 seconds.

E) Generator Efficiency Curves
The efficiency curve is displayed for the generator only under the given conditions of rating, voltage, frequency and power factor. This is not the overall generating set efficiency curve.

PERFORMANCE DATA[DM8155]

November 12, 2024

Performance Number: DM8155 **Change Level: 06**

SALES MODEL:	C15	**COMBUSTION:**	DIRECT INJECTION
BRAND:	CAT	**ENGINE SPEED (RPM):**	1,800
MACHINE SALES MODEL:		**HERTZ:**	60
ENGINE POWER (BHP):	762	**FAN POWER (HP):**	19.4
GEN POWER WITH FAN (EKW):	500.0	**ADDITIONAL PARASITICS (HP):**	14.2
COMPRESSION RATIO:	16.1	**ASPIRATION:**	TA
RATING LEVEL:	STANDBY	**AFTERCOOLER TYPE:**	ATAAC
PUMP QUANTITY:	1	**AFTERCOOLER CIRCUIT TYPE:**	JW+OC, ATAAC
FUEL TYPE:	DIESEL	**INLET MANIFOLD AIR TEMP (F):**	120
MANIFOLD TYPE:	DRY	**JACKET WATER TEMP (F):**	192.2
GOVERNOR TYPE:	ELEC	**TURBO CONFIGURATION:**	SINGLE
CAMSHAFT TYPE:	STANDARD	**TURBO QUANTITY:**	1
IGNITION TYPE:	CI	**TURBOCHARGER MODEL:**	GTA5518BS-56T-1.58
INJECTOR TYPE:	EUI	**CERTIFICATION YEAR:**	2006
REF EXH STACK DIAMETER (IN):	6	**PISTON SPD @ RATED ENG SPD (FT/MIN):**	2,025.0
MAX OPERATING ALTITUDE (FT):	3,281		

INDUSTRY	SUBINDUSTRY	APPLICATION
ELECTRIC POWER	STANDARD	PACKAGED GENSET
OIL AND GAS	LAND PRODUCTION	PACKAGED GENSET

General Performance Data

GENSET POWER WITH FAN	PERCENT LOAD	ENGINE POWER	BRAKE MEAN EFF PRES (BMEP)	BRAKE SPEC FUEL CONSUMPTN (BSFC)	ISO BRAKE SPEC FUEL CONSUMPTN (BSFC)	VOL FUEL CONSUMPTN (VFC)	ISO VOL FUEL CONSUMPTN (VFC)	ELEC SPEC FUEL CONSUMPTN (ESFC)	ISO ELEC SPEC FUEL CONSUMPTN (ESFC)
EKW	%	BHP	PSI	LB/BHP-HR	LB/BHP-HR	GAL/HR	GAL/HR	LB/EKW-HR	LB/EKW-HR
500.0	100	762	361	0.333	0.330	35.7	35.4	0.507	0.502
450.0	90	683	324	0.348	0.345	33.5	33.2	0.528	0.523
400.0	80	607	288	0.358	0.355	30.6	30.3	0.543	0.538
375.0	75	570	271	0.358	0.355	28.8	28.5	0.545	0.540
350.0	70	534	253	0.356	0.353	26.8	26.5	0.543	0.538
300.0	60	462	219	0.347	0.344	22.6	22.4	0.535	0.530
250.0	50	392	186	0.336	0.333	18.6	18.4	0.527	0.522
200.0	40	323	153	0.339	0.336	15.4	15.3	0.547	0.542
150.0	30	253	120	0.347	0.344	12.4	12.3	0.586	0.580
125.0	25	218	103	0.355	0.352	10.9	10.8	0.619	0.613
100.0	20	182	86	0.368	0.364	9.4	9.4	0.670	0.663
50.0	10	109	52	0.420	0.416	6.5	6.4	0.917	0.908

GENSET POWER WITH FAN	PERCENT LOAD	ENGINE POWER	INLET MFLD PRES	INLET MFLD TEMP	EXH MFLD TEMP	EXH MFLD PRES	ENGINE OUTLET TEMP	COMPRESSOR OUTLET PRES	COMPRESSOR OUTLET TEMP
EKW	%	BHP	IN-HG	DEG F	DEG F	IN-HG	DEG F	IN-HG	DEG F
500.0	100	762	68.2	120.4	1,296.3	46.8	988.0	73	405.8
450.0	90	683	67.0	119.4	1,280.7	45.9	973.8	72	402.2
400.0	80	607	61.6	115.2	1,250.1	42.3	956.6	66	381.3
375.0	75	570	56.4	111.0	1,229.5	38.8	947.8	61	361.0
350.0	70	534	50.1	106.0	1,205.6	34.6	938.3	54	336.1
300.0	60	462	36.6	95.5	1,148.6	25.6	915.7	40	282.1
250.0	50	392	24.0	86.2	1,080.0	17.4	887.9	27	229.6
200.0	40	323	16.9	83.6	1,003.8	13.3	838.1	19	195.0
150.0	30	253	11.3	81.0	910.6	10.2	768.4	13	165.5
125.0	25	218	9.1	79.8	857.1	9.0	725.6	11	152.7
100.0	20	182	7.0	78.6	795.3	8.0	674.7	9	140.6
50.0	10	109	3.3	76.2	639.0	6.1	542.9	5	118.5

General Performance Data (Continued)

GENSET POWER WITH FAN	PERCENT LOAD	ENGINE POWER	WET INLET AIR VOL FLOW RATE	ENGINE OUTLET WET EXH GAS VOL FLOW RATE	WET INLET AIR MASS FLOW RATE	WET EXH GAS MASS FLOW RATE	WET EXH VOL FLOW RATE (32 DEG F AND 29.98 IN HG)	DRY EXH VOL FLOW RATE (32 DEG F AND 29.98 IN HG)
EKW	%	BHP	CFM	CFM	LB/HR	LB/HR	FT3/MIN	FT3/MIN

500.0	100	762	1,347.7	3,869.5	6,001.8	6,255.3	1,314.2	1,190.7
450.0	90	683	1,345.2	3,807.0	5,981.4	6,219.2	1,305.8	1,188.3
400.0	80	607	1,283.7	3,578.0	5,686.7	5,904.2	1,242.2	1,133.6
375.0	75	570	1,219.4	3,368.7	5,381.2	5,585.8	1,176.8	1,074.2
350.0	70	534	1,139.2	3,114.4	5,001.5	5,191.7	1,095.3	999.6
300.0	60	462	965.5	2,567.9	4,183.5	4,344.1	918.0	837.4
250.0	50	392	799.0	2,042.2	3,407.8	3,539.6	745.1	680.1
200.0	40	323	697.8	1,709.3	2,959.9	3,069.2	647.6	593.2
150.0	30	253	615.8	1,417.7	2,601.3	2,689.1	567.6	523.1
125.0	25	218	581.8	1,286.6	2,454.7	2,532.1	533.7	493.8
100.0	20	182	551.1	1,160.5	2,322.2	2,389.2	503.0	467.8
50.0	10	109	497.4	916.4	2,088.6	2,134.4	449.4	423.6

Heat Rejection Data

GENSET POWER WITH FAN	PERCENT LOAD	ENGINE POWER	REJECTION TO JACKET WATER	REJECTION TO ATMOSPHERE	REJECTION TO EXH	EXHAUST RECOVERY TO 350F	FROM OIL COOLER	FROM AFTERCOOLER	WORK ENERGY	LOW HEAT VALUE ENERGY	HIGH HEAT VALUE ENERGY
EKW	%	BHP	BTU/MIN	BTU/MIN	BTU/MIN	BTU/MIN	BTU/MIN	BTU/MIN	BTU/MIN	BTU/MIN	BTU/MIN
500.0	100	762	10,375	5,182	28,039	17,119	4,138	6,860	32,301	77,688	82,757
450.0	90	683	9,686	4,904	27,298	16,583	3,881	6,775	28,958	72,867	77,622
400.0	80	607	8,796	4,826	25,540	15,270	3,549	6,061	25,750	66,626	70,974
375.0	75	570	8,322	4,716	24,127	14,230	3,337	5,388	24,187	62,652	66,740
350.0	70	534	7,911	4,524	22,387	13,011	3,104	4,610	22,642	58,272	62,074
300.0	60	462	7,240	4,038	18,412	10,458	2,621	3,127	19,611	49,217	52,428
250.0	50	392	6,630	3,455	14,380	8,084	2,153	1,957	16,633	40,417	43,054
200.0	40	323	5,924	2,968	11,812	6,328	1,786	1,321	13,687	33,524	35,712
150.0	30	253	5,187	2,459	9,434	4,713	1,435	880	10,732	26,935	28,692
125.0	25	218	4,807	2,196	8,319	3,963	1,264	716	9,239	23,729	25,277
100.0	20	182	4,414	1,924	7,227	3,212	1,093	577	7,727	20,530	21,869
50.0	10	109	3,615	1,370	5,008	1,677	749	353	4,629	14,057	14,974

PERFORMANCE DATA[DM8155]

Altitude Derate Data

STANDARD

ALTITUDE CORRECTED POWER CAPABILITY (BHP)

AMBIENT OPERATING TEMP (F)	30	40	50	60	70	80	90	100	110	120	130	140	NORMAL
ALTITUDE (FT)													
0	762	762	762	762	762	762	762	762	762	762	762	762	762
1,000	762	762	762	762	762	762	762	762	762	762	757	744	762
2,000	762	762	762	762	762	762	762	762	754	741	728	716	762
3,000	762	762	762	762	762	762	752	739	726	713	701	689	762
4,000	762	762	762	762	751	737	724	711	698	686	674	663	759
5,000	762	762	750	736	722	709	696	683	671	660	649	638	735
6,000	751	736	722	708	694	681	669	657	646	634	624	613	712
7,000	722	707	694	680	667	655	643	632	620	610	599	589	689
8,000	693	680	666	653	641	629	618	607	596	586	576	566	666
9,000	666	653	640	628	616	604	593	583	572	563	553	544	644
10,000	639	626	614	602	591	580	570	559	550	540	531	522	623
11,000	614	601	589	578	567	557	546	537	527	518	510	501	602
12,000	588	577	565	554	544	534	524	515	506	497	489	480	582
13,000	564	553	542	532	522	512	503	494	485	477	469	461	562
14,000	541	530	520	510	500	491	482	473	465	457	449	442	542
15,000	518	508	498	488	479	470	462	453	445	438	430	423	523

Cross Reference

Test Spec	Setting	Engine Arrangement	Engineering Model	Engineering Model Version	Start Effective Serial Number	End Effective Serial Number
0K6281	PP5612	2864923	GS282	-	FTE02794	
0K6281	PP5612	2864924	GS282	-	FTE02794	

Performance Parameter Reference

Parameters Reference:DM9600-15

PERFORMANCE DEFINITIONS

PERFORMANCE DEFINITIONS DM9600
APPLICATION:
Engine performance tolerance values below are representative of a typical production engine tested in a calibrated dynamometer test cell at SAE J1995 standard reference conditions. Caterpillar maintains ISO9001:2000 certified quality management systems for engine test Facilities to assure accurate calibration of test equipment. Engine test data is corrected in accordance with SAE J1995. Additional reference material SAE J1228, J1349, ISO 8665, 3046-1:2002E, 3046-3:1989, 1585, 2534, 2288, and 9249 may apply in part or are similar to SAE J1995. Special engine rating request (SERR) test data shall be noted.
PERFORMANCE PARAMETER TOLERANCE FACTORS:
Power +/- 3%
Torque +/- 3%
Exhaust stack temperature +/- 8%
Inlet airflow +/- 5%
Intake manifold pressure-gage +/- 10%
Exhaust flow +/- 6%
Specific fuel consumption +/- 3%
Specific fuel consumption (C7-C18) +/- 4%
Fuel rate +/- 5%
Specific DEF consumption +/- 3%
DEF rate +/- 5%
Heat rejection +/- 5%
Heat rejection exhaust only +/- 10%
Heat rejection CEM only +/- 10%
Heat Rejection values based on using treated water.
Torque is included for truck and industrial applications, do not use for Gen Set or steady state applications.

PERFORMANCE DATA[DM8155]

On C7 - C18 engines, at speeds of 1100 RPM and under these values are provided for reference only, and may not meet the tolerance listed.
On 3500 and C175 engines, at speeds below Peak Torque these values are provided for reference only, and may not meet the tolerance listed.
These values do not apply to C280/3600. For these models, see the tolerances listed below.
C280/3600 HEAT REJECTION TOLERANCE FACTORS:
Heat rejection +/- 10%
Heat rejection to Atmosphere +/- 50%
Heat rejection to Lube Oil +/- 20%
Heat rejection to Aftercooler +/- 5%
TEST CELL TRANSDUCER TOLERANCE FACTORS:
Torque +/- 0.5%
Speed +/- 0.2%
Fuel flow +/- 1.0%
Temperature +/- 2.0 C degrees
Intake manifold pressure +/- 0.1 kPa
OBSERVED ENGINE PERFORMANCE IS CORRECTED TO SAE J1995 REFERENCE
AIR AND FUEL CONDITIONS.
REFERENCE ATMOSPHERIC INLET AIR
FOR 3500 ENGINES AND SMALLER
SAE J1228 AUG2002 for marine engines, and J1995 JAN2014 for other engines, reference atmospheric pressure is 100 KPA (29.61 in hg), and standard temperature is 25deg C (77 deg F) at 30% relative humidity at the stated aftercooler water temp, or inlet manifold temp.
FOR 3600 ENGINES
Engine rating obtained and presented in accordance with ISO 3046/1 and SAE J1995 JANJAN2014 reference atmospheric pressure is 100 KPA (29.61 in hg), and standard temperature is 25deg C (77 deg F) at 30% relative humidity and 150M altitude at the stated aftercooler water temperature.
MEASUREMENT LOCATION FOR INLET AIR TEMPERATURE
Location for air temperature measurement air cleaner inlet at stabilized operating conditions.
REFERENCE EXHAUST STACK DIAMETER
The Reference Exhaust Stack Diameter published with this dataset is only used for the calculation of Smoke Opacity values displayed in this dataset. This value does not necessarily represent the actual stack diameter of the engine due to the variety of exhaust stack adapter options available. Consult the price list, engine order or general dimension drawings for the actual stack diameter size ordered or options available.
REFERENCE FUEL
DIESEL
Reference fuel is #2 distillate diesel with a 35API gravity;
A lower heating value is 42,780 KJ/KG (18,390 BTU/LB) when used at 15 deg C (59 deg F), where the density is
850 G/Liter (7.0936 Lbs/Gal).
GAS
Reference natural gas fuel has a lower heating value of 33.74 KJ/L (905 BTU/CU Ft). Low BTU ratings are based on 18.64 KJ/L (500 BTU/CU FT) lower heating value gas. Propane ratings are based on 87.56 KJ/L (2350 BTU/CU Ft) lower heating value gas.
ENGINE POWER (NET) IS THE CORRECTED FLYWHEEL POWER (GROSS) LESS
EXTERNAL AUXILIARY LOAD
Engine corrected gross output includes the power required to drive standard equipment; lube oil, scavenge lube oil, fuel transfer, common rail fuel, separate circuit aftercooler and jacket water pumps. Engine net power available for the external (flywheel) load is calculated by subtracting the sum of auxiliary load from the corrected gross flywheel out put power. Typical auxiliary loads are radiator cooling fans, hydraulic pumps, air compressors and battery charging alternators. For Tier 4 ratings additional Parasitic losses would also include Intake, and Exhaust Restrictions.
ALTITUDE CAPABILITY
Altitude capability is the maximum altitude above sea level at standard temperature and standard pressure at which the engine could develop full rated output power on the current performance data set.
Standard temperature values versus altitude could be seen on TM2001.
When viewing the altitude capability chart the ambient temperature is the inlet air temp at the compressor inlet.
Engines with ADEM MEUI and HEUI fuel systems operating at conditions above the defined altitude capability derate for atmospheric pressure and temperature conditions outside the values defined, see TM2001.
Mechanical governor controlled unit injector engines require a setting change for operation at conditions above the altitude defined on the engine performance sheet. See your Caterpillar technical representative for non standard ratings.
REGULATIONS AND PRODUCT COMPLIANCE

PERFORMANCE DATA[DM8155]

TMI Emissions information is presented at 'nominal' and 'Potential Site Variation' values for standard ratings. No tolerances are applied to the emissions data. These values are subject to change at any time. The controlling federal and local emission requirements need to be verified by your Caterpillar technical representative.
Customer's may have special emission site requirements that need to be verified by the Caterpillar Product Group engineer.
EMISSION CYCLE LIMITS:
Cycle emissions Max Limits apply to cycle-weighted averages only. Emissions at individual load points may exceed the cycle-weighted limit.
WET & DRY EXHAUST/EMISSIONS DESCRIPTION:
Wet - Total exhaust flow or concentration of total exhaust flow
Dry - Total exhaust flow minus water vapor or concentration of exhaust flow with water vapor excluded
EMISSIONS DEFINITIONS:
Emissions : DM1176
EMISSION CYCLE DEFINITIONS
1. For constant-speed marine engines for ship main propulsion, including,diesel-electric drive, test cycle E2 shall be applied, for controllable-pitch propeller sets
test cycle E2 shall be applied.
2. For propeller-law-operated main and propeller-law-operated auxiliary engines the test cycle E3 shall be applied.
3. For constant-speed auxiliary engines test cycle D2 shall be applied.
4. For variable-speed, variable-load auxiliary engines, not included above, test cycle C1 shall be applied.
HEAT REJECTION DEFINITIONS:
Diesel Circuit Type and HHV Balance : DM9500
HIGH DISPLACEMENT (HD) DEFINITIONS:
3500: EM1500
RATING DEFINITIONS:
Agriculture : TM6008
Fire Pump : TM6009
Generator Set : TM6035
Generator (Gas) : TM6041
Industrial Diesel : TM6010
Industrial (Gas) : TM6040
Irrigation : TM5749
Locomotive : TM6037
Marine Auxiliary : TM6036
Marine Prop (Except 3600) : TM5747
Marine Prop (3600 only) : TM5748
MSHA : TM6042
Oil Field (Petroleum) : TM6011
Off-Highway Truck : TM6039
On-Highway Truck : TM6038
SOUND DEFINITIONS:
Sound Power : DM8702
Sound Pressure : TM7080
Date Released : 03/12/24

Print

Systems Data
Reference Number: DM8155

November 12, 2024
For Help Desk Phone Numbers Click Here

AIR INTAKE SYSTEM		
THE INSTALLED SYSTEM MUST COMPLY WITH THE SYSTEM LIMITS BELOW FOR ALL EMISSIONS CERTIFIED ENGINES TO ASSURE REGULATORY COMPLIANCE.		
MAXIMUM ALLOWABLE INTAKE RESTRICTION WITH CLEAN ELEMENT	15	IN-H20
MAXIMUM ALLOWABLE INTAKE RESTRICTION WITH DIRTY ELEMENT	25	IN-H20
MAXIMUM PRESSURE DROP FROM COMPRESSOR OUTLET TO MANIFOLD INLET (OR MIXER INLET FOR EGR)	4.4	IN-HG
COOLING SYSTEM		
ENGINE ONLY COOLANT CAPACITY	5.5	GAL
MAXIMUM ALLOWABLE JACKET WATER OUTLET TEMPERATURE	219	DEG F
REGULATOR LOCATION FOR JW (HT) CIRCUIT	OUTLET	
MAXIMUM UNINTERRUPTED FILL RATE	5.0	G/MIN
ENGINE SPEC SYSTEM		
CYLINDER ARRANGEMENT	INLINE	
NUMBER OF CYLINDERS	6	
CYLINDER BORE DIAMETER	5.4	IN
PISTON STROKE	6.7	IN
TOTAL CYLINDER DISPLACEMENT	928	CU IN
STANDARD CRANKSHAFT ROTATION FROM FLYWHEEL END	CCW	
STANDARD CYLINDER FIRING ORDER	1-5-3-6-2-4	
NUMBER 1 CYLINDER LOCATION	FRONT	
STROKES/COMBUSTION CYCLE	4	
EXHAUST SYSTEM		
THE INSTALLED SYSTEM MUST COMPLY WITH THE SYSTEM LIMITS BELOW FOR ALL EMISSIONS CERTIFIED ENGINES TO ASSURE REGULATORY COMPLIANCE.		
MAXIMUM ALLOWABLE SYSTEM BACK PRESSURE	40	IN-H20
MANIFOLD TYPE	DRY	
FUEL SYSTEM		
MAXIMUM FUEL FLOW FROM TRANSFER PUMP TO ENGINE	111.0	G/HR
MAXIMUM ALLOWABLE FUEL SUPPLY LINE RESTRICTION	8.0	IN-HG
MAXIMUM ALLOWABLE FUEL TEMPERATURE AT TRANSFER PUMP INLET	174	DEG F
MAXIMUM FUEL FLOW TO RETURN LINE FROM ENGINE	103.0	G/HR
MAXIMUM ALLOWABLE FUEL RETURN LINE RESTRICTION	14.8	IN-HG
NORMAL FUEL PRESSURE IN A CLEAN SYSTEM	101.5	PSI
FUEL SYSTEM TYPE	MEUI	
MAXIMUM TRANSFER PUMP PRIMING LIFT WITHOUT PRIMING PUMP	12.1	FT
MAXIMUM FUEL TEMPERATURE AT ENGINE OUTLET	225	DEG F

MAXIMUM ALLOWABLE FUEL TEMPERATURE AT TRANSFER PUMP OUTLET	174	DEG F
LUBE SYSTEM		
CRANKCASE VENTILATION TYPE	TO_ATMOSPHERE	
MOUNTING SYSTEM		
CENTER OF GRAVITY LOCATION - X DIMENSION - FROM REAR FACE OF BLOCK - (REFERENCE TM7077)	22.2	IN
CENTER OF GRAVITY LOCATION - Y DIMENSION - FROM CENTERLINE OF CRANKSHAFT - (REFERENCE TM7077)	9.4	IN
CENTER OF GRAVITY LOCATION - Z DIMENSION - FROM CENTERLINE OF CRANKSHAFT - (REFERENCE TM7077)	0	IN
STARTING SYSTEM		
MINIMUM CRANKING SPEED REQUIRED FOR START	115	RPM
LOWEST AMBIENT START TEMPERATURE WITHOUT AIDS	32	DEG F

Cookie Settings

PACKAGE DATA [C15DECF]

NOVEMBER 12, 2024

For Help Desk Phone Numbers Click here

Feature Code:	C15DECF	**Rating Type:**	STANDBY	**Sales model Package:**	PGS500
Engine Sales Model:	C15	**Engine Arrangement Number:**	4206876	**Hertz:**	60
EKW W/F:	500.0	**Noise Reduction:**	0 dBA	**Back Pressure:**	0.0 inH2O

Engine Package Information

Engine Package Data

Package Cooling Information

Open Cooling Data

% Load	Airflow Rate scfm			Ambient Capability Sea Level (Deg F)			Ambient Capability 300 m (Deg F)			Ambient Capability 600 m (Deg F)			Ambient Capability 900 m (Deg F)		
	0 inH2O	1/2 inH2O	3/4 inH2O	0 inH2O	1/2 inH2O	3/4 inH2O	0 inH2O	1/2 inH2O	3/4 inH2O	0 inH2O	1/2 inH2O	3/4 inH2O	0 inH2O	1/2 inH2O	3/4 inH2O
100.0	29770	27827	26909	140	140	136	131	131	131	113	113	113	95	95	95
75.0	29770	27827	26909	140	140	140	140	140	140	140	140	140	140	140	140

SA Level 1 Canopy Cooling Data

% Load	Airflow Rate scfm	Ambient Capability Sea Level (Deg F)	Ambient Capability 300 m (Deg F)	Ambient Capability 600 m (Deg F)	Ambient Capability 900 m (Deg F)
100.0	26415	118	116	104	95
75.0	26415	138	136	136	134

SA Level 2 Canopy Cooling Data

% Load	Airflow Rate scfm	Ambient Capability Sea Level (Deg F)	Ambient Capability 300 m (Deg F)	Ambient Capability 600 m (Deg F)	Ambient Capability 900 m (Deg F)
100.0	26415	131	129	127	125

Package Sound Information

Sound Comments :

Caterpillar Confidential: **Green**
Content Owner: Commercial Processes Division
Web Master(s): PSG Web Based Systems Support
Current Date: 11/12/2024, 3:34:48 PM
© Caterpillar Inc. 2024 All Rights Reserved.
Data Privacy Statement.
Cookie Settings

South Coast
Air Quality Management District
21865 Copley Drive, Diamond Bar, CA 91765-4178
(909) 396-2000 • www.aqmd.gov

December 14, 2023

Mr. Bob Shepherd
Caterpillar, Inc./Quinn Power Systems
PO Box 226789
Los Angeles, CA 90022-0489

Dear Mr. Shepherd:

The South Coast Air Quality Management District (South Coast AQMD) has extended Certified Equipment Permits (CEPs) to December 31, 2024 for the stationary emergency internal combustion (IC) engine models listed in the attached table. However, please be reminded that many of these certified diesel-fueled IC engines may not meet Rule 1470 requirements if installed at or near a sensitive receptor or near school grounds and, therefore, may require an aftertreatment system such as a diesel particulate filter in the exhaust stream.

Please note that the South Coast AQMD does not endorse or warrant any specific equipment or manufacturer. Modification of the equipment listed here will void this certification.

If you have additional questions or need further clarification on the CEP program, please feel free to contact CJ Chang at (909) 396-3293, cchang@aqmd.gov; or Susan Tsai at (909) 396-2529, stsai@aqmd.gov.

Sincerely,

David Ono

David Ono
Senior Air Quality Engineering Manager
Engineering and Permitting

DO:ST:CC

Cleaning the air that we breathe...

SOUTH COAST AIR QUALITY MANAGEMENT DISTRICT
Certified ICE-Emergency Generators

CATERPILLAR, INC./QUINN POWER SYSTEMS

Engine Mfg.	Model	Engine Rating	Application No.
Caterpillar	C4.4 (60 kWe)	99.9 BHP	544534
Caterpillar	C4.4 (80/100 kWe)	156.8 BHP	482670
Caterpillar	C-6.6 (125/150/175 kWe)	274 BHP	472638
Perkins	1106D-E66TAG4	274 BHP	457877
Caterpillar	C7.1 (125 kWe)	229 BHP	585257
Caterpillar	C7.1 (150 kWe)	247 BHP	585258
Caterpillar	C7.1 (175 kWe)	280 BHP	585259
Caterpillar	C7.1 (200 kWe)	315 BHP	567863
Caterpillar	C9 (200/230 kWe)	374 BHP	514974
Caterpillar	C-9 (250 kWe)	398 BHP	455162
Caterpillar	C-9 (300 kWe)	480 BHP	455163
Caterpillar	C15 (350 kWe)	546 BHP	554734
Caterpillar	C-15 (400 kWe)	619 BHP	452052
Caterpillar	C15 (450 kWe)	689 BHP	600362
Caterpillar	C15 (500 kWe)	762 BHP	554729
Caterpillar	C15 (550 kWe)	839 BHP	554730
Caterpillar	C-18 (550 kWe)	839 BHP	453934
Caterpillar	C-18 (600 kWe)	900 BHP	453933
Caterpillar	C-18 (750 kWe)	1112 BHP	611877

UNITED STATES ENVIRONMENTAL PROTECTION AGENCY
2024 MODEL YEAR
CERTIFICATE OF CONFORMITY
WITH THE CLEAN AIR ACT

OFFICE OF TRANSPORTATION AND AIR QUALITY
ANN ARBOR, MICHIGAN 48105

Certificate Issued To: **Caterpillar Inc.**
(U.S. Manufacturer or Importer)

Certificate Number: RCPXL15.2NZS-025

Effective Date: 07/26/2023

Expiration Date: 12/31/2024

Byron J. Bunker, Division Director
Compliance Division

Issue Date: 07/26/2023

Revision Date: N/A

Model Year: 2024
Manufacturer Type: Original Engine Manufacturer
Engine Family: RCPXL15.2NZS

Mobile/Stationary Indicator: Stationary
Emissions Power Category: 560<kW<=2237
Fuel Type: Diesel
After Treatment Devices: No After Treatment Devices Installed
Non-after Treatment Devices: Electronic Control, Engine Design Modification

Pursuant to Section 111 and Section 213 of the Clean Air Act (42 U.S.C. sections 7411 and 7547) and 40 CFR Part 60, and subject to the terms and conditions prescribed in those provisions, this certificate of conformity is hereby issued with respect to the test engines which have been found to conform to applicable requirements and which represent the following engines, by engine family, more fully described in the documentation required by 40 CFR Part 60 and produced in the stated model year.

This certificate of conformity covers only those new compression-ignition engines which conform in all material respects to the design specifications that applied to those engines described in the documentation required by 40 CFR Part 60 and which are produced during the model year stated on this certificate of the said manufacturer, as defined in 40 CFR Part 60.

It is a term of this certificate that the manufacturer shall consent to all inspections described in 40 CFR 1068 and authorized in a warrant or court order. Failure to comply with the requirements of such a warrant or court order may lead to revocation or suspension of this certificate for reasons specified in 40 CFR Part 60. It is also a term of this certificate that this certificate may be revoked or suspended or rendered void *ab initio* for other reasons specified in 40 CFR Part 60.

This certificate does not cover engines sold, offered for sale, or introduced, or delivered for introduction, into commerce in the U.S. prior to the effective date of the certificate.

Caterpillar Emergency Engines
SCAQMD CEP List
January 11, 2024

			EPA Engine Certification (2024) (g/bhp-hr)						TMI Reference Data (g/bhp-hr)	SCAQMD BACT Guidelines (2016) (g/bhp-hr)				
Model	Generator kW	HP	Family Name	HC	NOx	NMHC + NOx	CO	PM	TMI Reference	HC	NOx	NMHC + NOx	CO	PM
C15	500	762	RCPXL15.2NZS	0.07	4.01	4.10	1.19	0.07	DM8155-03			4.8	2.6	0.15

ULCERT
UL 2200 LISTING

INCLUDES THE FOLLOWING:

ALTERNATOR
Alternator insulation system is UL Recognized (UL 1446). PMG and AREP alternators are available. Automatic voltage regulators are UL Recognized.

WIRE HARNESS
AC, DC, and power harnesses are made with UL Listed wire and UL Listed terminals.

CONTROL PANEL
Control panels are comprised of UL Listed and UL Recognized components. EMCP is UL Recognized.

CIRCUIT BREAKER
Output circuit breaker is 100% rated and UL Listed.

TESTING
All UL Listed sets are designed and rigorously tested in accordance with UL Standard for Safety, UL 2200.

LABELING
Labeling meets UL requirements.

MECHANICAL OPTIONS
Mechanical options do not require UL Listing and, therefore, are not affected. The exceptions to this are:

FUEL TANKS
If a fuel tank is ordered with the unit, it must be UL Listed. Two versions are available: 24 hour integral (FCUL2) and 24/48 hour sub-base (FSBT)

ENCLOSURES
Factory installed enclosures meet UL requirements. Weatherproof and sound attenuated versions are available.

ELECTRICAL OPTIONS
The table below shows electrical options that meet UL requirements:

EOS	Lube Oil Sump Heater
WCA1	Low Coolant Level Shutdown
WSS1	Low Coolant Temperature Alarm
AH1H	Anti-Condensation Heater
WHH	Coolant Heater
GOVES	Electronic Governor (Fully Adjustable)
FSS1	Critical Low Fuel Level Shutdown
FSS2	Low Fuel Level Alarm
FSSS	Critical High Fuel Alarm
PBCSUL	UL Listed Battery Charger
PBC10NU	NFPA Battery Charger, UL Listed

UL Listing is available on all diesel fuelled generator sets up to 17S kW at 60 Hz, 600 vac maximum.

LEHE0410-01 (11-18)

BUILT FOR IT.™

www.Cat.com/electricpower
©2018 Caterpillar All rights reserved. Materials and specifications are subject to change without notice. The International System of Units (SI) is used in this publication. CAT, CATERPILLAR, their respective logos, ADEM, S•O•S, "BUILT FOR IT", "Caterpillar Yellow", the "Power Edge" trade dress as well as corporate and product identity used herein, are trademarks of Caterpillar and may not be used without permission.

Caterpillar: Confidential Green

CERTIFICATE OF COMPLIANCE
SEISMIC DESIGN OF NONSTRUCTURAL COMPONENTS AND SYSTEMS

Certification No.

VMA-50365-01C (Revision 13)

Expiration Date: 9/30/2023

Certification Parameters:

The nonstructural products (mechanical and/or electrical components) listed on this certificate are CERTIFIED[1] FOR SEISMIC APPLICATIONS in accordance with the following building code[2] releases.

IBC 2018, 2015, 2012, 2009, 2006

The following model designations, options, and accessories are included in this certification. Reference report number VMA-50365-01 as issued by The VMC Group for a complete list of certified models, included accessories/options, and certified installation methods.

Caterpillar; Diesel Gensets
Series C4.4LC, C4.4, C6.6, C7.1, C9, C13, C15, C18

The above referenced equipment is **APPROVED** for seismic application when properly installed[3], used as intended, and contains a Seismic Certification Label referencing this Certificate of Compliance[4]. As limited by the tabulated values, below grade, grade, and roof-level installations, installations in essential facilities, for life safety applications, and/or of equipment containing hazardous contents are permitted and included in this certification with an Equipment Importance Factor assigned as I_p=1.5. The equipment is qualified by comparative analysis and successful seismic shake table testing at the nationally recognized University of California Berkeley Pacific Earthquake Engineering Research Center and CERL (US Army Corp. of Engineers) Laboratory under the review of the ISO Accredited Product Certification Agency, the VMC Group.

Certified Seismic Design Levels			
Certified IBC	**Importance $I_p \leq 1.5$** Soil Classes A-E Risk Categories I-IV Design Categories A-F	z/h ≤ 1.0	z/h = 0.0
		$S_{DS} \leq 0.753$ g	$S_{DS} \leq 2.260$ g

Certified Seismic Installation Methods[8]	
Rigid Mounting From Unit Base To Rigid Structure	Rigid Mounting From Unit Base To Fuel Tank
External Isolation Mounting From Unit Base To Rigid Structure	

HEADQUARTERS
113 Main Street
Bloomingdale, NJ 07403
Phone: 973.838.1780
Toll Free: 800.569.8423
Fax: 973.492.8430

CALIFORNIA
180 Promenade Circle
Suite 300
Sacramento, CA 95834
Phone: 916.634.7771

TEXAS
11930 Brittmoore Park Drive
Houston, TX 77041
Phone: 713.466.0003
Fax: 713.466.1355

thevmcgroup.com

CERTIFICATE OF COMPLIANCE

SEISMIC DESIGN OF NONSTRUCTURAL COMPONENTS AND SYSTEMS

Certified Product Table:

Series	Max Rating [kW]	EPA Rating	Length [in]	Width [in]	Height [in]	Max. Off Tank Weight [lbs]	Max. On Tank Weight [lbs]	S_{DS} at z/h=0.0	S_{DS} at z/h=1.0	Certified Installation Methods
C4.4LC	60	Tier 3	98	43	78	2,293	4,979	2.49	0.83	Rigid
C4.4	100		136	44	92	3,961	8,516			
C6.6	175		198		96	5,080	12,752			
C7.1	200					5,338	13,010			
C9	300		219	81	114	8,364	19,850	2.26	0.75	Rigid and Externally Spring Isolated
C13	400		286		124	11,036	30,864			
C15	450		251		127	11,393	28,504			
	500	Tier 2				11,923	29,034			
C18	600		286		124	12,179	32,031			
	500	Tier 4F	247	90	111	13,720	21,687			
	750	Tier 2	275	91	106	15,585	N/A			Rigid
						N/A	28,209		1.29	

Group	Type	SDS (z/h=0)	SDS (z/h=1)	A_{Flex-H}	A_{Rig-H}	A_{Flex-V}	A_{Rig-V}	F_p/W_p
Seismic	AC156	2.26	0.75	2.26	0.9	1.51	0.6	0.54

Notes:
1. Weights include genset, enclosure (where applicable), tank and fuel (where applicable)
2. For a detailed list of weights, certified installation methods, and certified seismic design levels please refer to the certification report referenced on the first page of this certificate.

This certification includes the open generator set and the enclosed generator set when installed with or without the sub-base tank. This certification also includes the sub-base tank as a stand-alone accessory. The generator set and included options shall be a catalogue design and factory supplied. The generator set and applicable options shall be installed and attached to the building structure per the manufacturer supplied seismic installation instructions. For a list of certified configurations and options please directly contact the manufacturer. This certification excludes all non-factory supplied accessories, including but not limited to mufflers, isolation/restraint devices, remote control panels, remote radiators, pumps and other electrical/mechanical components.

VMA-50365-01C (Revision 13)
Issue Date: Friday, May 6, 2016
Revision Date: Friday, November 20, 2020
Expiration Date: Saturday, September 30, 2023

CERTIFICATE OF COMPLIANCE

SEISMIC DESIGN OF NONSTRUCTURAL COMPONENTS AND SYSTEMS

Notes & Comments:

1. All equipment listed herein successfully passed the seismic acceptance criteria for shake testing non-structural components and systems as set forth in the ICC AC-156. The Test Response Spectrum (TRS) enveloped the Required Response Spectrum (RRS) for all units tested. The tested units were representative sample(s) of a contingent of models and all remained captive and structurally sound after the seismic shake simulation. The units also remained functionally operational after the simulation testing as functional testing was completed by the equipment manufacturer before and after the seismic simulations. Although a seismic qualified unit inherently contains some wind resisting capacity, that capacity is undetermined and is excluded from this certification. Snow/Ice loads have been neglected and thus limit the unit to be installed both indoors (covered by an independent protective structure) and out of doors (exposed to accumulating snow/ice) for ground snow loads no greater than 30 psf for all applications.

2. The following building codes are addressed under this certification:
   IBC 2018 referencing ASCE7-16 and ICC-ES AC-156
   IBC 2015 referencing ASCE7-10 and ICC-ES AC-156
   IBC 2012 referencing ASCE7-10 and ICC-ES AC-156
   IBC 2009 referencing ASCE7-05 and ICC-ES AC-156
   IBC 2006 referencing ASCE7-05 and ICC-ES AC-156

3. Refer to the manufacturer supplied installation drawings for anchor requirements and mounting considerations for seismic applications. Required anchor locations, size, style, and load capacities (tension and shear) may be specified on the installation drawings or specified by a 3rd party. Mounting requirement details such as anchor brand, type, embedment depth, edge spacing, anchor-to-anchor spacing, concrete strength, special inspection, wall design, and attachment to non-building structures must be outlined and approved by the Engineer of Record for the project or building. Structural walls, structural floors, and housekeeping pads must also be seismically designed and approved by the project or building Structural Engineer of Record to withstand the seismic anchor loads as defined on the installation drawings. The installing contractor is responsible for ensuring the proper installation of all anchors and mounting hardware.

4. For this certificate and certification to remain valid, this certificate must correspond to the "Seismic Certification Label" found affixed to the unit by the factory. The label ensures the manufacturer built the unit in conformance to the IBC seismic design criteria set forth by the Certified Seismic Qualification Agency, the VMC Group, and meets the seismic design levels claimed by this certificate.

5. Mechanical, Electrical, and Plumbing connections to the equipment must be flexibly attached as to not transfer load through the connection. The structural integrity of any conduit, cable trays, piping, ductwork and/or flexible connections is the responsibility of others. This certification does not guarantee the equipment will remain compliant to NEMA, IP, UL, or CSA standards after a seismic event.

6. This certificate applies to units manufactured at:
   1720 West Kingsbury Street, Seguin, TX 78155
   Rodovia Luiz de Queiorz-KM 157 CEP 13420-900, Piracicaba/SP-Brazil

7. This certification follows the VMC Group's ISO-17065 Scheme.

8. The certified seismic installation methods states are a summary for all series this certificate covers, for more detailed information on the certified seismic installation methods, see the certified product tables.

John P. Giuliano, PE
President, VMC Group

VMA-50365-01C (Revision 13)
Issue Date: Friday, May 6, 2016
Revision Date: Friday, November 20, 2020
Expiration Date: Saturday, September 30, 2023

CATERPILLAR®

Quinn Power Systems

Project # / Name:		**Genset ID#**	
Startup Level:		**Genset Serial#**	
Customer:			
Contact Name		**Contact Number**	

Pre-Startup Checklist

This document is provided to assist in the startup of your Caterpillar Equipment. Each checklist item below is to be completed prior to commencement of startup activities. This information will also help to insure against the probability of incurring additional expense.

It is mandatory this document be completed and returned to QPS via the original e-mail sender; indicating the current equipment status, expected completion dates of incomplete items and the requested startup date. Please send photos of noted items as verification of completion. (**Note:** all incomplete items are required to be completed before startup personnel arrive on site).

A minimum of **three/four week notice** is recommended to schedule resources for startup. This does not guarantee availability of startup personnel. Your project manager will coordinate all startup activities with you.

Requested Start-up Date:		**Form Completed by:**	
Start-up Address:	**City:**	**State:**	**Zip Code:**
Site Contact:	**Contact Cell Number:**	**Contact Company:**	
Alternate Site Contact:	**Alternate Contact Cell Number:**	**Contact Company:**	
Security Clearance Required: If yes details need to be provided below in the comments section.	**Noise restrictions: If yes details need to be provided below in the comments section.(provide start/end time)**	**Site Safety Orientation Required:**	**PPE Requirements: If yes please list PPE requirements below in the comments section.**
☐ **Yes** ☐**No**	☐**Yes** ☐ **No**	☐ **Yes** ☐**No**	☐ **Yes** ☐**No**
Comments			

If Quinn Technician arrives on site and the conditions are not found to be in the stated conditions of completion, Quinn Power Systems reserves the right to charge for additional compensation outside the agreed upon contract documents. If the Customer requests, requires, or authorizes Quinn Power Systems to perform any services in addition to the agreed upon Scope of Work the Customer shall pay Quinn Power Systems for such Additional Services at current Quinn Power Systems field service rates. The Customer shall also reimburse Quinn Power Systems for all mileage and travel expenses, subcontractors, dealer technicians, material and equipment incurred in the performance of additional work.

Caterpillar: Confidential Green

CATERPILLAR®

Quinn Power Systems

EQUIPMENT	STATUS	EXPECTED COMPLETION DATE
Items to be completed before requesting startup scheduling:		
1. Air quality permits obtained / Permit to operate (AQMD, Ventura, SJVAPCD, etc.). **Please submit a PDF copy**		
2. Generator and additional supplied (shipped loose) equipment is set in place (anchored) or mounted. [* Avoid top entry on outdoor rated equipment] **Send Photo**		
3. Coordination Study, if necessary has been completed and addressed prior to startup.	☐Yes ☐No ☐N/A	
4. All Utility and Generator connections terminated and available? **Send Photo**	☐Yes ☐No ☐N/A	
5. All source and feeder cables are installed, terminated and tested per all drawings and codes. **Send Photo**	☐ Yes ☐No ☐N/A	
Items to be completed before startup activities commence (if not applicable list as N/A):		
6. Exhaust systems complete and fully installed (rain cap, rain shield, gaskets, DPF/Silencer, radiator flow, blankets etc.) [*Ensure all exhaust connections include a gasket] **Send Photo**	☐ Yes ☐No ☐ N/A	
7. Louvers, radiator ducting and/or exhaust fans connected, powered and or unobstructed. **Send Photo**	☐ Yes ☐No ☐N/A	
8. Engine batteries and racks installed on each generator. **Send Photo**	☐ Yes ☐No ☐N/A	
9. Confirm AC shore power available at Generator (Battery charger/Space Heater/etc.). **Send Photo**	☐ Yes ☐No ☐N/A	
10. Confirm acceptable fluid levels. (Coolant, Oil, Urea, Etc.) [* Advise of any deficiencies prior to tech arrival]	☐Yes ☐No ☐N/A	
11. Complete installation/support of shipped loose fuel vent extensions. **Send Photo**	☐Yes ☐No ☐N/A	
12. Fuel tank, Day tank and or Gas piping installation complete.	☐ Yes ☐No ☐N/A	
13. Fuel delivery complete including coordination with inspector/fire marshal, please ensure this is complete or scheduled no later than the morning of the 1st Quinn tech visit. [*For Diesel Gensets, it is recommended to have at least 90% of capacity to test alarms/floats (Diesel #2 Ultra low Sulfur fuel)]	☐Yes ☐No ☐N/A	
14. Field wiring complete from generator to (ATS, MTS, Quick connect, Loadbank, DPF, Remote E-stop buttons, etc.) **Send Photo**	☐ Yes ☐No ☐N/A	
15. Communication cabling installed for remote access, BMS, Remote annunciators, etc. **Send Photo**	☐Yes ☐No ☐N/A	
16. Building load available for NFPA 110 testing (2 hr. building load). [* If no building load, confirm approval of 4hr Load Bank test and note a building transfer test, at a later date, will incur additional cost]	☐Yes ☐No ☐N/A	
17. End User has been notified of Start-up and understands that interruptions to the downstream service may occur during building transfer.	☐Yes ☐No ☐N/A	

Name: _____ Date: _____

Title: _____

Caterpillar: Confidential Green

NFPA 110, 7.13 EPSS Installation Test Procedure

NFPA 110, 7.13 Procedure for EPSS Installation Acceptance

3500 Shepherd St., City of Industry, CA 90601 562-463-6000

Customer	
Site	
	Job Number
Engine M/N	Generator M/N
Engine S/N	Generator S/N
Hours	Gen. Prime No.
Date	Technician

From: **NFPA 110 Standard for Emergency and Standby Power Systems, 2019 Edition**.

Step 1

7.13.1 Upon completion of the installation of the EPSS, the EPS shall be tested to ensure conformity to the requirements of the standard with respect to both power output and function.

7.13.2.2 The test shall be conducted after completion of the installation with all EPSS accessory and support equipment in place and operating.

7.13.4 The EPSS shall perform within the limits specified in this standard.

7.13.4.1 The on-site installation acceptance test shall be conducted in accordance with 7.13.4.1.1 through 7.13.4.1.4.

Procedure		
7.13.4.1.1* In a *new and unoccupied building or facility*, with the prime mover in a cold start condition and the emergency load at operating level, a normal power failure shall be initiated by opening all switches or circuit breakers supplying the normal power to the building or facility. **7.13.4.1.2*** In an *existing occupied building or facility*, with the prime mover in a cold start condition and the emergency load at operating level, a normal power failure shall be simulated by operating at least one transfer switch test function or initiated by opening all switches or breakers supplying normal power to all ATSs that are part of the EPSS being commissioned by this initial acceptance test.		
7.13.4.1.3 When the EPSS consists of paralleled EPS's, the system control function for paralleling and load shedding shall be verified in accordance with system design documentation.		
7.13.4.1.4 The tests conducted in accordance with 7.13.4.1.1 and 7.13.4.1.2 shall be performed in accordance with (1) through (12).		
(1) When the EPSS consists of paralleled EPSs, the quantity of EPSs intended to be operated simultaneously shall be tested simultaneously with building load for the test period identified in 7.13.4.1.4(10).		
(2) The test load shall be all loads that are served by the EPSS. There is no minimum loading requirement for this portion of the test.		
(3) The time delay on start shall be observed and recorded.		Sec
(4) The cranking time until the prime mover starts and runs shall be observed and recorded.		Sec
(5) The time taken to reach operating speed shall be observed and recorded.		Sec
(6)*The engine start function shall be confirmed by verifying operation of the initiating circuit of all transfer switches supplying EPSS loads.		
(7) The time taken to achieve a steady-state condition with all switches transferred to the emergency position shall be observed and recorded.		Sec
(8) The voltage, frequency, and amperes shall be recorded.		
(9) Where applicable, the prime mover oil pressure and water temperature shall be recorded.		
(10) The load test with building load, or other loads that simulate the intended load as specified in Section 5.4, shall be continued for **not less than 2 hours**, and the run time shall be recorded.		

Intervals Start @	Time	Volts			Amps			Kw	Hz	Water Temp	Oil Press	Batt. Charge Rate	Amb Temp
		1	2	3	1	2	3						
Start													
+5 min													
+10 min													
+15 min													
+30 min													
+45 min													
+60 min													
+75 min													
+90 min													
+105 min													
+120 min													

(11) When normal power is restored to the building or facility, the time delay on retransfer to normal power for each switch with a minimum setting of 5 minutes shall be recorded.

Sw-1	Sw-2	Sw-3	Sw-4	Sw-5	Sw-6	Sw-7	Sw-8	

(12) The time delay on the prime mover cooldown period and shutdown shall be recorded.

7.13.4.2 After completion of the test performed in 7.13.4.1, the prime mover shall be allowed to cool for not less than 5 minutes.

Step 2

7.13.4.3* A load shall be applied for a 2-hour, full-load test. The building load shall be permitted to serve as part or all of the load, supplemented by a load bank of sufficient size to provide a load equal to 100 percent of the nameplate kW rating of the EPS, less applicable derating factors for site conditions. With full load applied, the coolant temperature of the generator set shall stabilize at a constant value relative to outdoor ambient temperature at least 30 minutes prior to completion of the test.

7.13.4.3.1 This full-load test shall be initiated after the test specified in 7.13.4.1.4 by any method that starts the prime mover and, upon reaching rated rpm, picks up not less than 30 percent of the nameplate Kw rating for the first 30 minutes, not less than 50 percent of the nameplate Kw rating for the next 30 minutes, and 100 percent of the nameplate Kw rating for the next 60 minutes, less applicable derating factors for site conditions.

7.13.4.3.2 A unity power factor shall be permitted for on-site testing, provided that rated load tests at the rated power factor have been performed by the manufacturer of the EPS prior to shipment.

7.13.4.3.3 Where the EPS is a paralleled multi-unit EPS, each unit shall be permitted to be tested individually at its rating.

7.13.4.3.4 The data specified in 7.13.4.1.4(4), (5), and (7) shall be recorded at first load acceptance of the test period identified in 7.13.4.1.4(10).

(4) The cranking time until the prime mover starts and runs shall be observed and recorded.		Sec
(5) The time taken to reach operating speed shall be observed and recorded.		Sec
(7) The time taken to achieve a steady-state condition with all switches transferred to the emergency position shall be observed and recorded.		Sec

7.13.4.3.5 The data specified in 7.13.4.1.4(8) and 7.13.4.1.4(9) shall be recorded at first load acceptance and every 15 minutes thereafter until the completion of the test period identified in 7.13.4.1.4(10).

(8) The voltage, frequency, and amperes shall be recorded.
(9) Where applicable, record prime mover oil pressure and water temperature.

Full Load Test

Intervals	Time	Volts			Amps			Kw	Hz	Water Temp	Oil Press	Batt. Char	Amb Temp
		1	2	3	1	2	3						
Start													
+5 min													
+10 min													
+15 min													
+30 min													
+45 min													
+60 min													
+75 min													
+90 min													
+105 min													
+120 min													

Step 3

7.13.4.4 Any method recommended by the manufacturer for the cycle crank test shall be utilized to prevent the prime mover from running.

7.13.4.4.1 The control switch shall be set at "run" to cause the prime mover to crank.

7.13.4.4.2 The complete crank/rest cycle specified in 5.6.4.2 and Table 5.6.4.2 shall be observed.

Cranking Method (cycle or continuous)	Cranking Cycle	Rest Period

7.13.4.4.3 The battery charge rate shall be recorded at 5-minute intervals for the first 15 minutes or until charge rate stabilization.

Step 4

7.13.4.5 All safeties specified in 5.6.5 and 5.6.6 shall be tested on site as recommended by the manufacturer.

Exception No 1: It shall be permitted for the manufacturer to test and document overcrank, high engine temperature, low lube oil pressure and overspeed safeties prior to shipment.

Exception No 2: Where the safety functions are proven to be fail-safe as demonstrated by monitoring of normal conditions on engine metering and demonstration that a failed sensor or circuit will not cause shutdown of the engine, further testing of the safeties is not required.

5.6.5.1 A control panel shall be provided and shall contain the following:	Verified
(1) Automatic remote start capability	
(2) "Run-off-automatic" switch	
(3) Shutdowns as required by 5.6.5.2(3)	
(a) Failing to start after specified cranking time	
(b) Overspeed	
(c) Low lubricating oil pressure	
(d) High engine temperature (An automatic engine shutdown device for high lubricating oil temperature shall not be required)	
(e) Operation of remote manual stop station	
(4) Individual alarm indication to annunciate any of the conditions listed in Table 5.6.5.2 and with the following characteristics:	
(a) Battery powered	
(b) Visually indicated.	
(c) Have additional contacts or circuits for a common audible alarm that signals locally and remotely when any of the itemized conditions occurs.	
(d) Have a lamp test switch(es) to test the operation of all alarm lamps.	
(5) Controls to shut down the prime mover upon removal of the initiating signal or manual emergency shutdown	

(6) The ac instruments listed in 5.6.9.9	
5.6.5.3 Engines equipped with a maintaining shutdown device (air shutdown damper) shall have a set of contacts that monitor the position of this device, with local alarm indication and remote annunciation in accordance with Table 5.6.5.2.	
5.6.5.4 The control panel in 5.6.5.2(4) shall be specifically approved for either a Level 1 or a Level 2 EPS consistent with the installation.	
5.6.5.5 The cranking cycle shall be capable of being initiated by any of the following:	
(1) Manual start initiation as specified in 5.6.5.2(2)(a).	
(2) Loss of normal power at any automatic transfer switch (ATS) as part of the EPSS. Prime mover shall start after appropriate time delays, upon operation of a remote switch or set of contacts.	
(3) Clock exerciser located in an ATS or in the control panel.	
(4) Manually operated (test) switch located in each ATS that simulates a loss of power and causes automatic starting and operation until this switch is reset, to cause the engine circuit to duplicate its functions in the same manner commercial power is restored after a true commercial power failure.	
(5) Where an ATS is not used, a signal indicating loss of acceptable power.	
5.6.5.6 All installations shall be provided with at least one remote emergency stop switch for each prime mover.	
5.6.5.6.1 The remote emergency stop switch shall be located outside the room housing the prime mover or exterior enclosure and shall be permitted to be mounted on the exterior of the enclosure.	
5.6.5.6.2 Provisions shall be made so access is limited to qualified persons.	
5.6.5.6.3 The remote emergency stop switch shall identify the prime mover it controls.	
5.6.6* Remote Controls and Alarms. A remote, common audible alarm shall be provided as specified in 5.6.5.2(4).	
5.6.6.1 Alarms and annunciation shall be powered by the prime mover starting battery unless operational constraints make this impracticable. In that circumstance an alternate source from the EPSS, such as storage battery, UPS, or branch circuit supplied by the EPSS, shall be permitted.	
5.6.6.2 The following annunciation shall be provided at a minimum: (1) For Level 1 EPS, local annunciation and facility remote annunciation, or local annunciation and network remote annunciation (2) For Level EPS, local annunciation	
5.6.6.3 For the purposes of defining the types of annunciation in 5.6.6.2, the following shall apply: (1) Local annunciation is located on the equipment itself or within the same equipment room. (2) Facility remote annunciation is located on site but not within the room where the equipment is located. (3) Network remote annunciation is located off site.	
5.6.6.4 An alarm-silencing means shall be provided, and the panel shall include repetitive alarm circuitry so that, after the audible alarm has been silenced, it reactivates after the fault condition has been cleared and has to be restored to its normal position to be silenced again.	
5.6.6.5 In lieu of the requirement in 5.6.6.4, a manual alarm silencing means shall be permitted that silences the audible alarm after the occurrence of the alarm condition, provided such means do not inhibit any subsequent alarms from sounding the audible alarm again without further manual action.	
Battery Tests: Equalize charging of battery cells according to manufacturer's written instructions. Record individual cell voltages. a. Measure charging voltage and voltages between available battery terminals for full-charging and float-charging conditions. Check electrolyte level and specific gravity under both conditions.	
b. Test for contact integrity of all connectors. Perform an integrity load test and a capacity load test for the battery.	
c. Verify acceptance of charge for each element of the battery after discharge.	
d. Verify that measurements are within manufacturer's specifications.	
Battery-Charger Tests: Verify specified rates of charge for both equalizing and float-charging conditions. System Integrity Tests: Methodically verify proper installation, connection, and integrity of each element of engine-generator system before and during system operation. Check for air, exhaust, and fluid leaks.	
Exhaust-System Back-Pressure Tests: Use a manometer with a scale exceeding 40-inch wg (120 kPa). Connect to exhaust line close to engine exhaust manifold. Verify that back pressure at full-rated load is within manufacturer's written allowable limits for the engine.	

System Integrity Tests: Methodically verify proper installation, connection, and integrity of each element of engine-generator system before and during system operation. Check for air, exhaust, and fluid leaks.	

END

Effective with sales to the first user on or after July 1, 2023

CATERPILLAR LIMITED WARRANTY

Industrial, Petroleum, Locomotive, and Agriculture Engine Products and Electric Power Generation Products

Worldwide

Caterpillar Inc. or any of its subsidiaries ("Caterpillar") warrants new and remanufactured engines and electric power generation products (new and new with Cat Reman Engines) sold by it (including any products of other manufacturers packaged and sold by Caterpillar), to be free from defects in material and workmanship.

This warranty does not apply to engines sold for use in on-highway vehicle or marine applications; engines in machines manufactured by or for Caterpillar; C175, 3500 and 3600 series engines used in locomotive applications; 3000 Family engines, C0.5 through C4.4 and ACERT™ (C6.6, C7, C7.1, C9, C9.3, C11, C13, C15, C18, C27, and C32) engines used in industrial, mobile agriculture and locomotive applications; or Cat® batteries; or Electric Power Generation products manufactured or assembled and sold in India except GC models, which are covered by this warranty. These products (except for GC models) are covered by other Caterpillar warranties.

This warranty is subject to the following:

Warranty Period

- For industrial engines, engines in a petroleum applications or Petroleum Power Systems (excluding petroleum fire pump application), or engines in a Locomotive application, or Uninterruptible Power Supply (UPS) systems, the warranty period is 12 months after date of delivery to the first user.
- For engines used in petroleum fire pump and mobile agriculture applications the warranty period is 24 months after date of delivery to the first user.
- For controls only (EPIC), configurable and custom switchgear products, and automatic transfer switch products, the warranty period is 24 months after date of delivery to the first user.
- For new CG132, CG170 and CG260 series power generation products the warranty period is 24 months after date of delivery to first user, but not to exceed 36 months from shipment from the Caterpillar place of manufacture.
- For electric power generation products other than CG132, CG170 and CG260 series in prime or continuous applications the warranty period is 12 months. For standby applications the warranty period is 24 months/1000 hours. For emergency standby applications the warranty period is 24 months/400 hours. All terms begin after date of delivery to the first user.
- For all other applications the warranty period is 12 months after date of delivery to the first user.

Caterpillar Responsibilities

If a defect in material or workmanship is found during the warranty period, Caterpillar will, during normal working hours and at a place of business of a Cat dealer or other source approved by Caterpillar:

- Provide (at Caterpillar's choice) new, Remanufactured, or Caterpillar approved repaired parts or assembled components needed to correct the defect.

Note: New, remanufactured, or Caterpillar approved repaired parts or assembled components provided under the terms of this warranty are warranted for the remainder of the warranty period applicable to the product in which installed as if such parts were original components of that product. Items replaced under this warranty become the property of Caterpillar.

- Replace lubricating oil, filters, coolant, and other service items made unusable by the defect.
- Provide reasonable and customary labor needed to correct the defect, including labor to disconnect the product from and reconnect the product to its attached equipment, mounting, and support systems, if required.

For new 3114, 3116, and 3126 engines and, new and Caterpillar rebuild electric power generation products (which includes the following: any new products of other manufacturers packaged and sold by Caterpillar)

- Provide travel labor, up to four hours round trip, if in the opinion of Caterpillar, the product cannot reasonably be transported to a place of business of a Cat dealer or other source approved by Caterpillar (travel labor in excess of four hours round trip, and any meals, mileage, lodging, etc. is the user's responsibility).

For all other products:

- Provide reasonable travel expenses for authorized mechanics, including meals, mileage, and lodging, when Caterpillar chooses to make the repair on-site.

User Responsibilities

The user is responsible for:

- Providing proof of the delivery date to the first user.
- Labor costs, except as stated under "Caterpillar Responsibilities," including costs beyond those required to disconnect the product from and reconnect the product to its attached equipment, mounting, and support systems.
- Travel or transporting costs, except as stated under "Caterpillar Responsibilities."
- Premium or overtime labor costs.
- Parts shipping charges in excess of those that are usual and customary.
- Local taxes, if applicable.
- Costs to investigate complaints, unless the problem is caused by a defect in Caterpillar material or workmanship.
- Giving timely notice of a warrantable failure and promptly making the product available for repair.
- Performance of the required maintenance (including use of proper fuel, oil, lubricants, and coolant) and items replaced due to normal wear and tear.
- Allowing Caterpillar access to all electronically stored data.

Limitations

Caterpillar is not responsible for:

- Failures resulting from any use or installation that Caterpillar judges improper.
- Failures resulting from attachments, accessory items, and parts not sold or approved by Caterpillar.
- Failures resulting from abuse, neglect, and/or improper repair.
- Failures resulting from user's delay in making the product available after being notified of a potential product problem.
- Failures resulting from unauthorized repairs or adjustments, and unauthorized fuel setting changes.
- Damage to parts, fixtures, housings, attachments, and accessory items that are not part of the engine, Cat Selective Catalytic Reduction System or electric power generation product (including any products of other manufacturers packaged and sold by Caterpillar).
- Repair of components sold by Caterpillar that is warranted directly to the user by their respective manufacturer. Depending on type of application, certain exclusions may apply. Consult your Cat dealer for more information.

(Continued on reverse side…)

This warranty covers every major component of the products. Claims under this warranty should be submitted to a place of business of a Cat dealer or other source approved by Caterpillar. For further information concerning either the location to submit claims or Caterpillar as the issuer of this warranty, write Caterpillar Inc., 100 N.E. Adams St., Peoria, IL USA 61629, telephone 1 (309) 675-1000, or go to URL, www.cat.com, Find Your Dealer.

Caterpillar's obligations under this Limited Warranty are subject to, and shall not apply in contravention of, the laws, rules, regulations, directives, ordinances, orders, or statutes of the United States, or of any other applicable jurisdiction, without recourse or liability with respect to Caterpillar.

A) For products operating outside of Australia, Fiji, Nauru, New Caledonia, New Zealand, Papua New Guinea, the Solomon Islands, and Tahiti, the following is applicable:

NEITHER THE FOREGOING EXPRESS WARRANTY NOR ANY OTHER WARRANTY BY CATERPILLAR, EXPRESS OR IMPLIED, IS APPLICABLE TO ANY ITEM CATERPILLAR SELLS THAT IS WARRANTED DIRECTLY TO THE USER BY ITS MANUFACTURER.

THIS WARRANTY IS EXPRESSLY IN LIEU OF ANY OTHER WARRANTIES, EXPRESS OR IMPLIED, INCLUDING ANY WARRANTY OF MERCHANTABILITY OR FITNESS FOR A PARTICULAR PURPOSE, EXCEPT CATERPILLAR EMISSION-RELATED COMPONENT WARRANTIES FOR NEW ENGINES, WHERE APPLICABLE. REMEDIES UNDER THIS WARRANTY ARE LIMITED TO THE PROVISION OF MATERIAL AND SERVICES, AS SPECIFIED HEREIN.

CATERPILLAR IS NOT RESPONSIBLE FOR INCIDENTAL OR CONSEQUENTIAL DAMAGES.

CATERPILLAR EXCLUDES ALL LIABILITY FOR OR ARISING FROM ANY NEGLIGENCE ON ITS PART OR ON THE PART OF ANY OF ITS EMPLOYEES, AGENTS, OR REPRESENTATIVES IN RESPECT OF THE MANUFACTURE OR SUPPLY OF GOODS OR THE PROVISION OF SERVICES RELATING TO THE GOODS.

IF OTHERWISE APPLICABLE, THE VIENNA CONVENTION ON CONTRACTS FOR THE INTERNATIONAL SALE OF GOODS IS EXCLUDED IN ITS ENTIRETY.

For personal or family use engines or electric power generation products, operating in the USA, its territories and possessions, some states do not allow limitations on how long an implied warranty may last nor allow the exclusion or limitation of incidental or consequential damages. Therefore, the previously expressed exclusion may not apply to you. This warranty gives you specific legal rights and you may also have other rights, which vary by jurisdiction. To find the location of the nearest Cat dealer or other authorized repair facility, call (800) 447-4986. If you have questions concerning this warranty or its applications, call or write:

In USA and Canada: Caterpillar Inc, 100 N.E. Adams St., Peoria, IL USA 61629, Attention: Customer Service Manager, Telephone 1 (309) 675-1000. Outside the USA and Canada: Contact your Cat dealer, go to URL, www.cat.com, Find Your Dealer.

B) For products operating in Australia, Fiji, Nauru, New Caledonia, New Zealand, Papua New Guinea, the Solomon Islands, and Tahiti, the following is applicable:

THIS WARRANTY IS IN ADDITION TO WARRANTIES AND CONDITIONS IMPLIED BY STATUTE AND OTHER STATUTORY RIGHTS AND OBLIGATIONS THAT BY ANY APPLICABLE LAW CANNOT BE EXCLUDED, RESTRICTED, OR MODIFIED ("MANDATORY RIGHTS"). ALL OTHER WARRANTIES OR CONDITIONS, EXPRESS OR IMPLIED (BY STATUTE OR OTHERWISE), ARE EXCLUDED. WITHOUT LIMITING THE FOREGOING PROVISIONS OF THIS PARAGRAPH, WHERE A PRODUCT IS SUPPLIED FOR BUSINESS PURPOSES, THE CONSUMER GUARANTEES UNDER THE CONSUMER GUARANTEES ACT 1993 (NZ) WILL NOT APPLY.

NEITHER THIS WARRANTY NOR ANY OTHER CONDITION OR WARRANTY BY CATERPILLAR, EXPRESS OR IMPLIED (SUBJECT ONLY TO THE MANDATORY RIGHTS), IS APPLICABLE TO ANY ITEM CATERPILLAR SELLS THAT IS WARRANTED DIRECTLY TO THE USER BY ITS MANUFACTURER.

IF THE MANDATORY RIGHTS MAKE CATERPILLAR LIABLE IN CONNECTION WITH SERVICES OR GOODS, THEN TO THE EXTENT PERMITTED UNDER THE MANDATORY RIGHTS, THAT LIABILITY SHALL BE LIMITED AT CATERPILLAR'S OPTION TO (a) IN THE CASE OF SERVICES, THE SUPPLY OF THE SERVICES AGAIN OR THE PAYMENT OF THE COST OF HAVING THE SERVICES SUPPLIED AGAIN AND (b) IN THE CASE OF GOODS, THE REPAIR OR REPLACEMENT OF THE GOODS, THE SUPPLY OF EQUIVALENT GOODS, THE PAYMENT OF THE COST OF SUCH REPAIR OR REPLACEMENT OR THE ACQUISITION OF EQUIVALENT GOODS.

CATERPILLAR EXCLUDES ALL LIABILITY FOR OR ARISING FROM ANY NEGLIGENCE ON ITS PART OR ON THE PART OF ANY OF ITS EMPLOYEES, AGENTS OR REPRESENTATIVES IN RESPECT OF THE MANUFACTURE OR SUPPLY OF GOODS OR THE PROVISION OF SERVICES RELATING TO THE GOODS.

CATERPILLAR IS NOT LIABLE FOR INCIDENTAL OR CONSEQUENTIAL DAMAGES UNLESS IMPOSED UNDER MANDATORY RIGHTS.

IF OTHERWISE APPLICABLE, THE VIENNA CONVENTION ON CONTRACTS FOR THE INTERNATIONAL SALE OF GOODS IS EXCLUDED IN ITS ENTIRETY.

C) For products supplied in Australia:

IF THE PRODUCTS TO WHICH THIS WARRANTY APPLIES ARE:

I. PRODUCTS OF A KIND ORDINARILY ACQUIRED FOR PERSONAL, DOMESTIC OR HOUSEHOLD USE OR CONSUMPTION; OR

II. PRODUCTS THAT COST AUD 100,000 OR LESS,

WHERE THOSE PRODUCTS WERE NOT ACQUIRED FOR THE PURPOSE OF RE-SUPPLY OR FOR THE PURPOSE OF USING THEM UP OR TRANSFORMING THEM IN THE COURSE OF PRODUCTION OR MANUFACTURE OR IN THE COURSE OF REPAIRING OTHER GOODS OR FIXTURES, THEN THIS SECTION C APPLIES.

THE FOLLOWING MANDATORY TEXT IS INCLUDED PURSUANT TO THE AUSTRALIAN CONSUMER LAW AND INCLUDES REFERENCES TO RIGHTS THE USER MAY HAVE AGAINST THE DIRECT SUPPLIER OF THE PRODUCTS: OUR GOODS COME WITH GUARANTEES THAT CANNOT BE EXCLUDED UNDER THE AUSTRALIAN CONSUMER LAW. YOU ARE ENTITLED TO A REPLACEMENT OR REFUND FOR A MAJOR FAILURE AND COMPENSATION FOR ANY OTHER REASONABLY FORESEEABLE LOSS OR DAMAGE. YOU ARE ALSO ENTITLED TO HAVE THE GOODS REPAIRED OR REPLACED IF THE GOODS FAIL TO BE OF ACCEPTABLE QUALITY AND THE FAILURE DOES NOT AMOUNT TO A MAJOR FAILURE. THE INCLUSION OF THIS TEXT DOES NOT CONSTITUTE ANY REPRESENTATION OR ACCEPTANCE BY CATERPILLAR OF LIABILITY TO THE USER OR ANY OTHER PERSON IN ADDITION TO THAT WHICH CATERPILLAR MAY HAVE UNDER THE AUSTRALIAN CONSUMER LAW.

TO THE EXTENT THE PRODUCTS FALL WITHIN THIS SECTION C BUT ARE NOT OF A KIND ORDINARILY ACQUIRED FOR PERSONAL, DOMESTIC OR HOUSEHOLD USE OR CONSUMPTION, CATERPILLAR LIMITS ITS LIABILITY TO THE EXTENT IT IS PERMITTED TO DO SO UNDER THE AUSTRALIAN CONSUMER LAW TO, AT ITS OPTION, THE REPAIR OR REPLACEMENT OF THE PRODUCTS, THE SUPPLY OF EQUIVALENT PRODUCTS, OR THE PAYMENT OF THE COST OF SUCH REPAIR OR REPLACEMENT OR THE ACQUISITION OF EQUIVALENT PRODUCTS.

THE WARRANTY SET OUT IN THIS DOCUMENT IS GIVEN BY CATERPILLAR INC. OR ANY OF ITS SUBSIDIARIES, 100 N. E. ADAMS ST, PEORIA, IL USA 61629, TELEPHONE 1 309 675 1000,THE USER IS RESPONSIBLE FOR ALL COSTS ASSOCIATED WITH MAKING A CLAIM UNDER THE WARRANTY SET OUT IN THIS DOCUMENT, EXCEPT AS EXPRESSLY STATED OTHERWISE IN THIS DOCUMENT, AND THE USER IS REFERRED TO THE BALANCE OF THE DOCUMENT TERMS CONCERNING CLAIM PROCEDURES, CATERPILLAR RESPONSIBILITIES AND USER RESPONSIBILITIES.

TO THE EXTENT PERMISSIBLE BY LAW, THE TERMS SET OUT IN THE REMAINDER OF THIS WARRANTY DOCUMENT (INCLUDING SECTION B) CONTINUE TO APPLY TO PRODUCTS TO WHICH THIS SECTION C APPLIES.

© 2023 Caterpillar. All Rights Reserved.
CAT, CATERPILLAR, LET'S DO THE WORK,
their respective logos, "Caterpillar Corporate Yellow", the "Power Edge" and Cat "Modern Hex"
trade dress as well as corporate and product identity used herein, are trademarks of Caterpillar and may not be used without permission.

QUINN POWER SYSTEMS

PARTS AND SERVICE STATEMENT

QUINN POWER SYSTEMS was organized on August 1, 2003 by the QUINN Company and is the only factory-authorized Caterpillar and Olympian Engine Distributor serving Los Angeles, Orange, and Inyo-Kern Counties in Southern California

QUINN POWER SYSTEMS is the successor to POWER SYSTEMS Associates, that was established in 1972 from the former Industrial Division of Shepherd Machinery Company. QUINN Company, serving Central California, was founded in 1919 and is the oldest Caterpillar dealer in California. We are Caterpillar's parts, service and sales representative.

QUINN POWER SYSTEMS offers genuine Caterpillar / Olympian parts and factory-trained mechanics. These are available on a 24-hour basis through our main office:

QUINN POWER SYSTEMS

PARTS AND SERVICE LOCATIONS

SELMA
Quinn Power Systems
10273 S. Golden State Blvd.
Selma, CA 93662-9410
P.O. Box 12625
Fresno, CA 93778-2625
(559) 891-6764

CORCORAN
Quinn Power Systems
510 Pickerell
Corcoran, CA 93212-1925
P.O. Box 578
Corcoran, CA 93212-0578
(559) 992-2193

CITY OF INDUSTRY
Quinn Power Systems
3500 Shepherd Street
City of Industry
562-463-6049

BAKERSFIELD
Quinn Power Systems
2200 Pegasus Dr.
Bakersfield, CA 93308-6801
Ph: (661)- 393-5800

OXNARD
Quinn Power Systems
801 Del Norte Blvd.
Oxnard, CA 93030-2692
P.O. Box 5227
Oxnard, CA 93031-5227
(805) 485-2171

RIVERSIDE
Quinn Power Systems
656 E La Cadena Drive
Riverside, CA 92507
(951) 683-5960

SALINAS
Quinn Power Systems
1300 Abbott Street
Salinas, CA 93901-4507
P.O. Box 1908
Salinas, CA 93902-1908
(831) 758-8461

SANTA MARIA
Quinn Power Systems
1655 N. Carlotti Drive
Santa Maria, CA 93454-1503
(805) 925-8611

PACKAGE WEIGHTS (ESTIMATES):

GENERATOR SET PACKAGE "DRY" WEIGHT	15,500 LBS.
333 GALLONS (USABLE) DIESEL FUEL	2,500 LBS.
TOTAL PACKAGE "WET" WEIGHT	18,000 LBS.

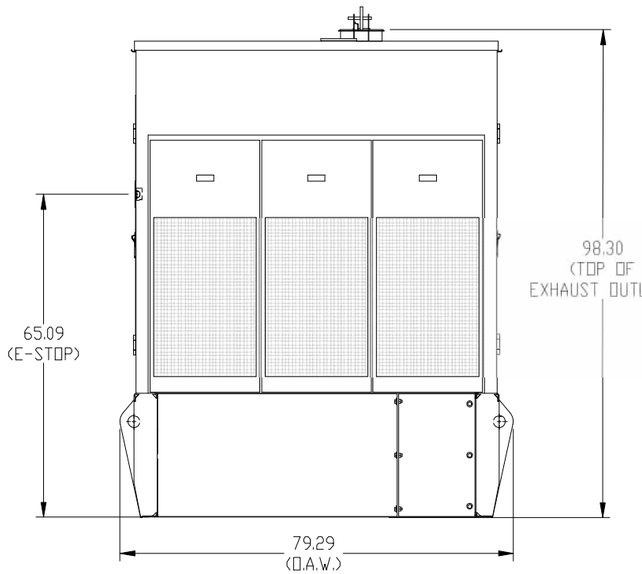

REAR VIEW

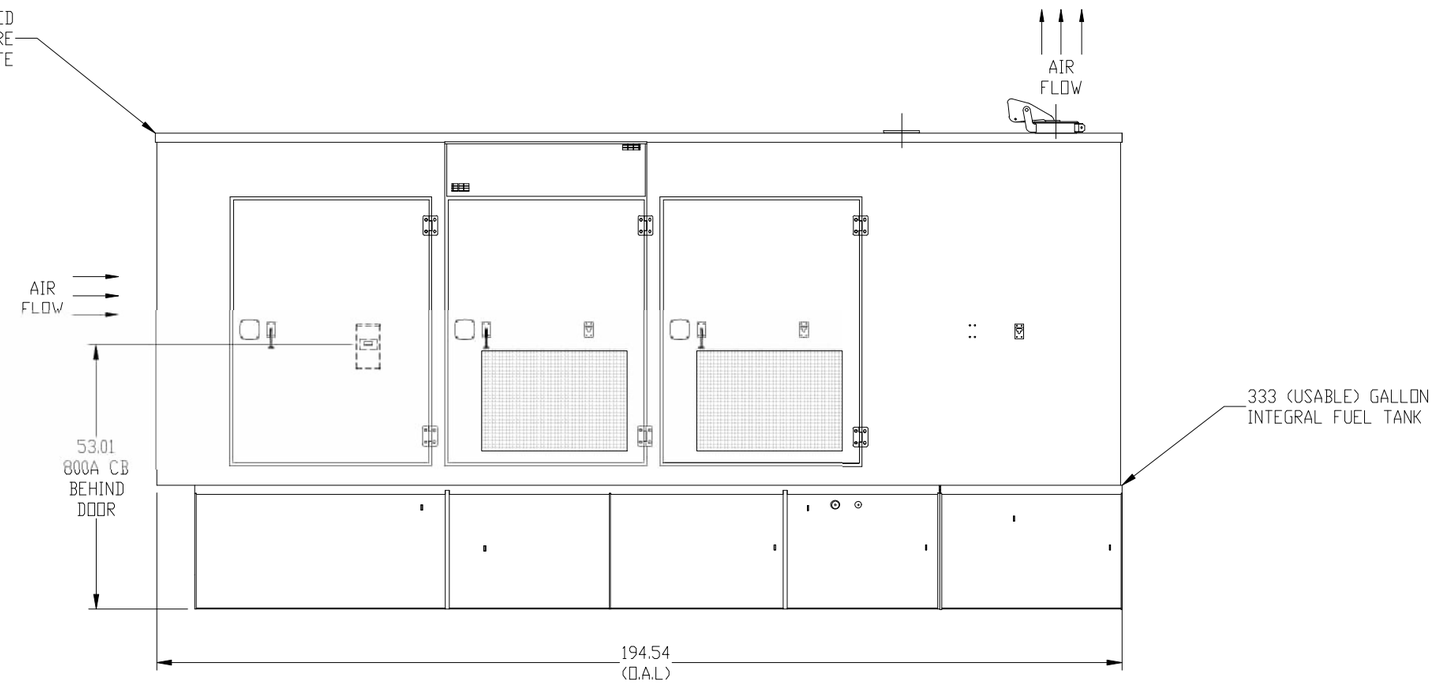

RIGHT SIDE VIEW

ITEM NO.	PART NO. OR SIZE	DRAWING NO.	NO. REQ'D	MATERIAL DESCRIPTION	REMARKS
3	LS-1429	449-9471	1	330 GALLON INTEGRAL TANK	CATERPILLAR
2	LS-4703	449-9471	1	LEVEL 1 SOUND ATTENUATED ENCLOSURE (WHITE)	CATERPILLAR
1	LS-1443	449-9471	1	C15 500KW, 277/480V 60HZ, 1800 RPM GENSET	CATERPILLAR

DRAWN D. URIARTE | DATE 11/14/2024

UNLESS NOTED OTHERWISE DIMENSIONS ARE IN INCHES

QUINN POWER SYSTEMS

656 E. LA CADENA DR
RIVERSIDE, CA 92507

TITLE
C15 500KW 277/480V 3-PHASE
GENERATOR SET

JOB: 240171
CITY OF REDLANDS - FIFTH AVE PS
STOCK NO. RE16826
SHEET 1 OF 3

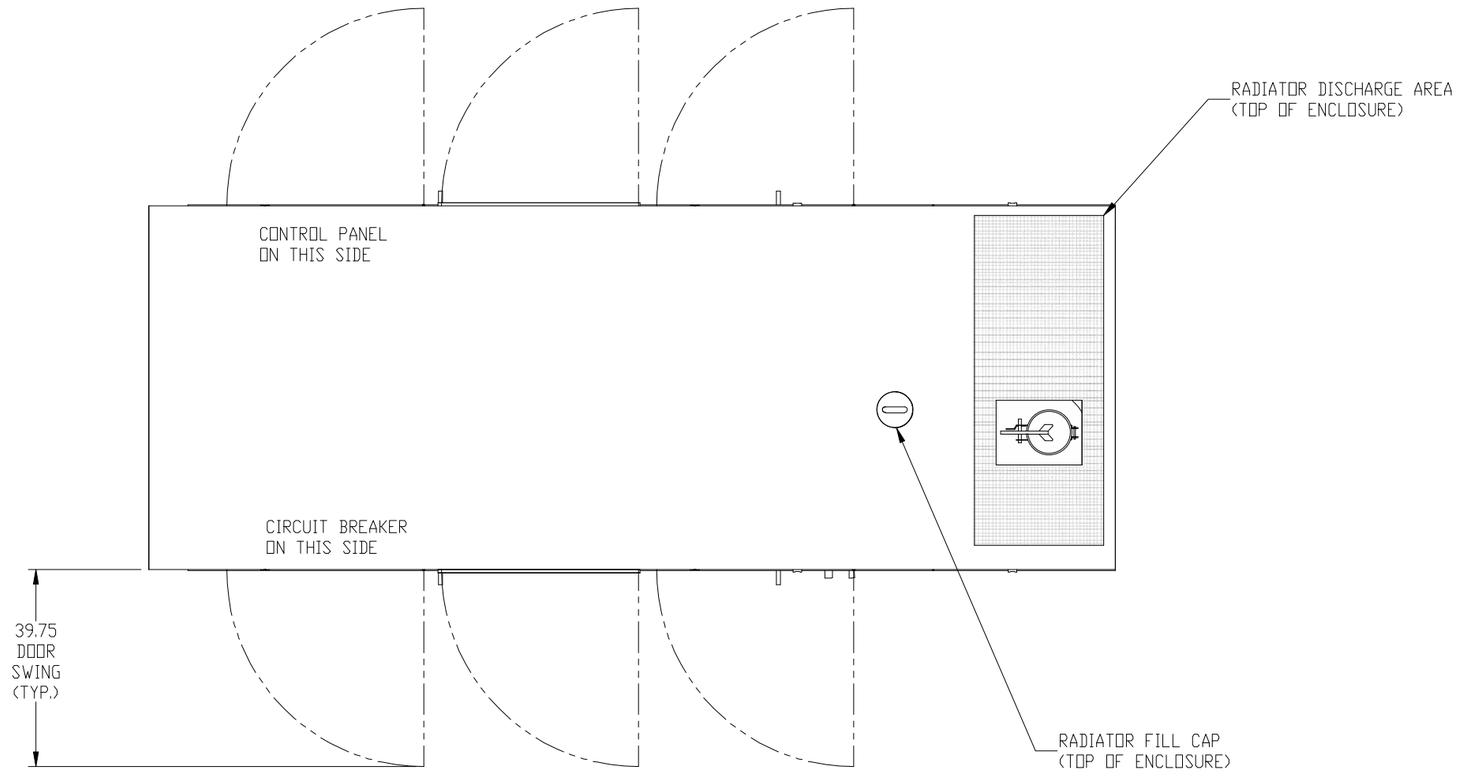

TOP VIEW

ITEM NO.	PART NO. OR SIZE	DRAWING NO.	NO. REQ'D	MATERIAL DESCRIPTION	REMARKS
3	LS-1429	449-9471	1	330 GALLON INTEGRAL TANK	CATERPILLAR
2	LS-4703	449-9471	1	LEVEL 1 SOUND ATTENUATED ENCLOSURE (WHITE)	CATERPILLAR
1	LS-1443	449-9471	1	C15 500KW, 277/480V 60HZ, 1800 RPM GENSET	CATERPILLAR

DRAWN D. URIARTE | DATE 11/14/2024

UNLESS NOTED OTHERWISE DIMENSIONS ARE IN INCHES

QUINN POWER SYSTEMS

656 E. LA CADENA DR
RIVERSIDE, CA 92507

TITLE
C15 500KW 277/480V 3-PHASE
GENERATOR SET

JOB: 240171
CITY OF REDLANDS - FIFTH AVE PS

STOCK NO. RE16826

SHEET 2 OF 3

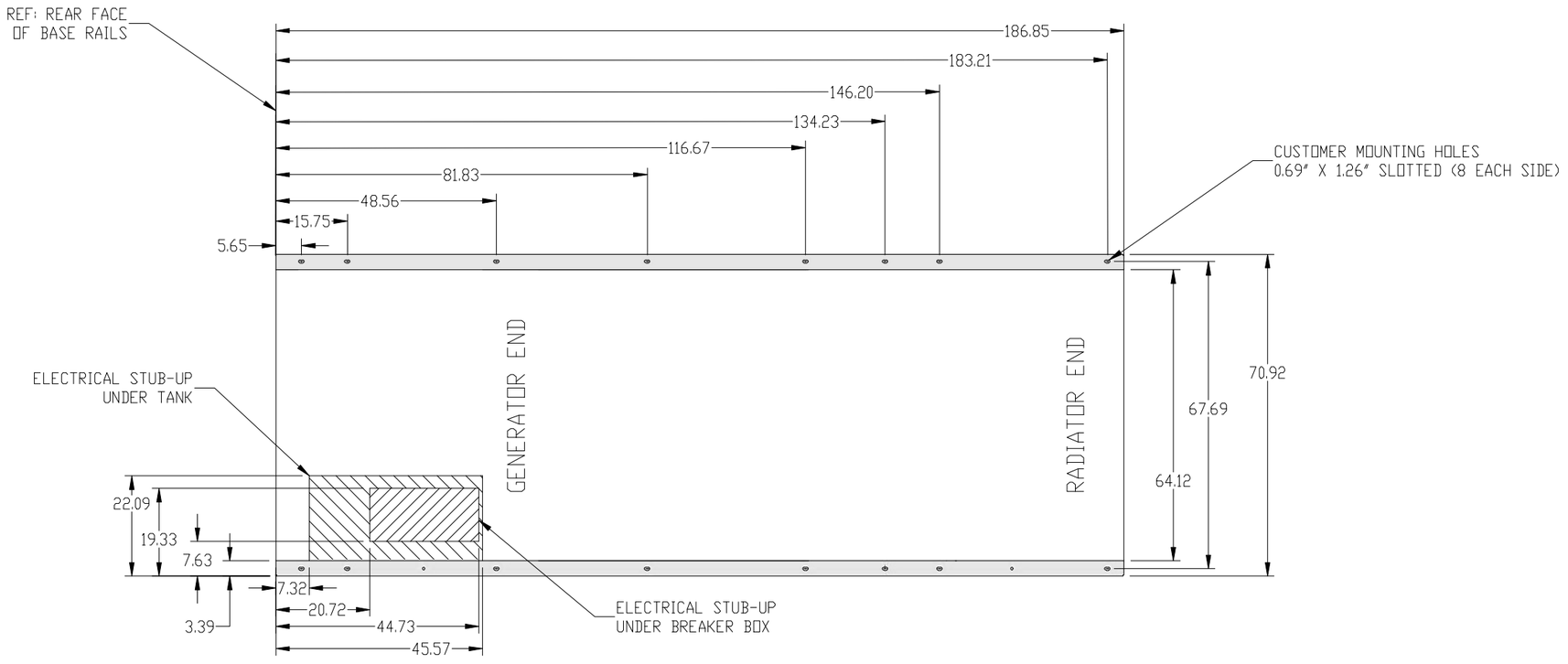

FOOTPRINT – STUB UP AND MOUNTING HOLES (TOP VIEW)

ITEM NO.	PART NO. OR SIZE	DRAWING NO.	NO. REQ'D	MATERIAL DESCRIPTION	REMARKS
3	LS-1429	449-9471	1	330 GALLON INTEGRAL TANK	CATERPILLAR
2	LS-4703	449-9471	1	LEVEL 1 SOUND ATTENUATED ENCLOSURE (WHITE)	CATERPILLAR
1	LS-1443	449-9471	1	C15 500KW, 277/480V 60HZ, 1800 RPM GENSET	CATERPILLAR

DRAWN D. URIARTE | DATE 11/14/2024

UNLESS NOTED OTHERWISE DIMENSIONS ARE IN INCHES

QUINN POWER SYSTEMS

656 E. LA CADENA DR
RIVERSIDE, CA 92507

TITLE
C15 500KW 277/480V 3-PHASE GENERATOR SET

JOB: 240171
CITY OF REDLANDS – FIFTH AVE PS

STOCK NO. RE16826

SHEET 3 OF 3

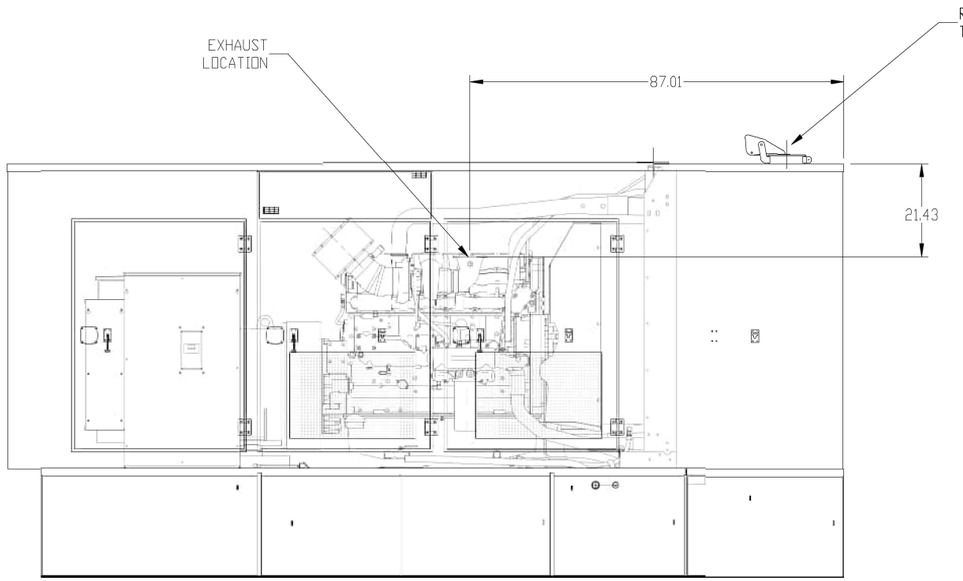

RIGHT SIDE VIEW – EXHAUST LOCATION

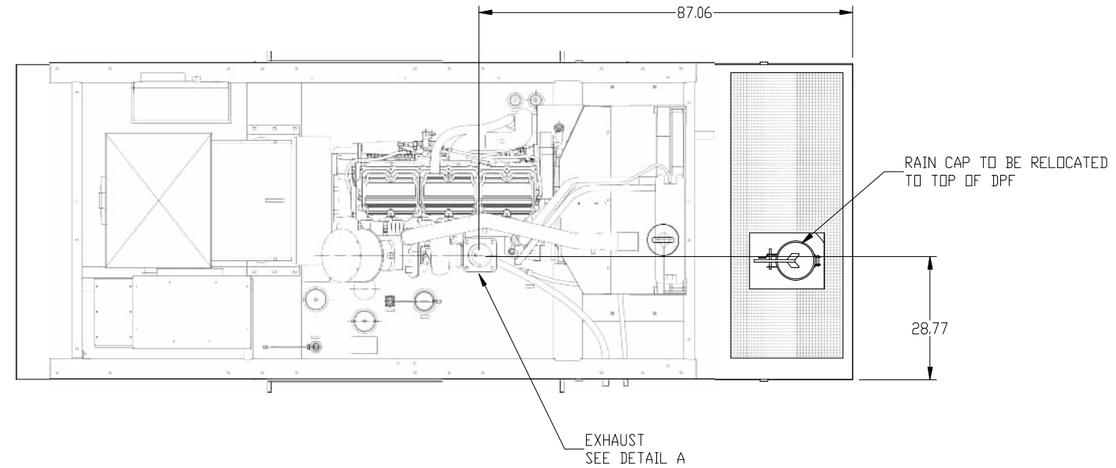

TOP VIEW – EXHAUST LOCATION

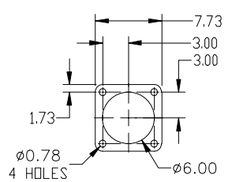

DETAIL A
SCALE 2:1

ITEM NO.	PART NO. OR SIZE	DRAWING NO.	NO. REQ'D	MATERIAL DESCRIPTION	REMARKS
3	LS-1429	449-9471	1	330 GALLON INTEGRAL TANK	CATERPILLAR
2	LS-4703	449-9471	1	LEVEL 1 SOUND ATTENUATED ENCLOSURE (WHITE)	CATERPILLAR
1	LS-1443	449-9471	1	C15 500KW, 277/480V 60HZ, 1800 RPM GENSET	CATERPILLAR

DRAWN D. URIARTE | DATE 08/08/2025

UNLESS NOTED OTHERWISE DIMENSIONS ARE IN INCHES

QUINN POWER SYSTEMS

656 E. LA CADENA DR
RIVERSIDE, CA 92507

TITLE
C15 500KW 277/480V 3-PHASE
GENERATOR SET

JOB: 240171
CITY OF REDLANDS – FIFTH AVE PS

STOCK NO. RE16826

SHEET 4 OF 4

CIRCUIT DESCRIPTION TABLE Model: 6339881.DGM

CIRCUIT #	COLOR	DESCRIPTION
12	WH	AREP 12
9	WH	AREP 9
10	WH	AREP 10
11	WH	AREP 11
14	WH	PMG A
16	WH	PMG C
15	WH	PMG B
14	WH	PMG A
A1	RD	ANALOG INPUT 1 (+)
A1	BK	ANALOG INPUT 1 (-)
A2	RD	ANALOG INPUT 2 (+)
A2	BK	ANALOG INPUT 2 (-)
SH1	CU	ANLG INP SHIELD 2
SH2	CU	ANLG INP SHIELD 1
F5	BU	EXCITER S+
F6	WH	EXCITER 6-
AC199	WH	AC NEUTRAL
AC200	GN	CUSTOMER AC GROUND
AC715	WH	CB--JWH L2 TO
AC707	WH	JWH RLY/ID HTR
AC701	WH	JWH RLY RD HTR L1
AC717	WH	CB--JWH L1 TO RLY
AC720	WH	CB--AUI L2 TO HTR
AC703	WH	ALT HTR RLY TO HTR L1
AC704	WH	RLY TO HTR L1
AC705	WH	RLY TO HTR L2
AC719	WH	CB--AUI L1 TO RLY
AC702	WH	AC LINE INPUT L2
AC101	WH	AC LINE INPUT L1
AC103	WH	CB TO RLY L1
AC104	WH	CB TO RLY L2
AC106	WH	GFCI L1
AC107	WH	GFCI L2
AC107	WH	CB TO L1
AC108	WH	POWER SUPPLY L1
AC109	WH	AC STANDARD L2
101	WH	UNFUSED BTRY (C)
103	WH	+24V BTRY (EMCP)
104	WH	+24V BTRY (ADEM)
106	WH	+24V
108	WH	ALTERNATOR
148	WH	+24V BATTERY
154	WH	POWER SUPPLY
200	WH	GROUND
203	WH	-24V BTRY (EMCP)
208	WH	-24V
229	WH	CLEAR GROUND
C149	WH	POWER SUPPLY 1
304	WH	ENGINE CRANK
344	WH	E-STOPS LINK 1
345	WH	E-STOPS LINK 2
347	WH	REMOTE E-STOP LINK
348	WH	REMOTE E-STOP
380	WH	ADEM KEY SWITCH
A308	WH	FUEL ENABLE
A338	WH	JWH REMOTE T-STAT SIGNAL
A339	WH	JWH REMOTE T-STAT
A380	SH	DISCRIMINATOR
F486	WH	SENSING VOLTAGE - PHASE A
F487	WH	SENSING VOLTAGE - PHASE B
F488	WH	SENSING VOLTAGE - PHASE C
F494	WH	CT SENSING - PHASE A
F495	WH	CT SENSING - PHASE B
F496	WH	CT SENSING - PHASE C
F497	WH	DROOP SENSING CT
F498	WH	CT RETURN COMMON
F409	WH	SENSING VOLTAGE NEUTRAL
F410	WH	DROOP SENSING CT RETURN
F412	WH	BUSS PHASE A
F413	WH	BUSS PHASE B
F430	WH	GROUND FAULT
F434	WH	GENERATOR PHASE A
F435	WH	GENERATOR PHASE B
F436	WH	GENERATOR PHASE C
D457	RD	RS485 ANN. B (+)
D458	BK	RS485 ANN. A (-)
D459	GY	RS485 ANN. REF
D410	WH	BUSS N
D419	WH	GND FAULT RESET N/C

CIRCUIT DESCRIPTION TABLE Model: 6339881.DGM

CIRCUIT #	COLOR	DESCRIPTION
D420	WH	GND FAULT 5 POLE SW LINK
F563	WH	MOTOR
E560	WH	RLY1 SPARE - CM
E561	WH	RLY1 SPARE - NC
E562	WH	RLY1 SPARE - NO
E563	WH	RLY8 SPARE - CM
E564	WH	RLY8 SPARE - NC
E565	WH	RLY8 SPARE - NO
F526	WH	HEATER/MOTOR RELAY
F547	SH	ANLG INP SHLD 3
F548	WH	+5V ANLG SNSR
A666	WH	LOUVER +
A667	WH	LIGHTS -
X774	WH	E-STOP
A779	WH	CB BELL ALARM N/O
A780	WH	CB BELL ALARM N/C
A782	WH	CB BELL ALARM COMMON
C722	WH	S-SPD
F703	BK	P-SPD
L759	WH	CB UNDER VOLTAGE SIGNAL TO CB
M755	GN	CAN (J1939) (+)
M756	YL	CAN (J1939) (+)
M757	SH	CAN (J1939) REF
M702	WH	PMG PHASE A / AREP 11
M703	WH	PMG PHASE B / AREP 9 / SH 14
M704	WH	PMG PHASE C / AREP 12
M705	WH	EXCITER (+)
M706	WH	EXCITER (-)
N713	WH	+/- TOVIC INPUT (A)
N714	WH	+/- TOVIC INPUT (B)
N715	WH	FAULT RESET
N716	WH	EXCITATION DISABLE
N717	WH	VAR/PF
N718	WH	VOLTAGE TRIMMER
N719	WH	VOLTS ADJUST/RAISE
N720	WH	VOLTS ADJUST
N722	WH	ALARM SIGNAL DRIVER
P755	WH	ANALOG INPUT 1 (+)
P756	WH	ANALOG INPUT 1 (-)
X709	WH	CKT BRKR AUX CONTACT (COMMON)
X710	WH	CKT BRKR AUX CONTACT (NO)
X711	WH	CKT BRKR AUX CONTACT (NC)
X713	WH	CKT BRKR CLOSE
879	WH	REMOTE START
892	GN	CAT DATA LINK (-)
893	YL	CAT DATA LINK (+)
P853	WH	BRKR SHUNT TRIP
P854	WH	BRKR SHUNT TRIP
E800	WH	STARTER MAGNETIC SWITCH CB
X881	WH	STARTER MAGNETIC SWITCH PSI
X863	WH	STARTER MAGNETIC COIL (+)
F874	WH	TIMER TO SWITCH +24V
J804	WH	FAIL SHUTDOWN
J805	WH	DRIVER BRKR RLY (50)
L803	WH	SPEED BRCK 1
L932	WH	SPEED BRCK 2
L941	WH	SPEED BRCK 3
L950	WH	MOTOR LIGHT ON (NC)
R951A	RD	DSENET A
R952A	BK	DSENET B
R953A	GY	DSENET SCR
R956	WH	RLY3 SPARE
R957	WH	RLY4 SPARE
R958	WH	RLY5 SPARE (COM 50)
R959	WH	RLY6 SPARE (GRR SM)
Y953	WH	DI-01 (LOW COOLANT)
Y954	WH	DI-02 (FUEL LEAK)
Y955	WH	DI-03 SPARE
Y956	WH	DI-04 SPARE
Y957	WH	DI-05 SPARE (BTRY CHGR FAIL)
Y958	WH	DI-06 SPARE (GND FAULT)

HARNESS DESCRIPTION TABLE

IDENT	PART NUMBER	DESCRIPTION
AH	399-9190	ALTERNATOR SPACE HEATER HARNESS
AN	834-2464	LOCAL ANNUNCIATOR HARNESS
AX	399-9196	CB AUX CONTACTS HARNESS
CA	502-8965	MOTORIZED DAMPERS HARNESS-C13 & C9
CC	502-8963	SOURCE LIGHTS HARNESS
CD	502-8963	20A GFCI (POWER CENTER) HARNESS
CE	502-8966	20A GFCI (CONTROL) HARNESS
CF	502-8964	ENCLOSURE SPACE HEATER HARNESS
CG	502-8968	COLD WEATHER BATTERY
CH	502-8970	MOTORIZED DAMPERS HARNESS-C15 & C18
CK	502-8094	MOTORIZED DAMPER SWITCH HARNESS
CW	502-8981	LOAD CENTER HARNESS
EM	834-3093	D350/R450 JUMPER HARNESS
EN	390-7198	ENGINE INTERFACE HARNESS
EN	449-0636	ENGINE HARNESS (C9 ENGINE)
EP	N/A	EPIC FIELD INTERCONNECTION
ER	399-9218	BATTERY CHARGER HARNESS
ET	634-2739	ENCLOSURE E-STOP HARNESS
VS	834-3207	D350/R450 VOLT SENSING HARNESS
FT	399-9201	SHUNT TRIP CONTROL HARNESS
FL	399-9200	FUEL TANK OPTIONS HARNESS
FT	389-9202	SHUNT TRIP HARNESS
GR	389-9204	GEN ALARM RELAYS HARNESS
PX	443-0637	AVR WITH PMG
PL	833-9647	GCCP1.2 INTERFACE HARNESS
C	578-6063	REMOTE ANNUNCIATOR HARNESS
RC	399-9210	SHORE POWER CONTROL
RF	389-9197	R-FRAME HARNESS
VA	389-9216	AC SENSING HARNESS
JK	121-1365	LOW COOLANT LVL HARNESS
SM	525-8343	JUMPER HARNESS STARTER MOTOR C18PD
T	541-1578	PL66xx HARNESS

SYMBOL	DESCRIPTION	ABBREV	COLOR
●	BLADE, SPADE, RING, OR SCREW TERMINAL	RD	RED
		WH	WHITE
		OR	ORANGE
	CIRCUIT CONNECTED	YL	YELLOW
	CIRCUIT NOT CONNECTED	CL	CLEAR
		BK	BLACK
	EARTH GROUND	GY	GRAY
		CU	COPPER
	CONNECTOR	BR	BROWN
	MULTI-CONDUCTOR CABLE	GN	GREEN
		BU	BLUE
		GN_YL	GREEN/YELLOW
		VI	VIOLET
	NORMALLY CLOSED CIRCUIT	BK_WH	BLACK/WHITE
	NORMALLY OPEN CIRCUIT		

METRIC 6339881

INDEX TABLE

SHEET INDEX	DESCRIPTION
1	CROSS REF, SHEET INDEX & NOTES
2	COMPONENT LAYOUT
3	CUSTOMER CONNECTION
4	AC-WIRING
5	INPUT/OUTPUT - WIRING
6	ENGINE INTERFACE - WIRING
7	COMMUNICATION - WIRING
8	DC/CIRCUIT BREAKERS OPTIONAL - WIRING
9	OPTIONS- GROUND FAULT & PUMP STYLE JWH
10	BTRY CHARGER OPTIONAL
11	TELEMATICS PLG601 & PLG641
12	COLD WEATHER OPTIONAL-C13 & C9
13	COLD WEATHER OPTIONAL-C15 & C18

WIRE NAME DEFINITION:
XXXX-XX# XX-XX-XX-UL
- WIRE GAUGE
- WIRE COLOR
- WIRE NUMBER
- HARNESS IDENT
- CIRCUIT IDENT

NOTE A: REMOVE AND DISCARD THIS JUMPER WHEN INSTALLING REMOTE E-STOP OPTION, REPLACE WITH REMOTE E-STOP WIRES

NOTE B: REMOVE AND DISCARD THIS JUMPER WHEN INSTALLING ENCLOSURE E-STOP, REPLACE WITH ENCLOSURE E-STOP WIRES.

NOTE C: TERMINAL BLOCK TB1 IS FOR 250 A TO 800 A CIRCUIT BREAKERS AND IS LOCATED EXTERNAL TO THE CIRCUIT BREAKER. 1200 A CIRCUIT BREAKER HAS TERMINALS LOCATED ON THE CIRCUIT BREAKER. SECOND BREAKER (250 A-800 A) USES THE SECOND SET OF AUX AND SHUNT HARNESS.

NOTE D: USE PIN 24 WITH SECOND CIRCUIT BREAKER

NOTE E: SUPPLY APPROPRIATE VOLTAGE AND SIZE THE WIRE AWG ACCORDINGLY

NOTE F: RELOCATE TERMINATING RESISTOR FROM TERMINAL STRIP TO FURTHEST REMOTE ANNUNCIATOR OR REMOTE I/O MODULE TO EXTEND ACCESSORY DATA LINK TO ADD REMOTE ANNUNCIATOR(S) AND REMOTE I/O MODULES.

CROSS REF, SHEET INDEX & NOTES

REV		
	1E5167A	INT-PROP
	1E2722F	DRAWING
	1ED198W	BRAND MARKINGS
	1ED013Y	CONFIDENTIALITY
	1ED012A	INTERPRETATION
b	1E0011	INTPR & TOL
c	Caterpillar: Confidential Yellow	

PROD. | OTHR | RECORDS

UNLESS OTHERWISE SPECIFIED DIMENSIONS ARE IN mm DIMENSIONS A/D TOL ARE BASIC

VENDOR TYPE: PRIMARY X SECONDARY

THIRD ANGLE PROJECTION

SHEET 1 OF 13

SIZE: D DRAWING: W973

CATERPILLAR

DIAGRAM-WIRING
(GCCP1.2)

6339881 REV - SHT 00 E

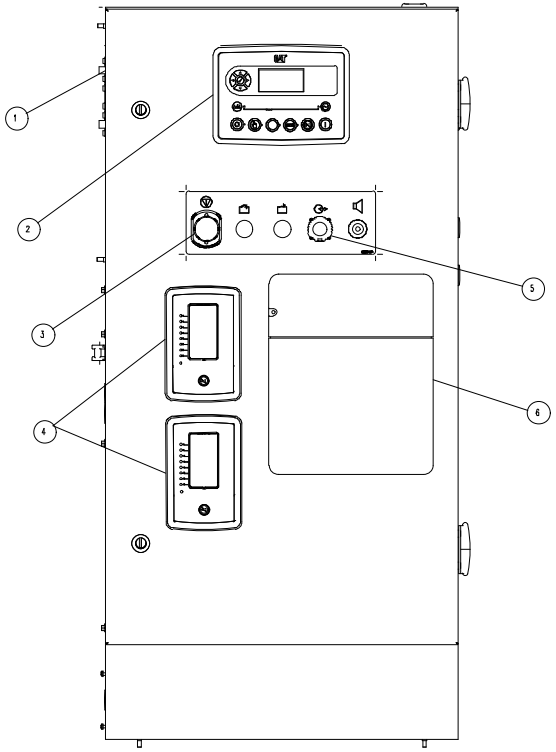

CONTROL PANEL
FRONT VIEW

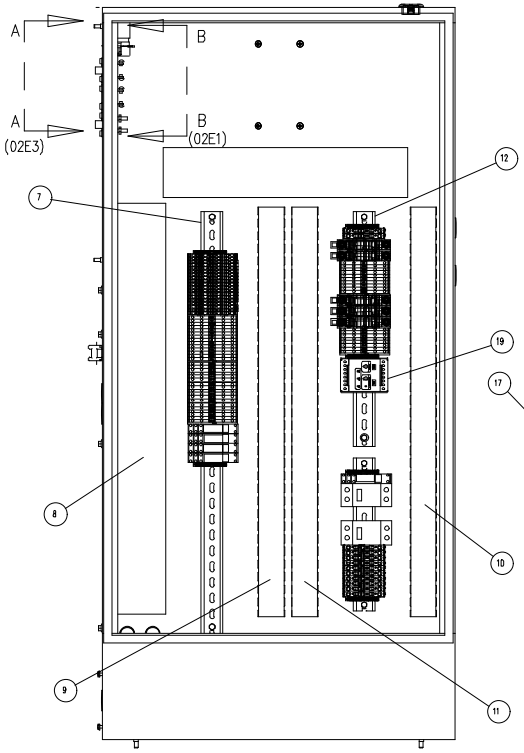

CONTROL PANEL
INSIDE VIEW

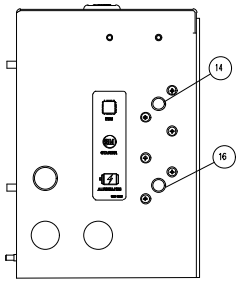

VIEW A–A
(DC–POWER DISTRIBUTION)
(CIRCUIT BREAKERS)
(02E5)

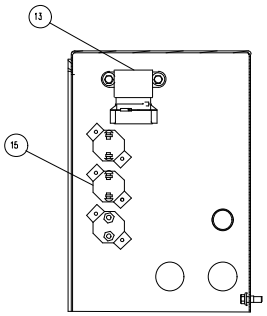

VIEW B–B
(DC–POWER DISTRIBUTION)
(CIRCUIT BREAKERS)
(02E5)

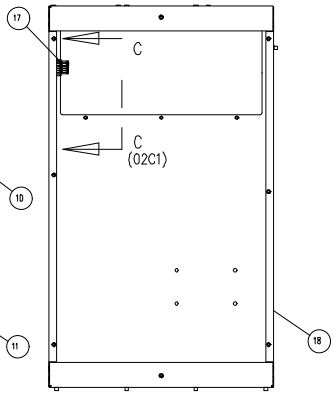

BREAKER BOX

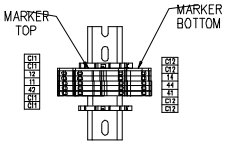

SECTION C–C
(SHUNT TRIP CB & AUX CONTACTS)
(374–5756 & 615–7965)
(02C3)

1 GCCP 1.2 CONTROL PANEL
2 GCCP 1.2 CONTROLLER
3 ESTOP PUSH BUTTON
4 DSE2548 ANNUNCIATOR (OPTIONAL)
5 SERVICE TOOL CONNECTOR
6 DOCUMENT HOLDER
7 LOW ENERGY TERMINAL STRIP (DI,DO,RO,AI)
8 LOW ENERGY–DC CONTROL PANEL WIRING DUCT
9 LOW ENERGY–DC CUSTOMER WIRING DUCT
10 HIGH ENERGY AC/DC CONTROL PANEL WIRING DUCT
11 HIGH ENERGY AC/DC CUSTOMER CONNECTION DUCT
12 HIGH ENERGY TERMINAL AC/DC STRIP
13 SMMS RELAY
14 CIRCUIT BREAKER–ECM
15 CIRCUIT BREAKER–STARTER
16 CIRCUIT BREAKER–ALTERNATOR
17 BREAKER TERMINAL STRIP (OPTIONAL BREAKER)
18 BREAKER BOX
19 OPTIONAL GROUND FAULT RELAY

FOR NOTES SEE SHEET 1

COMPONENT LAYOUT

METRIC 6339881

	1E5167A	INT–PROP
	1E2722F	DRAWING
	1E0198W	BRAND MARKINGS
	1E0013Y	CONFIDENTIALITY
	1E0012A	INTERPRETATION
REV	1E0011	INTPR & TOL
C	Caterpillar: Confidential Yellow	

PROD. OTHER RECORDS

UNLESS OTHERWISE SPECIFIED DIMENSIONS ARE IN mm DIMENSIONS A/D TOL ARE BASIC

VERSION TYPE: PRIMARY X SECONDARY

THIRD ANGLE PROJECTION

SHEET 2 OF 13

ENG CONTROL W973

CATERPILLAR

DIAGRAM–WIRING
(GCCP1,2)

6339881 DASH – SHG 00 E

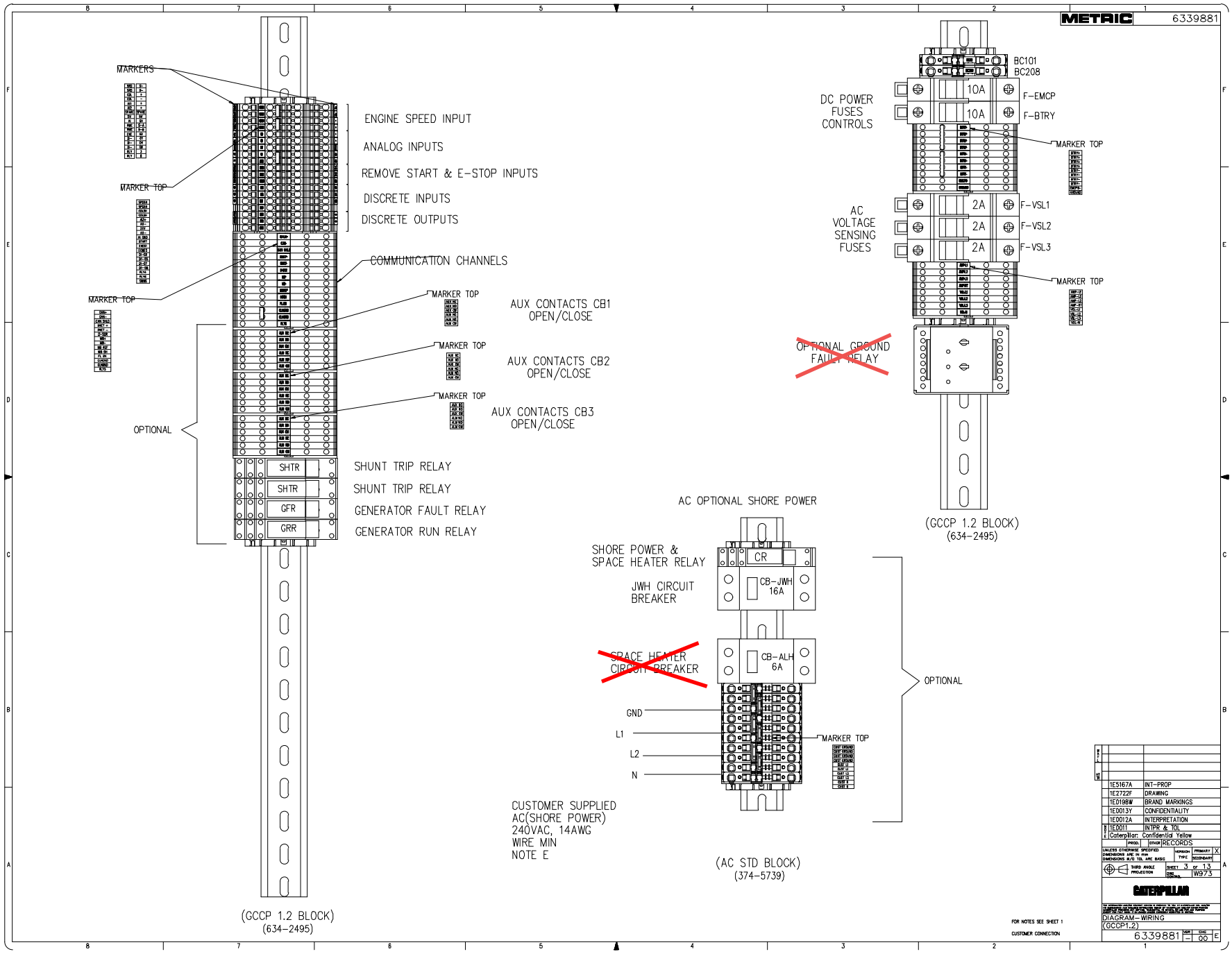
METRIC
6339881
MARKERS
MARKER TOP
MARKER TOP
ENGINE SPEED INPUT
ANALOG INPUTS
REMOVE START & E-STOP INPUTS
DISCRETE INPUTS
DISCRETE OUTPUTS
COMMUNICATION CHANNELS
MARKER TOP
AUX CONTACTS CB1 OPEN/CLOSE
MARKER TOP
AUX CONTACTS CB2 OPEN/CLOSE
MARKER TOP
AUX CONTACTS CB3 OPEN/CLOSE
OPTIONAL
SHTR
SHTR
GFR
GRR
SHUNT TRIP RELAY
SHUNT TRIP RELAY
GENERATOR FAULT RELAY
GENERATOR RUN RELAY
(GCCP 1.2 BLOCK)
(634-2495)
BC101
BC208
DC POWER FUSES CONTROLS
10A
F-EMCP
10A
F-BTRY
MARKER TOP
AC VOLTAGE SENSING FUSES
2A
F-VSL1
2A
F-VSL2
2A
F-VSL3
MARKER TOP
OPTIONAL GROUND FAULT RELAY
(GCCP 1.2 BLOCK)
(634-2495)
AC OPTIONAL SHORE POWER
SHORE POWER & SPACE HEATER RELAY
CR
JWH CIRCUIT BREAKER
CB-JWH 16A
SPACE HEATER CIRCUIT BREAKER
CB-ALH 6A
OPTIONAL
GND
L1
L2
N
MARKER TOP
CUSTOMER SUPPLIED AC(SHORE POWER) 240VAC, 14AWG WIRE MIN NOTE E
(AC STD BLOCK)
(374-5739)
FOR NOTES SEE SHEET 1
CUSTOMER CONNECTION
1E5167A INT-PROP
1E2722F DRAWING
1ED198W BRAND MARKINGS
1ED013Y CONFIDENTIALITY
1ED012A INTERPRETATION
1E0011 INTPR & TOL
Caterpillar: Confidential Yellow
RECORDS
PRIMARY
SECONDARY
SHEET 3 OF 13
W973
CATERPILLAR
DIAGRAM-WIRING
(GCCP1.2)
6339881
00

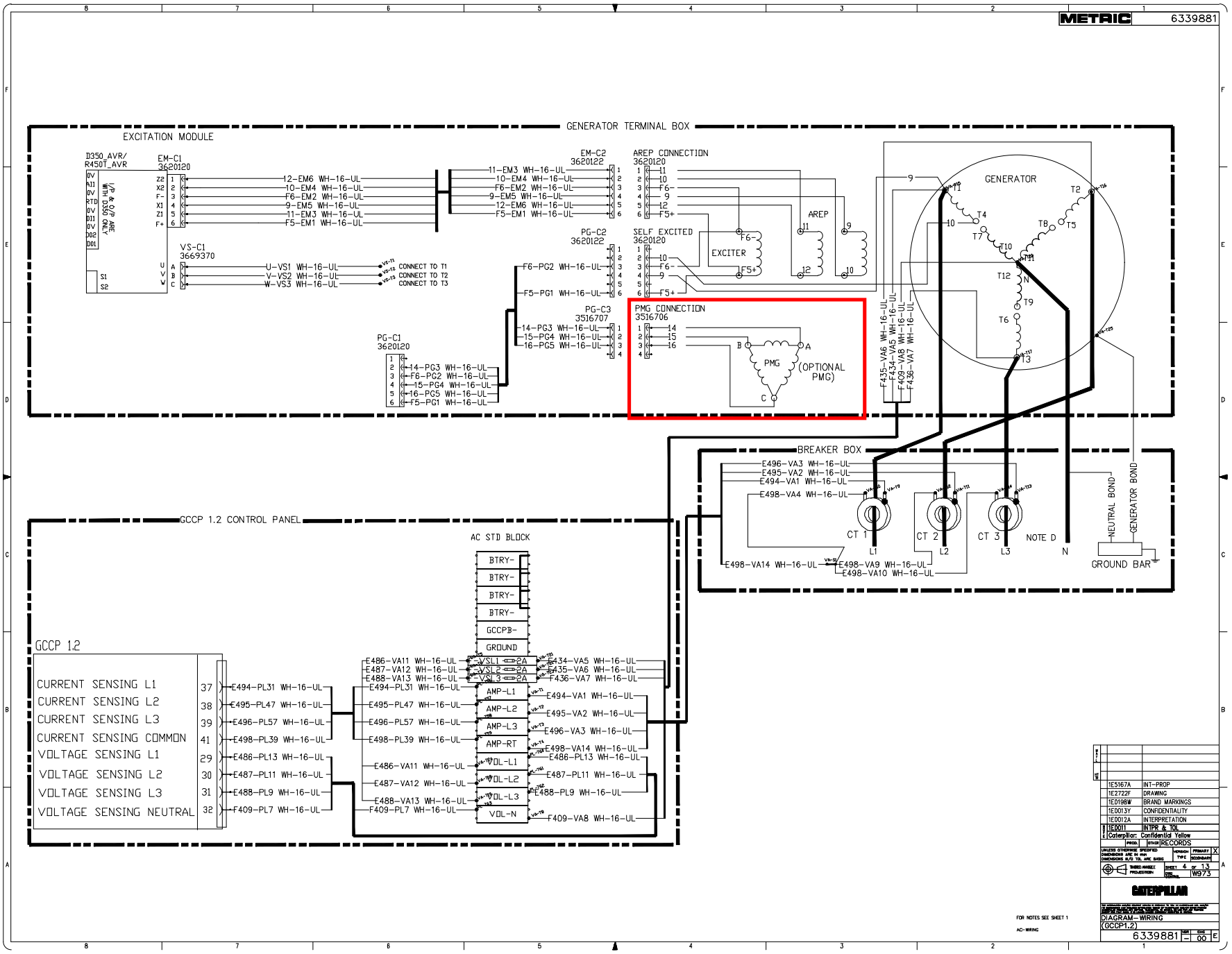
METRIC
6339881
GENERATOR TERMINAL BOX
EXCITATION MODULE
D350_AVR/
R450T_AVR
EM-C1
3620120
VS-C1
3669370
EM-C2
3620122
PG-C2
3620122
PG-C3
3516707
PG-C1
3620120
AREP CONNECTION
3620120
SELF EXCITED
3620120
EXCITER
AREP
PMG CONNECTION
3516706
PMG
(OPTIONAL
PMG)
GENERATOR
BREAKER BOX
CT 1
CT 2
CT 3
NOTE D
NEUTRAL BOND
GENERATOR BOND
GROUND BAR
GCCP 1.2 CONTROL PANEL
AC STD BLOCK
GCCP 1.2
CURRENT SENSING L1
CURRENT SENSING L2
CURRENT SENSING L3
CURRENT SENSING COMMON
VOLTAGE SENSING L1
VOLTAGE SENSING L2
VOLTAGE SENSING L3
VOLTAGE SENSING NEUTRAL
BTRY-
GCCPB-
GROUND
AMP-L1
AMP-L2
AMP-L3
AMP-RT
VOL-L1
VOL-L2
VOL-L3
VOL-N
1E5167A INT-PROP
1E2722F DRAWING
1E0198W BRAND MARKINGS
1E0013Y CONFIDENTIALITY
1E0012A INTERPRETATION
1E0011 INTPR & TOL
Caterpillar: Confidential Yellow
RECORDS
CATERPILLAR
DIAGRAM-WIRING
(GCCP1.2)
6339881

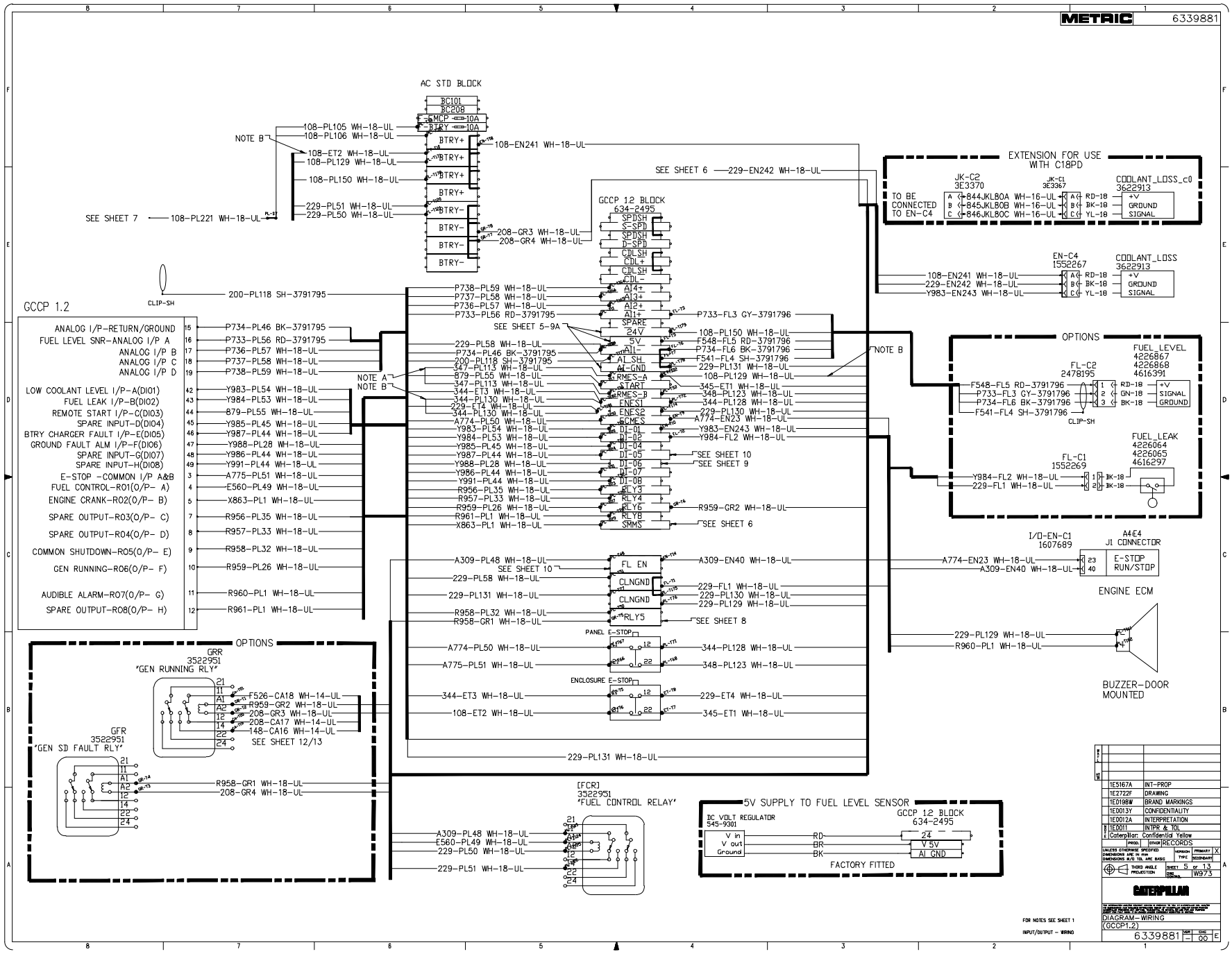
METRIC
6339881
AC STD BLOCK
BC101
BC208
MCP 10A
BTRY 10A
BTRY+
BTRY-
108-PL105 WH-18-UL
108-PL106 WH-18-UL
NOTE B
108-ET2 WH-18-UL
108-PL129 WH-18-UL
108-PL150 WH-18-UL
229-PL51 WH-18-UL
229-PL50 WH-18-UL
SEE SHEET 7
108-PL221 WH-18-UL
108-EN241 WH-18-UL
208-GR3 WH-18-UL
208-GR4 WH-18-UL
SEE SHEET 6
229-EN242 WH-18-UL
GCCP 12 BLOCK
634-2495
SPDSH
S-SPD
SPDSH
D-SPD
CDLSH
CDL+
CDLSH
CDL-
CLIP-SH
200-PL118 SH-3791795
GCCP 1.2
ANALOG I/P-RETURN/GROUND
FUEL LEVEL SNR-ANALOG I/P A
ANALOG I/P B
ANALOG I/P C
ANALOG I/P D
LOW COOLANT LEVEL I/P-A(DI01)
FUEL LEAK I/P-B(DI02)
REMOTE START I/P-C(DI03)
SPARE INPUT-D(DI04)
BTRY CHARGER FAULT I/P-E(DI05)
GROUND FAULT ALM I/P-F(DI06)
SPARE INPUT-G(DI07)
SPARE INPUT-H(DI08)
E-STOP -COMMON I/P A&B
FUEL CONTROL-R01(O/P- A)
ENGINE CRANK-R02(O/P- B)
SPARE OUTPUT-R03(O/P- C)
SPARE OUTPUT-R04(O/P- D)
COMMON SHUTDOWN-R05(O/P- E)
GEN RUNNING-R06(O/P- F)
AUDIBLE ALARM-R07(O/P- G)
SPARE OUTPUT-R08(O/P- H)
P734-PL46 BK-3791795
P733-PL56 RD-3791795
P736-PL57 WH-18-UL
P737-PL58 WH-18-UL
P738-PL59 WH-18-UL
Y983-PL54 WH-18-UL
Y984-PL53 WH-18-UL
879-PL55 WH-18-UL
Y985-PL45 WH-18-UL
Y987-PL44 WH-18-UL
Y988-PL28 WH-18-UL
Y986-PL44 WH-18-UL
Y991-PL44 WH-18-UL
A775-PL51 WH-18-UL
E560-PL49 WH-18-UL
X863-PL1 WH-18-UL
R956-PL35 WH-18-UL
R957-PL33 WH-18-UL
R958-PL32 WH-18-UL
R959-PL26 WH-18-UL
R960-PL1 WH-18-UL
R961-PL1 WH-18-UL
P738-PL59 WH-18-UL
P737-PL58 WH-18-UL
P736-PL57 WH-18-UL
P733-PL56 RD-3791795
AI4+
AI3+
AI2+
AI1+
SPARE
24V
5V
AI1-
AI_SH
AI-GND
RMES-A
START
RMES-B
ENES1
ENES2
SCMES
DI-01
DI-02
DI-04
DI-05
DI-06
DI-07
DI-08
RLY3
RLY4
RLY6
RLY8
SMMS
P733-FL3 GY-3791796
108-PL150 WH-18-UL
F548-FL5 RD-3791796
P734-FL6 BK-3791796
F541-FL4 SH-3791796
229-PL131 WH-18-UL
108-PL129 WH-18-UL
345-ET1 WH-18-UL
348-PL123 WH-18-UL
344-PL128 WH-18-UL
229-PL130 WH-18-UL
A774-EN23 WH-18-UL
Y983-EN243 WH-18-UL
Y984-FL2 WH-18-UL
SEE SHEET 10
SEE SHEET 9
SEE SHEET 6
NOTE A
NOTE B
229-PL58 WH-18-UL
P734-PL46 BK-3791795
200-PL118 SH-3791795
347-PL113 WH-18-UL
879-PL55 WH-18-UL
347-PL113 WH-18-UL
344-ET3 WH-18-UL
344-PL130 WH-18-UL
229-ET4 WH-18-UL
344-PL130 WH-18-UL
A774-PL50 WH-18-UL
Y983-PL54 WH-18-UL
Y984-PL53 WH-18-UL
Y985-PL45 WH-18-UL
Y987-PL44 WH-18-UL
Y988-PL28 WH-18-UL
Y986-PL44 WH-18-UL
Y991-PL44 WH-18-UL
R956-PL35 WH-18-UL
R957-PL33 WH-18-UL
R959-PL26 WH-18-UL
R961-PL1 WH-18-UL
X863-PL1 WH-18-UL
R959-GR2 WH-18-UL
A309-PL48 WH-18-UL
SEE SHEET 10
229-PL58 WH-18-UL
229-PL131 WH-18-UL
R958-PL32 WH-18-UL
R958-GR1 WH-18-UL
FL EN
CLNGND
CLNGND
RLY5
A309-EN40 WH-18-UL
229-FL1 WH-18-UL
229-PL130 WH-18-UL
229-PL129 WH-18-UL
SEE SHEET 8
PANEL E-STOP
A774-PL50 WH-18-UL
A775-PL51 WH-18-UL
344-PL128 WH-18-UL
348-PL123 WH-18-UL
ENCLOSURE E-STOP
344-ET3 WH-18-UL
108-ET2 WH-18-UL
229-ET4 WH-18-UL
345-ET1 WH-18-UL
229-PL131 WH-18-UL
EXTENSION FOR USE WITH C18PD
JK-C2
3E3370
JK-C1
3E3367
COOLANT_LOSS_C0
3622913
TO BE CONNECTED TO EN-C4
844JKL80A WH-16-UL
845JKL80B WH-16-UL
846JKL80C WH-16-UL
RD-18
BK-18
YL-18
+V
GROUND
SIGNAL
EN-C4
1552267
COOLANT_LOSS
3622913
108-EN241 WH-18-UL
229-EN242 WH-18-UL
Y983-EN243 WH-18-UL
OPTIONS
FUEL_LEVEL
4226867
4226868
4616391
FL-C2
2478195
F548-FL5 RD-3791796
P733-FL3 GY-3791796
P734-FL6 BK-3791796
F541-FL4 SH-3791796
CLIP-SH
RD-18
GN-18
BK-18
+V
SIGNAL
GROUND
FUEL_LEAK
4226064
4226065
4616297
FL-C1
1552269
Y984-FL2 WH-18-UL
229-FL1 WH-18-UL
I/O-EN-C1
1607689
A4-E4
J1 CONNECTOR
A774-EN23 WH-18-UL
A309-EN40 WH-18-UL
E-STOP
RUN/STOP
ENGINE ECM
229-PL129 WH-18-UL
R960-PL1 WH-18-UL
BUZZER-DOOR MOUNTED
OPTIONS
GRR
3522951
"GEN RUNNING RLY"
F526-CA18 WH-14-UL
R959-GR2 WH-18-UL
208-GR3 WH-18-UL
208-CA17 WH-14-UL
148-CA16 WH-14-UL
SEE SHEET 12/13
GFR
3522951
"GEN SD FAULT RLY"
R958-GR1 WH-18-UL
208-GR4 WH-18-UL
[FCR]
3522951
"FUEL CONTROL RELAY"
A309-PL48 WH-18-UL
E560-PL49 WH-18-UL
229-PL50 WH-18-UL
229-PL51 WH-18-UL
5V SUPPLY TO FUEL LEVEL SENSOR
DC VOLT REGULATOR
545-9301
V in
V out
Ground
RD
BR
BK
GCCP 12 BLOCK
634-2495
24
V 5V
AI GND
FACTORY FITTED
1E5167A INT-PROP
1E2722F DRAWING
1E0198W BRAND MARKINGS
1E0013Y CONFIDENTIALITY
1E0012A INTERPRETATION
1E0011 INTPR & TOL
Caterpillar: Confidential Yellow
PROD. RECORDS
UNLESS OTHERWISE SPECIFIED
DIMENSIONS ARE IN mm
DIMENSIONS A/D TOL ARE BASIC
THIRD ANGLE PROJECTION
SHEET 5 OF 13
DRG NO. W973
CATERPILLAR
DIAGRAM-WIRING
(GCCP1.2)
6339881
DRAWING NO.
SHEET NO.
00
FOR NOTES SEE SHEET 1
INPUT/OUTPUT - WIRING

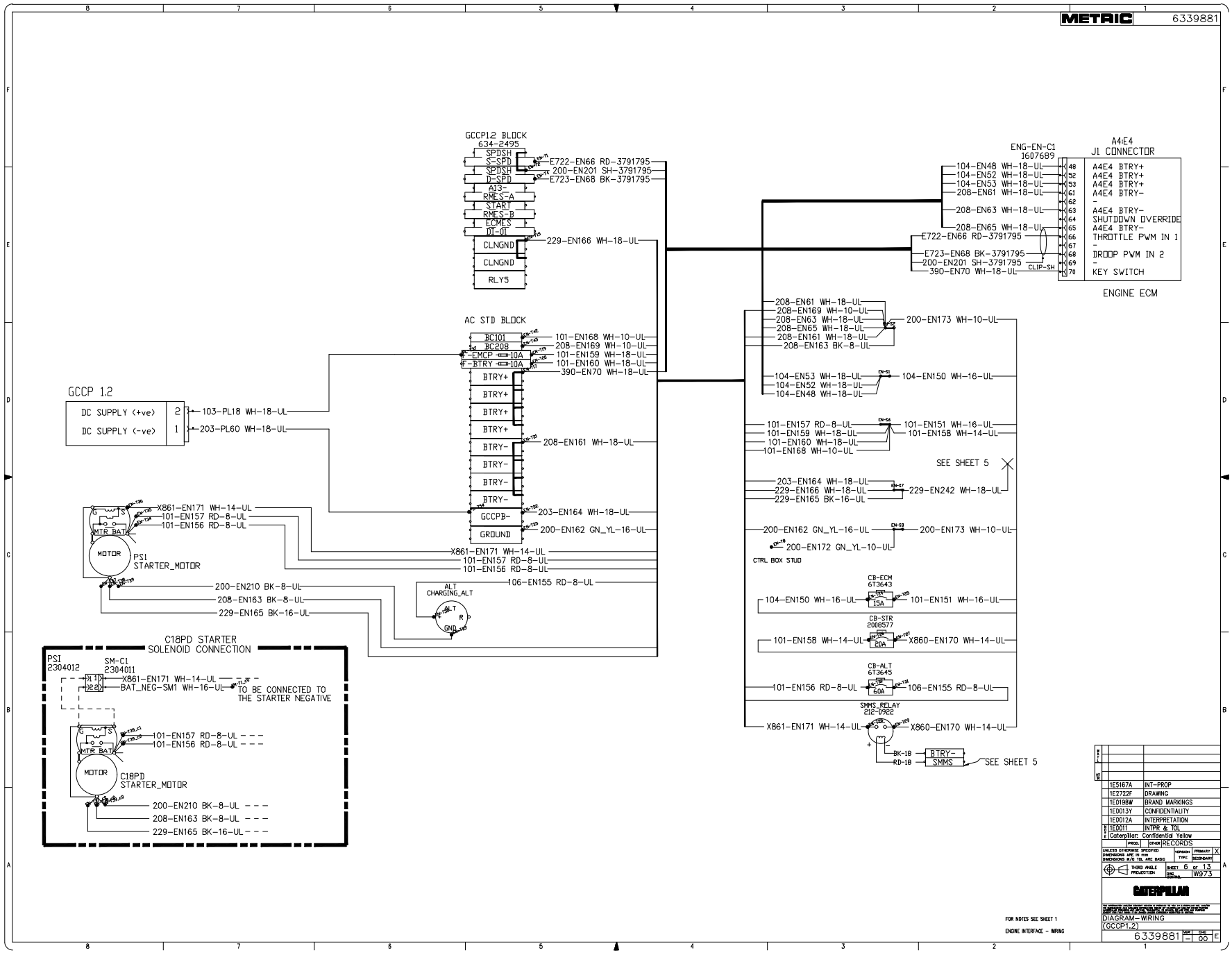
METRIC
6339881
GCCP1.2 BLOCK
634-2495
SPDSH
S-SPD
SPDSH
D-SPD
A13-
RMES-A
START
RMES-B
ECMES
DT-DT
CLNGND
CLNGND
RLY5
E722-EN66 RD-3791795
200-EN201 SH-3791795
E723-EN68 BK-3791795
229-EN166 WH-18-UL
ENG-EN-C1
1607689
A4:E4
J1 CONNECTOR
104-EN48 WH-18-UL
104-EN52 WH-18-UL
104-EN53 WH-18-UL
208-EN61 WH-18-UL
208-EN63 WH-18-UL
208-EN65 WH-18-UL
E722-EN66 RD-3791795
E723-EN68 BK-3791795
200-EN201 SH-3791795
390-EN70 WH-18-UL
CLIP-SH
48 A4E4 BTRY+
52 A4E4 BTRY+
53 A4E4 BTRY+
61 A4E4 BTRY-
62 -
63 A4E4 BTRY-
64 SHUTDOWN OVERRIDE
65 A4E4 BTRY-
66 THROTTLE PWM IN 1
67 -
68 DROOP PWM IN 2
69 -
70 KEY SWITCH
ENGINE ECM
AC STD BLOCK
BC101
BC208
EMCP 10A
BTRY 10A
BTRY+
BTRY+
BTRY+
BTRY+
BTRY-
BTRY-
BTRY-
BTRY-
GCCPB-
GROUND
101-EN168 WH-10-UL
208-EN169 WH-10-UL
101-EN159 WH-18-UL
101-EN160 WH-18-UL
390-EN70 WH-18-UL
208-EN161 WH-18-UL
203-EN164 WH-18-UL
200-EN162 GN_YL-16-UL
GCCP 1.2
DC SUPPLY (+ve) 2
DC SUPPLY (-ve) 1
103-PL18 WH-18-UL
203-PL60 WH-18-UL
X861-EN171 WH-14-UL
101-EN157 RD-8-UL
101-EN156 RD-8-UL
MTR BATT
MOTOR
PSI
STARTER_MOTOR
200-EN210 BK-8-UL
208-EN163 BK-8-UL
229-EN165 BK-16-UL
106-EN155 RD-8-UL
ALT
CHARGING_ALT
ALT
R
GND
C18PD STARTER
SOLENOID CONNECTION
PSI
2304012
SM-C1
2304011
X1
X2
X861-EN171 WH-14-UL
BAT_NEG-SM1 WH-16-UL
TO BE CONNECTED TO
THE STARTER NEGATIVE
101-EN157 RD-8-UL
101-EN156 RD-8-UL
MTR BATT
MOTOR
C18PD
STARTER_MOTOR
200-EN210 BK-8-UL
208-EN163 BK-8-UL
229-EN165 BK-16-UL
208-EN61 WH-18-UL
208-EN169 WH-10-UL
208-EN63 WH-18-UL
208-EN65 WH-18-UL
208-EN161 WH-18-UL
208-EN163 BK-8-UL
200-EN173 WH-10-UL
104-EN53 WH-18-UL
104-EN52 WH-18-UL
104-EN48 WH-18-UL
104-EN150 WH-16-UL
101-EN157 RD-8-UL
101-EN159 WH-18-UL
101-EN160 WH-18-UL
101-EN168 WH-10-UL
101-EN151 WH-16-UL
101-EN158 WH-14-UL
SEE SHEET 5
203-EN164 WH-18-UL
229-EN166 WH-18-UL
229-EN165 BK-16-UL
229-EN242 WH-18-UL
200-EN162 GN_YL-16-UL
200-EN173 WH-10-UL
200-EN172 GN_YL-10-UL
CTRL BOX STUD
CB-ECM
6T3643
15A
104-EN150 WH-16-UL
101-EN151 WH-16-UL
CB-STR
2008577
20A
101-EN158 WH-14-UL
X860-EN170 WH-14-UL
CB-ALT
6T3645
60A
101-EN156 RD-8-UL
106-EN155 RD-8-UL
SMMS_RELAY
212-0922
X861-EN171 WH-14-UL
X860-EN170 WH-14-UL
BK-18
RD-18
BTRY-
SMMS
SEE SHEET 5
FOR NOTES SEE SHEET 1
ENGINE INTERFACE - WIRING
1E5167A INT-PROP
1E2722F DRAWING
1ED198W BRAND MARKINGS
1ED013Y CONFIDENTIALITY
1ED012A INTERPRETATION
1E0011 INTPR & TOL
Caterpillar: Confidential Yellow
PROD. OTHER RECORDS
UNLESS OTHERWISE SPECIFIED
DIMENSIONS ARE IN mm
DIMENSIONS A/D TOL ARE BASIC
VERSION TYPE PRIMARY X
SECONDARY
THIRD ANGLE PROJECTION
SHEET 6 OF 13
SIZE DRAWING W973
CATERPILLAR
DIAGRAM-WIRING
(GCCP1.2)
6339881 DASH - SHEET 00 E

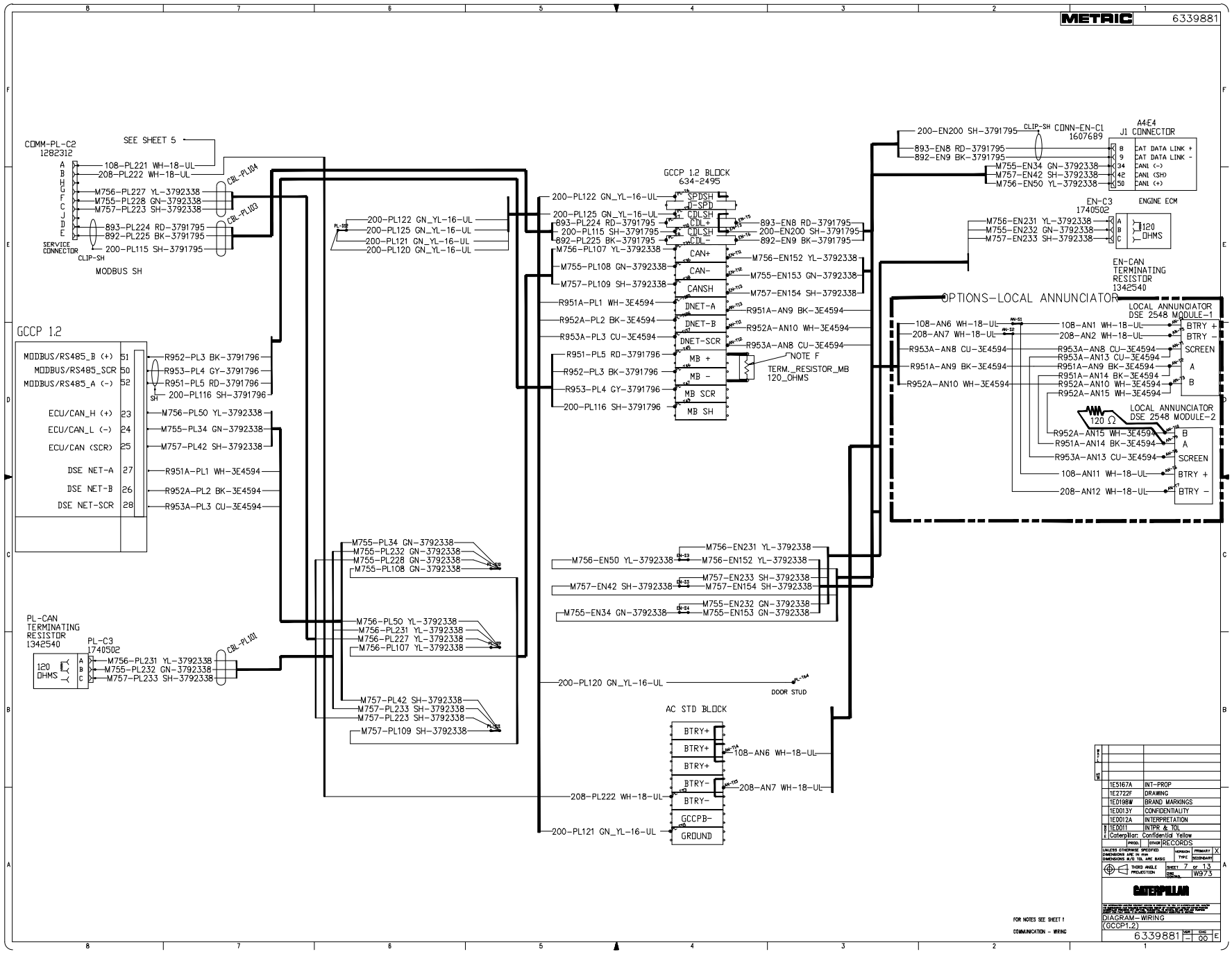
METRIC
6339881
SEE SHEET 5
COMM-PL-C2
1282312
108-PL221 WH-18-UL
208-PL222 WH-18-UL
M756-PL227 YL-3792338
M755-PL228 GN-3792338
M757-PL223 SH-3792338
893-PL224 RD-3791795
892-PL225 BK-3791795
200-PL115 SH-3791795
CBL-PL104
CBL-PL103
SERVICE CONNECTOR
CLIP-SH
MODBUS SH
GCCP 1.2
MODBUS/RS485_B (+) 51
MODBUS/RS485_SCR 50
MODBUS/RS485_A (-) 52
ECU/CAN_H (+) 23
ECU/CAN_L (-) 24
ECU/CAN (SCR) 25
DSE NET-A 27
DSE NET-B 26
DSE NET-SCR 28
R952-PL3 BK-3791796
R953-PL4 GY-3791796
R951-PL5 RD-3791796
200-PL116 SH-3791796
M756-PL50 YL-3792338
M755-PL34 GN-3792338
M757-PL42 SH-3792338
R951A-PL1 WH-3E4594
R952A-PL2 BK-3E4594
R953A-PL3 CU-3E4594
PL-CAN TERMINATING RESISTOR
1342540
PL-C3
1740502
120 OHMS
M756-PL231 YL-3792338
M755-PL232 GN-3792338
M757-PL233 SH-3792338
CBL-PL101
200-PL122 GN_YL-16-UL
200-PL125 GN_YL-16-UL
200-PL115 SH-3791795
200-PL121 GN_YL-16-UL
200-PL120 GN_YL-16-UL
M755-PL34 GN-3792338
M755-PL232 GN-3792338
M755-PL228 GN-3792338
M755-PL108 GN-3792338
M756-PL50 YL-3792338
M756-PL231 YL-3792338
M756-PL227 YL-3792338
M756-PL107 YL-3792338
M757-PL42 SH-3792338
M757-PL233 SH-3792338
M757-PL223 SH-3792338
M757-PL109 SH-3792338
GCCP 1.2 BLOCK
634-2495
SPDSH
J-SPD
CDLSH
CDL+
CDL-
CAN+
CAN-
CANSH
DNET-A
DNET-B
DNET-SCR
MB +
MB -
MB SCR
MB SH
893-EN8 RD-3791795
200-EN200 SH-3791795
892-EN9 BK-3791795
M756-EN152 YL-3792338
M755-EN153 GN-3792338
M757-EN154 SH-3792338
R951A-AN9 BK-3E4594
R952A-AN10 WH-3E4594
R953A-AN8 CU-3E4594
NOTE F
TERM._RESISTOR_MB
120_OHMS
M756-EN231 YL-3792338
M756-EN50 YL-3792338
M756-EN152 YL-3792338
M757-EN233 SH-3792338
M757-EN42 SH-3792338
M757-EN154 SH-3792338
M755-EN232 GN-3792338
M755-EN34 GN-3792338
M755-EN153 GN-3792338
200-PL120 GN_YL-16-UL
DOOR STUD
AC STD BLOCK
BTRY+
BTRY+
BTRY+
BTRY-
BTRY-
GCCPB-
GROUND
108-AN6 WH-18-UL
208-AN7 WH-18-UL
208-PL222 WH-18-UL
200-PL121 GN_YL-16-UL
200-EN200 SH-3791795
CLIP-SH
CONN-EN-C1
1607689
893-EN8 RD-3791795
892-EN9 BK-3791795
M755-EN34 GN-3792338
M757-EN42 SH-3792338
M756-EN50 YL-3792338
A4E4
J1 CONNECTOR
B CAT DATA LINK +
9 CAT DATA LINK -
34 CAN1 (-)
42 CAN1 (SH)
50 CAN1 (+)
EN-C3
1740502
ENGINE ECM
M756-EN231 YL-3792338
M755-EN232 GN-3792338
M757-EN233 SH-3792338
120 OHMS
EN-CAN TERMINATING RESISTOR
1342540
OPTIONS-LOCAL ANNUNCIATOR
LOCAL ANNUNCIATOR DSE 2548 MODULE-1
108-AN6 WH-18-UL
208-AN7 WH-18-UL
R953A-AN8 CU-3E4594
R951A-AN9 BK-3E4594
R952A-AN10 WH-3E4594
108-AN1 WH-18-UL
208-AN2 WH-18-UL
R953A-AN8 CU-3E4594
R953A-AN13 CU-3E4594
R951A-AN9 BK-3E4594
R952A-AN10 WH-3E4594
R952A-AN15 WH-3E4594
BTRY +
BTRY -
SCREEN
A
B
120 Ω
LOCAL ANNUNCIATOR DSE 2548 MODULE-2
R952A-AN15 WH-3E4594
R951A-AN14 BK-3E4594
R953A-AN13 CU-3E4594
108-AN11 WH-18-UL
208-AN12 WH-18-UL
B
A
SCREEN
BTRY +
BTRY -
FOR NOTES SEE SHEET 1
COMMUNICATION - WIRING
1E5167A INT-PROP
1E2722F DRAWING
1E0198W BRAND MARKINGS
1E0013Y CONFIDENTIALITY
1E0012A INTERPRETATION
1E0011 INTPR & TOL
Caterpillar: Confidential Yellow
RECORDS
PRIMARY
SECONDARY
SHEET 7 OF 13
W973
CATERPILLAR
DIAGRAM-WIRING
(GCCP1.2)
6339881
00

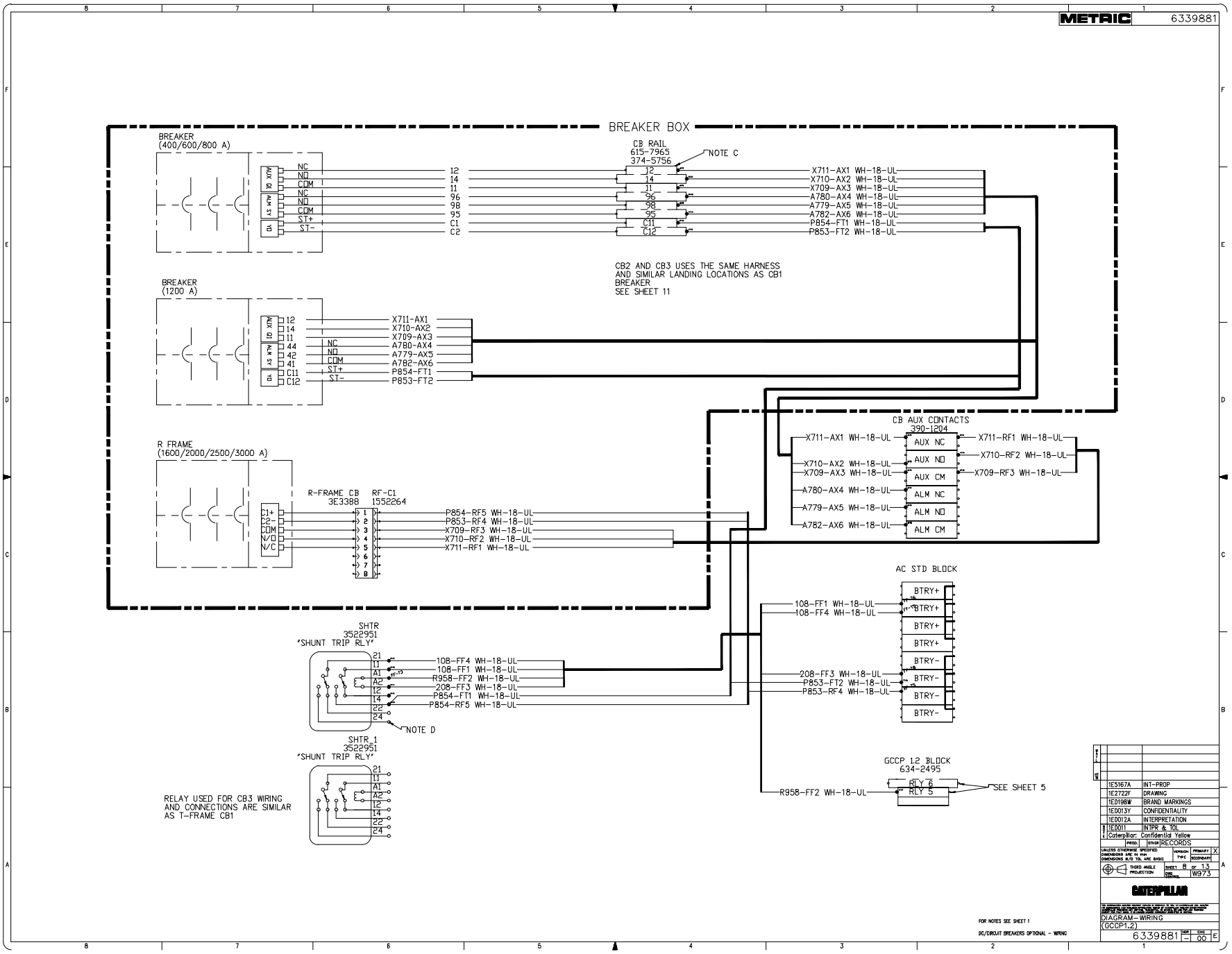
METRIC
6339881
BREAKER BOX
BREAKER
(400/600/800 A)
NC
NO
COM
NC
NO
COM
ST+
ST-
12
14
11
96
98
95
C1
C2
CB RAIL
615-7965
374-5756
NOTE C
X711-AX1 WH-18-UL
X710-AX2 WH-18-UL
X709-AX3 WH-18-UL
A780-AX4 WH-18-UL
A779-AX5 WH-18-UL
A782-AX6 WH-18-UL
P854-FT1 WH-18-UL
P853-FT2 WH-18-UL
CB2 AND CB3 USES THE SAME HARNESS
AND SIMILAR LANDING LOCATIONS AS CB1
BREAKER
SEE SHEET 11
BREAKER
(1200 A)
X711-AX1
X710-AX2
X709-AX3
A780-AX4
A779-AX5
A782-AX6
P854-FT1
P853-FT2
R FRAME
(1600/2000/2500/3000 A)
R-FRAME CB
3E3388
RF-C1
1552264
P854-RF5 WH-18-UL
P853-RF4 WH-18-UL
X709-RF3 WH-18-UL
X710-RF2 WH-18-UL
X711-RF1 WH-18-UL
CB AUX CONTACTS
390-1204
AUX NC
AUX NO
AUX CM
ALM NC
ALM NO
ALM CM
X711-RF1 WH-18-UL
X710-RF2 WH-18-UL
X709-RF3 WH-18-UL
AC STD BLOCK
BTRY+
BTRY-
108-FF1 WH-18-UL
108-FF4 WH-18-UL
208-FF3 WH-18-UL
P853-FT2 WH-18-UL
P853-RF4 WH-18-UL
SHTR
3522951
"SHUNT TRIP RLY"
108-FF4 WH-18-UL
108-FF1 WH-18-UL
R958-FF2 WH-18-UL
208-FF3 WH-18-UL
P854-FT1 WH-18-UL
P854-RF5 WH-18-UL
NOTE D
SHTR_1
3522951
"SHUNT TRIP RLY"
RELAY USED FOR CB3 WIRING
AND CONNECTIONS ARE SIMILAR
AS T-FRAME CB1
GCCP 1.2 BLOCK
634-2495
RLY 6
RLY 5
R958-FF2 WH-18-UL
SEE SHEET 5
FOR NOTES SEE SHEET 1
DC/CIRCUIT BREAKERS OPTIONAL - WIRING
1E5167A INT-PROP
1E2722F DRAWING
1E0198W BRAND MARKINGS
1E0013Y CONFIDENTIALITY
1E0012A INTERPRETATION
1E0011 INTPR & TOL
Caterpillar: Confidential Yellow
PROD.
OTHER
RECORDS
UNLESS OTHERWISE SPECIFIED
DIMENSIONS ARE IN mm
DIMENSIONS A/S TOL ARC BASIC
VERSION
TYPE
PRIMARY
SECONDARY
THIRD ANGLE PROJECTION
SHEET 8 OF 13
SIZE
W973
CATERPILLAR
DIAGRAM-WIRING
(GCCP1.2)
6339881
DWG
00
E

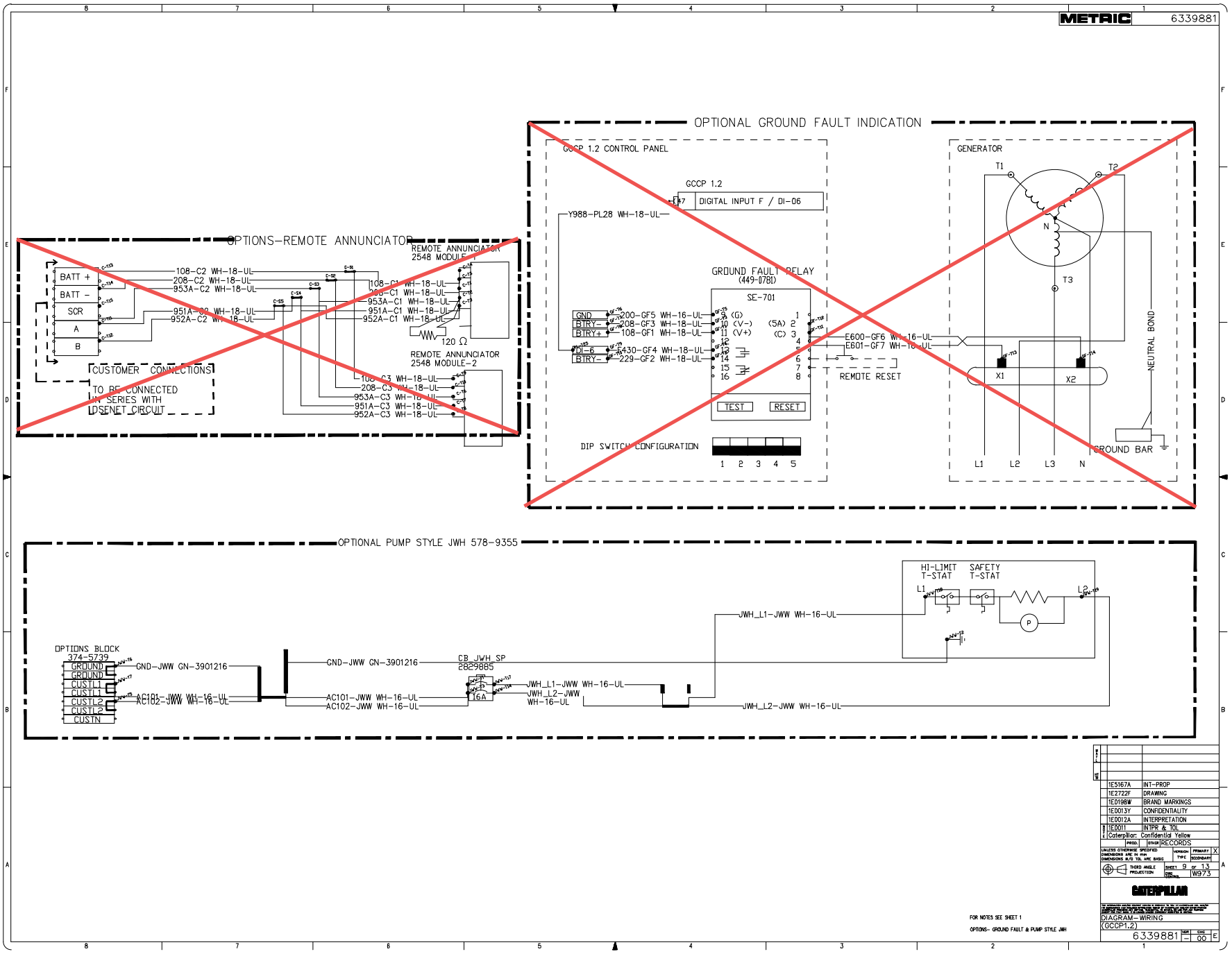
METRIC
6339881
OPTIONS–REMOTE ANNUNCIATOR
BATT +
BATT –
SCR
A
B
CUSTOMER CONNECTIONS
TO BE CONNECTED IN SERIES WITH LDSENET CIRCUIT
108–C2 WH–18–UL
208–C2 WH–18–UL
953A–C2 WH–18–UL
951A–C2 WH–18–UL
952A–C2 WH–18–UL
108–C1 WH–18–UL
208–C1 WH–18–UL
953A–C1 WH–18–UL
951A–C1 WH–18–UL
952A–C1 WH–18–UL
REMOTE ANNUNCIATOR 2548 MODULE
120 Ω
REMOTE ANNUNCIATOR 2548 MODULE–2
108–C3 WH–18–UL
208–C3 WH–18–UL
953A–C3 WH–18–UL
951A–C3 WH–18–UL
952A–C3 WH–18–UL
OPTIONAL GROUND FAULT INDICATION
GCCP 1.2 CONTROL PANEL
GCCP 1.2
DIGITAL INPUT F / DI–06
Y988–PL28 WH–18–UL
GROUND FAULT RELAY (449–0781)
SE–701
GND
BTRY–
BTRY+
DI–6
200–GF5 WH–16–UL
208–GF3 WH–18–UL
108–GF1 WH–18–UL
430–GF4 WH–18–UL
229–GF2 WH–18–UL
(G)
(V–)
(V+)
(5A)
(C)
E600–GF6 WH–16–UL
E601–GF7 WH–16–UL
REMOTE RESET
TEST
RESET
DIP SWITCH CONFIGURATION
1 2 3 4 5
GENERATOR
T1
T2
T3
N
X1
X2
NEUTRAL BOND
GROUND BAR
L1
L2
L3
N
OPTIONAL PUMP STYLE JWH 578–9355
OPTIONS BLOCK 374–5739
GROUND
GROUND
CUSTL1
CUSTL1
CUSTL2
CUSTL2
CUSTN
GND–JWW GN–3901216
AC101–JWW WH–16–UL
AC102–JWW WH–16–UL
CB_JWH_SP 2829885
16A
JWH_L1–JWW WH–16–UL
JWH_L2–JWW WH–16–UL
HI–LIMIT T–STAT
SAFETY T–STAT
P
FOR NOTES SEE SHEET 1
OPTIONS– GROUND FAULT & PUMP STYLE JWH
1E5167A INT–PROP
1E2722F DRAWING
1ED198W BRAND MARKINGS
1ED013Y CONFIDENTIALITY
1ED012A INTERPRETATION
1E0011 INTPR & TOL
Caterpillar: Confidential Yellow
RECORDS
THIRD ANGLE PROJECTION
SHEET 9 OF 13
W973
CATERPILLAR
DIAGRAM–WIRING (GCCP1.2)
6339881
00

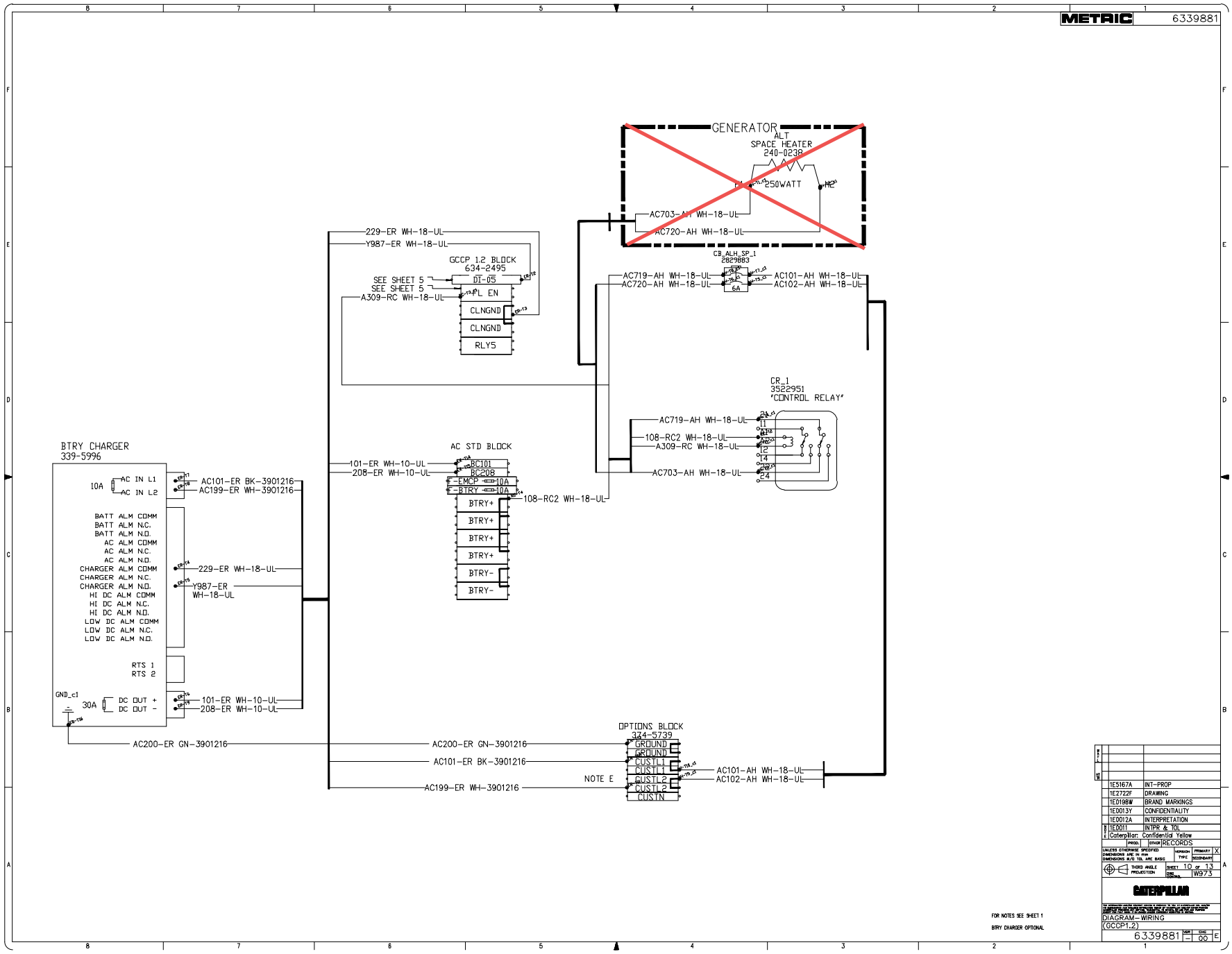
METRIC
6339881
GENERATOR
ALT
SPACE HEATER
240-0238
250WATT
AC703-AH WH-18-UL
AC720-AH WH-18-UL
229-ER WH-18-UL
Y987-ER WH-18-UL
GCCP 1.2 BLOCK
634-2495
SEE SHEET 5
SEE SHEET 5
A309-RC WH-18-UL
DT-05
FL EN
CLNGND
CLNGND
RLY5
CB_ALH_SP_1
2829883
AC719-AH WH-18-UL
AC720-AH WH-18-UL
6A
AC101-AH WH-18-UL
AC102-AH WH-18-UL
CR_1
3522951
"CONTROL RELAY"
AC719-AH WH-18-UL
108-RC2 WH-18-UL
A309-RC WH-18-UL
AC703-AH WH-18-UL
BTRY CHARGER
339-5996
10A
AC IN L1
AC IN L2
BATT ALM COMM
BATT ALM N.C.
BATT ALM N.O.
AC ALM COMM
AC ALM N.C.
AC ALM N.O.
CHARGER ALM COMM
CHARGER ALM N.C.
CHARGER ALM N.O.
HI DC ALM COMM
HI DC ALM N.C.
HI DC ALM N.O.
LOW DC ALM COMM
LOW DC ALM N.C.
LOW DC ALM N.O.
RTS 1
RTS 2
GND_c1
30A
DC OUT +
DC OUT -
AC101-ER BK-3901216
AC199-ER WH-3901216
229-ER WH-18-UL
Y987-ER WH-18-UL
101-ER WH-10-UL
208-ER WH-10-UL
AC200-ER GN-3901216
AC STD BLOCK
101-ER WH-10-UL
208-ER WH-10-UL
BC101
BC208
EMCP 10A
BTRY 10A
108-RC2 WH-18-UL
BTRY+
BTRY+
BTRY+
BTRY+
BTRY-
BTRY-
OPTIONS BLOCK
374-5739
GROUND
GROUND
CUSTL1
CUSTL1
CUSTL2
CUSTL2
CUSTN
NOTE E
AC200-ER GN-3901216
AC101-ER BK-3901216
AC199-ER WH-3901216
AC101-AH WH-18-UL
AC102-AH WH-18-UL
FOR NOTES SEE SHEET 1
BTRY CHARGER OPTIONAL
1E5167A INT-PROP
1E2722F DRAWING
1E0198W BRAND MARKINGS
1E0013Y CONFIDENTIALITY
1E0012A INTERPRETATION
1E0011 INTPR & TOL
Caterpillar: Confidential Yellow
PROD. OTHER RECORDS
UNLESS OTHERWISE SPECIFIED
DIMENSIONS ARE IN mm
DIMENSIONS A/S TOL ARE BASIC
VERSION TYPE PRIMARY X SECONDARY
THIRD ANGLE PROJECTION
SHEET 10 OF 13
ENG CONTROL W973
CATERPILLAR
DIAGRAM-WIRING
(GCCP1.2)
6339881 DASH – SHEET 00 E

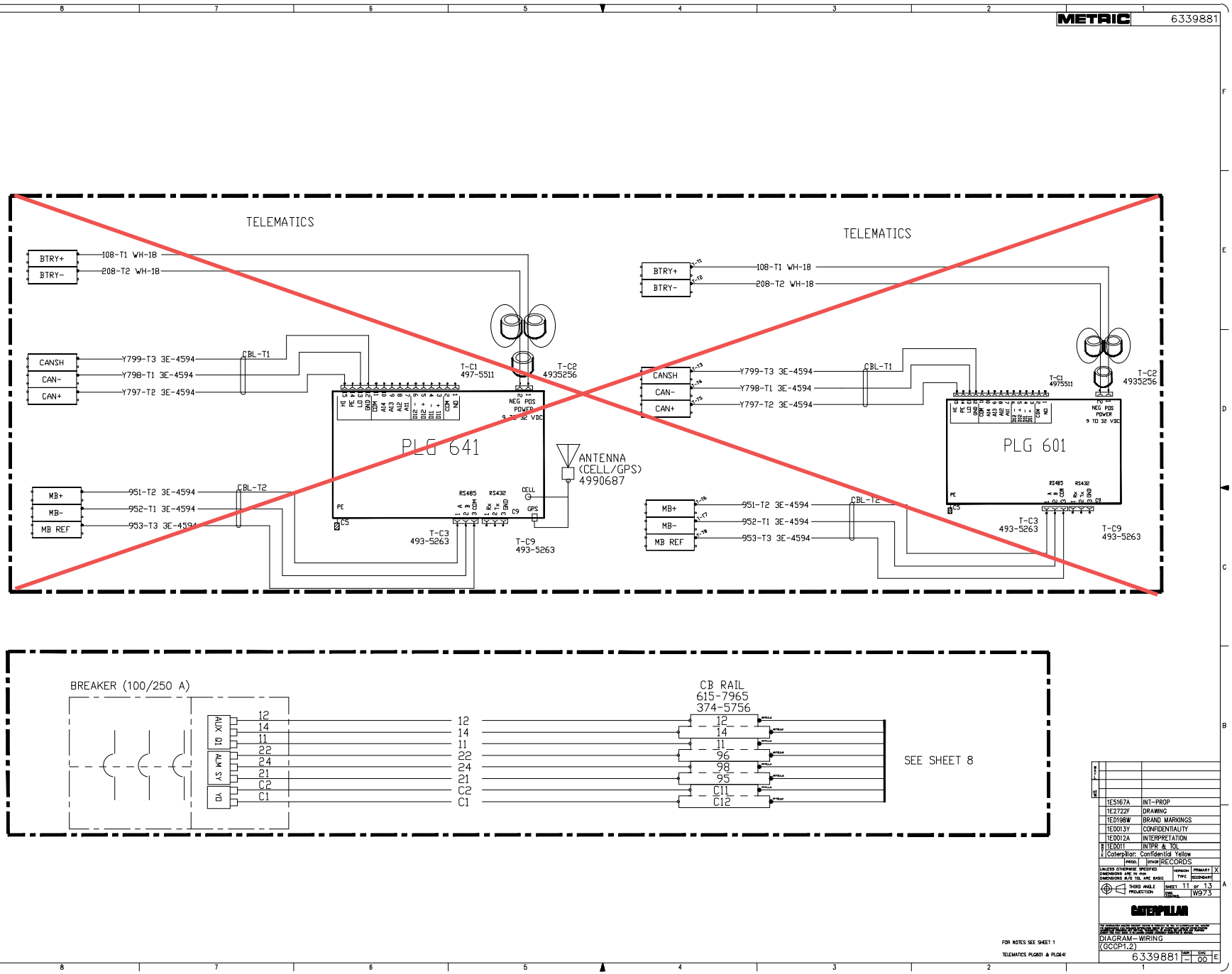
METRIC
6339881
TELEMATICS
BTRY+
BTRY-
108-T1 WH-18
208-T2 WH-18
CANSH
CAN-
CAN+
Y799-T3 3E-4594
Y798-T1 3E-4594
Y797-T2 3E-4594
CBL-T1
T-C1
497-5511
T-C2
4935256
PLG 641
ANTENNA
(CELL/GPS)
4990687
MB+
MB-
MB REF
951-T2 3E-4594
952-T1 3E-4594
953-T3 3E-4594
CBL-T2
T-C3
493-5263
T-C9
493-5263
PLG 601
BREAKER (100/250 A)
AUX Q1
ALM SY
YD
12
14
11
22
24
21
C2
C1
CB RAIL
615-7965
374-5756
96
98
95
C11
C12
SEE SHEET 8
1E5167A INT-PROP
1E2722F DRAWING
1E0198W BRAND MARKINGS
1E0013Y CONFIDENTIALITY
1E0012A INTERPRETATION
1E0011 INTPR & TOL
Caterpillar: Confidential Yellow
RECORDS
THIRD ANGLE PROJECTION
SHEET 11 OF 13
W973
CATERPILLAR
DIAGRAM-WIRING
(GCCP1.2)
6339881
00
FOR NOTES SEE SHEET 1
TELEMATICS PLG601 & PLG641

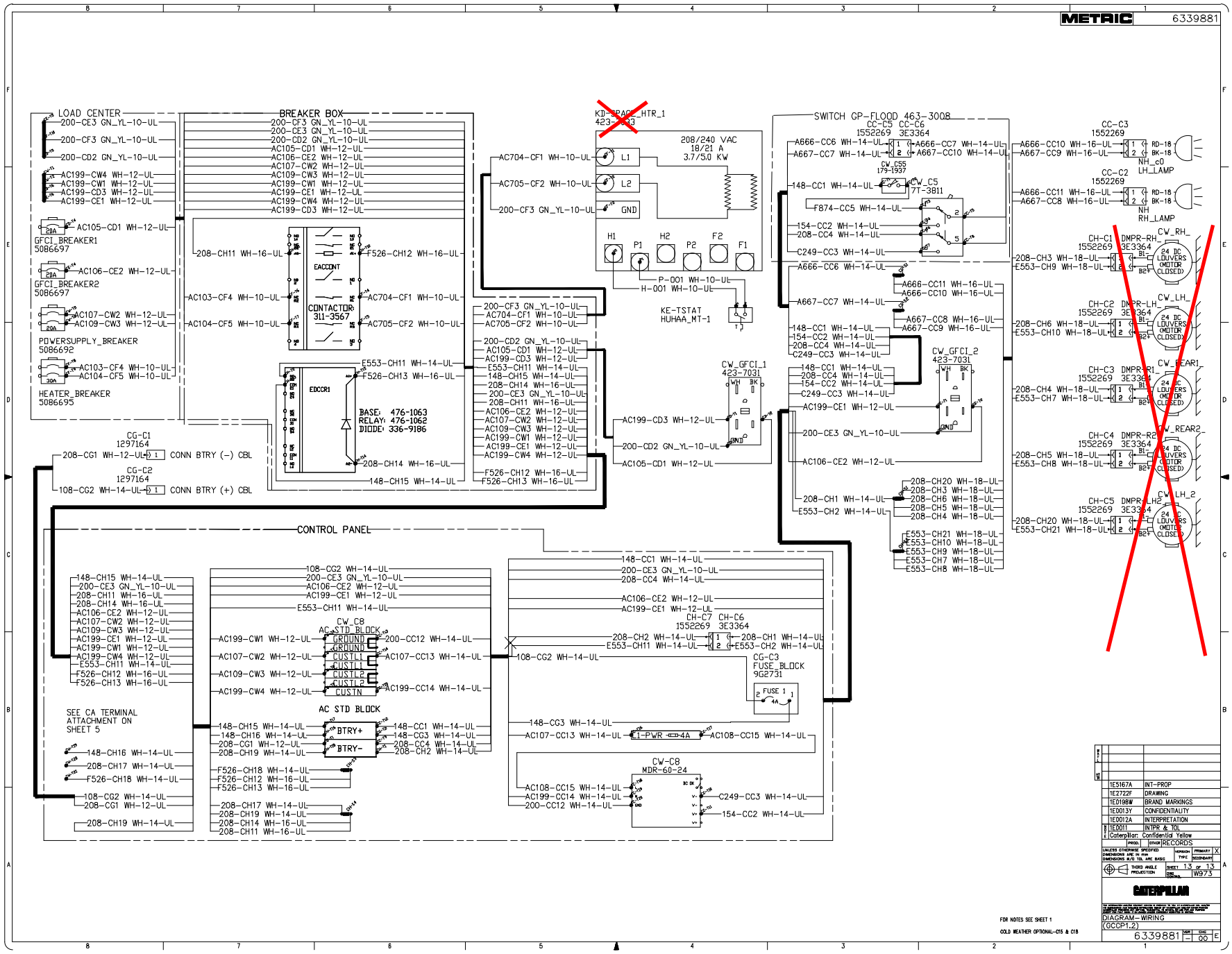
METRIC
6339881
LOAD CENTER
BREAKER BOX
GFCI_BREAKER1
5086697
GFCI_BREAKER2
5086697
POWERSUPPLY_BREAKER
5086692
HEATER_BREAKER
5086695
CONTACTOR
311-3567
EDCCR1
BASE: 476-1063
RELAY: 476-1062
DIODE: 336-9186
208/240 VAC
18/21 A
3.7/5.0 KW
KE-TSTAT
HUHAA_MT-1
SWITCH GP-FLOOD 463-3008
CW_GFCI_1
423-7031
CW_GFCI_2
423-7031
CG-C1
1297164
CONN BTRY (-) CBL
CG-C2
1297164
CONN BTRY (+) CBL
CONTROL PANEL
CW_C8
AC STD BLOCK
AC STD BLOCK
BTRY+
BTRY-
CG-C3
FUSE_BLOCK
9G2731
CW-C8
MDR-60-24
CC-C3
1552269
CC-C2
1552269
CW_RH_
CW_LH_
CW_REAR1
CW_REAR2
CW_LH_2
24 DC LOUVERS (MOTOR CLOSED)
SEE CA TERMINAL ATTACHMENT ON SHEET 5
FOR NOTES SEE SHEET 1
COLD WEATHER OPTIONAL-C15 & C18
1E5167A INT-PROP
1E2722F DRAWING
1ED198W BRAND MARKINGS
1ED013Y CONFIDENTIALITY
1ED012A INTERPRETATION
1E6011 INTPR & TOL
Caterpillar: Confidential Yellow
RECORDS
DIAGRAM-WIRING
(GCCP1,2)
6339881
CATERPILLAR

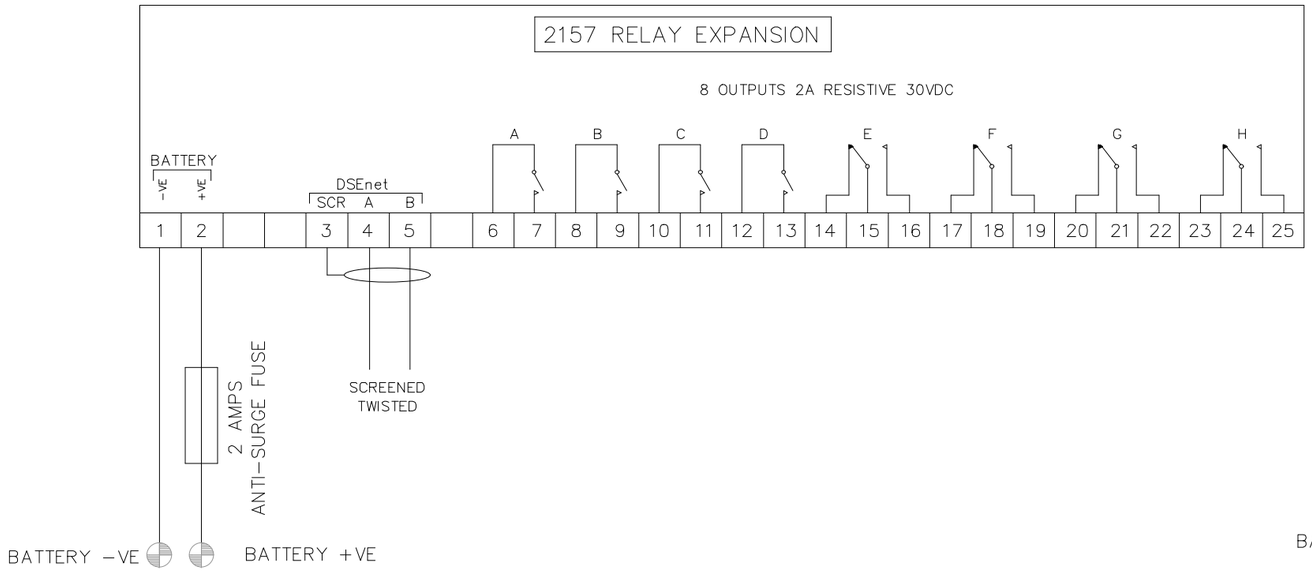

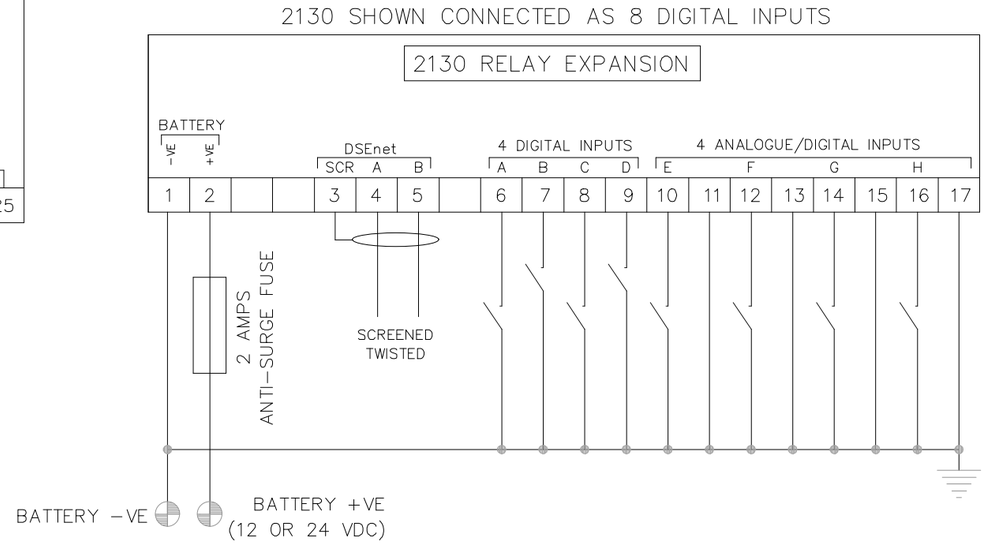

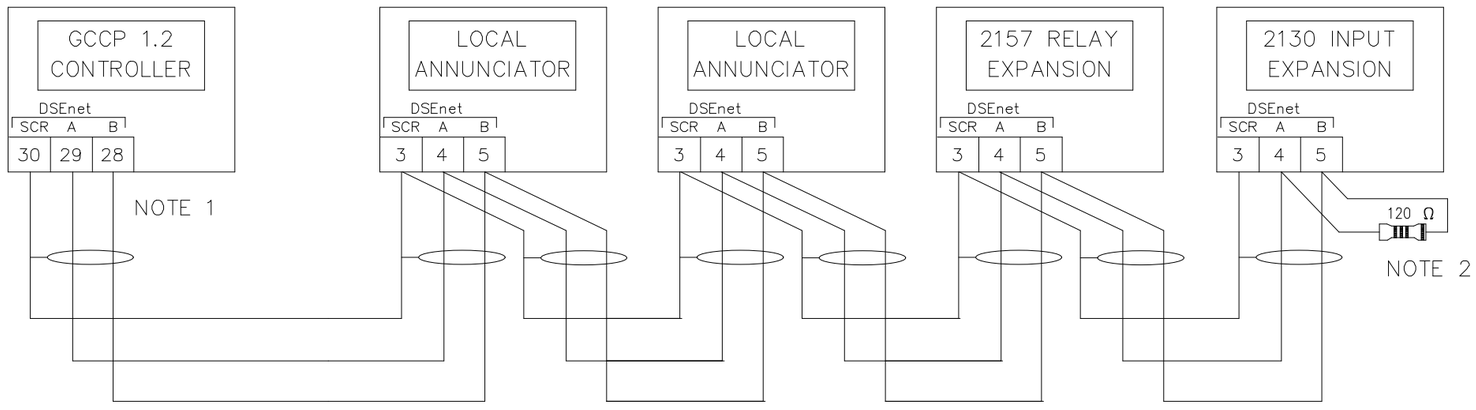

NOTE 1
AS A TERMINATING RESISTOR IS INTERNALLY FITTED TO THE HOST CONTROLLER, THE HOST CONTROLLER MUST BE THE FIRST UNIT ON THE DSEnet

NOTE 2
A 120 OHM TERMINATION RESISTOR MUST BE FITTED TO THE LAST UNIT ON THE DSEnet

DRAWN D. URIARTE	DATE 1/8/25	QUINN POWER SYSTEMS CAT	656 E. LA CADENA DR RIVERSIDE, CA 92507
CHECKED T. PINT	DATE 1/8/25		
APPROVED	DATE		
TITLE: OPTIONAL MODULES INPUT & OUTPUT MODULES		SCALE: NONE	JOB: CITY OF REDLANDS–TEXAS BS COUNTRY CLUB, FIFTH, & AGATE PS
			DWG NO. E230557–2

GCCP 1.2 & 1.5

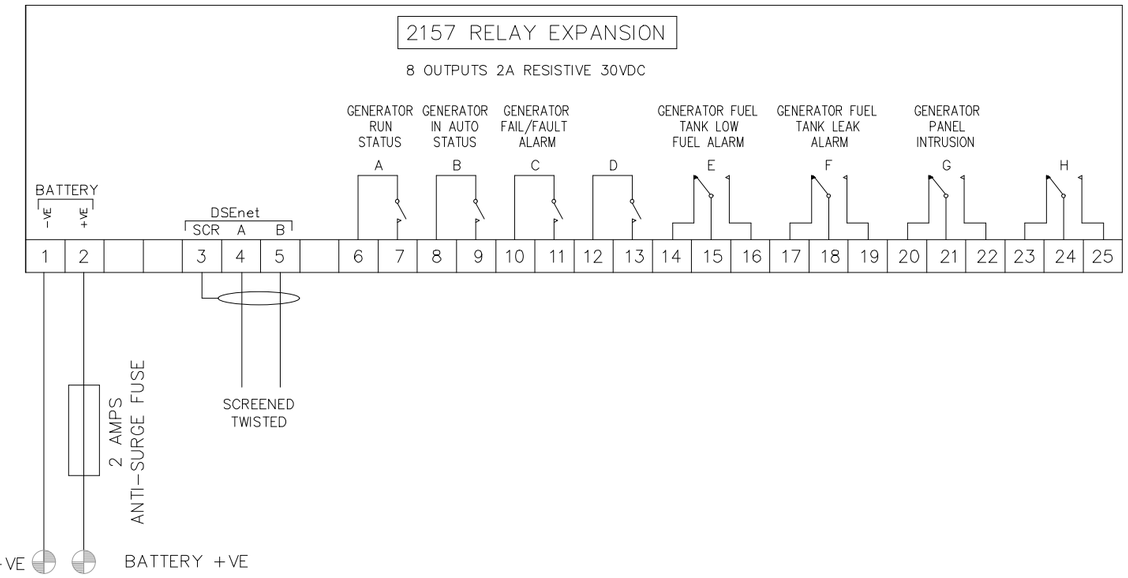

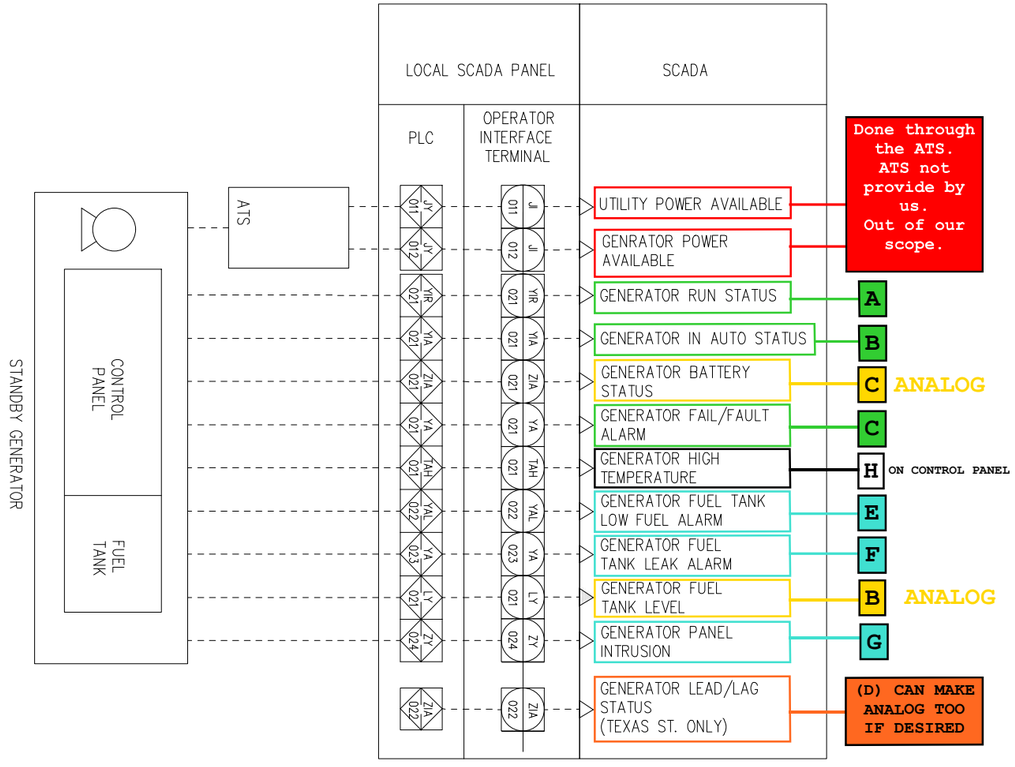

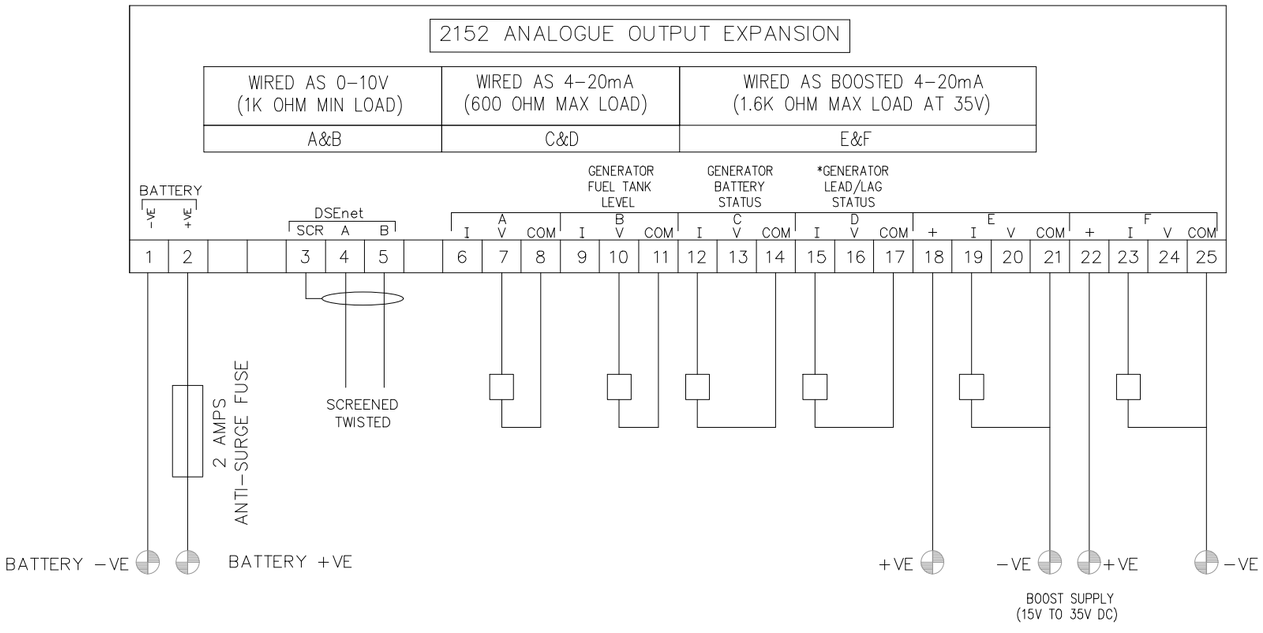

DRAWN D. URIARTE	DATE 5/9/2025	QUINN POWER SYSTEMS CAT	656 E. LA CADENA DR RIVERSIDE, CA 92507
CHECKED	DATE		
APPROVED	DATE		
TITLE: OPTIONAL MODULES INPUT & OUTPUT MODULES CONNECTION ILLUSTRATION	SCALE: NONE	JOB: CITY OF REDLANDS-TEXAS BS COUNTRY CLUB, FIFTH, & AGATE PS	
		DWG NO. N/A	

4.2 SCHEMATIC INTERCONNECTION DIAGRAM

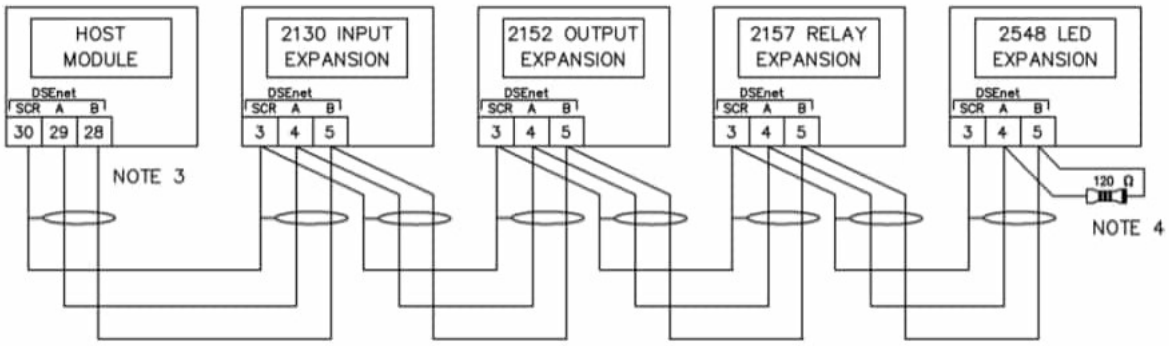

NOTE 3
AS A TERMINATING RESISTOR IS INTERNALLY FITTED TO THE HOST CONTROLLER, THE HOST CONTROLLER MUST BE THE FIRST UNIT ON THE DSEnet

NOTE 4
A 120 OHM TERMINATION RESISTOR MUST BE FITTED TO THE LAST UNIT ON THE DSEnet

4.3 TYPICAL WIRING DIAGRAM FOR ANALOG OUTPUT MODULE

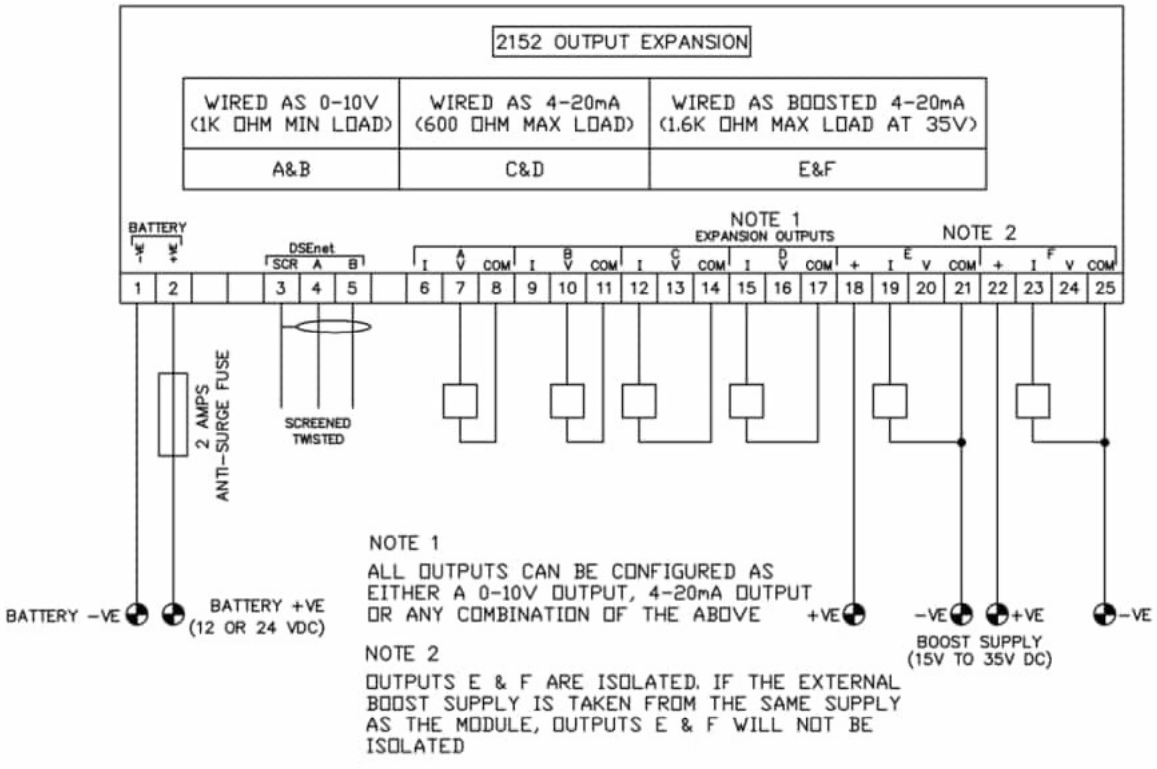

NOTE 1
ALL OUTPUTS CAN BE CONFIGURED AS EITHER A 0-10V OUTPUT, 4-20mA OUTPUT OR ANY COMBINATION OF THE ABOVE

NOTE 2
OUTPUTS E & F ARE ISOLATED. IF THE EXTERNAL BOOST SUPPLY IS TAKEN FROM THE SAME SUPPLY AS THE MODULE, OUTPUTS E & F WILL NOT BE ISOLATED

NOTE : Configuration of the inputs is performed in the host controller.

Extra Instructions discussed and shared for the Modules Wiring:

1. *Generator Engine Temperature High Alarm (TAH) should be a Discrete Output (DO) relay at the Generator Panel to be read as a Discrete Input (DI) signal at the PLC.*
   Setting it up as a DO for the input as a DI to their PLC is not a problem. (The output H shown in the image below is an output straight from the GCCP control panel.)



2. *Generator Battery Status should be an Analog Output (AO) to provide the Battery Voltage to be read as an Analog Input (AI) signal at the PLC.*
   We can do a AO out for battery voltage creating a custom curve with a range of their preference. (I will add it to the Analog Output wiring diagram as an AO out.)



3. *The Texas St. Lead/Lag status should be a DO relay at the Generator Panel to be read as a DI signal at the PLC.*
   The Lead/Lag status looks to be an issue as there is not a configurable DO for that. We can create an Analog output for it if desired. (Unfortunately, we are only able to do an Analog output for Lead/Lag status)

4. *Confirm that the expansion modules will be factory installed by CAT.*
   Installed by a Cat Dealer as Cat does not provide the Analog modules. (We will be sure to have all the modules installed and programmed/wired before delivering to the job site)

5. *Provide wiring diagram for the AO Expansion Module for the Analog Signals (similar to what was provided for the DO module).*
   See attached for expansion Module drawing with both the DO module and Analog expansion module on it. I also added a page from the analog operators manual for more details if needed. If you are good with this, I will add it to the Submittal as well.

David,
I thought that they were talking about Power Factor Lead/Lag. Now I see that they want to know which generator set is lead, first to start at next call to run and which one will wait to start as the lag unit. I've checked outputs on the 1.5 and do not see an output to communicate which unit will start next as the control panel will automatically balance hours between the two units to keep them with fairly equal operating hours. With the Load Demand Scheme we can "start all sets initially" or "start sets as load requires". The panels will keep the units hours in balance as they communicate over the MSC link. I recommend starting all units initially and then letting them shed a unit off depending on load.

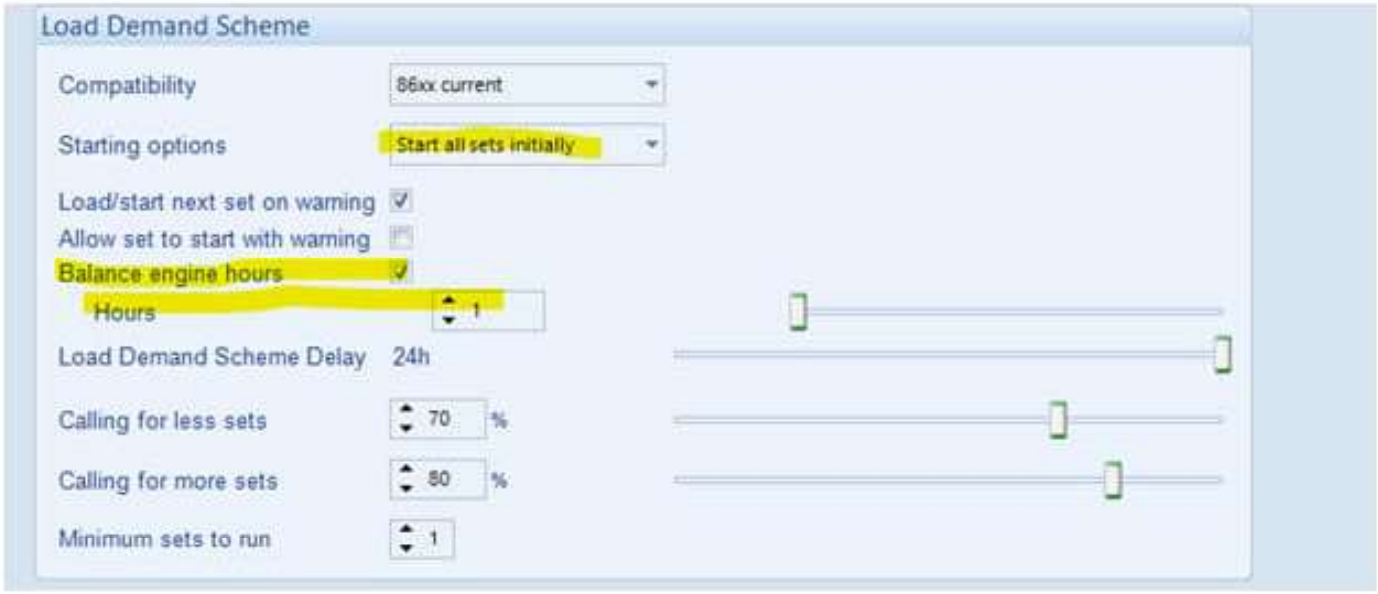

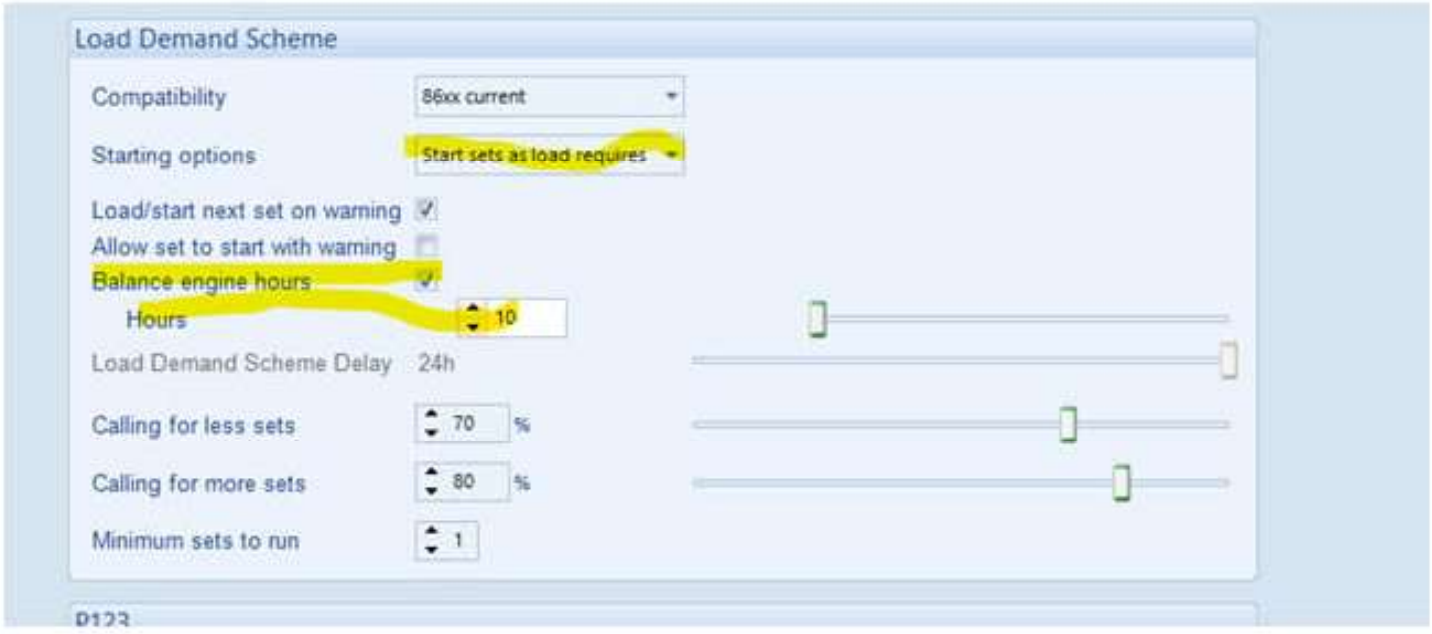

THIS PAGE INTENTIONALLY LEFT BLANK

BRADY
Water • Power • Transportation

SUBMITTAL REVIEW

Date: June 12, 2025

To: City of Redlands **Attention:** Paul Mariscal	**Project Owner:** City of Redlands **Project Name:** City of Redlands Water Facilities Generators
Date Received: June 12, 2025 **Reviewed By:** Ryan Nishimura	**Job No.:** PROJECT 501028 (BRADY)
Item of Equipment or Material: OFE Texas St Generator	**Specification Section / Drawing:** Specification 16622 / Sheet TS-E-2

Submittal No.	Subject of Shop Drawing or Data	No Exceptions Taken	Make Corrections Noted	Submit Specified Items	Revise & Resubmit	Rejected	For Record Only
OFE Submittal-3	OFE Texas St Generator	X					

Comments:

Submittal review is for Owner Furnished Equipment (OFE). Comments are for information only.

1. No exceptions.

Regards,

Ryan Nishimura, PE

Richard Brady & Associates

BRADY
Water • Power • Transportation

Corrections or comments made relative to submittals during this review do not relieve the contractor from compliance with the requirements of the drawings and specifications. This check is only for review of general conformance with the design concept of the project and general compliance with the information given in the contract documents. The contractor is responsible for confirming and correlating all quantities and dimensions; selecting fabrication processes and techniques of construction; coordinating its work with that of other trades, and performing its work in a safe and satisfactory manner.

656 East La Cadena Drive
Riverside CA 92507
Phone: (951) 683-5960 Fax: (951) 788-5112

GENERATOR SET SUBMITTAL FOR APPROVAL

Texas BS

City Of Redlands
955 Parkford Dr,
Redlands, CA 92374

Project Number: 240171
Stock ID(s): RE16824 & RE16825

(2) CATERPILLAR MODEL C15 DIESEL GENERATOR SETS, STANDBY RATED, 400kW, 277/480V, 3 PHASE, 60HZ AT 1800 RPM, WITH 330 GALLON INTEGRAL TANK AND SOUND ATTENUATED ENCLOSURE

Project Engineer: David Uriarte
Email: david.uriarte@quinnpower.com
Phone: (951) 774-3244

Bill of Materials

Configuration:

(2) CATERPILLAR MODEL C15 DIESEL GENERATOR SETS, STANDBY RATED, 400kW, 277/480V, 3 PHASE, 60HZ AT 1800 RPM, WITH 330 GALLON INTEGRAL TANK AND SOUND ATTENUATED ENCLOSURE

CAT Standard Features and options

Engine Package Description:

Diesel Engine 15L, EPA TIER 3
Model C15, 6 Cylinder, 4-Cycle, TIER 3
CAT Electronic Governor (ADEM A4)

Starting / Charging System:

24VDC System
Standard Wet Batteries with rack and cables

Control System:

GCCP 1.5 Auto Start Control Panel
Features Include:
- 4-line back-lit LCD text display
- LED and LCD alarm indication
- Comprehensive synchronising & load-sharing capabilities
- Built-in AVR control
- Base load (kW export) functionality
- Positive & negative kVAr export control
- Mains (utility) de-coupling protection
- Generator power (kW, kV Ar, kV A & pf) monitoring
- Overload (kW & kV Ar) protection
- Reverse power (kW & kV Ar) protection
- Unbalanced load protection
- Independent earth fault protection
- Advanced integral PLC editor
- 11 Configurable inputs, 8 Configurable outputs
- Configurable flexible sensor inputs
- User configurable RS232, RS485 and Ethernet communications
- MODBUS RTU & TCP support
- User configurable MODBUS pages
- Advanced SMS control and fault messaging (additional GSM modem required)
- Easy access diagnostic pages including modem diagnostic pages
- Data logging and trending
- CAN, MPU and Frequency speed sensing
- Front panel editing with PIN protection
- Configuration Suite PC software via USB
- LED and LCD alarm indication
- Configurable display languages
- USB connectivity
- Customisable status screens
- Five key menu navigation
- 3 Configurable maintenance alarms
- Multiple date and time run scheduler
- Manual fuel pump control
- Charge alternator failure protection
- Load switching (load shedding and dummy load control
- Configurable event log (250)
- Backed up real time clock

Safety Shutoff for:
- High Water Temp
- Overspeed
- Low Oil Pressure
- Low Coolant Level

Cooling System:

Coolant Drain Valve
Blower Fan and Fan Drive with Guards
Thermostats and Housing
Radiator, Package Mount
Jacket Water Pump
CAT Extended Life Coolant

Lube System:

Oil Filler and Dipstick
Oil Filter, Spin on
Lubricating Oil
Oil drain with valve
Shallow Oil Pan

Fuel System:

Primary Fuel Filter with Water Separator
Secondary Fuel Filter
Fuel Cooler
Fuel Priming Pump
Flexible Fuel Lines
Engine Fuel Transfer Pump

Generators:

Brushless, Self-Excited 2/3 Pitch, Random Wound
IP23 Protection
Class H Insulation and Temperature Rise
Terminal Box, Bottom Cable Entry
AVR350 Automatic Voltage Regulator
Neutral Bar

Finish:

All electroplated hardware or stainless steel
Anticorrosive paint protection
High gloss polyurethane paint for durability and scuff resistance

Manuals:

(1) Set Operations & Maintenance Manuals (Electronic Copy)

Tests:

Factory Standard Test @ 0.8 PF

Additional Optional Generator Set Equipment Included in Sale Quotation:

Enclosure and Options:

Sound Attenuated Level 1 Enclosure (White)
125A Load Center
GFCI Receptacle and Wiring
Enclosure Lights
Standard Air Cleaner
Internal Rubber Type Isolators

Fuel Tank:

UL142, Double Walled, 332 Gallon (Usable), Integral Fuel Tank
Fuel Level Switch
Fuel Level Gauge and Alarm
Fuel Tank Fill and Lock Cap

Circuit Breaker:	
	800A LSI Electrically Operated, 100% Rated, UL Circuit Breaker
	Auxiliary Contacts / Shunt Trip
Generator:	
	Alternator LC6134F
	105C Degree Temperature Rise over 40C Degree Ambient
	Permanent Magnet Generator
Control Panel (with Options):	
	Gen Running & Fault Relay
	Dust Proof Control Panel
	Panel Mounted Audible Alarm
	Local Annunciator
	Input Expansion Module
	Output Expansion Module
	Quadrature Droop Kit
Cooling System:	
	Pump Style Jacket Water Heater
	Low Coolant Level Shutdown
Battery Charger:	
	Battery Charger, 10A, UL listed
Miscellaneous:	
	PL444 CAT 4G Telematics
	UL 2200 Listed Package Generator Set
	IBC Seismic Certification
	EPA Emissions Certification
	South Coast AQMD Pre-Certified
	(1) Set of Operation & Maintenance Manuals (Electronic Copy)
	Standard 5 Year Factory Warranty
Local Power Systems Services Included:	
	Delivery to Jobsite - ***Off loaded by others***
	Pre-Start up Assistance
	NFPA 110 Startup w/ 4 hour Load Bank Test
	Onsite Training
	One Year Customer Value Agreement
Quinn Power Systems Services NOT Included:	
	South Coast Air Quality Management Permits
	Sales tax
	Offloading/crane service of equipment off delivery truck
	Installation, wiring, piping, plumbing or anchoring of equipment
	Diesel fuel initial or for testing

SCOPE OF WORK

QPS to Supply the following Equipment as described in above Bill of Materials:

QPS will notify City of Redlands of the following:

- Estimated factory ready to ship date upon approval.
- When equipment received in our QPS yard and unit has been inspected.
- When Equipment is unit ready for jobsite delivery
- QPS will schedule carrier and delivery of above equipment to jobsite on single flatbed truck.

City of Redlands will be responsible for the following:

- Offload equipment from truck, via forklift or crane service and set in place.
- Mount, anchor, plumb and wire QPS supplied equipment on site.
- Terminate all electrical wires, exhaust piping and fuel piping from QPS supplied equipment
- Fill out and submit QPS Startup Checklist
- Provide 2 week notice for prospective startup date.

****Startup (if applicable) will not be conducted until the following items have been completed and received by QPS****

1. Startup Checklist
- Complete installation / anchoring
- Confirm wiring termination - including customer shore power for auxiliary equipment
- Confirm fuel is available for testing - must be done before technician's arrival
- Confirm building load available if necessary - NFPA 110
2. Permit to Operate, Authority to Construct, etc.

NOTES, EXCEPTION, CLARIFICATION

Quinn Power Systems is not a general, electrical or installing contractor. Providing equipment and services as described above only.

The equipment offered is CAT standard product provided for review. This quote is based on our understanding of your written specifications listed below:
Specification Section: 16622 Standby Diesel Electric Generators for Purchase by the City of Redlands (Owner), Single Line Diagram E 5.01

Quinn Power Systems is quoting a standard engineered product that complies with the functional intent of your verbal specification. Quinn Power Systems and Caterpillar will make every effort to meet the project delivery schedule requirements. However, do to the ongoing global supply chain disruptions, Quinn Power Systems will not be liable or accept any liquidated damage clause on a purchase order.

Depending on final height of installed generator set, a working platform may be required to access the control panel and maintenance doors. Platforms are not included in this proposal, unless stated above. Call for revised quotation if required.

Included in this quote is one (1), one day/ 8hrs (max) startup/ commissioning, (NFPA110). Additional technician trips to the jobsite due to insufficient site readiness will result in additional cost, at a billable rate of $1200 per day. A change order will be required prior to the scheduling of additional technician site visits.

Startup/Commissioning Services are provided for CAT factory/ QPS supplied equipment only. Scope of work for Startup Services available upon request. Out of Scope services are billed on a Time & Material basis in the field at purchaser's expense. QPS standard labor rates apply. Technician services are provided during normal business hours Monday through Friday.

Exception taken to any NETA 3rd party or independent testing requirements. Any and all testing as listed above to be provided by QPS technicians.

Cat® C15 DIESEL GENERATOR SETS

Standby & Prime: 60Hz



Image shown might not reflect actual configuration

Engine Model	Cat® C15 In-line 6, 4-cycle Diesel
Bore x Stroke	137 mm x 171 mm (5.4 in x 6.8 in)
Displacement	15.2 L (928 in³)
Compression Ratio	16.1:1
Aspiration	Turbocharged Air-to-Air Aftercooled
Fuel Injection System	MEUI
Governor	Electronic ADEM™ A4

Model	Standby	Prime	Emission Strategy
C15	400 ekW, 500 kVA	365 ekW, 456 kVA	TIER III Non-Road

PACKAGE PERFORMANCE

Performance	Standby	Prime
Frequency	60 Hz	
Genset Power Rating	500 kVA	456 kVA
Genset power rating with fan @ 0.8 power factor	400 ekW	365 ekW
Emissions	TIER III Non-Road	
Performance Number	DM8151	DM8150
Fuel Consumption		
100% load with fan, L/hr (gal/hr)	116.8 (30.8)	107.3 (28.3)
75% load with fan, L/hr (gal/hr)	94.6 (24.9)	88.5 (23.3)
50% load with fan, L/hr (gal/hr)	69.9 (18.4)	64.4 (17.0)
25% load with fan, L/hr (gal/hr)	39.9 (10.5)	37.3 (9.8)
Cooling System[1]		
Radiator air flow restriction (system), kPa (in. water)	0.12 (0.48)	0.12 (0.48)
Radiator air flow, m³/min (CFM)	720 (25426)	720 (25426)
Engine coolant capacity, L (gal)	20.8 (5.5)	20.8 (5.5)
Radiator coolant capacity, L (gal)	54 (14)	54 (14)
Total coolant capacity, L (gal)	75 (20)	75 (20)
Inlet Air		
Combustion air inlet flow rate, m³/min (CFM)	38.8 (1370.6)	36.9 (1303.2)
Max. Allowable Combustion Air Inlet Temp, °C (°F)	49 (120)	48 (119)
Exhaust System		
Exhaust stack gas temperature, °C (°F)	487.0 (908.6)	479.4 (894.9)
Exhaust gas flow rate, m³/min (CFM)	102.8 (3629.1)	96.2 (3395.2)
Exhaust system backpressure (maximum allowable), kPa (in. water)	10.0 (40.0)	10.0 (40.0)
Heat Rejection		
Heat rejection to jacket water, kW (BTU/min)	165 (9356)	155 (8819)
Heat rejection to exhaust (total), kW (BTU/min)	462 (26284)	429 (24376)
Heat rejection to aftercooler, kW (BTU/min)	111 (6340)	98 (5578)
Heat rejection to atmosphere from engine, kW (BTU/min)	75 (4272)	69 (3937)

Alternator[3]											
Duty Cycle		Standby					Prime				
Phase		3-Phase					3-Phase				
Voltages, V		208	220	240	480	600	208	220	240	480	600
Current, Amps		1388	1312	1203	601	481	1266	1197	1098	549	439
Frame: LC6124D Excitation: AREP	Temperature Rise @ 40°C	130	105	105	105	105	105	105	105	105	105
	Motor Starting Capability @ 30% Voltage Dip, skVA	1008	1118	1309	1309	1408	1008	1118	1309	1309	1408
Frame: LC6124F Excitation: AREP	Temperature Rise @ 40°C	130	105	105	150	105	105	105	105	125	80
	Motor Starting Capability @ 30% Voltage Dip, skVA	1325	1466	1712	1712	1714	1325	1466	1712	1712	1714
Frame: LC6124B Excitation: AREP	Temperature Rise @ 40°C	150	150	150	150	150	125	125	125	125	125
	Motor Starting Capability @ 30% Voltage Dip, skVA			1055	1055	1057		901	1055	1055	1057
Frame: LC6114D Excitation: SE	Temperature Rise @ 40°C	130	105	105	105		105	105	105	105	
	Motor Starting Capability @ 30% Voltage Dip, skVA	839	930	1089	1089		839	930	1089	1089	
Frame: LC6134F Excitation: PMG	Temperature Rise @ 40°C	105	105	105	105		80	80	80	80	
	Motor Starting Capability @ 30% Voltage Dip, skVA	1104	1222	1428	1712		1104	1222	1428	1428	
Frame: LC6114B Excitation: SE	Temperature Rise @ 40°C	150	150	150	150		125	125	125	125	
	Motor Starting Capability @ 30% Voltage Dip, skVA			880	880			751	880	880	

WEIGHTS & DIMENSIONS

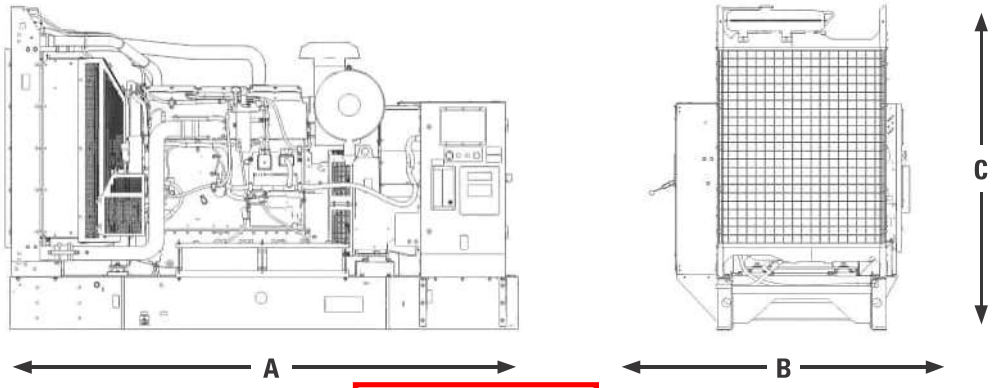

Dim "A" mm (in)	Dim "B" mm	Reference Mechanical Drawings	m "C" mm (in)	Dry Weight kg (lb)
3476 (137)	1628 (64)		2128 (84)	4066 (8963)

Note: General configuration not to be used for installation. See general dimension drawings for detail.

APPLICABLE CODES AND STANDARDS:

CSA C22.2 No 100-04, UL142, UL489, UL869, cUL/UL2200, NFPA 37, NFPA 70, NFPA 99,NFPA 110, IBC, IEC60034-1, ISO 3046, ISO 8528, NEMA MG 1-33.

Note: Codes may not be available in all model configurations. Please consult your local Cat Dealer representative for availability.

STANDBY: Output available with varying load for the duration of the interruption of the normal source power. Average power output is 70% of the standby power rating. Typical operation is 200 hours per year, with maximum expected usage of 500 hours per year.

PRIME: Output available with varying load for an unlimited time. Average power output is 70% of the prime power rating. Typical peak demand is 100% of prime rated ekW with 10% overload capability for emergency use for a maximum of 1 hour in 12. Overload operation cannot exceed 25 hours per year.

RATINGS: Ratings are based on SAE J1349 standard conditions. These ratings also apply at ISO3046 standard conditions.

DEFINITIONS AND CONDITIONS

[1] For ambient and altitude capabilities consult your Cat dealer. Air flow restriction (system) is added to existing restriction from factory.

[3] UL 2200 Listed packages may have oversized generators with a different temperature rise and motor starting characteristics. Generator temperature rise is based on a 40° C ambient per NEMA MG1-32.

LET'S DO THE WORK.™

www.cat.com/electricpower
© 2024 Caterpillar. All Rights Reserved.
Materials and specifications are subject to change without notice. The International System of Units (SI) is used in this publication.
CAT, CATERPILLAR, LET'S DO THE WORK, their respective logos, "Caterpillar Corporate Yellow", the "Power Edge" and Cat "Modern Hex" trade dress as well as corporate and product identity used herein, are trademarks of Caterpillar and may not be used without permission.

LEHE1576-03 (10/24)

Enclosures



Picture shown may not reflect actual configuration

C13/C15/C18
SOUND ATTENUATED ENCLOSURES

US Sourced
Diesel Generator Set
350 - 750 ekW 60 Hz

Features

Robust/Highly Corrosion Resistant Construction

- Factory installed on skid base
- Environmentally friendly, polyester powder baked paint
- 14 gauge steel
- Interior zinc plated fasteners
- Exterior stainless steel fasteners
- Internally mounted exhaust silencing system
- Designed and tested to comply with UL 2200 Listed generator set package
- Compression door latches providing solid door seal

Excellent Access

- Large cable entry area for installation ease
- Accommodates side mounted single or multiple breakers
- Three doors on both sides
- Vertically hinged allow 180° opening rotation and retention with door stays
- Lube oil and coolant drains piped to the exterior of the enclosure base
- Radiator fill cover

Security and Safety

- Lockable access doors which give full access to control panel and breaker
- Cooling fan and battery charging alternator fully guarded
- Fuel fill, oil fill and battery can only be reached via lockable access
- Externally mounted emergency stop button
- Designed for spreader bar lifting to ensure safety
- Stub-up area is rodent proof

Transportability

These enclosures are of extremely rugged construction to withstand outdoor exposure and rough handling common on many construction sites.

Options

- Enclosure constructed with 14 gauge steel
- Enclosure constructed with 12 gauge aluminum (5052 grade)
- Caterpillar yellow and white paint
- Control panel viewing window#
- UL Listed integral fuel tank with 670, 400, and 300 gallon capacities
- UL Listed sub base fuel tank with 660, 1000, 1800, and 2200 gallon capacities.
- Seismic certification per applicable building codes: IBC 2000, IBC 2003, IBC 2006, IBC 2009, IBC 2012, IBC 2015 CBC 2007, CBC 2010
- IBC Certification for 150 mph wind loading
- AC/DC lighting package
- 5 kW Canopy space heater to facilitate compliance with NFPA 110
- Motorized louvers and gravity discharge damper
- 125A Load Center
- GFCI outlets

Not available with aluminum enclosures.

Level 1 Sound Attenuated Enclosure (Steel) Sound Levels

Model	Standby eKW	Cooling Air Flow Rate		Ambient Capability*		Sound Pressure Levels (dBA) at 7m (23 ft)
		m³/s	cfm	°C	°F	100% Load
C13	350	8.5	18010	57	135	74
	400	8.5	18010	56	133	75
C15	350	10.4	22072	59	138	73
	400	10.4	22072	51	124	73
	450	10.4	22072	46	115	74
	500	12.5	26415	48	118	75
C18	550	8.1	17234	45	113	75
	600	8.1	17234	43	109	75
	650	12.7	26909	51	123	75
	700	12.7	26909	48	118	75
	750	12.7	26909	48	118	75

Sound Attenuated Enclosure (Aluminum) Sound Levels

Model	Standby eKW	Cooling Air Flow Rate		Ambient Capability*		Sound Pressure Levels (dBA) at 7m (23 ft)
		m³/s	cfm	°C	°F	100% Load
C13	350	8.5	-	57	135	75
	400	8.5	-	56	133	75
C15	350	10.4	22072	59	138	72
	400	10.4	22072	51	124	73
	450	10.4	22072	46	115	74
	500	12.5	26415	48	118	75
C18	550	8.1	17234	45	113	76
	600	8.1	17234	43	109	76
	650	12.7	26909	51	123	76
	700	12.7	26909	48	118	76
	750	12.7	26909	48	118	76



C13 / C15 / C18 Integral and Sub-Base Fuel Tanks

US Sourced
Diesel Generator Set
350 – 750 ekW 60 Hz

Picture shown may not represent actual package.

Features

- UL Listed for United States (UL 142) and Canada (CAN/ULC S601)
- Facilitates compliance with NFPA 30 code, NFPA 37 and 110 standards and CSA C282 code
- Dual wall
- Lockable fuel fill cap, 4” (101.6 mm) NPT
- Low fuel level warning standard, customer configurable warning or shutdown
- Primary tank leak detection switch in containment basin
- Tank design provides capacity for thermal expansion of fuel
- Fuel supply dip tube is positioned so as not to pick up fuel sediment
- Fuel return and supply dip tube is separated by an internal baffle to prevent immediate re-supply of heated return fuel
- Pressure washed with an iron phosphate solution
- Interior tank surfaces coated with a solvent-based thin-film rust preventative
- Heavy gauge steel gussets with internal lifting rings
- Primary and secondary tanks are leak tested at 20.7 kPa (3 psi) minimum
- Compatible with open packages and enclosures
- Gloss black polyester alkyd enamel exterior paint
- Welded steel containment basin (minimum of 110% of primary tank capacity)
- Direct reading fuel gauge with variable electrical output
- Emergency vents on primary and secondary tanks are sized in accordance with NFPA 30

Sub-Base

- The Sub-Base fuel tank mounts below the generator set wide base

Integral

- Integral diesel fuel tank is incorporated into the generator set base frame
- Robust base design includes linear vibration isolators between tank base and engine generator

Options

- Audio/visual fuel level alarm panel
- 5 gal (18.9 L) spill containment
- 5 gal (18.9 L) spill containment with fuel fill drop tube with in 6” (152 mm) from bottom of tank
- 5 gal (18.9 L) spill containment with overfill prevention valve and fuel fill drop tube with in 6” (152 mm) from bottom of tank
- ULC Listed 7.5 gal (28.4 L) spill containment with vent extensions, vent whistle, and drop tube facilitating compliance with CSA B139-09
- ULC Listed 7.5 gal (28.4 L) spill containment with overfill prevention valve, vent extensions, vent whistle and drop tube facilitating compliance with CSA B139-09

Integral & Sub-Base Fuel Tank Base Useable Capacities with Fuel Tank Dimensions & Weights

Integral - Width(W) 2014 mm (79.3 in)
Sub-base - Width(W) 2056 mm (81 in)
Integral* - Width(W) 2315 mm (91.2 in)
Sub-base*-Width(W) 2357 mm (92.7in)

Reference Mechanical Drawings

Sound Attenuated Enclosure

C13 Tank Design	Feature Code	Total Capacity		Useable Capacity		Tank Only						Overall Package Height with Tank			
						Dry Weight		Height 'H'		Length 'L'		Open		Enclosure	
		Liter	Gallon	Liter	Gallon	kg	lb	mm	in	mm	in	mm	in	mm	in
Integral	FTDW013	2646	699	2540	671	1569	3450	762	30.0	5461	215.0	NA	NA	2743	108.0
Sub-Base	FTDW005 / FTDW016	3941	1041	3876	1024	1659	3657	635	25.0	5550	218.5	NA	NA	2955	116.3
Sub-Base	FTDW006	6980	1844	6818	1801	2033	4483	889	35.0	6184	243.5	NA	NA	3209	126.3
Sub-Base	FTDW007	8339	2203	8244	2178	2292	5052	889	35.0	7074	278.5	NA	NA	3209	126.3
Sub-Base	FTDW011	2476	654	2435	643	1468	3236	635	25.0	3810	150.0	NA	NA	2955	116.3

C15 Tank Design	Feature Code	Total Capacity		Useable Capacity		Tank Only						Overall Package Height with Tank			
						Dry Weight		Height 'H'		Length 'L'		Open		Enclosure	
		Liter	Gallon	Liter	Gallon	kg	lb	mm	in	mm	in	mm	in	mm	in
Integral	FTDW001	1283	339	1262	333	1015	2237	639	25.0	4746	186.9	NA	NA	2619	103.0
Sub-Base	FTDW005 / FTDW016	3941	1041	3876	1024	1659	3657	635	25.0	5550	218.5	NA	NA	2955	116.3
Sub-Base	FTDW006	6980	1844	6818	1801	2228	4912	889	35.0	6184	243.5	NA	NA	3209	126.3
Sub-Base	FTDW011	2476	654	2435	643	1468	3236	635	25.0	3810	150.0	NA	NA	2955	116.3
Sub-Base	FTDW034	10887	2876	9899	2615	2847	6277	914	36	7747	305	NA	NA	3233	127.3

C18 Tank Design	Feature Code	Total Capacity		Useable Capacity		Tank Only						Overall Package Height with Tank			
						Dry Weight		Height 'H'		Length 'L'		Open		Enclosure	
		Liter	Gallon	Liter	Gallon	kg	lb	mm	in	mm	in	mm	in	mm	in
Integral	FTDW003	1446	382	1422	376	1015	2237	635	25.0	3814	150.1	NA	NA	2560	100.8
Integral*	FTDW030	2498	660	2381	629	1681	3703	762	30.0	4995	196.6	2670	105	2675	105.3
Integral*	FTDW031	5175	1367	4997	1320	2046	4510	762	30.0	6737	265.3	NA	NA	2675	105.3
Sub-Base	FTDW005 / FTDW016	3941	1041	3876	1024	1659	3657	635	25.0	5550	218.5	NA	NA	2905	114.3
Sub-Base	FTDW007	8339	2203	8244	2178	2150	4134	889	35.0	7074	278.5	NA	NA	3209	126.3
Sub-Base	FTDW011	2476	654	2435	643	1468	3236	635	25.0	3810	150.0	NA	NA	2905	114.3
Sub-Base*	FTDW032	10228	2702	9994	2640	2638	5816	889	35.0	7368	290	NA	NA	3132	123.3

*For Ratings 650, 700 &750 ekW only

Tanks with full electrical stub-up area include removable end channel. Tanks with RH stub-up include stub- up area directly below the circuit breaker or power terminal strips. Dimensions include weather-protective enclosure exhaust system.

Dual wall sub-base tanks are UL Listed and constructed in accordance with UL Standard for Safety UL 142, Steel Aboveground Tanks for Flammable and Combustible Liquids and Canada CAN/ULC S601, Standard for Shop Fabricated Steel Aboveground Horizontal Tanks for Flammable and Combustible Liquids.

Fuel tanks and applicable options facilitate compliance with the following United States NFPA Code and Standards:

NFPA 30: Flammable and Combustible Liquids Code
NFPA 37: Standard for the Installation and Use of Stationary Combustion Engines and Gas Turbines
NFPA 110: Standard for Emergency and Standby Power Systems

Fuel tanks and applicable options facilitate compliance with the following Canadian Standard and Code:
CSA C282 – Emergency Electrical Power Supply for Buildings
CSA B139-09 - Installation Code for Oil-Burning Equipment

The following sub-base fuel tanks meet Chicago code for containment and labelling:

FTDW005
FTDW008
FTDW011

©2021 Caterpillar
All rights reserved.
Materials and specifications are subject to change without notice.
The International System of Units (SI) is used in this publication.
CAT, CATERPILLAR, LET'S DO THE WORK, their respective logos, "Caterpillar Corporate Yellow" the "Power Edge" and Cat "Modern Hex" trade dress as well as corporate and product identity used herein, are trademarks of Caterpillar and may not be used without permission.

FUEL LEVEL ALARMS - FSS



CRITICAL LOW FUEL LEVEL SHUTDOWN AND LOW FUEL LEVEL ALARM

These options provide an alarm on low fuel level and a shutdown on critical low fuel level. This warning is reported by an indicator light on the control panel with an audible alarm also available as an option. This warning can additionally be relayed to a remote annunciator.

Note: Standard Fuel Fill, UL Rated Emergency-vent, Standard vent, Fuel Sender & Leak Detection Probe are included as standard on generator sets fitted with UL Listed fuel tanks.

CRITICAL HIGH FUEL LEVEL ALARM

This option provides an alarm on critical high fuel level. This warning is reported by an indicator light on the control panel with an audible alarm also available as an option. This warning can additionally be relayed to a remote annunciator.

Information contained in this publication may be considered confidential. Discretion is recommended when distributing.
Materials and specifications are subject to change without notice.

CAT, CATERPILLAR, LET'S DO THE WORK, their respective logos, "Caterpillar Corporate Yellow," the "Power Edge" and Cat "Modern Hex" trade dress as well as corporate and product identity used herein, are trademarks of Caterpillar and may not be used without permission.



Image shown may not reflect actual configuration

Fuel Level Gauge and Sender

The unit consists of a magnetically driven dial for direct reading with a snap fi t Hall Effect Module attached to the lens. This module sends an electrical signal to a remote fuel level monitor.

The module can provide ratiometric voltage output proportional to the liquid volume inside the tank.

Features

- A magnetic drive allows a signal from the float mechanism inside the tank to be transmitted through a solid bulkhead.
- The dial is designed to allow a second magnetic coupling. This is a coupling from the pointer magnet, through the sealed lens and into the Hall Effect Module.
- The magnetic connection of the Hall Effect sensor is more reliable than systems that depend on the sliding contact of variable resistor devices.
- Hall Effect is a solid state technology with no moving contacts. It counts on the fact that a magnet bends the path of electrons moving through a semiconductor. The bending of the electrons can be detected and converted into an electrical signal.
- The dial is able to provide an electrical output which can be utilized for remote monitoring of tank levels.
- The dial case is hermetically sealed by ultrasonic welding to melt and fuse the case into one solid piece. This keeps weather out, ensuring “no-fog” read ability while greatly extending mechanical life.
- The seal is a high reliability, no-gasket design.
- The plastic case is far more resistant to corrosion than any metal-cased version and is capable of withstanding broad variations in temperature. The lens and case are a special, UV stabilized plastic material.

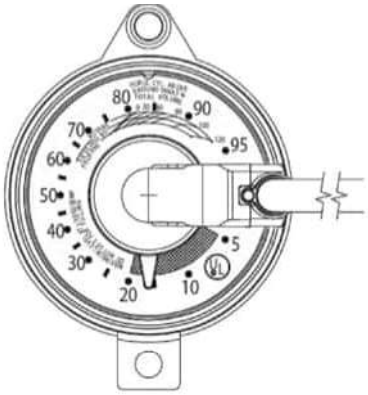

Remote-ready Dial, with Hall Effect Module

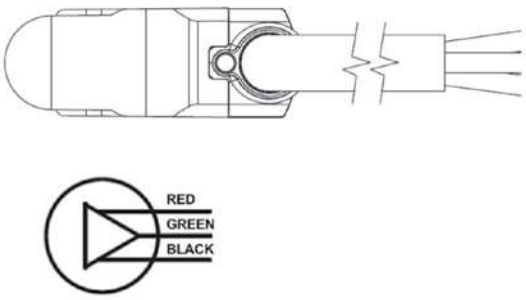

Hall Effect Module

Engine Controller



ADEM™ A4 Engine Controller

The ADEM™ A4 is the main Electronic Control Module (ECM) used on select diesel engines. The ADEM A4 provides a higher degree of control over a large number of combustion variables. The ADEM A4 is designed to control/interface Electronic Unit Injector (EUI) equipped engines. The ADEM A4 engine system is composed of the ADEM A4 ECM, control software, sensors, actuators, fuel injectors, and interface to the generator system. The prime benefit of an ADEM A4 engine system is to better control and maintain the particulate emissions, both steady state and transient, while improving engine performance.

Features

Reliable, Durable

All ADEM A4 controllers are designed to survive the harshest environments.

- Environmentally sealed, die-cast aluminum housing solates and protects electronic components from moisture and dirt contamination
- Rigorous vibration testing ensures product reliability and durability
- Accuracy maintained from –40°C to 85°C
- Electrical noise immunity to 100 volts / meter
- Internal circuits are designed to withstand shorts to + battery and – battery

Simple Servicing

Each ADEM A4 system works in combination with the Cat® ET service tool software to keep the engine operating at peak performance.

- Displays measured parameters
- Retrieves active and logged event code documenting abnormal system operation
- Performs calibrations and diagnostic tests
- Supports flash programming of new software into the ADEM A4 ECM

Self Diagnostics

Each ADEM A4 ECM has a full compliment of diagnostics. The ECM can detect faults in the electrical system and report those faults to the service technician for quick repair.

- Self-diagnostic capability pinpoints operational prob-lems in need of attention.

Advanced Features

- Enhanced performance from fuel injection timing and limiting
- Adjustable monitoring of vital engine parameters
- Programmable speed acceleration ramp rate
- Data link interfaces

Description

The ECM is housed in an environmentally sealed cast-ing. All wiring connections to the ECM are made using two sealed connectors: a single seventy-pin connector and a single one hundred twenty-pin connector.

Engine Speed Governing

Desired engine speed is calculated by the ECM and held within ±0.2 Hz for isochronous and droop mode. The ECM accounts for droop that is requested. The proper amount of fuel is sent to the injectors due to these calculations. The ECM also employs cooldown/shutdown strategies, acceleration delays on startup, acceleration ramp times and speed reference.

Fuel Limiting

Warm and cold fuel-air ratio control limits are con-trolled by the ECM. Electronic monitoring system derates, torque limit, and cranking limit, programmable torque scaling, and cold cylinder cutout mode are standard features.

Fuel Injection Timing

Master timing for injection is controlled by the ECM control. Temperature dependencies are accounted for in the fuel injection calculations.

Electronic Monitoring

Electronic monitoring of vital engine parameters can be programmed. Warning, derate, and shutdown event conditions may be customized by the user.

Information Management

The ECM stores information to assist with electronic troubleshooting. Active and logged diagnostic codes, active events, logged events, fuel consumption, engine hours, and instantaneous totals aid service technicians when diagnosing electronic faults and scheduling preventive maintenance.

Calibrations

Engine performance is optimized through injection timing. Auto/manual sensor calibrations are standard features.

On-Board System Tests

System tests are available to assist in electronic trou-bleshooting. These tests include: injector activation, injector cutout, and override of control outputs.

Data Link Interfaces

The ADEM A4 communicates with the EMCP via a dedicated communication network.

Electronic Sensing

The following sensing is available on the ADEM A4: oil pressure, fuel pressure, fuel temperature, atmospheric pressure, air inlet temperature, turbo outlet pressure, engine coolant temperature, engine speed, throttle, position, exhaust temperature, oil filter pressure differential, fuel filter pressure differential, air filter pressure differential and crankcase pressure.

Engine Controller

SPECIFICATIONS

Impervious to:

Salt spray, fuel, oil and oil additives, coolant, spray cleaners, chlorinated solvents, hydrogen sulfide and methane gas, and dust.

Input and output protection

All inputs and outputs are protected against short circuits to +battery and –battery

Input voltage range (24 VDC nominal)

18 to 32 VDC

Mounting

Engine mounted

Reverse polarity protected

Shock, withstands 20g

Temperature range

Operating: –40°C to 85°C (–40°F to 185°F)
Storage: –50°C to 120°C (–58°F to 248°F)

Vibration

Withstands 8.0g @ 24 to 2 kHz

Information contained in this publication may be considered confidential. Discretion is recommended when distributing. Materials and specifications are subject to change without notice.

CAT, CATERPILLAR, LET'S DO THE WORK, their respective logos, "Caterpillar Yellow," the "Power Edge" and Cat "Modern Hex" trade dress as well as corporate and product identity used herein, are trademarks of Caterpillar and may not be used without permission.

©2019 Caterpillar
All rights reserved.

Automatic Voltage Regulator

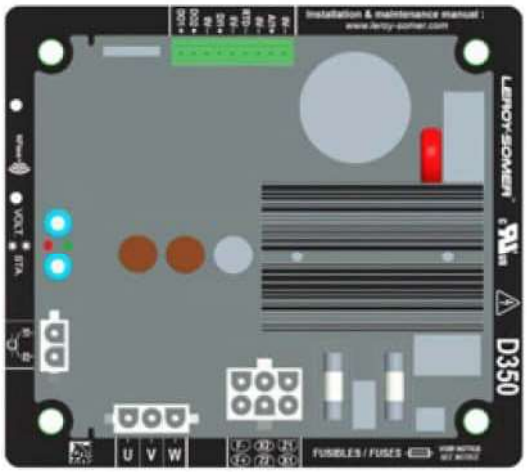

D350AVR

The D350, Digital Voltage Regulator is used to regulate alternators with a field current of less than 5 A in continuous operations, and 10 A maximum in the event of short-circuit for 10 seconds maximum.

Its design is in accordance with mounting in a generator terminal box or a control cabinet. It is required, at a minimum, to follow the local protection and safety standards, especially those specific to electrical installations for voltages of 300 VAC phase-to-neutral maximum.

NFLink™ configuration module

The D350 is equipped with NFC technology for communication and configuration purposes. The configuration module is placed over the two dedicated positioning holes on the plastic enclosure as shown below. Once the configuration is done, the NF Link must be removed as it is not supposed to be left on the D350 when it is in continuous operation.

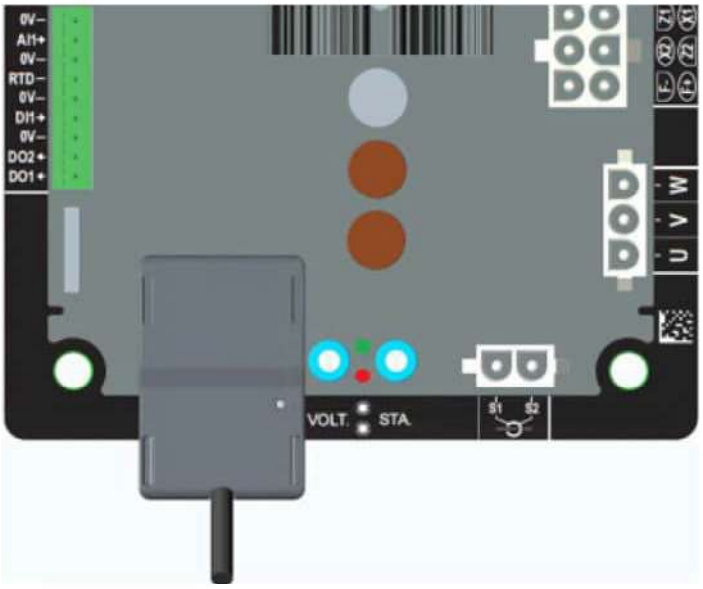

Technical Characteristics

D350 regulator can be used to perform the following functions:

Voltage regulation

- With or without reactive droop compensation (Reactive droop to allow parallel operation)
- With or without line droop compensation

Regulation of the field current, or manual mode, which allows direct control of the field current.

The D350 can also be used to:

- Adjust the reference for the regulation mode in progress, using an analogue input (0 – 10V and potentiometer)
- Monitoring of temperature sensor (Pt100 or CTP)
- Limit the minimum field current delivered to the exciter field
- Monitoring of the maximum stator current limit
- Loss of voltage sensing
- Withstand a sudden short-circuit for 10 seconds maximum in AREP, PMG
- Signals monitoring (events logger)
- 2 digital outputs for various trip, regulation mode and measurement data

Alternator voltage sensing:

- 3 phases without neutral, 2 phases or 1 phase with neutral
- Three-phase range 0 – 530 VAC
- Consumption < 2 VA

Stator current measurement with CT:

- Range 0 –1A or 0 – 5A
- Consumption < 2 VA

Power supply:

- 4 terminals for PMG, AREP, SHUNT
- Range 50 – 277 VAC
- Consumption max < 3000 VA

Field excitation:

- Rated 0 – 5A
- Short-circuit 10A max

Frequency:

- Range 10-100 Hz
- Regulation accuracy: +/-0.25% of the average of the three phases on a linear load, with harmonic distortion less than 5%
- Voltage adjustment range: 0 to 150% of the rated voltage
- Quadrature droop adjustment range: -20% to 20%
- Under frequency protection: integrated, adjustable threshold, slope adjustable from 0.5 to 3V/Hz in steps of 0.1 V/Hz
- Excitation ceiling: adjustable by configuration at 3 points
- Environment: ambient temperature from -40°C to +65°C, relative humidity of less than 95% non-condensing, mounted in a cabinet or in a terminal box

Easy Reg Advanced:

- All the D350 settings are entered/configured using the "EasyReg Advanced" software
- This program is only compatible with computers running WINDOWS® versions Windows 7 and Windows 10 operating systems

Dimensions:

- Height: 52.9 mm
- Width: 125 mm
- Length: 140 mm

Mounting:

- Holes spacing on the Length: 115 mm
- Holes spacing on the width: 100 mm

Weight:

- 0.45 kg

Conformity to standards:

- EMC: IEC 61000-6-2, IEC 61000-6-4
- Humidity: IEC 60068-1 and test in accordance with IEC 60068-2-14
- Dry heat: IEC 60068-2-2
- Damp heat: IEC 60028-2-30
- Cold: IEC 600068-2-1

D350 AVR and NFLink™ Dimensions



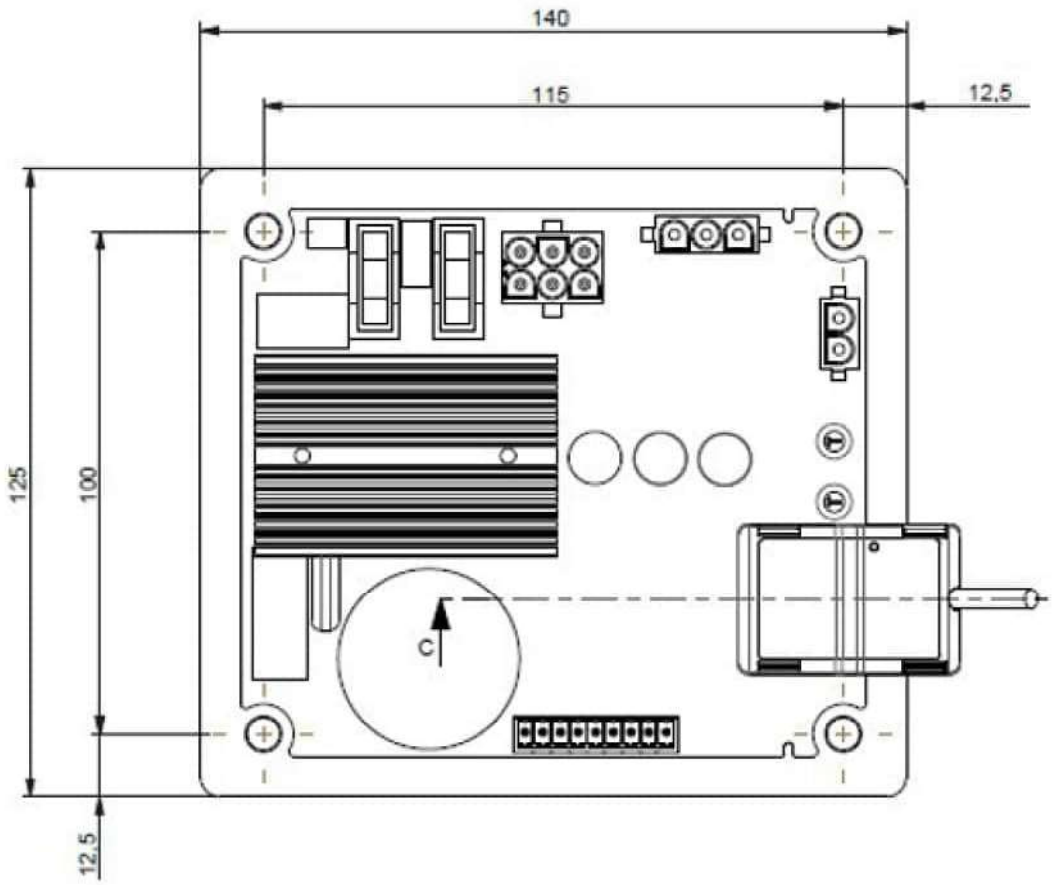

LET'S DO THE WORK.™

www.cat.com/electricpower
©2023 Caterpillar
All rights reserved.
Materials and specifications are subject to change without notice.
The International System of Units (SI) is used in this publication. CAT, CATERPILLAR, LET'S DO THE WORK, their respective logos, "Caterpillar Corporate Yellow", the "Power Edge" and Cat "Modern Hex" trade dress as well as corporate and product identity used herein, are trademarks of Caterpillar and may not be used without permission.

LEHE1923-00 (03/23)

General and Functional Specifications*

- Conformity: ±3% at 5 VDC
- Operating temperature: -40° to 80°C (-40°F to 176°F)
- Accuracy: ±4% of full scale. (float gauge errors not included.)
- Repeatability: ±1%.
- Operational voltage range: 3.5 to 6.0 VDC
- Output voltage: ratiometric 10−90% of input voltage @ 10−90% volume
- Resolution – infinite
- Operating current: 4.5 mA
- Output current: ± 1 mA
- Hall Effect modules are UL classified as intrinsically safe for Class 1, Division 1, Groups C and D (hazardous locations)

Gauge Materials of Construction*

- Head – die cast aluminum.
- Center shaft, support tube, and float rod – tempered aluminum
- Gears, cross stud, and bearing – stainless steel
- Drive magnet – alnico
- Gear housing – acetal
- Float – nitrile rubber

Dial Materials of Construction*

- Crystal and case: polycarbonate.
- Dial – painted aluminum

*Materials and specifications are subject to change without notice. Ratings subject to change due to temperature and other environmental considerations.

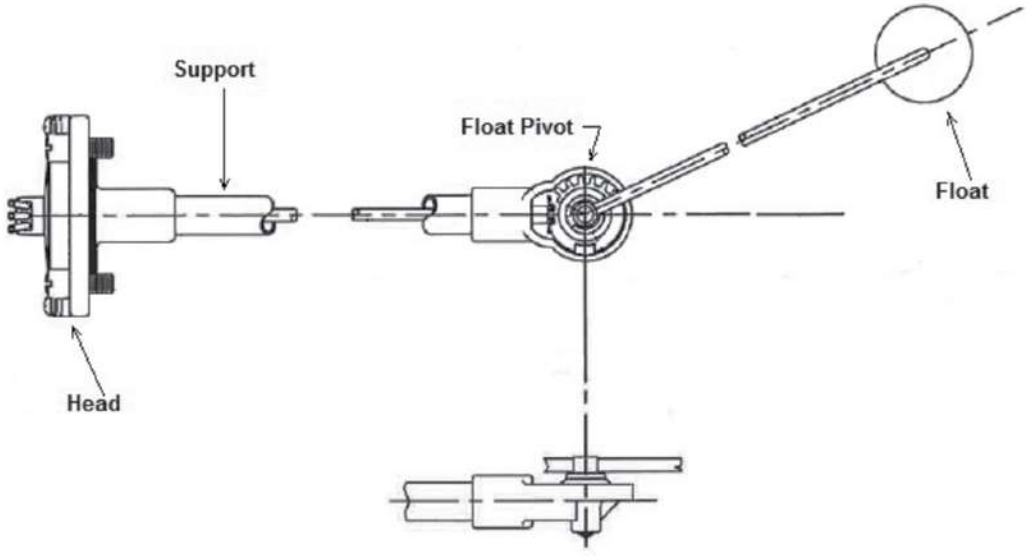

www.Cat-ElectricPower.com
©2015 Caterpillar
All rights reserved.

Materials and specifications are subject to change without notice. CAT, CATERPILLAR, their respective logos, “Caterpillar Yellow”, the “Power Edge” trade dress as well as corporate and product identity used herein, are trademarks of Caterpillar and may not be used without permission.

GCCP 1.5 Control Panel



Image shown may not reflect actual configuration

GCCP 1.5 - Control Panel

The GCCP 1.5 is an easy to use Synchronizing Auto Start Control Module suitable for use in a multi-generator load-share system,designed to synchronize up to 32 generators including electronic and non-electronic engines. The GCCP 1.5 monitors the generator and indicates operational status and fault conditions, automatically starting or stopping the engine on load demand or fault condition.

Description

System alarms are annunciated on the LCD screen (multiple language options available), illuminated LED and audible sounder. The event log will record 250 events to facilitate easy maintenance. An extensive number of fixed and flexible monitoring, metering and protection features are included as well as comprehensive communication and system expansion options. Using the PC Configuration Suite Software allows easy alteration of the operational sequences, timers and alarms. With all communication ports capable of being active at the same time, the genset controller is ideal for a wide variety of demanding load share applications.

Full Range of Attachments

- Wide range of system expansion attachments, designed specifically to work with the GCCP controller
- Flexible packaging options for easy and cost effective installation

Benefits

- 132 x 64 pixel ratio display for clarity
- Real-time clock provides accurate event logging
- Ethernet communication provides built in advanced remote monitoring.
- Can be integrated into building management systems (BMS) and programmable logic control (PLC)
- IP65 rating (with supplied gasket) offers increased resistance to water ingress
- Advanced Internal PLC editor allows user configurable functions to meet specific application requirements.
- Generator load demand
- Automatic hours run balancing
- Mains (Utility) de-coupling/Test mode
- Dead bus sensing
- Bus failure detection
- Direct governor and AVR control
- Volts and frequency matching
- kW and kVAr load sharing
- Dead bus synchronizing

Features

- 4-line back-lit LCD text display
- LED and LCD alarm indication
- Comprehensive synchronising & load-sharing capabilities (uL site certification required)
- Built-in AVR control
- Base load (kW export) functionality
- Positive & negative kVAr export control
- Mains (utility) de-coupling protection
- Generator power (kW, kV Ar, kV A & pf) monitoring
- Overload (kW & kV Ar) protection
- Reverse power (kW & kV Ar) protection
- Unbalanced load protection
- Independent earth fault protection
- Advanced integral PLC editor
- 11 Configurable inputs, 8 Configurable outputs
- Configurable flexible sensor inputs
- User configurable RS232, RS485 and Ethernet communications
- MODBUS RTU & TCP support
- User configurable MODBUS pages
- Advanced SMS control and fault messaging (additional GSM modem required)
- Easy access diagnostic pages including modem diagnostic pages
- Data logging and trending
- CAN, MPU and Frequency speed sensing
- Front panel editing with PIN protection
- Configuration Suite PC software via USB
- LED and LCD alarm indication
- Configurable display languages
- USB connectivity
- Customisable status screens
- Five key menu navigation
- 3 Configurable maintenance alarms
- Multiple date and time run scheduler
- Manual fuel pump control
- Charge alternator failure protection
- Load switching (load shedding and dummy load control
- Configurable event log (250)
- Backed up real time clock

World Wide Product Support

- Cat dealers provide extensive pre and post sale support
- Cat dealers have over 1,600 dealer branch stores operating in 200 countries

GCCP 1.5 Control Panel

SPECIFICATIONS

DC SUPPLY

CONTINUOUS VOLTAGE RATING
8 V to 35 V continuous

CRANKING DROPOUTS
Able to survive 0 V for 50 mS, providing supply was at least 10 V before dropout and supply recovers to 5 V. This is achieved without the need for internal batteries.

MAXIMUM OPERATING CURRENT
460 mA at 12 V, 245 mA at 24 V

MAXIMUM STANDBY CURRENT
375 mA at 12 V, 200 mA at 24 V

CHARGE FAIL/EXCITATION RANGE
0 V to 35 V

GENERATOR & BUS

Voltage Range: 15V to 333 V AC (L to N)
Frequency Range: 3.5 Hz to 75 Hz

MAGNETIC PICK-UP

Voltage Range: +/- 0.5 V to 70 V
Frequency Range: 10,000 Hz (max)

BUILT-IN AVR CONTROL

MINIMUM LOAD IMPEDANCE
1000Ω, Fully isolated

GAIN VOLTAGE
0 V to 10 V DC, Fully isolated

OFFSET VOLTAGE
+/- 10 V DC, Fully isolated

OUTPUTS

OUTPUT A (FUEL)
15 A DC at supply voltage

OUTPUT B (START)
15 A DC at supply voltage

OUTPUTS C & D
8 A AC at 250 V AC (Volt free)

AUXILIARY OUTPUTS E, F, G, H, I & J
2 A DC at supply voltage

DIMENSIONS

OVERALL
240 mm x 181 mm x 42 mm (9.4" x 6.8" x 1.6")

PANEL CUTOUT
220 mm x 160 mm (8.7" x 6.3")

MAXIMUM PANEL THICKNESS
8 mm (0.3")

OPERATING TEMPERATURE RANGE
-30 Deg C to +70 Deg C
-22 Deg F to +158 Deg F

STORAGE TEMPERATURE RANGE
-40 Deg C to +85 Deg C
-40 Deg F to +185 Deg F

Standards
UL, cUL Listed
Electro-Magnetic Compatibility BS EN 61000-6-2/6-4
Electrical Safety: BS EN 60950
Temperature: BS EN 60068-2-1, BS EN 60068-2-2
Vibration: BS EN 60068-2-6
Humidity: BS EN 60068-2-30, BS EN 60068-2-78
Shock: BS EN 60068-2-27
Degrees of protection provided by enclosures: BS EN 60529 Ingress Protection: IP65 - Front of module when installed into the control panel with the optional sealing gasket.

Input Expansion Module

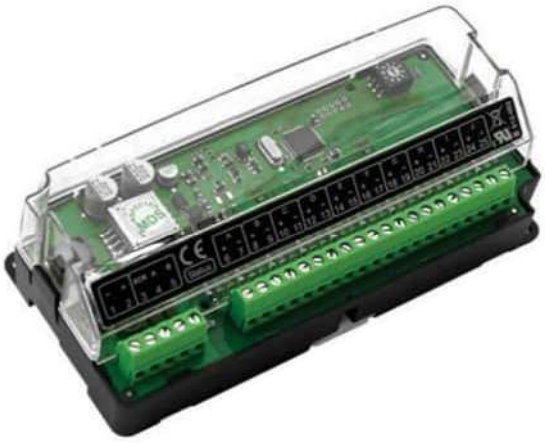

Picture shown may not reflect actual configuration.

Input Expansion Module

The Ratiometric Input Expansion module is used in conjunction with supported controllers to provide additional, flexible, input functionality. The module's ID switch is configurable from the module and the 10 inputs can be configured from within the 'host controller'.

The ratiometric inputs can be configured in a number of ways to connect to digital switches, resistive sensors, 0 – 10 V DC signals or 4 – 20 mA signals.

LED indication is provided for 'Power On' and 'Link Lost'.

Features

- Power On/Link Lost LED
- 10 inputs configurable for digital/resistive 4 – 20 mA and 0 – 10 V DC
- A maximum of 4 modules can be connected to 1 host control module to provide up to 40 additional configurable inputs
- Works up to 1.2 km (0.75 miles) from the host controller
- Terminal strip connection for quick and easy set-up

ENVIRONMENTAL TESTING STANDARD

ELECTRO-MAGNETIC COMPATIBILITY

BS EN 61000-6-2
EMC Generic Immunity Standard for the Industrial Environment
BS EN 61000-6-4
EMC Generic Emission Standard for the Industrial Environment

ELECTRICAL SAFETY

BS EN 60950
Safety of Information Technology Equipment, including Electrical Business Equipment

TEMPERATURE

BS EN 60068-2-1
Ab/Ae Cold Test -30 °C BS EN 60068-2-2
Bb/Be Dry Heat +70°C

VIBRATION

BS EN 60068-2-6
Ten sweeps in each of three major axes
5 Hz to 8 Hz @ +/-7.5 mm, 8 Hz to 500 Hz @ 2 gn

SHOCK

BS EN 60068-2-27
Three shocks in each of three major axes 15 gn in 11 Ms

HUMIDITY

BS EN 60068-2-30
Db Damp Heat Cyclic 20/55°C @ 95% RH 48 Hours
BS EN 60068-2-78
Cab Damp Heat Static 40°C @ 93% RH 48 Hours

DEGREES OF PROTECTION PROVIDED BY ENCLOSURES BS EN 60529

IP21

SPECIFICATION

CONTINUOUS VOLTAGE RATING

8 V to 35 V Continuous

CRANKING DROPOUTS

Able to survive 0 V for 50 mS, providing supply was at least 10 V before dropout and supply recovers to 5 V. This is achieved without the need for internal batteries. LEDs light will not be maintained during cranking.

MAXIMUM OPERATING CURRENT

292 mA at 12 V, 167 mA at 24 V mA at 24 V

MAXIMUM STANDBY CURRENT

101 mA at 12 V, 167 mA at 24 V

INPUTS

10 inputs configurable for digital/resistive (3k ohms) 4 – 20 mA and 0 – 10 V DC

DIMENSIONS OVERALL

165 mm x 76 mm x 49 mm

STROAGE TEMPERATURE RANGE

-40°C to + 85°C

LET'S DO THE WORK.™

www.cat.com/electricpower
©2023 Caterpillar
All rights reserved.
Materials and specifications are subject to change without notice.
The International System of Units (SI) is used in this publication. CAT, CATERPILLAR, LET'S DO THE WORK, their respective logos, "Caterpillar Corporate Yellow", the "Power Edge" and Cat "Modern Hex" trade dress as well as corporate and product identity used herein, are trademarks of Caterpillar and may not be used without permission.

LEHE2019-01 (03/23)

Output Expansion Module



Picture shown may not reflect actual configuration.

Output Expansion Module

Output relay expansion module for use with compatible control modules. The Output Expansion module has been designed to extend a host module's output capabilities.

A maximum of 10 Output Expansion modules can be connected to an individual module at any one time. All outputs are configurable via the host controller.

The module will work up to 1 KM (0.6miles) from the host control module.

Features

- Power On/Link Lost LED ID SWITCH
- 10 expansion modules can be connected to 1 host controller at a time
- 8 configurable relay contacts with LED indicators
- 4 Normally Open (N/O)
- 4 Change Over (C/O)
- Terminal strip connection for quick and easy set-up

ENVIRONMENTAL TESTING STANDARD

ELECTRO-MAGNETIC COMPATIBILITY

BS EN 61000-6-2
EMC Generic Immunity Standard for the Industrial Environment
BS EN 61000-6-4
EMC Generic Emission Standard for the Industrial Environment

ELECTRICAL SAFETY

BS EN 60950
Safety of Information Technology Equipment, including Electrical Business Equipment

TEMPERATURE

BS EN 60068-2-1
Ab/Ae Cold Test -30 °C BS EN 60068-2-2
Bb/Be Dry Heat +70°C

VIBRATION

BS EN 60068-2-6
Ten sweeps in each of three major axes
5 Hz to 8 Hz @ +/-7.5 mm, 8 Hz to 500 Hz @ 2 gn

SHOCK

BS EN 60068-2-27
Three shocks in each of three major axes 15 gn in 11 Ms

HUMIDITY

BS EN 60068-2-30
Db Damp Heat Cyclic 20/55 °C @ 95% RH 48 Hours BS EN 60068-2-78
Cab Damp Heat Static 40 °C @ 93% RH 48 Hours

SPECIFICATION

CONTINUOUS VOLTAGE RATING

8 V to 35 V Continuous

CRANKING DROPOUTS

Able to survive 0 V for 50 mS, providing supply was at least 10 V before dropout and supply recovers to 5 V. This is achieved without the need for internal batteries. LEDs and backlight will not be maintained during cranking.

MAXIMUM OPERATING CURRENT

325 mA at 12 V, 152 mA at 24 V

MAXIMUM STANDBY CURRENT

70 mA at 12 V, 32 mA at 24 V

AUXILIARY RELAY CONTACTS

2 Amp DC rated voltage free

DIMENSIONS OVERALL

165 mm x 76 mm x 49 mm
6.5" x 3" x 1.9"

LET'S DO THE WORK.™

www.cat.com/electricpower
©2023 Caterpillar
All rights reserved.
Materials and specifications are subject to change without notice.
The International System of Units (SI) is used in this publication. CAT, CATERPILLAR, LET'S DO THE WORK, their respective logos, "Caterpillar Corporate Yellow", the "Power Edge" and Cat "Modern Hex" trade dress as well as corporate and product identity used herein, are trademarks of Caterpillar and may not be used without permission.

LEHE2020-01 (03/23)

DSEGenset

DSE2152
ANALOGUE OUTPUT EXPANSION MODULE

The DSE2152 Analogue Output Expansion Module is used in conjunction with supported DSENet controllers to provide 6 additional outputs. The outputs can be individually configured as 0 to 10 V or 4 to 20 mA, via the 'host controller'.

LED indication is provided for 'Power On' and 'Link Lost'

The DSE2152 is designed to be mounted within a control panel, either on the panel DIN rail utilising the integral mounts, or chassis mounted, utilising the mounting holes.

Up to four DSE2152 modules can be linked together to provide up to 24 additional outputs. An ID switch is provided on the module for identification.

ENVIRONMENTAL TESTING STANDARDS

ELECTRO MAGNETIC COMPATIBILITY
BS EN 61000-6-2
EMC Generic Immunity Standard for the Industrial Environment
BS EN 61000-6-4
EMC Generic Emission Standard for the Industrial Environment

ELECTRICAL SAFETY
BS EN 60950
Safety of Information Technology Equipment, including Electrical Business Equipment

TEMPERATURE
BS EN 60068-2-1
Ab/Ae Cold Test -30 °C
BS EN 60068-2-2
Bb/Be Dry Heat +70 °C

VIBRATION
BS EN 60068-2-6
Ten sweeps in each of three major axes
5 Hz to 8 Hz at +/-7.5 mm, 8 Hz to 500 Hz at 2 gn

HUMIDITY
BS EN 60068-2-30
Db Damp Heat Cyclic 20/55 °C at 95% RH 48 Hours
BS EN 60068-2-78
Cab Damp Heat Static 40 °C at 93% RH 48 Hours

SHOCK
BS EN 60068-2-27
Three shocks in each of three major axes
15 gn in 11 mS

DEGREES OF PROTECTION PROVIDED BY ENCLOSURES
BS EN 60529
IP21

COMPREHENSIVE FEATURE LIST TO SUIT A WIDE VARIETY OF GEN-SET APPLICATIONS

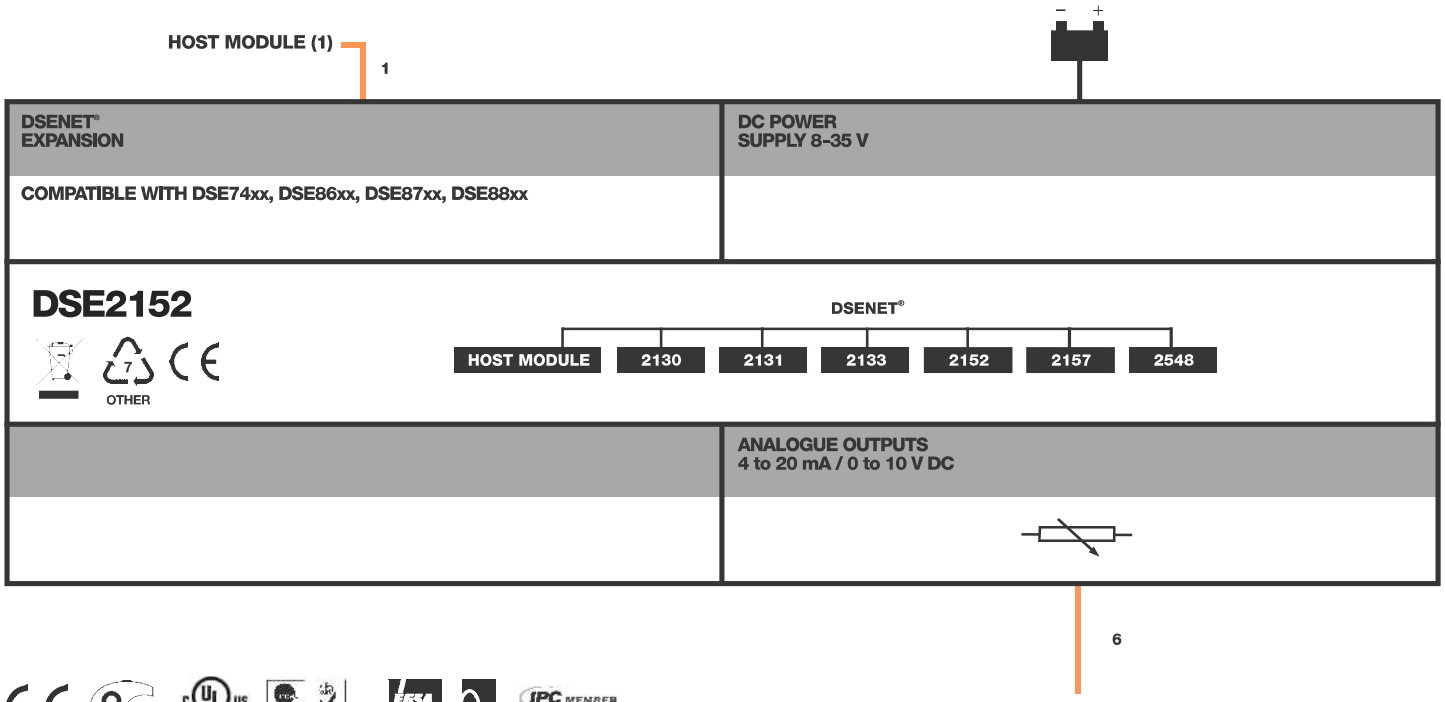

DSEGenset

DSE2152
ANALOGUE OUTPUT EXPANSION MODULE

DSE**2152**

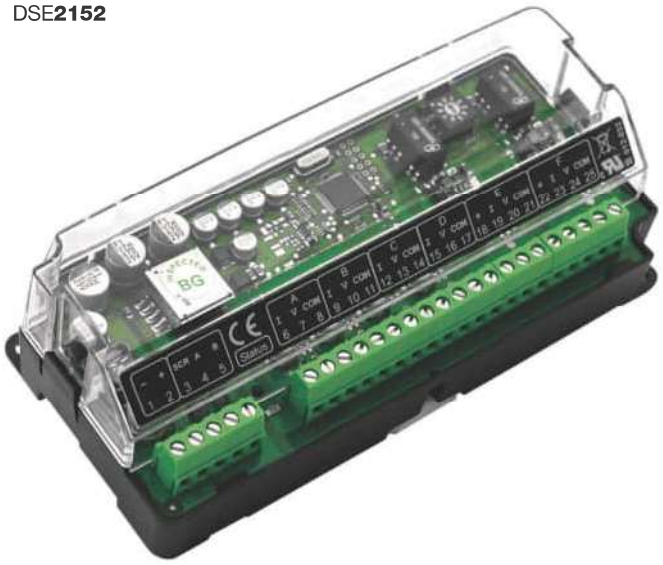

KEY FEATURES
- Analogue output expansion module for supported DSENet controllers
- 6 outputs configurable as 4 to 20mA (0 to 20mA) and 0 to 10 V DC
- Power On/Link Lost LED
- A maximum of 4 modules can be connected to 1 host control module to provide up to 24 additional configurable outputs
- Works up to 1.2 km (0.75 miles) from the host controller
- Terminal strip conection for quick and easy set up
- Simplified configuration using DSE PC Configuration Suite Software through host controller

KEY BENEFIT
- Ideal for applications where additional control monitoring is critical

SPECIFICATION

DC SUPPLY
8 V to 35 V continuous

CRANKING DROPOUTS
Able to survive 0 V for 50 mS, providing supply was at least 10 V before dropout and supply recovers to 5 V. This is achieved without the need for internal batteries. LEDs will not be maintained during cranking.

MAXIMUM OPERATING CURRENT
120 mA at 12 V, 60 mA at 24 V

OUTPUTS
OUTPUT A, B, C & D
Non-Isolated
Configurable As: 4 to 20 mA DC or
0 V to 10 V DC

OUTPUT E & F
Optional Isolation
Configurable As: 4 to 20 mA DC or
0 V to 10 V DC

DIMENSIONS
OVERALL
165 mm x 76 mm x 49 mm
6.5” x 3” x 1.9”

STORAGE TEMPERATURE RANGE
-40 °C to +85 °C
-40 °F to +185 °F

OPERATING TEMPERATURE RANGE
-30°C to +70°C
-22 °F to +158 °F

RELATED MATERIALS

TITLE	PART NO’S
DSE2152 Installation Instructions	053-134
DSE2152 Operator Manual	057-141
DSE7410/20 Data Sheet	055-108
DSE8610 Data Sheet	055-083
DSE8620 Data Sheet	055-099
DSE8660 Data Sheet	055-086
DSE8710 Data Sheet	055-184
DSE8760 Data Sheet	055-185
DSE8810 Data Sheet	055-116
DSE8860 Data Sheet	055-139

DEEP SEA ELECTRONICS PLC UK
Highfield House, Hunmanby Industrial Estate, Hunmanby YO14 0PH
TELEPHONE +44 (0) 1723 890099 **FACSIMILE** +44 (0) 1723 893303
EMAIL sales@deepseaplc.com **WEBSITE** www.deepseaplc.com

DEEP SEA ELECTRONICS INC USA
3230 Williams Avenue, Rockford, IL 61101-2668 USA
TELEPHONE +1 (815) 316 8706 **FACSIMILE** +1 (815) 316 8708
EMAIL sales@deepseausa.com **WEBSITE** www.deepseausa.com

Deep Sea Electronics Plc maintains a policy of continuous development and reserves the right to change the details shown on this data sheet without prior notice. The contents are intended for guidance only.

Registered in England & Wales No.01319649
VAT No.316923457

Annunciators



Picture shown may not reflect actual configuration.

Local Annunicator Module

It is an LED expansion module that can be used with compatible control modules. The module has been designed to display a maximum of eight individual LED indications up to a maximum distance of 1 KM (0.6 miles).

The Annunciator will consist of two modules to provide a 16 Channel Fault annunciation.

It is presented in a vertical enclosure. It includes an alarm sounder that is triggered when the host controller detects an alarm condition. The alarm can be muted using the front push button.

The Panels will be fitted with removable label cards which can be used to identify the standard NFPA alarms if desired.

It includes individual LEDs for each channel and a 'Power On' LED that flashes when the link with the host controller is lost.

Features

- The Local annunciator has an integral Sounder/Horn
- Eight configurable LEDs (per module)
- Works up to 1 KM (0.6 miles) from the host controller
- A single controller can support five Caterpillar configured remote annunciator control boxes

ENVIRONMENTAL TESTING STANDARD

ELECTRO-MAGNETIC COMPATIBILITY

BS EN 61000-6-2
EMC Generic Immunity Standard for the Industrial Environment
BS EN 61000-6-4
EMC Generic Emission Standard for the Industrial Environment

ELECTRICAL SAFETY

BS EN 60950
Safety of Information Technology Equipment, including Electrical Business Equipment

TEMPERATURE

BS EN 60068-2-1
Ab/Ae Cold Test -30 °C BS EN 60068-2-2
Bb/Be Dry Heat +70°C

VIBRATION

BS EN 60068-2-6
Ten sweeps in each of three major axes
5 Hz to 8 Hz @ +/-7.5 mm, 8 Hz to 500 Hz @ 2 gn

SHOCK

BS EN 60068-2-27
Three shocks in each of three major axes 15 gn in 11 Ms

HUMIDITY

BS EN 60068-2-30
Db Damp Heat Cyclic 20/55 °C @ 95% RH 48 Hours
BS EN 60068-2-78
Cab Damp Heat Static 40 °C @ 93% RH 48 Hours

DEGREES OF PROTECTION PROVIDED BY ENCLOSURES BS EN 60529

IP65 – Front of module when installed into the control panel with the supplied sealing gasket.

SPECIFICATION

CONTINUOUS VOLTAGE RATING

8 V to 35 V Continuous

CRANKING DROPOUTS

Able to survive 0 V for 50 mS, providing supply was at least 10 V before dropout and supply recovers to 5 V. This is achieved without the need for internal batteries. LEDs and backlight will not be maintained during cranking.

MAXIMUM OPERATING CURRENT

112 mA at 12 V, 53 mA at 24 V

MAXIMUM STANDBY CURRENT

74 mA at 12 V, 35 mA at 24 V

DIMENSIONS OVERALL

355 mm x 369 mm x 90 mm
13.6" x 14.5" x 3.5"

PANEL CUT-OUT

286 mm x 326 mm x 93 mm
11.2" x 12.8" x 3.6"

MAXIMUM PANEL THICKNESS

8 mm
0.3"

LET'S DO THE WORK.™

www.cat.com/electricpower
©2023 Caterpillar
All rights reserved.
Materials and specifications are subject to change without notice.
The International System of Units (SI) is used in this publication. CAT, CATERPILLAR, LET'S DO THE WORK, their respective logos, "Caterpillar Corporate Yellow", the "Power Edge" and Cat "Modern Hex" trade dress as well as corporate and product identity used herein, are trademarks of Caterpillar and may not be used without permission.

LEHE2021-01 (03/23)

CATERPILLAR®

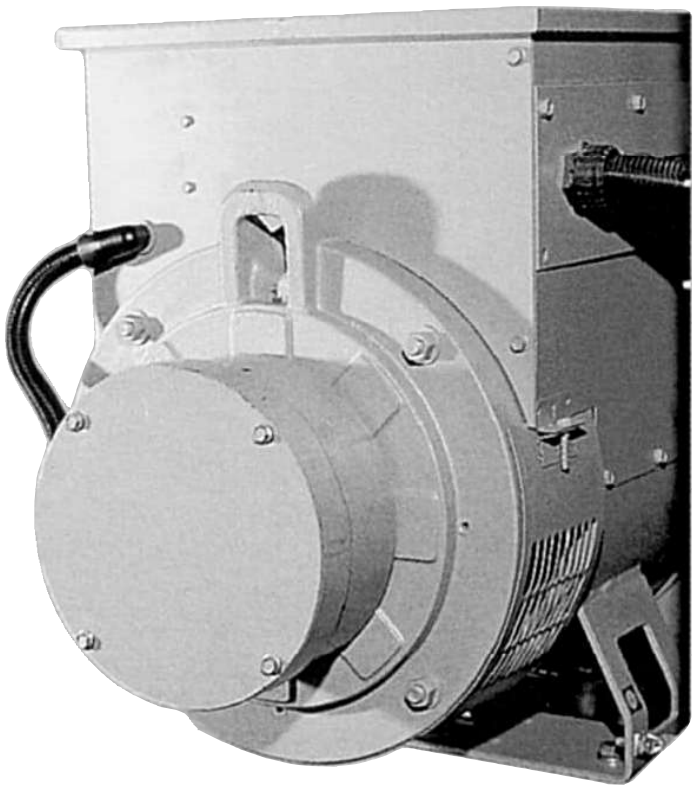

AVR12 – PERMANENT MAGNET GENERATOR

The permanent magnet generator (PMG) option upgrades the excitation system of the generator from the standard self-excited system to a separately-excited system. The PMG couples to the non-drive end of the generator and provides an independent source of excitation power that ensures initial voltage build-up. The PMG improves the voltage response of the generator during transient load application, such as motor starting, and provides a sustained short-circuit current for the operation of protective devices. Isolation of the excitation power ensures that regulation is not affected by non-linear distorting loads.

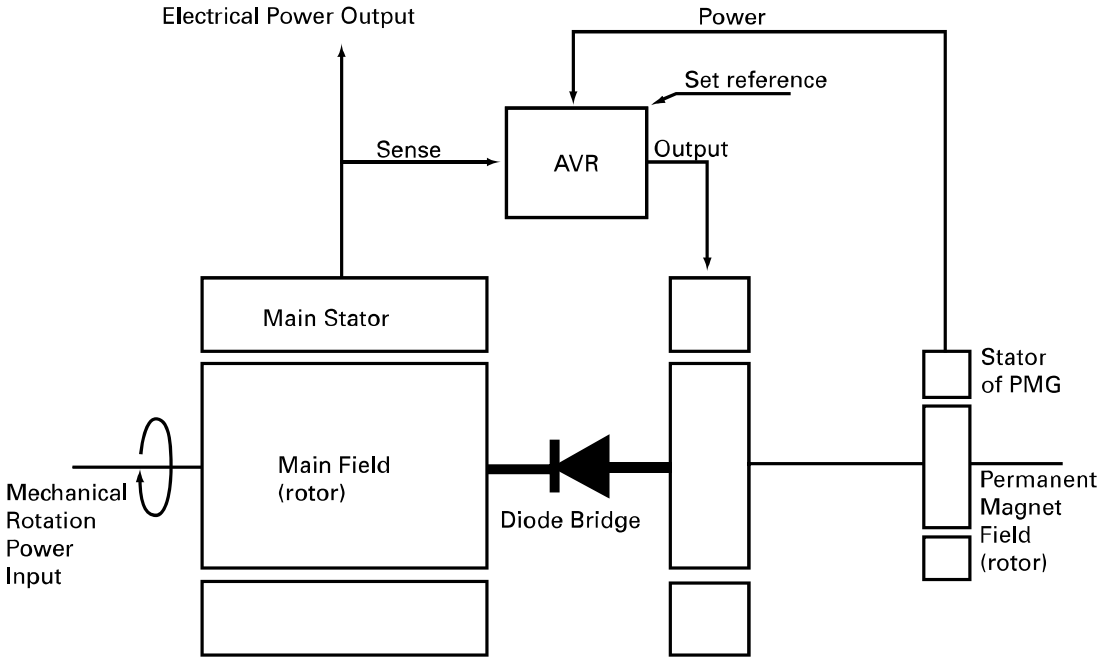

BLOCK DIAGRAM OF PMG

© 2005 Caterpillar
All Rights Reserved.
Printed in U.S.A.

Circuit Breakers



Moulded Case Circuit Breakers:

100 A – 3000 A
200 kW – 750 kW Gensets

Features

- 100% UL Listing
- Electronic Trip Units
- Double insulation
- Clear indication of breaker status
- Can be used in normal operation in an ambient of –25°and+70° C
- Auxiliary contacts available
- Insulating case constructed from fiberglass reinforced synthetic resin
- Anti-corrosion treatment on all metal parts
- Optional 2 or 3 Circuit Breakers

Conformity with International Standards

Circuit Breakers have been designed to comply with these major standards:

- UL 489
- CSA22.2
- IEC 60947-2
- NEMA AB1

C9, C13, C15, C18 Circuit Breakers

Manually Operated Circuit Breakers

Current (A)	Frame	Number of Poles	Interrupting Ratings (kA ms)			Trip Unit	(Lugs) Cable Size Range / Phase	Auxiliary Options
			240V	480V	600V			
100	H	3	65	35	18	Electronic LSI	8-3/0 AWG	Form C (1 NO + 1 NC) Shunt Trip 24 VDC
250	J	3	65	35	18		(2) 3/0 – 250 kcmil	
400	XT5	3	65	35	18	Electronic LS/I (S or I) or LSI	(2) 2/0 – 500 kcmil	1 Form C + 1 Bell Alarm 60 VAC/VDC Shunt Trip 24 VDC
600	XT6	3	65	35	20		(3) 2/0 – 400 kcmil	
800	XT6	3	65	35	20		(3) 2/0 – 400 kcmil	
1200	XT7	3	65	50	25		(4) 4/0 – 500 kcmil	1 Form C + 1 Bell Alarm Shunt Trip 24 VAC/VDC
1600	T8	3	65	35	18	Electronic LSI	BUS BAR	Form C (1 NO + 1 NC) Shunt Trip 24 VDC
2000	T8	3	65	35	18		BUS BAR	
2500	T8	3	65	35	18		BUS BAR	
3000	T8	3	65	35	18		BUS BAR	

Electrically Operated Circuit Breakers

Current (A)	Frame	Number of Poles	Interrupting Ratings (kA ms)			Trip Unit	(Lugs) Cable Size Range / Phase	Auxilliary Options
			240V	480V	600V			
800	XT7M	3	65	50	25	Electronic LSI	(4) 4/0 – 500 kcmil	2 Form C + 1 Bell Alarm 24 VDC
1200	XT7M	3	65	50	25	Electronic LSI	(4) 4/0 – 500 kcmil	2 Form C + 1 Bell Alarm 24 VDC
2000	T 8M-S	3	125	125	100	Electronic LSI	BUS BAR	2 Form C + 1 Bell Alarm 24 VDC
3000	T 8M-S	3	125	125	100	Electronic LSI	BUS BAR	2 Form C + 1 Bell Alarm 24 VDC

L-I Mode

- Long Time / Overload Protection, "L" has an adjustable trip threshold and adjustable time delay.
- Instantaneous Short Circuit Protection, "I" has an adjustable short circuit trip threshold and once exceeded will cause the circuit breaker to trip instantaneously.

L-S Mode

- Long Time / Overload Protection, "L" has an adjustable trip threshold and adjustable time delay.
- Short Circuit Protection, "S" has an adjustable short circuit trip threshold and adjustable time delay if necessary for coordinating with downstream loads.
- Instantaneous Short Circuit Protection, "I" is still included, but the threshold level is not adjustable and exists at a predetermined level.

Electronic L-S-I Trip Units

- Long Time/Overload Protection, "L" has an adjustable trip threshold and adjustable time delay.
- Short Circuit Protection, "S" has an adjustable short circuit trip threshold and adjustable time delay if necessary for coordinating with downstream loads.
- Instantaneous Short Circuit Protection, "I" has an adjustable short circuit trip threshold and once exceeded will cause the circuit breaker to trip instantaneously.

Circuit Breakers

Single Breaker Options (250 – 3000A)

Model	Current (A)	Operation
C9	100	Manually Operated
C9	250	Manually Operated
C9	400	Manually Operated
C9 , C13 , C15 , C18	600	Manually Operated
C9 , C13 , C15 , C18	800	Manually Operated or Electrically Operated
C9 , C13 , C15 , C18	1200	Manually Operated or Electrically Operated
C13 , C15 , C18	1600	Manually Operated
C15 , C18	2000	Manually Operated or Electrically Operated
C18	2500	Manually Operated
C18	3000	Manually Operated or Electrically Operated

Multiple Breaker Options

Model	Main Breaker Box		Auxiliary Box
	1st Breaker (Amps) Manually Operated	2nd Breaker (Amps) Manually Operated	Breaker (Amps) Manually Operated
C9 , C13 , C15 , C18	100	100, 250, 400, 600, 800, or 1200	3rd Breaker: 100, 250 or 400 (Not availabe if 1st & 2nd Breaker = 1200A)
C9 , C13 , C15 , C18	250		
C9 , C13 , C15 , C18	400		
C9 , C13 , C15 , C18	600		
C9 , C13 , C15 , C18	800		
C9 , C13 , C15 , C18	1200		
C13 , C15 , C18	1600	Not Available	2nd Breaker: 100, 250 or 400
C15 , C18	2000		
C18	2500		
C18	3000		

XT7 – XT7 M Ekip Dip LSI
L-S-I Functions

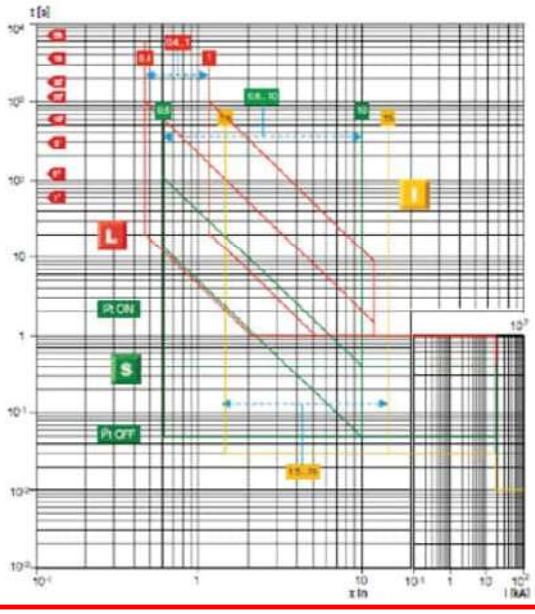

Figure 9

CATERPILLAR®

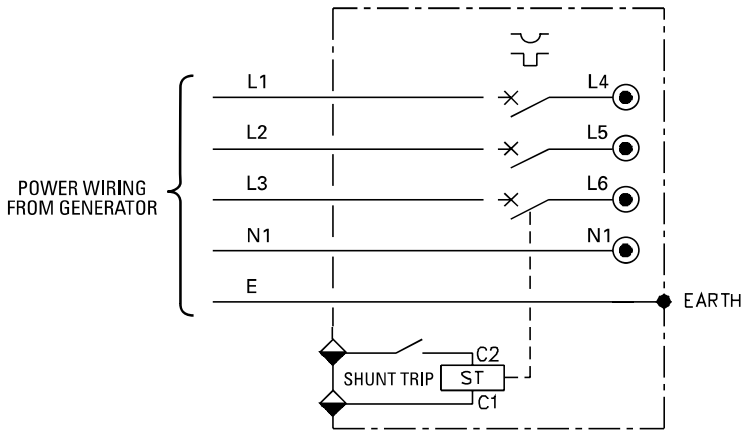

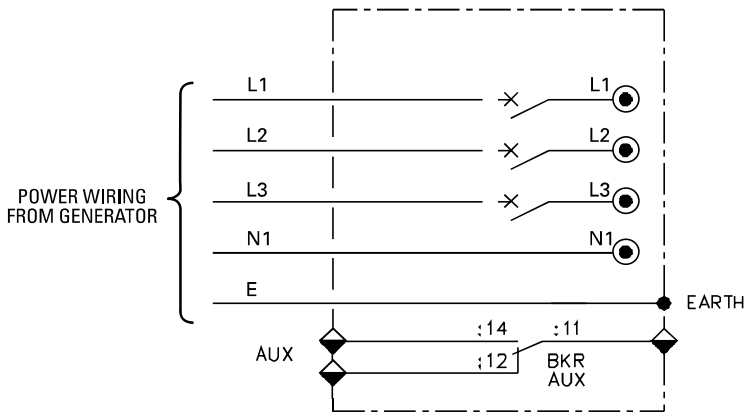

BREAKER BOX TERMINAL
POWER CONNECTION

AUX – AUXILIARY CONTACTS SHT2 – 12/24 V SHUNT TRIP

Option SHT2 adds a DC operated shunt trip which can be used to automatically open the circuit breaker upon activation of a generator set shut down signal from the generator set control panel, or from a remote signal (supplied by others).

Option AUX adds an auxiliary changeover switch which can be used for remote indication of the circuit breaker status.

Market: N. America
LEHE4009 (01-05)

Information contained in this publication may be considered confidential.
Discretion is recommended when distributing.
Materials and specifications are subject to change without notice.

www.cat-ElectricPower.com

© 2005 Caterpillar
All Rights Reserved.
Printed in U.S.A.

125 Amp Load Center



Image shown may not reflect actual package.

SPECIFICATIONS

Line Rated Current	125 A
Number of spaces	8
Number of circuits	16
Number of tandem circuit breakers	8
System Voltage	120/240 V AC
NEMA degree of protection	NEMA 3R outdoor
Electrical connection	Lugs
Wiring configuration	3-wire
Material	Tin plated aluminium busbar
Enclosure material	Galvannealed steel
Cover finish	Gray baked enamel
Product certifications	UL Listed

www.Cat-ElectricPower.com
©2016 Caterpillar
All rights reserved.

Materials and specifications are subject to change without notice.
CAT, CATERPILLAR, their respective logos, “Caterpillar Yellow”,
the “Power Edge” trade dress as well as corporate and product identity used
herein, are trademarks of Caterpillar and may not be used without permission.



Image shown may not reflect actual configuration.

20A Tamper-Resistant, Weather-Resistant GFCI Receptacles

Features and Benefits

- Automatically tests the GFCI every time the reset button is pushed in. The GFCI will not reset if the GFCI circuit is not functioning properly.
- By blocking reset of the GFCI if protection has been compromised, SmartLockPRO reduces the possibility of end-users incorrectly assuming that a reset GFCI outlet is providing ground fault protection when it actually is not.
- A line-load reversal diagnostic feature is provided which prevents the GFCI from being reset and stops power from being fed to the GFCI receptacle face or through to downstream devices. A green LED indicator on the GFCI's face also illuminates to alert the installer to the line-load wiring reversal.

Weather-Resistant GFCIs

- Meet UL 498 requirements for weather-resistant receptacles.

Tamper-Resistant GFCIs

- Shutter mechanism inside the receptacle blocks access to the contacts unless a two-prong plug is inserted, helping ensure foreign objects will be locked out.

Product Features

- Grounding: GFCI ground fault
- Feature: Weather and tamper-resistant
- Amperage: 20 Amp
- Voltage: 125 Volt
- NEMA: 5-20R
- Trip Level: Class A, 5mA plus or minus 1mA
- Pole: 2
- Wire: 3
- Color: White

Standards and Certifications

- NEMA: WD-6
- ANSI: C-73
- UL498: File E13399
- CSA C22.2 No. 42: File LR-57811
- NOM: 057
- UL 943: File E48380

Receptacles contained in a weather resistant box and in-use cover.



www.Cat-ElectricPower.com

©2016 Caterpillar
All rights reserved.

Materials and specifications are subject to change without notice.
CAT, CATERPILLAR, their respective logos, "Caterpillar Yellow", the "Power Edge" trade dress as well as corporate and product identity used herein, are trademarks of Caterpillar and may not be used without permission.



Image shown may not reflect actual package.

LED Lights

Features

AC/DC Lighting Kit

- Capable of AC and DC operation with provided selector switch
- DC operation has a 60-minute timer switch to limit battery drain
- AC operation is enabled by transformer
- Low voltage, low energy circuit and operation
- Installation includes one single LED light.

Technical Data	
Theoretical Lumens Output	1600 lm
Operational Lumens Output	1000 lm
Color Temperature	5700 K
Lens	PC
Body	Aluminum
Weight	0.6 kg
IP Rating	IP68, IP6K9K
EMC	CISPR 25 Class 3, EN 12895, ISO 13766, ISO 14982, ISO 7637-2
Operating Temperatures	-40°C to +85°C (Overheat protected)

www.Cat-ElectricPower.com
©2022 Caterpillar
All rights reserved.

CAT, CATERPILLAR, LET'S DO THE WORK, their respective logos, "Caterpillar Corporate Yellow", the "Power Edge" and Cat "Modern Hex" trade dress as well as corporate and product identity used herein, are trademarks of Caterpillar and may not be used without permission.



Image shown may not reflect actual package.

Pump Style Jacket Water Heater

Single Phase 2500 Watts Pump style jacket water heater is a complete coolant preheater.
It features an integrated pump that combines the benefits of forced circulation with a compact design that can mount to a variety of small engine applications. Forced circulation of the coolant delivers uniform heating throughout the entire engine, extends element life and offers a significant reduction in electrical consumption.

UL Listed , ULc Listed
240V
Installation provided with shut-off valves

www.Cat-ElectricPower.com
©2016 Caterpillar
All rights reserved.
Materials and specifications are subject to change without notice.
CAT, CATERPILLAR, their respective logos, “Caterpillar Yellow”, the “Power Edge” trade dress as well as corporate and product identity used herein, are trademarks of Caterpillar and may not be used without permission.

AIR CLEANERS

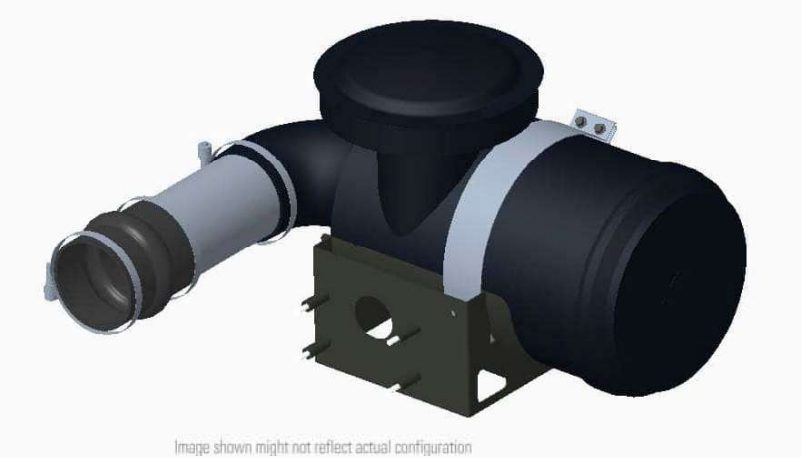

Image shown might not reflect actual configuration

AIR CLEANERS FOR C13/C15/C18 ENGINES

GENERAL DESCRIPTION

Air Cleaner reduce contaminants flowing into the air intake system, provide a high level of Engine protection from harmful contaminants and increase engine performance and fuel efficiency.

Dual element air cleaners provide additional protection for the Engine

FEATURES

- Radial Seal Technology
- Easy to read CAT filter service indicator with manual reset
- Standard Yellow Media
- Constant torque clamps
- Engine rear mounted filters with easy access to service filter to open and enclosed Gensets
- Air filters Designed for 500 hrs of service*
  *based on dust Concentration levels

Feature Code	Engine model	Dust Environment	Industry	Element	Housing
Dust Concentration level - 1-5mg/m3					
STD AIR	C13, C15, C18	Standard Duty	Factory, Office	Non-Canister	N-A
Dust Concentration level - 5-10mg/m3					
ACLSS04	C13, C15	Medium Duty	Construction, Factory	Single Element	Radial Seal, Metal Body
ACLSS05	C18	Medium Duty	Construction, Factory	Single Element	15" Radial Seal, Metal Body
ACLSS05	C18 PD 50 Hz	Medium Duty	Construction, Factory	Single Element	2off PowerCore Glass Filled Polypropylene Housing
ACLSS06	C18 60HZ	Medium Duty	Construction, Factory	Single Element	18" Radial Seal, Metal Body
ACLSS06	C18 PD 60 HZ	Medium Duty	Construction, Factory	Single Element	2off PowerCore Glass Filled Polypropylene Housing



Sample isolator

VIB4 Seismic Vibration Isolators (Zone 4)

For regions where seismic tremors are experienced, this option can be used in place of the standard anti-vibration mounting arrangement. These seismic zone 4 vibration isolators are designed to withstand the high shear forces that can arise under such seismic activity as per the 1994 Uniform Building Code. Isolators are positioned between the engine/generator mounts and the generator set base frame. The vibration isolators are matched to ensure minimal oscillation levels during generator set operation.

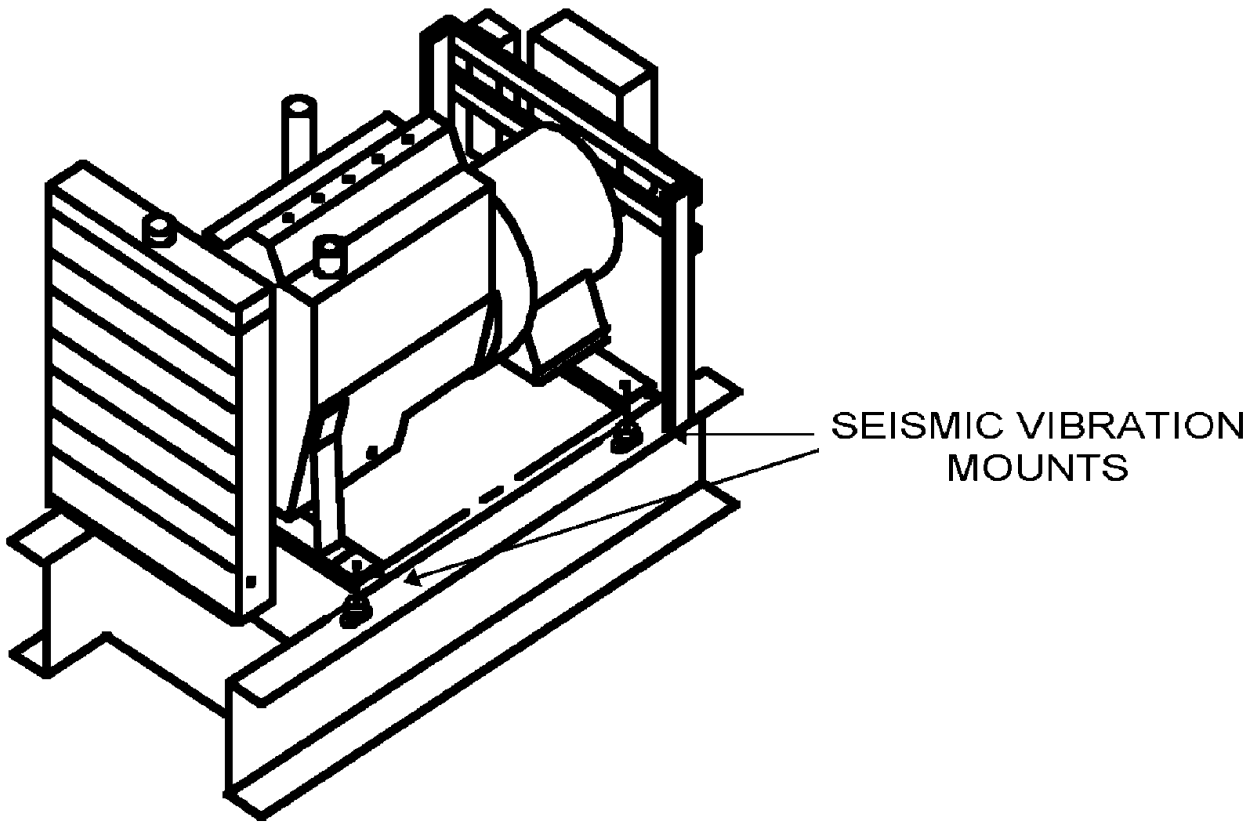

LEHE4004-02

Load vs Deflection

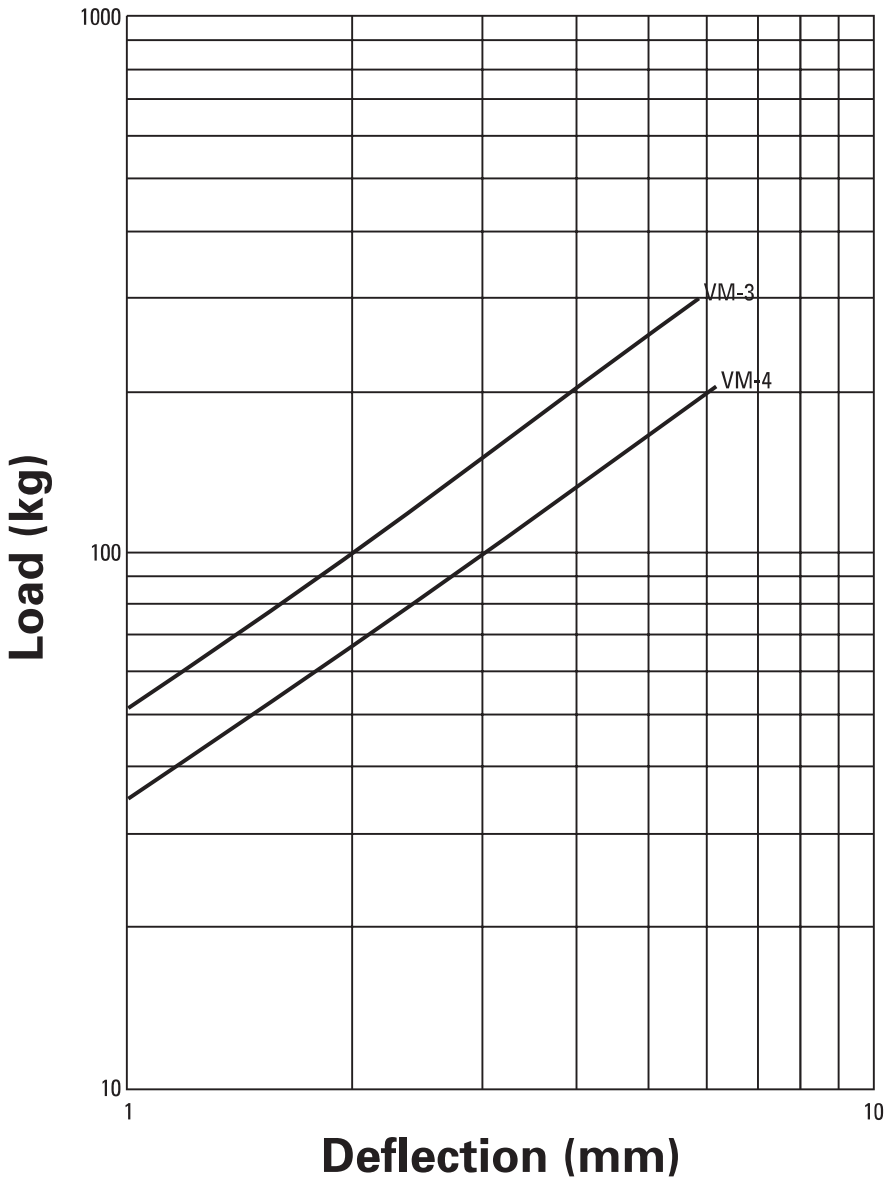

Diesel	
Engine Model	**Vib-Mt**
D25-6 D25-6S D30-8 D30-6S	VM-4
D40-4 D40-4S D50-4 D50-4S D60-4 D60-6S D80-6 D80-2S D100-6 D100-6S D125-6 D150-8 D175-2	VM-3

Information contained in this publication may be considered confidential.
Discretion is recommended when distributing.
Materials and specifications are subject to change without notice.
CAT, CATERPILLAR, their respective logos, “Caterpillar Yellow” and the POWER EDGE trade dress, as well as corporate and product identity used herein, are trademarks of Caterpillar and may not be used without permission.

Market: N. America

LEHE4004-02 (06-07)

www.cat-electricpower.com

© 2007 Caterpillar
All Rights Reserved.
Printed in U.S.A.



Cat® PL444 4G LTE Radio (Model: PL444 NA) Telematics Hardware

Product Description

The Caterpillar PL444 system is a Telematics product that is designed to record and store data from multiple datalinks (CAN J1939, Modbus RS485) present on higher level systems, then transmit the data offboard via wireless communications (cellular) to back office systems for end customer use.

Features

Design Specifications:

- 4G LTE Category 4 Radio
- GNSS signal tracking
- CAN datalink communication
- Modbus datalink communication
- Durable IP66/67-rated enclosure

Radio Connections / Pinout

	A	B	C	D	E	F	G	K	L	M
1	CAN_H	CAN_L	Not used	Not used	Not used	Not used	Not used	Not used	KSW	Batt+
2	Not used	Not used	Not used	Not used	Not used	Not used	Not used	Wireless Disable	Not used	Batt-
3	RS485 RTN	Not used	Not used	Not used	Not used	Not used	LSD1	Not used	Not used	Not used
4	RS485_A	RS485_B	Not used	Not used	Not used	Not used	Not used	Not used	Not used	Not used

CAN_H: CAN High
CAN_L: CAN Low
KSW: Keyswitch (Ignition) – Wakes the device up when tied to Batt+ voltage
Batt+: 12/24V Input
Batt-: Ground/Return
Wireless Disable: When pulled to ground, disables all RF transmissions (Cellular)
LSD1/2: Low Side Drivers 1 and 2. Connects a load with a voltage source, to ground when enabled, completing the circuit
RS485 RTN: RS-485 Shield
RS485A/B: RS-485 Modbus connections

Radio Dimensions

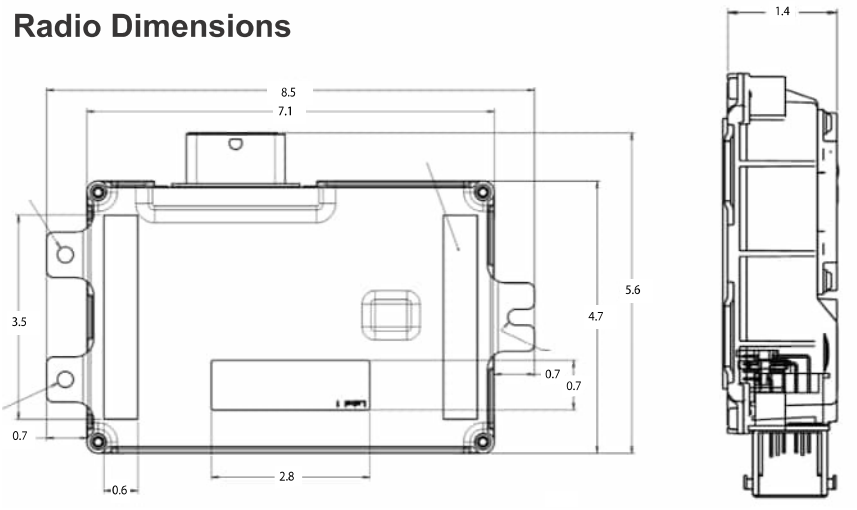

*All dimensions are in inches.

Technical Specifications

Input Voltage
Voltage Range ..... 9 to 32V DC
Protection ..... Reverse polarity

Current Consumption
Idle Current (non-transmitting) ..... < 300 mA
Peak Current ..... < 6A
Sleep Current ..... <3 mA

Physical Specifications
Enclosure Material ..... Plastic (PBT+ASA GF30 FR)
Aluminum (AlMg2.5 / H22; H23)
Dimensions (in) ..... 8.5 x 5.6 x 1.4
Weight ..... 0.45 kg
Interface Connectors ..... 48 pin Molex

Environment
Operating/Storage Temp ..... -40°C to +85°C
Ingress Protection IP66/67
Humidity ..... SAE J1455
Vibration ..... 9.8 Grms random (24-2000 Hz), up to 0.5 g^2/Hz

Regulatory Compliance
FCC, IC, CE RED, EN/UL/CSA 62368-1, RoHS, WEEE, REACH

LEDs
Orange — GNSS (Solid: GNSS Fix, 1Hz: Searching/no lock, Off: Fault)
Blue — Datalink (Flashing: Activity on J1939 or Modbus Off: Fault or No Connection)
Yellow — Cellular (Solid: Data connection established, Flashing: Searching for signal, Off: Modem off or Fault)
White — Bluetooth® (Solid: Connection established, Flashing: Advertising mode, Off: Bluetooth off or Fault)

Secure Key Injection
Security ..... Unique and cryptographic identity

Communications
Datalink J1939/CAN
Datalink ..... Modbus (RS-485)
Wireless ..... 4G LTE with 2G/3G fallback
Wireless ..... Bluetooth®/BLE 5.0

I/O
Low Side Drivers (300 mA max) 2
Switch to Ground 1
Keyswitch 1

Positioning (GNSS)
Signal Tracking ..... GPS/Galileo/GLONASS/BeiDou
Antenna ..... Internal

Cellular Communications

LTE Bands/Frequencies

Band	Frequencies (Uplink / Downlink) (MHz)
2	1850-1910 / 1930-1990
4	1710-1755 / 2110-2155
5	824-849 / 869-894
7	2500-2570 / 2620-2690
12/17	699-716 / 729-746
13	777-787 / 746-756

3G (UMTS) Bands/Frequencies

Band	Frequencies (Uplink / Downlink) (MHz)
2	1850-1910 / 1930-1990
4	1710-1755 / 2110-2155
5	824-849 / 869-894

2G (GSM) Bands/Frequencies

Band	Frequencies (Uplink / Downlink) (MHz)
2	1850-1910 / 1930-1990
5	824-849 / 869-894

Antennas ..... 2x internal (Primary + Diversity) to support 2x2 MIMO
SIM ..... eUICC chip
Operating Temperature ..... -30°C to +70°C

Bluetooth® Communications
Frequencies ..... 2402 – 2480 MHz
Version ..... BLE 5.0
Antenna ..... internal

LET'S DO THE WORK.™

www.cat.com/electricpower
©2021 Caterpillar
All rights reserved.
Materials and specifications are subject to change without notice.
The International System of Units (SI) is used in this publication.
CAT, CATERPILLAR, LET'S DO THE WORK, their respective logos, "Caterpillar Corporate Yellow" the "Power Edge" and Cat "Modern Hex" trade dress as well as corporate and product identity used herein, are trademarks of Caterpillar and may not be used without permission.

Battery Charger

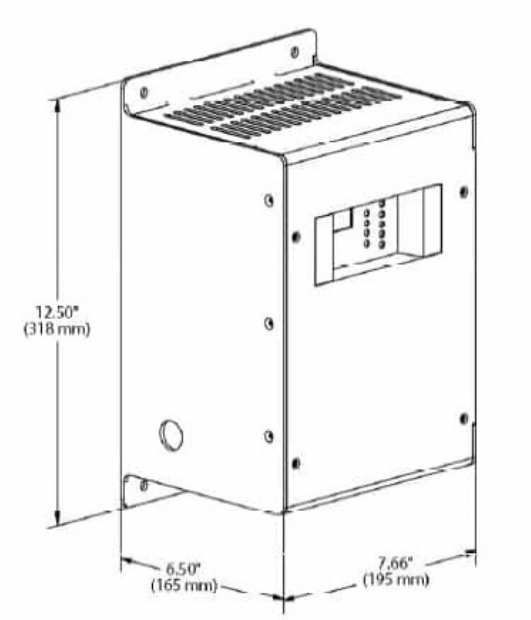

Image Shown may not Reflect Actual Package.

UL 10 Amp

Battery Charger

This battery charger offers accurate, automatic charging of lead-acid and nickel cadmium batteries. The output voltage automatically adjusts to changing input, load, battery and ambient conditions. This prevents battery over-charging and consequent loss of battery electrolyte.

Standard features include AC line compensation, precision voltage regulation, current limiting, automatic 2-rate charging, voltmeter and ammeter, temperature compensation and UL Listing.

The user interface is easy to understand with digital metering, NFPA 110 alarms and a battery fault alarm.

Features

- Electronically current limited at 105% of rated output
- Alarm system
- Digital display
- Lightning and voltage transient protection
- Protection of connected equipment against load dump protection
- Constant voltage, current limited, 4-rate automatic equalization
- IP 20 housing
- Temperature compensation
- On board temperature sensor with remote port
- Auto AC line compensation
- Output regulated by sensed battery voltage

Standards

- C-UL listed to UL 1236
- NFPA 70, NFPA 110
- CSA 22.2 No 107 certified
- CE DOC to EN 60335
- IBC Seismic Certification

Battery Charger

Specifications

Input supply	110 – 120 V 208 – 240 V
AC and DC fuses	2 input and 2 output)
Output voltage	24V
Output amps	10
Frequency	50 / 60 Hz
Operating temperature	-20°C (-4°F) to +60°C (140°F)
Housing constructed of rustproof anodized Aluminum	

Dimensions			
Width	Depth	Height	Weight
195 mm (7.66 in)	165 mm (6.5 in)	318 mm (12.5 in)	10.4 kg (23 lb)

NFPA 110 alarm package as follows:

- AC on Green led (indication)
- AC fail Red led and form C contact (2A)
- Float mode LED
- Fast charge LED
- Temp comp active LED
- Low battery volts Red led and Form C conta
- High Battery Volts Red led and Form C conta
- Charger fail Red led and Form C conta
- Battery fault Red led and Form C conta
- Battery disconnected
- Battery polarity reversed
- Mismatched charger battery voltage
- Open or high resistance charger to battery connection
- Open battery cell or excessive internal resistance

Feature Codes:

BTC1024 BTC1028 BTC1035 BTC1025 BTC1032

Information contained in this publication may be considered confidential. Discretion is recommended when distributing.
Materials and specifications are subject to change without notice.

CAT, CATERPILLAR, LET'S DO THE WORK, their respective logos, "Caterpillar Yellow," the "Power Edge" and Cat "Modern Hex" trade dress as well as corporate and product identity used herein, are trademarks of Caterpillar and may not be used without permission.

©2019 Caterpillar
All rights reserved.

Cat® Batteries



Cat Batteries – Greater Starting Power – Lower Maintenance – Longer Life

Cat Premium High Output (PHO) batteries are used in all Caterpillar Machines and Engine Gen-Sets. They are designed to meet stringent Caterpillar design specifications, which provide industry leading cold cranking amp (CCA) capability and maximum vibration resistance.

Maintenance Free or low maintenance designs are available in wet and dry configurations.

General Service Line batteries are available in Maintenance Free or low maintenance designs and in wet or dry configurations. Wide selections of BCI group sizes are available for automotive, light truck, bus, industrial, agricultural, marine, recreational and valve regulated (VRLA-AGM & Gel) applications.

Caterpillar. The difference counts.™

Cat Dealers define world – class product support. We offer you the right parts and service solutions, when and where you need them.

The Cat Dealer network of highly trained experts keeps your entire fleet up and running to maximize your equipment investments.

CATERPILLAR®

World's Toughest Batteries



Premium High Output – Maximum Vibration Resistance

- Vibration Resistance...five times the Industry Standard
- Exclusive "flat top" BCI group 4D & 8D batteries are Maintenance Free and have the industries highest cold cranking amps (CCA)
- Popular BCI group 31 Maintenance Free batteries with industry leading cold cranking amps...up to 1000 (CCA), for electric power, machine or on-highway truck and bus applications. Deep cycle models available for truck, marine or recreational usage

Specifications for Cat Premium High Output Batteries – Available Worldwide

									BCI Overall Dimensions			Nominal Weight	
BCI Group Size	Part No.	Cold Cranking Amps"	Reserve Capacity Minutes'	Volts	Amp Hr. Capacity @ 20 Hrs.	Construction	Add Water Maintenance Check Hours	Length In (mm)	Width In (mm)	Height In (mm)	Wet Lb (kg)	Dry Lb (kg)	Nominal Acid to Fill Qt (liter)
8D	153-5720	1500	465	12	210	C	MF	20.47 (520)	10.8 (275)	9.76 (248)	132 (60)	–	–
8D	101-4000	1400	400	12	190	LAC+	1000	20.7 (526.5)	10.96 (278)	9.76 (248)	132 (60)	86 (39)	18.0 (17.0)
4D	153-5710	1400	425	12	200	C	MF	20.47 (520)	8.58 (218)	9.76 (248)	119 (54)	–	–
4D	153-5700	1125	305	12	145	C	MF	20.47 (520)	8.58 (218)	9.76 (248)	101 (46)	–	–
4D	9X-9730	1300	400	12	190	LAC+	1000	20.75 (527)	8.58 (218)	9.76 (248)	119 (54)	81 (37)	14.8 (14.0)
4D	9X-9720	1000	275	12	140	LAC+	1000	20.75 (527)	8.58 (218)	9.76 (248)	101 (46)	59 (27)	15.9 (15.0)
31	175-4390	1000	180	12	90	C/S	MFA	12.9 (328.4)	6.74 (171.2)	9.29 (236)	60 (27)	–	–
31	175-4370	825	190	12	100	C/S**	MFA	12.9 (328.4)	6.74 (171.2)	9.29 (236)	60 (27)	–	–
31	175-4360	710	185	12	100	C/S***	MFA	12.9 (328.4)	6.74 (171.2)	9.29 (236)	60 (27)	–	–
31	**250-0480**	710	185	12	100	C/SDT***	MF	12.9 (328.4)	6.74 (171.2)	9.29 (236)	60 (27)	–	–
(2) 31	115-2422	1000	170	12	90	C SAE	MFA	12.9 (328.4)	6.74 (171.2)	9.46 (240.3)	60 (27)	–	–
31	115-2421	950	170	12	90	C SAE +	MFA	12.9 (328.4)	6.74 (171.2)	9.46 (240.3)	60 (27)	44 (20)	6.6 (6.2)
31	9X-3404	950	165	12	100	C SAE	MF	13 (330.2)	6.77 (172)	9.46 (240.3)	58 (26)	–	–
31	3T-5760	750	165	12	100	C SAE	MF	13 (330.2)	6.77 (172)	9.46 (240.3)	55 (25)	–	–
24	153-5656	650	110	12	52	SC	MF	10.98 (278.9)	6.85 (174)	9.0 (229.1)	39 (18)	–	–
65	230-6368	880	140	12	80	SC	MF	11.9 (303.4)	7.5 (190.8)	7.5 (191.4)	45.5 (21)	–	–
74	153-5660	650	110	12	52	SC*	MF	10.98 (278.9)	7.0 (178.2)	8.15 (206.9)	39 (18)	–	–
58	175-4280	500	70	12	35	SC	MF	9.96 (253.1)	7.2 (182.5)	6.9 (176)	31 (14)	–	–
2	153-5690	765	210	6	90	LAC+	1000	10.24 (260)	6.8 (173)	8.72 (221.6)	37 (17)	22 (10)	4.8 (4.5)

Construction Notes:
LAC = Low Maintenance, Hybrid Construction
C = Calcium Lead Alloy Grid Design
MF = Maintenance Free
MFA = Maintenance Free with Accessible Vent Caps
S = Stud Terminals
+ = Shipped Dry Only
* = Side Terminals
** = Starting and Deep Cycle Battery
*** = Deep Cycle and Starting Battery
" = For 30 seconds at 0° F (-18° C)
' = Minimum of 25 amp output at 80° F (27° C)
SAE = Uses SAE Posts
SDT = Dual, Top mounted Terminals, Stud and SAE Post, Marine Deep Cycle/Starting Battery
SC = Silver (Ag) Calcium Alloy Grids for resistance to high underhood temperatures

Rugged Design – Built Tough – Reliable Starting

- Positive and Negative plates are anchored to container bottom and locked at the top of cell element for maximum vibration resistance.
- Heavy-duty forged terminal post bushings provide maximum strength and resistance to acid seepage.
- Hefty full-frame grids, no sharp edges, optimum acid/paste combination provides better charge acceptance after deep discharge.
- Manifold vented cover with built-in Flame Arrestor…a safety feature that directs corrosive gases away from the battery and hold-downs.
- Thick, robust container resists rugged treatment typical of heavy-duty commercial use. Embossed part number & descriptors for easy serviceability.

Cat Batteries

Heavy-duty Forged Terminal Post Bushings

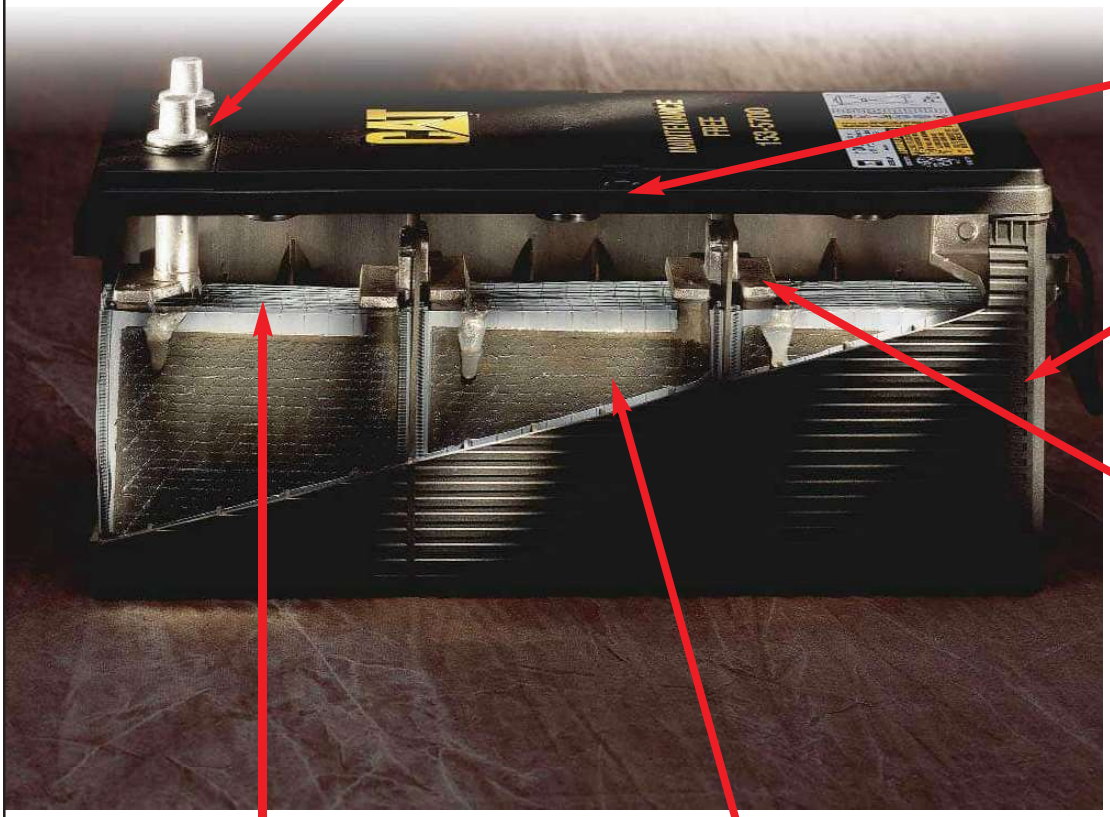

Robust Components = Long Life + Reliable Starts

- Heavy-duty forged terminal post bushings provide maximum strength and resistance to acid seepage that causes corrosion and black posts. Thicker internal terminal posts provide lower electrical resistance and higher cold cranking amp output.
- Rugged microporous polyethylene envelope separators protect against “shorts” and vibration damage. Deep Cycle batteries utilize double insulated Glass mat separators for longer cycling life.
- Maintenance Free batteries utilize calcium lead alloy on both positive and negative plates that reduces gassing and water consumption. Automotive batteries have Silver (Ag) Calcium Alloy Grids for resistance to high underhood temperatures.
- Heavy-duty, full frame battery grids with no sharp edges. An optimum acid/paste combination provides better charge acceptance after a deep discharge.
- Positive and Negative plates are anchored to the container bottom and the cell element is locked at the top for maximum vibration resistance. Straps are thicker, heavier and cast (not welded) into the plates.
- Manifold vented cover with built-in Flame Arrestor…a safety feature that directs corrosive gases away from the battery and hold-downs.
- Robust reinforced case provides extra strength in all temperature extremes. Brickwork design on sides reduces chance of punctures and case flexing. Embossed part number and descriptors for easy serviceability.

CAT, CATERPILLAR, their respective logos and “Caterpillar Yellow,” as well as corporate and product identity used herein, are trademarks of Caterpillar and may not be used without permission.

For more information, see us today or visit our web site at www.cat.com

Caterpillar. The difference counts.™

CATERPILLAR®

PEHJ0073-01 Printed in the U.S.A.
© 2005 Caterpillar All Rights Reserved

Cat® DEO™

Diesel Engine Oil for North America (Canada, Mexico, United States).

SAE 15W-40, SAE 10W-30



Recommended Use

- Cat earthmoving, commercial, marine* and on-highway truck diesel engines
- Low-emission diesel engines including Cat engines with ACERT® Technology
- Heavy-duty diesel engines made by other manufacturers that recommend API CI-4 PLUS, CH-4 or CG-4 category oil (See "Typical Characteristics" on page 2 for more information)
- Automotive gasoline engines that require API SL category oils

* Excluding 3600, C280, 3126 and 3116 MUI Marine and MaK diesel engines. The 3116 and 3126 MUI Marine diesel engines with closed crankcase ventilation systems should use Cat SAEO™.

Discover the Difference

Cat DEO is developed, tested and approved by Caterpillar to meet the same high standards as all Genuine Cat Parts.

Factory-Fill—Used as standard factory-fill for Cat machines.

Increased Engine Life—Resists oxidation and prevents build-up of deposits on pistons and rings.

Longer Intervals—Extends oil drain intervals while providing excellent engine protection and performance when used in conjunction with our S•O•S℠ Services oil analysis program.

Proven Performance—Tested thoroughly in Cat diesel engines including Cat engines with ACERT Technology to ensure excellent engine life and performance.

Long-Lasting Protection—Improved soot control and enhanced shear stability enable oil to maintain proper viscosity for longer operating periods in Cat engines with ACERT Technology, especially those equipped with HEUI systems.

Caterpillar. The difference counts.™

Cat Dealers define world-class product support. We offer you the right parts and service solutions, when and where you need them.

The Cat Dealer network of highly trained experts keeps your entire fleet up and running to maximize your equipment investment.

CATERPILLAR®

Cat DEO

Cat DEO Performance

Performance Requirements	Test	Commercial ECF-1	Cat DEO
Cat 3406E Endurance Test	Cat Proprietary		
Cat C13 ACERT Endurance Test	Cat Proprietary		
Cat 3500 Series Test	Cat Proprietary		
Cat C13 ACERT Wheel Loader Test	Cat Proprietary		
Improved Soot-Viscosity & Shear Control			
High Temperature Shear			
Elastomer Compatibility			
Piston ring & Cylinder liner wear			
Valve train wear, sludge, oil filter plugging			
Aeration Control			
Bearing Corrosion			
Cam roller follower pin wear			
Copper, lead and tin erosion			
Foaming Control			
Viscosity Shear loss			
Viscosity Increase from soot			
Oxidation			
Piston deposits and oil control			

Tested Beyond Industry Standards

In addition to the tests required for the ECF-1 classification, Cat DEO undergoes four proprietary multi-cylinder endurance tests, a variety of quality assurance tests and thousands of hours of field service. Only when it has passed all these tests can it be approved by Caterpillar. The chart to the left indicates the differences between ECF-1 standards and the proprietary standards of Caterpillar.

Typical Characteristics*

SAE Viscosity Grade	15W-40	10W-30
API Service Classification		
Diesel	CI-4 PLUS, CI-4, CH-4, CG-4,CF-4/CF	CI-4, CH-4, CG-4, CF-4/CF
Gasoline	SL	SL
OEM Performance Level:		
Caterpillar	ECF-1	ECF-1
Volvo	VDS-3	VDS-2
DDC	93K214	
Cummins	CES 20071/76/78	CES 20071/76
Mack	EO-NPP '03, EO-M Plus	EO-M Plus
Flash Point, °C (ASTM D92)	224	227
Pour Point, °C (ASTM D97)	-30	-33
Viscosity		
cSt @ 40°C (ASTM D445)	120.5	76
cSt @ 100°C (ASTM D445)	15.5	11.5
Viscosity Index (ASTM D2270)	135	145
Sulfated Ash, % wt. (ASTM D874)	1.3	1.3
TBN (ASTM D2896)	11.3	11.3
Zinc, % wt. (ASTM D4951)	0.146	0.146
Gravity @ 16°C		
API (ASTM D287)	29.3	31.8
Specific	0.880	0.867

*The values shown are typical values and should not be used as quality control parameters to either accept or reject product. Specifications are subject to change without notice.

Other Recommended Oils

Cat DEO SYN™ 5W-40

For engines that must be started in extremely low temperatures down to -30°C(-22°F) consider using Cat DEO SYN 5W-40. This is a full synthetic diesel engine oil.

S•O•S Services for early problem detection

Protect your investment with Cat S•O•S oil analysis, the ultimate detection and diagnostic tool for your equipment. S•O•S helps you detect potential problems before they can lead to major failures and costly, unscheduled downtime.

Cat Filters: Complete protection for your machine

Combine Cat Fluids with Cat Filters for the highest level of contamination control and protection for your machine. We recommend Cat Filters for all Cat machine applications.

Health and Safety

Under normal conditions of intended use, this product does not pose a risk to health. Excessive exposure may result in eye, skin or respiratory irritation. Always observe good hygiene measures. Read and understand the Material Safety Data Sheet (MSDS) before using this product. For a copy of the MSDS, visit us on the web at www.catmsds.com.

PEHJ0059-02 www.cat.com © 2006 Caterpillar All Rights Reserved Printed in USA

CATERPILLAR®

Cat® ELC

Extended Life Coolant for Caterpillar and original equipment manufacturer (OEM) diesel and gasoline engines

50/50 Premix



Recommended Use

Cat ELC meets or exceeds the requirements of the following specifications and guidelines:

- Cat EC-1
- TMC RP-329
- TMC RP-338
- ASTM D-3306
- ASTM D-6210
- SAE J1034

Cat ELC also meets the performance requirements of Cummins, Detroit Diesel, International, Mack and Volvo.

Discover the Difference

Cat ELC is developed, tested and approved by Caterpillar to meet the same high standards as all Genuine Cat Parts.

- Factory-Fill—Used as standard factory-fill for all Cat machine cooling systems.
- Lower Maintenance Costs—Reduces engine coolant and additive costs by as much as 500% compared to conventional coolants. It eliminates the need for supplemental coolant additives, extends coolant change-out intervals and reduces disposal requirements.
- Advanced Metal Protection—Incorporates an advanced formula technology with organic acid additive corrosion inhibitors, such as a combination of mono and dicarboxylates for maximum protection of copper, solder, brass, steel, cast iron and aluminum.

CATERPILLAR®

Cat ELC for Maximum Coolant Life

Cat DEAC™

3000 Hour Life or
333,000 km (200,000 miles)
Cat Supplemental Coolant Additives Every 250 Hours
or 25,000 km (15,000 miles)

Cat ELC (Machines and Commercial Engines)

Cat Extender Every 6000 Hours*

12,000 Hour Life or 6 Years**
(whichever comes first)

Cat ELC (Truck Engines)

Cat Extender Every 500,000 km (300,000 miles)* **1,000,000 km (600,000 miles) or 6 Years****
(whichever comes first)

* Or one-half of the coolant service life.

** These coolant change intervals are only possible with annual S•O•S Level 2 coolant sampling and analysis.

Typical Characteristics*

Color	Strawberry Red
Boiling protection with 15 psi (1 bar) radiator cap	
50% Cat ELC/50% water	129°C (265°F)
60% Cat ELC/40% water (ELC concentrate added)	132°C (270°F)
Freezing protection	
50% Cat ELC/50% water	-37°C (-34°F)
60% Cat ELC/40% water (ELC concentrate added)	-52°C (-62°F)
Nitrite (50% solution)	500 ppm
Molybdate (50% solution)	530 ppm

*The values shown are typical values and should not be used as quality control parameters to either accept or reject product. Specifications are subject to change without notice.

S•O•S℠ services for early problem detection

Protect your investment with Cat S•O•S Coolant Analysis, the ultimate detection and diagnostic tool for your equipment. We recommend S•O•S Level 1 Coolant Analysis according to the engine's Operation and Maintenance Manual, and Level 2 Coolant Analysis annually for all your Cat equipment.

Cat ELC Extender for Longer Life

- Exceeds Cat EC-1 performance requirements
- Protects against cylinder liner/block pitting and cavitation erosion
- Should be added at 500,000 km (300,000 miles) for Cat powered on-highway trucks and 6,000 hours for commercial engines
- Extender is only necessary once during the life of the coolant
- Ensures Cat ELC performance to 1,000,000 km (600,000 miles) or 12,000 hours

Cat ELC Extender and Flush Intervals

Cat ELC Extender should be added after 6,000 hours or 300,000 miles (500,000 km) of operation, and the system should be drained and flushed with clean water after 12,000 hours or 600,000 miles (1,000,000 km). No cleaning agents are needed. If S•O•S℠ Services are used regularly, safe operation with Cat ELC may extend beyond 12,000 hours.

Health and Safety

Under normal conditions of intended use, this product does not pose a risk to health. Excessive exposure may result in eye, skin or respiratory irritation. Always observe good hygiene measures. Read and understand the Material Safety Data Sheet (MSDS) before using this product. For a copy of the MSDS, visit us on the web at www.catmsds.com.

CAT® DEALERS DEFINE WORLD-CLASS PRODUCT SUPPORT.

We offer you the right parts and service solutions, when and where you need them.

The Cat Dealer network of highly trained experts can help you maximize your equipment investment.



PEHJ0067-02
www.cat.com

© 2007 Caterpillar • All Rights Reserved • Printed in USA
CAT, CATERPILLAR, their respective logos, "Caterpillar Yellow" and the POWER EDGE trade dress, as well as corporate and product identity used herein, are trademarks of Caterpillar and may not be used without permission.

CATERPILLAR®
TODAY'S WORK. TOMORROW'S WORLD.™

GENERATOR DATA

NOVEMBER 01, 2024

For Help Desk Phone Numbers Click here

Selected Model

Engine: C15	**Generator Frame:** LC6134F	**Genset Rating (kW):** 400.0	**Line Voltage:** 480
Fuel: Diesel	**Generator Arrangement:** 4183867	**Genset Rating (kVA):** 500.0	**Phase Voltage:** 277
Frequency: 60	**Excitation Type:** Permanent Magnet	**Pwr. Factor:** 0.8	**Rated Current:** 601.4
Duty: STANDBY	**Connection:** SERIES STAR	**Application:** EPG	**Status:** Current

Version: 41205 /40476 /41431 /8510

Spec Information

Generator Specification

Frame: LC6134F **Type:** LC	**No. of Bearings:** 1
Winding Type: RANDOM WOUND	**Flywheel:** 14.0
Connection: SERIES STAR	**Housing:** 1
Phases: 3	**No. of Leads:** 12
Poles: 4	**Wires per Lead:** 2
Sync Speed: 1800	**Generator Pitch:** 0.6667

Generator Efficiency

Per Unit Load	kW	Efficiency %
0.25	100.0	90.6
0.5	200.0	93.7
0.75	300.0	94.6
1.0	400.0	94.7

Reactances	Per Unit	Ohms
SUBTRANSIENT - DIRECT AXIS X''_d	0.0922	0.0425
SUBTRANSIENT - QUADRATURE AXIS X''_q	0.1226	0.0565
TRANSIENT - SATURATED X'_d	0.1324	0.0610
SYNCHRONOUS - DIRECT AXIS X_d	2.5571	1.1783
SYNCHRONOUS - QUADRATURE AXIS X_q	1.5339	0.7068
NEGATIVE SEQUENCE X_2	0.1070	0.0493
ZERO SEQUENCE X_0	0.0080	0.0037

Time Constants	Seconds
OPEN CIRCUIT TRANSIENT - DIRECT AXIS T'_{d0}	1.9300
SHORT CIRCUIT TRANSIENT - DIRECT AXIS T'_d	0.1000
OPEN CIRCUIT SUBSTRANSIENT - DIRECT AXIS T''_{d0}	0.0130
SHORT CIRCUIT SUBSTRANSIENT - DIRECT AXIS T''_d	0.0100
OPEN CIRCUIT SUBSTRANSIENT - QUADRATURE AXIS T''_{q0}	0.1250
SHORT CIRCUIT SUBSTRANSIENT - QUADRATURE AXIS T''_q	0.0100
EXCITER TIME CONSTANT T_e	0.0300
ARMATURE SHORT CIRCUIT T_a	0.0150

Short Circuit Ratio: 0.49	Stator Resistance = 0.0091 Ohms	Field Resistance = 0.9837 Ohms

Voltage Regulation

Voltage level adjustment: +/-	5.0%
Voltage regulation, steady state: +/-	0.5%
Voltage regulation with 3% speed change: +/-	0.5%
Waveform deviation line - line, no load: less than	2.0%
Telephone influence factor: less than	50

Generator Excitation

	No Load	Full Load, (rated) pf	
		Series	Parallel
Excitation voltage:	10.2 Volts	38.32 Volts	Volts
Excitation current	1.0 Amps	3.09 Amps	Amps

Selected Model

Engine: C15	**Generator Frame:** LC6134F	**Genset Rating (kW):** 400.0	**Line Voltage:** 480
Fuel: Diesel	**Generator Arrangement:** 4183867	**Genset Rating (kVA):** 500.0	**Phase Voltage:** 277
Frequency: 60	**Excitation Type:** Permanent Magnet	**Pwr. Factor:** 0.8	**Rated Current:** 601.4
Duty: STANDBY	**Connection:** SERIES STAR	**Application:** EPG	**Status:** Current

Version: 41205 /40476 /41431 /8510

Generator Mechanical Information

Center of Gravity

Dimension X	-505.0 mm	-19.9 IN.
Dimension Y	0.0 mm	0.0 IN.
Dimension Z	0.0 mm	0.0 IN.

- "X" is measured from driven end of generator and parallel to rotor. Towards engine fan is positive. See General Information for details
- "Y" is measured vertically from rotor center line. Up is positive.
- "Z" is measured to left and right of rotor center line. To the right is positive.

Generator WT = 1260 kg	* Rotor WT = 495 kg	* Stator WT = 765 kg
2,778 LB	1,091 LB	1,687 LB

Rotor Balance = 0.0508 mm deflection PTP

Overspeed Capacity = 125% of synchronous speed

Generator Torsional Data

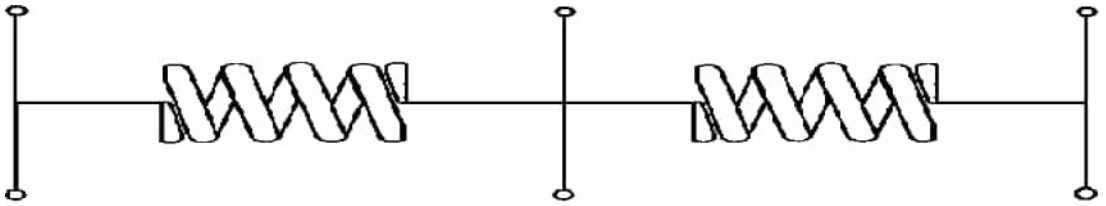

J1 = Coupling and Fan | **J2 = Rotor** | **J3 = Exciter End**

TOTAL J = J1 + J2 + J3

K1 = Shaft Stiffness between J1 + J2 (Diameter 1)

K2 = Shaft Stiffness between J2 + J3 (Diameter 2)

J1	K1	Min Shaft Dia 1	J2	K2	Min Shaft Dia 2	J3
17.1 LB IN. s^2	48.9 MLB IN./rad	4.5 IN.	49.6 LB IN. s^2	36.3 MLB IN./rad	4.3 IN.	1.5 LB IN. s^2
1.93 N m s^2	5.53 MN m/rad	115.0 mm	5.6 N m s^2	4.1 MN m/rad	110.0 mm	0.17 N m s^2

Total J

68.2 LB IN. s^2

7.7 N m s^2

Selected Model

Engine: C15	**Generator Frame:** LC6134F	**Genset Rating (kW):** 400.0	**Line Voltage:** 480
Fuel: Diesel	**Generator Arrangement:** 4183867	**Genset Rating (kVA):** 500.0	**Phase Voltage:** 277
Frequency: 60	**Excitation Type:** Permanent Magnet	**Pwr. Factor:** 0.8	**Rated Current:** 601.4
Duty: STANDBY	**Connection:** SERIES STAR	**Application:** EPG	**Status:** Current

Version: 41205 /40476 /41431 /8510

Generator Cooling Requirements - Temperature - Insulation Data

Cooling Requirements:		**Temperature Data: (Ambient 40 ^{0}C)**	
Heat Dissipated:	22.4 kW	**Stator Rise:**	105.0 ^{0}C
Air Flow:	66.0 m^3/min	**Rotor Rise:**	105.0 ^{0}C

Insulation Class: H

Insulation Reg. as shipped: 100.0 MΩ minimum at 40 ^{0}C

Thermal Limits of Generator

Frequency:	60 Hz
Line to Line Voltage:	480 Volts
B BR 80/40	512.0 kVA
F BR -105/40	582.0 kVA
H BR - 125/40	640.0 kVA
F PR - 130/40	640.0 kVA
H PR - 150/40	678.0 kVA
H PR27 - 163/27	704.0 kVA

Selected Model

Engine: C15	**Generator Frame:** LC6134F	**Genset Rating (kW):** 400.0	**Line Voltage:** 480
Fuel: Diesel	**Generator Arrangement:** 4183867	**Genset Rating (kVA):** 500.0	**Phase Voltage:** 277
Frequency: 60	**Excitation Type:** Permanent Magnet	**Pwr. Factor:** 0.8	**Rated Current:** 601.4
Duty: STANDBY	**Connection:** SERIES STAR	**Application:** EPG	**Status:** Current

Version: 41205 /40476 /41431 /8510

Starting Capability & Current Decrement
Motor Starting Capability (0.6 pf)

SKVA	Percent Volt Dip
102	2.5
210	5.0
324	7.5
444	10.0
571	12.5
705	15.0
847	17.5
999	20.0
1,160	22.5
1,332	25.0
1,515	27.5
1,712	30.0
1,923	32.5
2,151	35.0
2,397	37.5
2,663	40.0

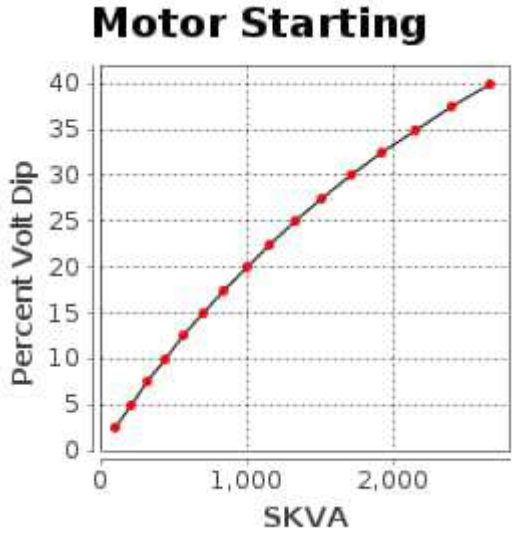

Current Decrement Data

E Time Cycle	AMP
0.0	6,484
1.0	4,267
2.0	3,412
3.0	2,888
4.0	2,481
5.0	2,144
7.5	1,906
10.0	2,165
12.5	2,365
15.0	2,510
20.0	2,487
25.0	2,357
30.0	2,293
35.0	2,276
40.0	2,278
45.0	2,286

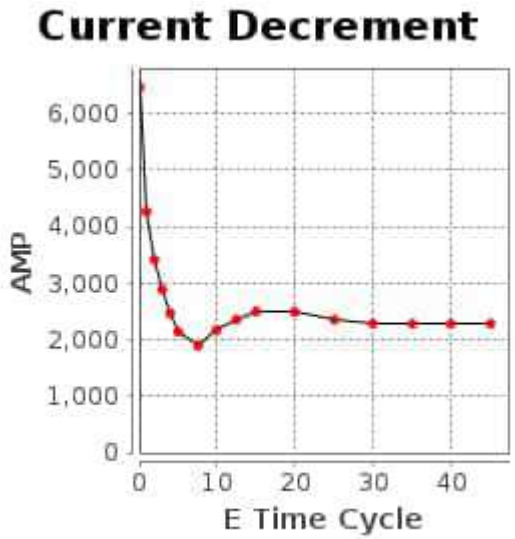

Instantaneous 3 Phase Fault Current: 6484 Amps **Instantaneous Line - Line Fault Current:** 5197 Amps

Instantaneous Line - Neutral Fault Current: 8651 Amps

Selected Model

Engine: C15	**Generator Frame:** LC6134F	**Genset Rating (kW):** 400.0	**Line Voltage:** 480
Fuel: Diesel	**Generator Arrangement:** 4183867	**Genset Rating (kVA):** 500.0	**Phase Voltage:** 277
Frequency: 60	**Excitation Type:** Permanent Magnet	**Pwr. Factor:** 0.8	**Rated Current:** 601.4
Duty: STANDBY	**Connection:** SERIES STAR	**Application:** EPG	**Status:** Current

Version: 41205 /40476 /41431 /8510

Generator Output Characteristic Curves
Open Circuit Curve

Field Current	Line - Line Volt
0.0	0
9.4	288
11.1	336
13.0	384
15.5	432
19.6	480
27.3	528
44.2	576
84.2	624
181.6	672

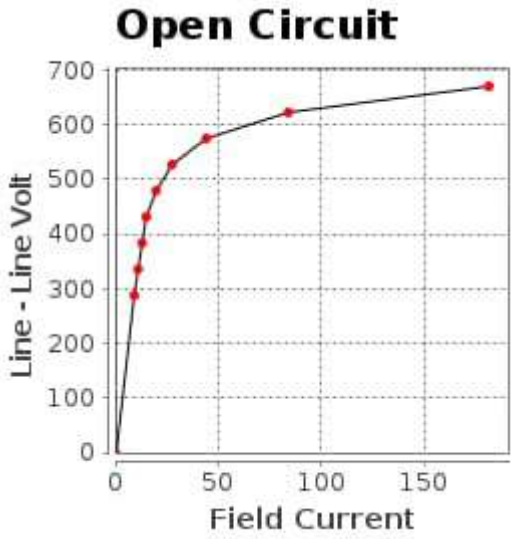

Short Circuit Curve

Field Current	Armature Current
0.0	0
23.6	361
27.6	421
31.5	481
35.5	541
39.4	601
43.4	662
47.3	722
51.2	782
55.2	842

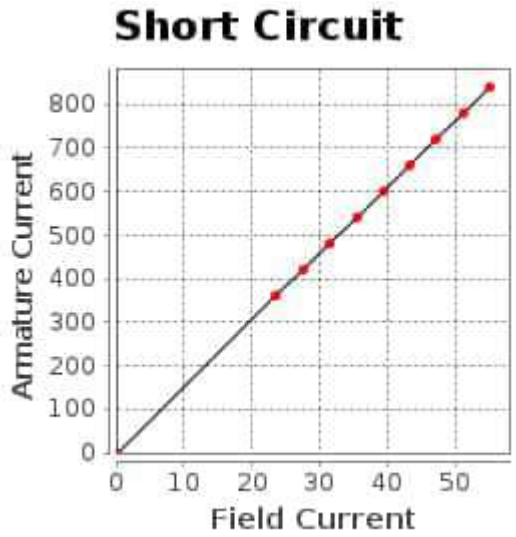

Selected Model

Engine: C15	**Generator Frame:** LC6134F	**Genset Rating (kW):** 400.0	**Line Voltage:** 480
Fuel: Diesel	**Generator Arrangement:** 4183867	**Genset Rating (kVA):** 500.0	**Phase Voltage:** 277
Frequency: 60	**Excitation Type:** Permanent Magnet	**Pwr. Factor:** 0.8	**Rated Current:** 601.4
Duty: STANDBY	**Connection:** SERIES STAR	**Application:** EPG	**Status:** Current

Version: 41205 /40476 /41431 /8510

Generator Output Characteristic Curves
Zero Power Factor Curve

Field Current	Line - Line Volt
39.4	0
48.5	240
50.2	288
52.1	336
54.5	384
58.3	432
65.4	480
80.7	528
116.7	576
204.2	624

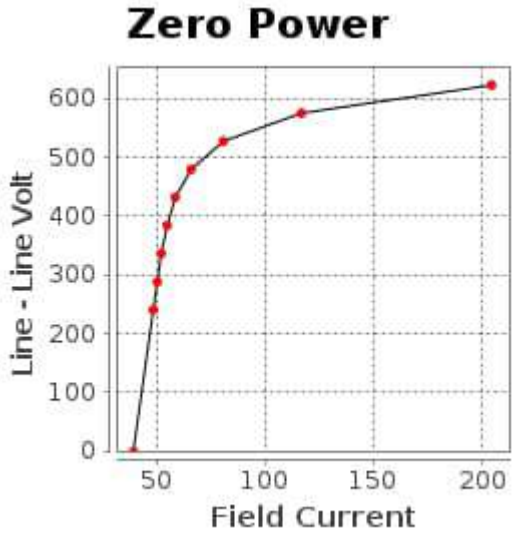

Air Gap Curve

Field Current	Line - Line Volt
0.0	0
9.3	288
10.8	336
12.3	384
13.9	432
15.4	480
17.0	528
18.5	576
20.1	624
21.6	672

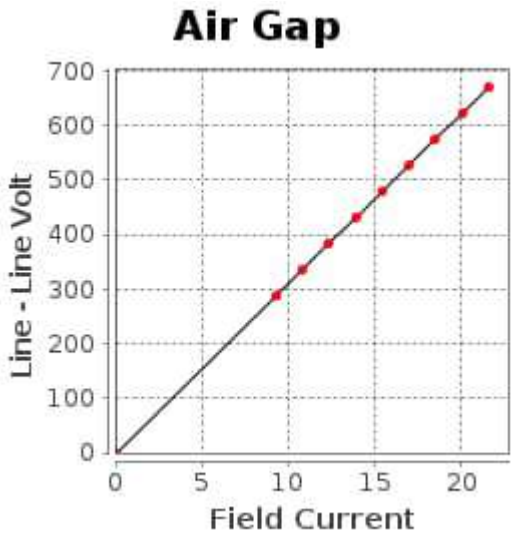

Selected Model

Engine: C15 **Generator Frame:** LC6134F **Genset Rating (kW):** 400.0 **Line Voltage:** 480

Fuel: Diesel **Generator Arrangement:** 4183867 **Genset Rating (kVA):** 500.0 **Phase Voltage:** 277

Frequency: 60 **Excitation Type:** Permanent Magnet **Pwr. Factor:** 0.8 **Rated Current:** 601.4

Duty: STANDBY **Connection:** SERIES STAR **Application:** EPG **Status:** Current

Version: 41205 /40476 /41431 /8510

Reactive Capability Curve

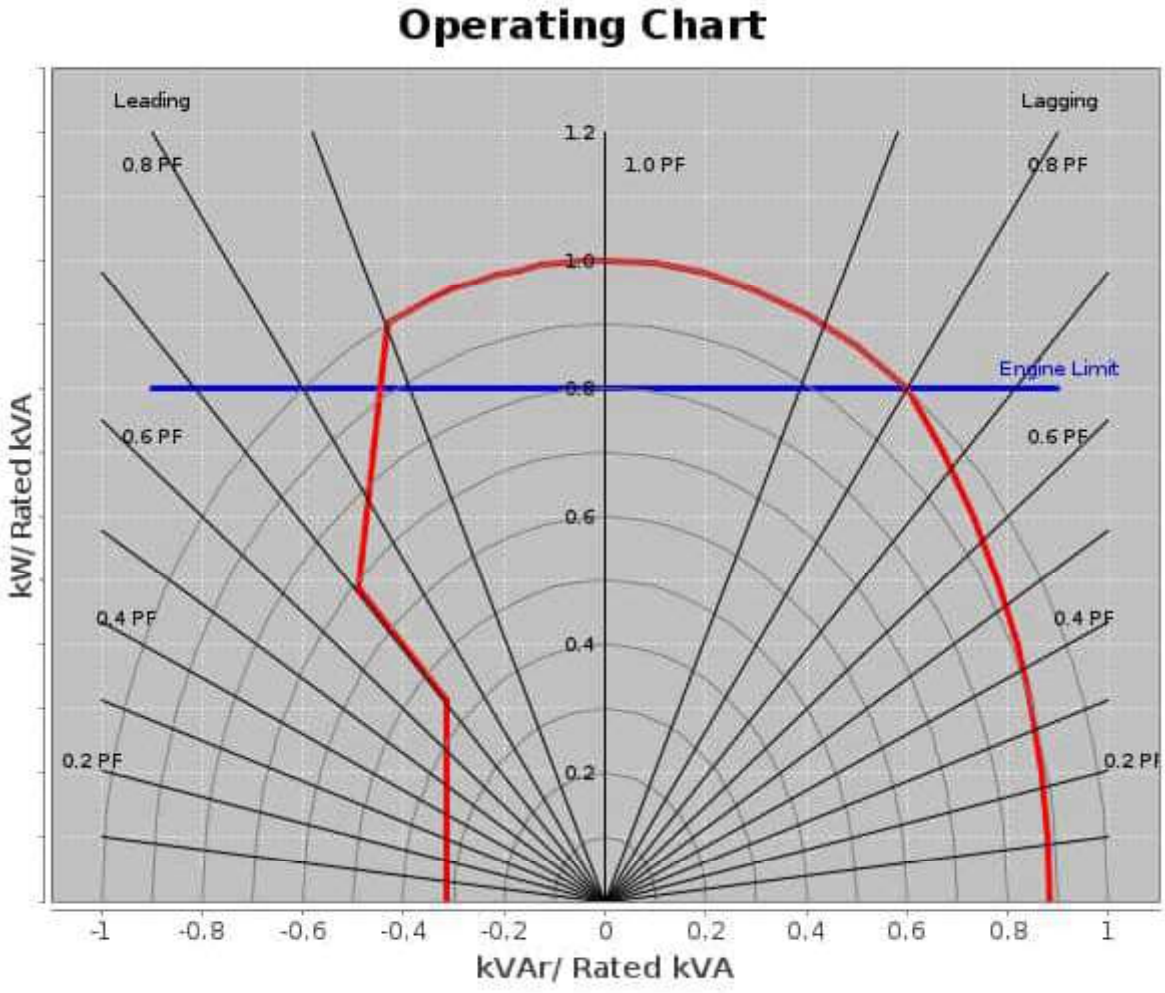

General Information

GENERATOR INFORMATION (DM7900)

---

1. Motor Starting
Motor starting curves are obtained in accordance with IEC60034, and are displayed at 0.6 power factor.

2. Voltage Dip
Prediction of the generator synchronous voltage dip can be made by consulting the plot for the voltage dip value that corresponds to the desired motor starting kVA value.

3. Definitions
A) Generator Keys
Frame: abbreviation of generator frame size
Freq: frequency in hertz.
PP/SB: prime/standby duty respectively
Volts: line - line terminal voltage
kW: rating in electrical kilo watts
Model: engine sales model

B) Generator Temperature Rise
The indicated temperature rises are the IEC/NEMA limits for standby or prime power applications. The quoted rise figures are maximum limits only and are not necessarily indicative of the actual temperature rise of a given machine winding.

C) Centre of Gravity
The specified centre of gravity is for the generator only. For single bearing, and two bearing close coupled generators, the center of gravity is measured from the generator/engine flywheel-housing interface and from the centreline of the rotor Shaft.

For two bearing, standalone generators, the center of gravity is measured from the end of the rotor shaft and from the centerline of the rotor shaft.

D) Generator Current Decrement Curves
The generator current decrement curve indicates the generator armature current arising from a symmetrical three-phase fault at the generator terminals. Generators equipped with AREP or PMG excitation systems will sustain 300% of rated armature current for 10 seconds.

E) Generator Efficiency Curves
The efficiency curve is displayed for the generator only under the given conditions of rating, voltage, frequency and power factor. This is not the overall generating set efficiency curve.

PERFORMANCE DATA[DM8151]

November 1, 2024

Performance Number: DM8151 **Change Level: 04**

SALES MODEL:	C15	**COMBUSTION:**	DIRECT INJECTION
BRAND:	CAT	**ENGINE SPEED (RPM):**	1,800
MACHINE SALES MODEL:		**HERTZ:**	60
ENGINE POWER (BHP):	619	**FAN POWER (HP):**	31.4
GEN POWER WITH FAN (EKW):	400.0	**ASPIRATION:**	TA
COMPRESSION RATIO:	16.1	**AFTERCOOLER TYPE:**	ATAAC
RATING LEVEL:	STANDBY	**AFTERCOOLER CIRCUIT TYPE:**	JW+OC, ATAAC
PUMP QUANTITY:	1	**INLET MANIFOLD AIR TEMP (F):**	120
FUEL TYPE:	DIESEL	**JACKET WATER TEMP (F):**	192.2
MANIFOLD TYPE:	DRY	**TURBO CONFIGURATION:**	SINGLE
GOVERNOR TYPE:	ELEC	**TURBO QUANTITY:**	1
CAMSHAFT TYPE:	STANDARD	**TURBOCHARGER MODEL:**	GTA5518BS-56T-1.58
IGNITION TYPE:	CI	**CERTIFICATION YEAR:**	2006
INJECTOR TYPE:	EUI	**PISTON SPD @ RATED ENG SPD (FT/MIN):**	2,025.0
REF EXH STACK DIAMETER (IN):	6		
MAX OPERATING ALTITUDE (FT):	6,562		

INDUSTRY	SUBINDUSTRY	APPLICATION
ELECTRIC POWER	STANDARD	PACKAGED GENSET
OIL AND GAS	LAND PRODUCTION	PACKAGED GENSET

General Performance Data

GENSET POWER WITH FAN	PERCENT LOAD	ENGINE POWER	BRAKE MEAN EFF PRES (BMEP)	BRAKE SPEC FUEL CONSUMPTN (BSFC)	ISO BRAKE SPEC FUEL CONSUMPTN (BSFC)	VOL FUEL CONSUMPTN (VFC)	ISO VOL FUEL CONSUMPTN (VFC)	ELEC SPEC FUEL CONSUMPTN (ESFC)	ISO ELEC SPEC FUEL CONSUMPTN (ESFC)
EKW	%	BHP	PSI	LB/BHP-HR	LB/BHP-HR	GAL/HR	GAL/HR	LB/EKW-HR	LB/EKW-HR
400.0	100	619	294	0.359	0.354	31.3	30.8	0.555	0.544
360.0	90	557	264	0.363	0.358	28.5	28.1	0.562	0.551
320.0	80	497	236	0.378	0.372	26.5	26.1	0.586	0.575
300.0	75	467	221	0.385	0.380	25.4	25.0	0.600	0.588
280.0	70	437	207	0.392	0.387	24.2	23.8	0.612	0.600
240.0	60	378	179	0.405	0.399	21.6	21.3	0.637	0.625
200.0	50	319	152	0.416	0.410	18.7	18.5	0.665	0.652
160.0	40	263	125	0.418	0.412	15.5	15.3	0.688	0.675
120.0	30	208	98	0.420	0.414	12.3	12.1	0.726	0.712
100.0	25	179	85	0.423	0.417	10.7	10.5	0.759	0.744
80.0	20	151	72	0.433	0.427	9.2	9.1	0.817	0.802
40.0	10	92.2	44	0.501	0.494	6.5	6.4	1.155	1.133

GENSET POWER WITH FAN	PERCENT LOAD	ENGINE POWER	INLET MFLD PRES	INLET MFLD TEMP	EXH MFLD TEMP	EXH MFLD PRES	ENGINE OUTLET TEMP	COMPRESSOR OUTLET PRES	COMPRESSOR OUTLET TEMP
EKW	%	BHP	IN-HG	DEG F	DEG F	IN-HG	DEG F	IN-HG	DEG F
400.0	100	619	65.6	119.6	1,209.5	46.1	908.6	69	385.1
360.0	90	557	60.9	118.8	1,178.8	41.3	893.5	63	364.0
320.0	80	497	57.6	116.5	1,153.7	39.1	879.9	60	353.5
300.0	75	467	55.3	114.7	1,140.9	37.6	873.1	58	346.5
280.0	70	437	52.4	112.8	1,126.7	35.5	866.2	55	336.4
240.0	60	378	45.6	108.3	1,094.2	30.9	852.2	48	311.2
200.0	50	319	37.4	103.2	1,055.6	25.7	837.7	40	278.4
160.0	40	263	26.7	96.9	995.2	19.3	808.5	29	230.5
120.0	30	208	16.4	91.2	915.4	13.4	764.8	18	182.8
100.0	25	179	11.9	88.8	867.9	10.7	737.3	14	160.9
80.0	20	151	8.3	87.1	812.7	8.6	701.0	10	142.7
40.0	10	92.2	3.9	85.6	674.5	6.0	593.1	5	117.3

General Performance Data (Continued)

GENSET POWER WITH FAN	PERCENT LOAD	ENGINE POWER	WET INLET AIR VOL FLOW RATE	ENGINE OUTLET WET EXH GAS VOL FLOW RATE	WET INLET AIR MASS FLOW RATE	WET EXH GAS MASS FLOW RATE	WET EXH VOL FLOW RATE (32 DEG F AND 29.98 IN HG)	DRY EXH VOL FLOW RATE (32 DEG F AND 29.98 IN HG)
EKW	%	BHP	CFM	CFM	LB/HR	LB/HR	FT3/MIN	FT3/MIN

400.0	100	619	1,370.6	3,629.1	5,963.6	6,185.6	1,304.1	1,192.5
360.0	90	557	1,298.7	3,379.0	5,631.7	5,834.1	1,227.7	1,125.4
320.0	80	497	1,265.1	3,249.5	5,479.3	5,667.0	1,192.7	1,096.8
300.0	75	467	1,241.1	3,168.3	5,370.2	5,550.2	1,168.8	1,076.4
280.0	70	437	1,206.1	3,058.6	5,211.4	5,382.8	1,134.3	1,046.0
240.0	60	378	1,118.6	2,796.7	4,818.9	4,972.0	1,048.1	969.0
200.0	50	319	1,005.9	2,472.7	4,318.1	4,451.2	937.1	868.2
160.0	40	263	845.4	2,033.6	3,618.1	3,728.2	788.4	731.9
120.0	30	208	688.4	1,596.0	2,936.4	3,023.5	640.8	596.0
100.0	25	179	618.2	1,393.0	2,632.1	2,708.0	572.2	532.6
80.0	20	151	561.7	1,219.0	2,387.9	2,453.3	516.4	481.6
40.0	10	92.2	490.4	957.1	2,080.5	2,126.7	447.0	421.0

Heat Rejection Data

GENSET POWER WITH FAN	PERCENT LOAD	ENGINE POWER	REJECTION TO JACKET WATER	REJECTION TO ATMOSPHERE	REJECTION TO EXH	EXHAUST RECOVERY TO 350F	FROM OIL COOLER	FROM AFTERCOOLER	WORK ENERGY	LOW HEAT VALUE ENERGY	HIGH HEAT VALUE ENERGY
EKW	%	BHP	BTU/MIN	BTU/MIN	BTU/MIN	BTU/MIN	BTU/MIN	BTU/MIN	BTU/MIN	BTU/MIN	BTU/MIN
400.0	100	619	9,356	4,272	26,284	14,668	3,625	6,340	26,246	68,058	72,499
360.0	90	557	8,773	3,911	24,231	13,431	3,304	5,531	23,635	62,033	66,081
320.0	80	497	8,344	3,685	22,984	12,687	3,064	5,202	21,066	57,528	61,282
300.0	75	467	8,120	3,607	22,252	12,251	2,938	4,984	19,795	55,159	58,758
280.0	70	437	7,871	3,539	21,338	11,710	2,797	4,668	18,527	52,517	55,944
240.0	60	378	7,340	3,401	19,275	10,502	2,498	3,915	16,022	46,893	49,953
200.0	50	319	6,749	3,223	16,871	9,112	2,171	3,030	13,547	40,761	43,420
160.0	40	263	6,057	3,171	13,607	7,154	1,797	1,936	11,169	33,738	35,940
120.0	30	208	5,351	2,804	10,399	5,228	1,422	1,077	8,800	26,690	28,431
100.0	25	179	5,003	2,471	8,941	4,361	1,239	760	7,608	23,266	24,784
80.0	20	151	4,542	2,241	7,636	3,566	1,067	532	6,398	20,041	21,349
40.0	10	92.2	3,608	1,907	5,399	2,113	755	265	3,911	14,167	15,091

PERFORMANCE DATA[DM8151]

Altitude Derate Data

STANDARD

ALTITUDE CORRECTED POWER CAPABILITY (BHP)

AMBIENT OPERATING TEMP (F)	30	40	50	60	70	80	90	100	110	120	130	140	NORMAL
ALTITUDE (FT)													
0	619	619	619	619	619	619	619	619	619	619	619	619	619
1,000	619	619	619	619	619	619	619	619	619	619	619	619	619
2,000	619	619	619	619	619	619	619	619	619	619	619	619	619
3,000	619	619	619	619	619	619	619	619	619	619	619	619	619
4,000	619	619	619	619	619	619	619	619	619	619	619	613	619
5,000	619	619	619	619	619	619	619	619	619	610	599	589	619
6,000	619	619	619	619	619	619	618	607	596	586	576	566	619
7,000	619	619	619	619	616	605	594	583	573	563	554	544	619
8,000	619	619	615	604	592	581	571	560	551	541	532	523	615
9,000	615	603	591	580	569	558	548	538	529	520	511	502	595
10,000	590	579	567	556	546	536	526	517	508	499	490	482	575
11,000	567	555	544	534	524	514	505	496	487	479	471	463	556
12,000	544	533	522	512	502	493	484	476	467	459	451	444	537
13,000	521	511	501	491	482	473	464	456	448	440	433	426	519
14,000	500	490	480	471	462	453	445	437	429	422	415	408	501
15,000	479	469	460	451	442	434	426	419	411	404	397	391	483

Cross Reference

Test Spec	Setting	Engine Arrangement	Engineering Model	Engineering Model Version	Start Effective Serial Number	End Effective Serial Number
0K6279	PP5608	2729743	GS282	-	FSE00001	
0K6279	PP5608	2864922	GS282	-	FTE00001	

Performance Parameter Reference

Parameters Reference:DM9600-15

PERFORMANCE DEFINITIONS

PERFORMANCE DEFINITIONS DM9600
APPLICATION:
Engine performance tolerance values below are representative of a typical production engine tested in a calibrated dynamometer test cell at SAE J1995 standard reference conditions. Caterpillar maintains ISO9001:2000 certified quality management systems for engine test Facilities to assure accurate calibration of test equipment. Engine test data is corrected in accordance with SAE J1995. Additional reference material SAE J1228, J1349, ISO 8665, 3046-1:2002E, 3046-3:1989, 1585, 2534, 2288, and 9249 may apply in part or are similar to SAE J1995. Special engine rating request (SERR) test data shall be noted.
PERFORMANCE PARAMETER TOLERANCE FACTORS:
Power +/- 3%
Torque +/- 3%
Exhaust stack temperature +/- 8%
Inlet airflow +/- 5%
Intake manifold pressure-gage +/- 10%
Exhaust flow +/- 6%
Specific fuel consumption +/- 3%
Specific fuel consumption (C7-C18) +/- 4%
Fuel rate +/- 5%
Specific DEF consumption +/- 3%
DEF rate +/- 5%
Heat rejection +/- 5%
Heat rejection exhaust only +/- 10%
Heat rejection CEM only +/- 10%
Heat Rejection values based on using treated water.
Torque is included for truck and industrial applications, do not use for Gen Set or steady state applications.

PERFORMANCE DATA[DM8151]

On C7 - C18 engines, at speeds of 1100 RPM and under these values are provided for reference only, and may not meet the tolerance listed.
On 3500 and C175 engines, at speeds below Peak Torque these values are provided for reference only, and may not meet the tolerance listed.
These values do not apply to C280/3600. For these models, see the tolerances listed below.
C280/3600 HEAT REJECTION TOLERANCE FACTORS:
Heat rejection +/- 10%
Heat rejection to Atmosphere +/- 50%
Heat rejection to Lube Oil +/- 20%
Heat rejection to Aftercooler +/- 5%
TEST CELL TRANSDUCER TOLERANCE FACTORS:
Torque +/- 0.5%
Speed +/- 0.2%
Fuel flow +/- 1.0%
Temperature +/- 2.0 C degrees
Intake manifold pressure +/- 0.1 kPa
OBSERVED ENGINE PERFORMANCE IS CORRECTED TO SAE J1995 REFERENCE
AIR AND FUEL CONDITIONS.
REFERENCE ATMOSPHERIC INLET AIR
FOR 3500 ENGINES AND SMALLER
SAE J1228 AUG2002 for marine engines, and J1995 JAN2014 for other engines, reference atmospheric pressure is 100 KPA (29.61 in hg), and standard temperature is 25deg C (77 deg F) at 30% relative humidity at the stated aftercooler water temp, or inlet manifold temp.
FOR 3600 ENGINES
Engine rating obtained and presented in accordance with ISO 3046/1 and SAE J1995 JANJAN2014 reference atmospheric pressure is 100 KPA (29.61 in hg), and standard temperature is 25deg C (77 deg F) at 30% relative humidity and 150M altitude at the stated aftercooler water temperature.
MEASUREMENT LOCATION FOR INLET AIR TEMPERATURE
Location for air temperature measurement air cleaner inlet at stabilized operating conditions.
REFERENCE EXHAUST STACK DIAMETER
The Reference Exhaust Stack Diameter published with this dataset is only used for the calculation of Smoke Opacity values displayed in this dataset. This value does not necessarily represent the actual stack diameter of the engine due to the variety of exhaust stack adapter options available. Consult the price list, engine order or general dimension drawings for the actual stack diameter size ordered or options available.
REFERENCE FUEL
DIESEL
Reference fuel is #2 distillate diesel with a 35API gravity;
A lower heating value is 42,780 KJ/KG (18,390 BTU/LB) when used at 15 deg C (59 deg F), where the density is
850 G/Liter (7.0936 Lbs/Gal).
GAS
Reference natural gas fuel has a lower heating value of 33.74 KJ/L (905 BTU/CU Ft). Low BTU ratings are based on 18.64 KJ/L (500 BTU/CU FT) lower heating value gas. Propane ratings are based on 87.56 KJ/L (2350 BTU/CU Ft) lower heating value gas.
ENGINE POWER (NET) IS THE CORRECTED FLYWHEEL POWER (GROSS) LESS
EXTERNAL AUXILIARY LOAD
Engine corrected gross output includes the power required to drive standard equipment; lube oil, scavenge lube oil, fuel transfer, common rail fuel, separate circuit aftercooler and jacket water pumps. Engine net power available for the external (flywheel) load is calculated by subtracting the sum of auxiliary load from the corrected gross flywheel out put power. Typical auxiliary loads are radiator cooling fans, hydraulic pumps, air compressors and battery charging alternators. For Tier 4 ratings additional Parasitic losses would also include Intake, and Exhaust Restrictions.
ALTITUDE CAPABILITY
Altitude capability is the maximum altitude above sea level at standard temperature and standard pressure at which the engine could develop full rated output power on the current performance data set.
Standard temperature values versus altitude could be seen on TM2001.
When viewing the altitude capability chart the ambient temperature is the inlet air temp at the compressor inlet.
Engines with ADEM MEUI and HEUI fuel systems operating at conditions above the defined altitude capability derate for atmospheric pressure and temperature conditions outside the values defined, see TM2001.
Mechanical governor controlled unit injector engines require a setting change for operation at conditions above the altitude defined on the engine performance sheet. See your Caterpillar technical representative for non standard ratings.
REGULATIONS AND PRODUCT COMPLIANCE

PERFORMANCE DATA[DM8151]

TMI Emissions information is presented at 'nominal' and 'Potential Site Variation' values for standard ratings. No tolerances are applied to the emissions data. These values are subject to change at any time. The controlling federal and local emission requirements need to be verified by your Caterpillar technical representative.
Customer's may have special emission site requirements that need to be verified by the Caterpillar Product Group engineer.
EMISSION CYCLE LIMITS:
Cycle emissions Max Limits apply to cycle-weighted averages only. Emissions at individual load points may exceed the cycle-weighted limit.
WET & DRY EXHAUST/EMISSIONS DESCRIPTION:
Wet - Total exhaust flow or concentration of total exhaust flow
Dry - Total exhaust flow minus water vapor or concentration of exhaust flow with water vapor excluded
EMISSIONS DEFINITIONS:
Emissions : DM1176
EMISSION CYCLE DEFINITIONS
1. For constant-speed marine engines for ship main propulsion, including,diesel-electric drive, test cycle E2 shall be applied, for controllable-pitch propeller sets
test cycle E2 shall be applied.
2. For propeller-law-operated main and propeller-law-operated auxiliary engines the test cycle E3 shall be applied.
3. For constant-speed auxiliary engines test cycle D2 shall be applied.
4. For variable-speed, variable-load auxiliary engines, not included above, test cycle C1 shall be applied.
HEAT REJECTION DEFINITIONS:
Diesel Circuit Type and HHV Balance : DM9500
HIGH DISPLACEMENT (HD) DEFINITIONS:
3500: EM1500
RATING DEFINITIONS:
Agriculture : TM6008
Fire Pump : TM6009
Generator Set : TM6035
Generator (Gas) : TM6041
Industrial Diesel : TM6010
Industrial (Gas) : TM6040
Irrigation : TM5749
Locomotive : TM6037
Marine Auxiliary : TM6036
Marine Prop (Except 3600) : TM5747
Marine Prop (3600 only) : TM5748
MSHA : TM6042
Oil Field (Petroleum) : TM6011
Off-Highway Truck : TM6039
On-Highway Truck : TM6038
SOUND DEFINITIONS:
Sound Power : DM8702
Sound Pressure : TM7080
Date Released : 03/12/24

Systems Data
Reference Number: DM8151

November 01, 2024
For Help Desk Phone Numbers
Click Here

AIR INTAKE SYSTEM		
THE INSTALLED SYSTEM MUST COMPLY WITH THE SYSTEM LIMITS BELOW FOR ALL EMISSIONS CERTIFIED ENGINES TO ASSURE REGULATORY COMPLIANCE.		
MAXIMUM ALLOWABLE INTAKE RESTRICTION WITH CLEAN ELEMENT	15	IN-H20
MAXIMUM PRESSURE DROP FROM COMPRESSOR OUTLET TO MANIFOLD INLET (OR MIXER INLET FOR EGR)	4.4	IN-HG
COOLING SYSTEM		
MAXIMUM ALLOWABLE JACKET WATER OUTLET TEMPERATURE	219	DEG F
REGULATOR LOCATION FOR JW (HT) CIRCUIT	OUTLET	
MAXIMUM UNINTERRUPTED FILL RATE	5.0	G/MIN
ENGINE SPEC SYSTEM		
CYLINDER ARRANGEMENT	INLINE	
NUMBER OF CYLINDERS	6	
CYLINDER BORE DIAMETER	5.4	IN
PISTON STROKE	6.7	IN
TOTAL CYLINDER DISPLACEMENT	928	CU IN
STANDARD CRANKSHAFT ROTATION FROM FLYWHEEL END	CCW	
STANDARD CYLINDER FIRING ORDER	1-5-3-6-2-4	
NUMBER 1 CYLINDER LOCATION	FRONT	
STROKES/COMBUSTION CYCLE	4	
EXHAUST SYSTEM		
THE INSTALLED SYSTEM MUST COMPLY WITH THE SYSTEM LIMITS BELOW FOR ALL EMISSIONS CERTIFIED ENGINES TO ASSURE REGULATORY COMPLIANCE.		
MAXIMUM ALLOWABLE SYSTEM BACK PRESSURE	40	IN-H20
FUEL SYSTEM		
MAXIMUM FUEL FLOW FROM TRANSFER PUMP TO ENGINE	111.0	G/HR
MAXIMUM ALLOWABLE FUEL SUPPLY LINE RESTRICTION	8.0	IN-HG
MAXIMUM ALLOWABLE FUEL TEMPERATURE AT TRANSFER PUMP INLET	174	DEG F
MAXIMUM FUEL FLOW TO RETURN LINE FROM ENGINE	103.0	G/HR
MAXIMUM ALLOWABLE FUEL RETURN LINE RESTRICTION	14.8	IN-HG
NORMAL FUEL PRESSURE IN A CLEAN SYSTEM	101.5	PSI
MAXIMUM TRANSFER PUMP PRIMING LIFT WITHOUT PRIMING PUMP	12.1	FT
MAXIMUM FUEL TEMPERATURE AT ENGINE OUTLET	225	DEG F
MAXIMUM ALLOWABLE FUEL TEMPERATURE AT TRANSFER PUMP OUTLET	174	DEG F
LUBE SYSTEM		
CRANKCASE VENTILATION TYPE	TO_ATMOSPHERE	
STARTING SYSTEM		
LOWEST AMBIENT START TEMPERATURE WITHOUT AIDS	32	DEG F

PACKAGE DATA [C15DECD]

NOVEMBER 01, 2024

For Help Desk Phone Numbers Click here

Feature Code:	C15DECD	**Rating Type:**	STANDBY	**Sales model Package:**	PGS400
Engine Sales Model:	C15	**Engine Arrangement Number:**	4230922	**Hertz:**	60
EKW W/F:	400.0	**Noise Reduction:**	0 dBA	**Back Pressure:**	0.0 inH2O

Engine Package Information

Engine Package Data

Package Cooling Information

Open Cooling Data

% Load	Airflow Rate scfm			Ambient Capability Sea Level (Deg F)			Ambient Capability 300 m (Deg F)			Ambient Capability 600 m (Deg F)			Ambient Capability 900 m (Deg F)		
	0 inH2O	1/2 inH2O	3/4 inH2O	0 inH2O	1/2 inH2O	3/4 inH2O	0 inH2O	1/2 inH2O	3/4 inH2O	0 inH2O	1/2 inH2O	3/4 inH2O	0 inH2O	1/2 inH2O	3/4 inH2O
100.0	24684	22566	21541	140	138	134	140	136	132	140	134	129	140	131	127
75.0	24684	22566	21541	140	140	140	140	140	140	140	140	140	140	140	140

SA Level 1 Canopy Cooling Data

% Load	Airflow Rate scfm	Ambient Capability Sea Level (Deg F)	Ambient Capability 300 m (Deg F)	Ambient Capability 600 m (Deg F)	Ambient Capability 900 m (Deg F)
100.0	22071	123	122	120	118
75.0	22071	138	138	136	134

Package Sound Information

Sound Comments :

Open Sound Data

Distance: 3.3 Feet

EKW W/F	% LOAD	OVERALL SOUND DB(A)	OBCF 125HZ DB	OBCF 250HZ DB	OBCF 500HZ DB	OBCF 1000HZ DB	OBCF 2000HZ DB	OBCF 4000HZ DB	OBCF 8000HZ DB
400.0	100.0	103.7	94.0	98.5	98.1	99.1	96.2	91.9	96.8
300.0	75.0	102.8	93.3	98.5	97.9	98.7	95.3	91.0	94.0
200.0	50.0	101.9	92.4	98.4	97.7	98.2	94.4	89.9	89.4
100.0	25.0	101.7	91.8	98.5	97.7	98.0	94.2	89.3	86.2

Distance: 23.0 Feet

EKW W/F	% LOAD	OVERALL SOUND DB(A)	OBCF 125HZ DB	OBCF 250HZ DB	OBCF 500HZ DB	OBCF 1000HZ DB	OBCF 2000HZ DB	OBCF 4000HZ DB	OBCF 8000HZ DB
400.0	100.0	93.7	84.0	88.5	88.1	89.1	86.2	81.9	86.8
300.0	75.0	92.8	83.3	88.5	87.9	88.7	85.3	81.0	84.0
200.0	50.0	91.9	82.4	88.4	87.7	88.2	84.4	79.9	79.4
100.0	25.0	91.7	81.8	88.5	87.7	88.0	84.2	79.3	76.2

Distance: 49.2 Feet

EKW W/F	% LOAD	OVERALL SOUND DB(A)	OBCF 125HZ DB	OBCF 250HZ DB	OBCF 500HZ DB	OBCF 1000HZ DB	OBCF 2000HZ DB	OBCF 4000HZ DB	OBCF 8000HZ DB
400.0	100.0	87.7	78.0	82.5	82.1	83.1	80.2	75.9	80.8
300.0	75.0	86.8	77.3	82.5	81.9	82.7	79.3	75.0	78.0
200.0	50.0	85.9	76.4	82.4	81.7	82.2	78.4	73.9	73.4
100.0	25.0	85.7	75.8	82.5	81.7	82.0	78.2	73.3	70.2

SA Level 1 Canopy Sound Data

Distance: 3.3 Feet

EKW W/F	% LOAD	OVERALL SOUND DB(A)	OBCF 125HZ DB	OBCF 250HZ DB	OBCF 500HZ DB	OBCF 1000HZ DB	OBCF 2000HZ DB	OBCF 4000HZ DB	OBCF 8000HZ DB
400.0	100.0	84.0	86.2	85.9	81.1	77.6	75.3	70.3	74.3
300.0	75.0	84.0	85.1	86.3	80.5	76.9	74.8	69.6	77.3
200.0	50.0	82.4	83.4	85.3	79.9	76.0	73.6	68.4	69.6
100.0	25.0	82.0	82.6	85.2	79.7	75.6	73.2	68.2	61.0

Distance: 23.0 Feet

EKW W/F	% LOAD	OVERALL SOUND DB(A)	OBCF 125HZ DB	OBCF 250HZ DB	OBCF 500HZ DB	OBCF 1000HZ DB	OBCF 2000HZ DB	OBCF 4000HZ DB	OBCF 8000HZ DB
400.0	100.0	73.0	75.7	76.5	69.1	65.6	64.9	58.8	62.6
300.0	75.0	73.1	74.6	76.6	68.6	65.4	64.2	58.3	66.5
200.0	50.0	71.9	73.3	76.2	68.3	64.5	62.9	57.0	61.5
100.0	25.0	71.6	72.9	76.0	68.4	64.5	62.8	58.6	50.4

Distance: 49.2 Feet

EKW W/F	% LOAD	OVERALL SOUND DB(A)	OBCF 125HZ DB	OBCF 250HZ DB	OBCF 500HZ DB	OBCF 1000HZ DB	OBCF 2000HZ DB	OBCF 4000HZ DB	OBCF 8000HZ DB
400.0	100.0	70.0	73.6	74.0	66.1	62.5	60.3	55.5	60.3
300.0	75.0	69.5	72.4	73.6	65.5	62.2	59.5	54.7	61.0
200.0	50.0	69.1	72.0	73.7	65.5	62.1	59.4	54.3	53.2
100.0	25.0	68.7	70.9	73.3	65.6	61.7	59.1	54.1	46.0

WP Canopy - Industrial Sound Data

Distance: 3.3 Feet

EKW W/F	% LOAD	OVERALL SOUND DB(A)	OBCF 125HZ DB	OBCF 250HZ DB	OBCF 500HZ DB	OBCF 1000HZ DB	OBCF 2000HZ DB	OBCF 4000HZ DB	OBCF 8000HZ DB
400.0	100.0	96.2	91.3	94.5	92.7	91.4	89.5	84.7	81.6
300.0	75.0	95.6	90.4	94.2	92.4	91.0	88.6	83.8	79.7
200.0	50.0	94.9	89.3	93.8	91.9	90.4	87.6	82.7	77.8
100.0	25.0	94.5	88.7	93.6	91.5	90.2	87.0	82.3	77.1

Distance: 23.0 Feet

EKW W/F	% LOAD	OVERALL SOUND DB(A)	OBCF 125HZ DB	OBCF 250HZ DB	OBCF 500HZ DB	OBCF 1000HZ DB	OBCF 2000HZ DB	OBCF 4000HZ DB	OBCF 8000HZ DB
400.0	100.0	86.1	84.4	84.9	81.3	81.9	79.2	74.6	48.8
300.0	75.0	85.6	83.9	84.6	81.0	81.5	78.6	74.0	-31.4
200.0	50.0	85.1	83.0	84.2	80.6	81.2	78.1	73.5	-72.2
100.0	25.0	85.0	82.4	83.9	80.3	81.2	77.8	73.4	-46.3

Distance: 49.2 Feet

EKW W/F	% LOAD	OVERALL SOUND DB(A)	OBCF 125HZ DB	OBCF 250HZ DB	OBCF 500HZ DB	OBCF 1000HZ DB	OBCF 2000HZ DB	OBCF 4000HZ DB	OBCF 8000HZ DB
400.0	100.0	80.1	78.4	78.9	75.3	75.9	73.2	68.6	42.8
300.0	75.0	79.6	77.9	78.6	75.0	45.5	72.6	68.0	-37.4
200.0	50.0	79.1	77.0	78.2	74.6	75.2	72.1	67.5	-78.2
100.0	25.0	79.0	76.4	77.9	74.3	75.2	71.8	67.4	-52.3

WP Canopy - Critical Sound Data

Distance: 3.3 Feet

EKW W/F	% LOAD	OVERALL SOUND DB(A)	OBCF 125HZ DB	OBCF 250HZ DB	OBCF 500HZ DB	OBCF 1000HZ DB	OBCF 2000HZ DB	OBCF 4000HZ DB	OBCF 8000HZ DB
400.0	100.0	96.2	91.3	94.5	92.7	91.4	89.5	84.7	81.6
300.0	75.0	95.6	90.4	94.2	92.4	91.0	88.6	83.8	79.7
200.0	50.0	94.9	89.3	93.8	91.9	90.4	94.2	77.8	94.5
100.0	25.0	94.5	88.7	93.6	91.5	90.2	87.0	82.3	77.1

Distance: 23.0 Feet

EKW W/F	% LOAD	OVERALL SOUND DB(A)	OBCF 125HZ DB	OBCF 250HZ DB	OBCF 500HZ DB	OBCF 1000HZ DB	OBCF 2000HZ DB	OBCF 4000HZ DB	OBCF 8000HZ DB
400.0	100.0	86.1	84.4	84.9	81.3	81.9	79.2	74.6	48.8
300.0	75.0	85.6	83.9	84.6	81.0	81.5	78.6	74.0	-31.4
200.0	50.0	85.1	83.0	84.2	80.6	81.2	78.1	73.5	-72.2
100.0	25.0	85.0	82.4	83.9	80.3	81.2	77.8	73.4	-46.3

Distance: 49.2 Feet

EKW W/F	% LOAD	OVERALL SOUND DB(A)	OBCF 125HZ DB	OBCF 250HZ DB	OBCF 500HZ DB	OBCF 1000HZ DB	OBCF 2000HZ DB	OBCF 4000HZ DB	OBCF 8000HZ DB
400.0	100.0	80.1	78.4	78.9	75.3	75.9	73.2	68.6	42.8
300.0	75.0	79.6	77.9	78.6	75.0	45.5	72.6	68.0	-37.4
200.0	50.0	79.1	77.0	78.2	74.6	75.2	72.1	67.5	-78.2
100.0	25.0	79.0	76.4	77.9	74.3	75.2	71.8	67.4	-52.3

Open Exhaust Sound Data

Distance: 3.3 Feet

EKW W/F	% LOAD	OVERALL SOUND DB(A)	OBCF 125HZ DB	OBCF 250HZ DB	OBCF 500HZ DB	OBCF 1000HZ DB	OBCF 2000HZ DB	OBCF 4000HZ DB	OBCF 8000HZ DB
400.0	100.0	120.8	115.0	119.4	113.6	108.8	105.4	99.8	90.7
300.0	75.0	118.2	110.5	115.6	111.3	105.1	103.5	96.4	83.9
200.0	50.0	116.6	99.3	111.3	109.4	105.3	104.0	95.9	79.8
100.0	25.0	111.6	92.9	108.1	104.2	101.4	99.0	88.1	60.2

Open Mechanical Sound Data

Distance: 3.3 Feet

EKW W/F	% LOAD	OVERALL SOUND DB(A)	OBCF 125HZ DB	OBCF 250HZ DB	OBCF 500HZ DB	OBCF 1000HZ DB	OBCF 2000HZ DB	OBCF 4000HZ DB	OBCF 8000HZ DB
400.0	100.0	103.7	94.0	98.5	98.1	99.1	96.2	91.9	96.8
300.0	75.0	102.8	93.3	98.5	97.9	98.7	95.3	91.0	94.0
200.0	50.0	101.9	92.4	98.4	97.7	98.2	94.4	89.9	89.4
100.0	25.0	101.7	91.8	98.5	97.7	98.0	94.2	89.3	86.2

Distance: 23.0 Feet

EKW W/F	% LOAD	OVERALL SOUND DB(A)	OBCF 125HZ DB	OBCF 250HZ DB	OBCF 500HZ DB	OBCF 1000HZ DB	OBCF 2000HZ DB	OBCF 4000HZ DB	OBCF 8000HZ DB
400.0	100.0	93.7	84.0	88.5	88.1	89.1	86.2	81.9	86.8
300.0	75.0	92.8	83.3	88.5	87.9	88.7	85.3	81.0	84.0
200.0	50.0	91.9	82.4	88.4	87.7	88.2	84.4	79.9	79.4
100.0	25.0	91.7	81.8	88.5	87.7	88.0	84.2	79.3	76.2

Distance: 49.2 Feet

EKW W/F	% LOAD	OVERALL SOUND DB(A)	OBCF 125HZ DB	OBCF 250HZ DB	OBCF 500HZ DB	OBCF 1000HZ DB	OBCF 2000HZ DB	OBCF 4000HZ DB	OBCF 8000HZ DB
400.0	100.0	87.7	78.0	82.5	82.1	83.1	80.2	75.9	80.8
300.0	75.0	86.8	77.3	82.5	81.9	82.7	79.3	75.0	78.0
200.0	50.0	85.9	76.4	82.4	81.7	82.2	78.4	73.9	73.4
100.0	25.0	85.7	75.8	82.5	81.7	82.0	78.2	73.3	70.2

Caterpillar Confidential: **Green**
Content Owner: Commercial Processes Division
Web Master(s): PSG Web Based Systems Support
Current Date: 11/1/2024, 11:56:03 AM
© Caterpillar Inc. 2024 All Rights Reserved.
Data Privacy Statement.
Cookie Settings

UNITED STATES ENVIRONMENTAL PROTECTION AGENCY
2024 MODEL YEAR
CERTIFICATE OF CONFORMITY
WITH THE CLEAN AIR ACT

OFFICE OF TRANSPORTATION AND AIR QUALITY
ANN ARBOR, MICHIGAN 48105

Certificate Issued To: **Caterpillar Inc.**
(U.S. Manufacturer or Importer)

Certificate Number: RCPXL15.2NYS-032

Effective Date: 08/08/2023

Expiration Date: 12/31/2024

Byron J. Bunker, Division Director
Compliance Division

Issue Date: 08/08/2023

Revision Date: N/A

Model Year: 2024
Manufacturer Type: Original Engine Manufacturer
Engine Family: RCPXL15.2NYS

Mobile/Stationary Indicator: Stationary
Emissions Power Category: 450<=kW<=560
Fuel Type: Diesel
After Treatment Devices: No After Treatment Devices Installed
Non-after Treatment Devices: Electronic Control, Engine Design Modification

Pursuant to Section 111 and Section 213 of the Clean Air Act (42 U.S.C. sections 7411 and 7547) and 40 CFR Part 60, and subject to the terms and conditions prescribed in those provisions, this certificate of conformity is hereby issued with respect to the test engines which have been found to conform to applicable requirements and which represent the following engines, by engine family, more fully described in the documentation required by 40 CFR Part 60 and produced in the stated model year.

This certificate of conformity covers only those new compression-ignition engines which conform in all material respects to the design specifications that applied to those engines described in the documentation required by 40 CFR Part 60 and which are produced during the model year stated on this certificate of the said manufacturer, as defined in 40 CFR Part 60.

It is a term of this certificate that the manufacturer shall consent to all inspections described in 40 CFR 1068 and authorized in a warrant or court order. Failure to comply with the requirements of such a warrant or court order may lead to revocation or suspension of this certificate for reasons specified in 40 CFR Part 60. It is also a term of this certificate that this certificate may be revoked or suspended or rendered void *ab initio* for other reasons specified in 40 CFR Part 60.

This certificate does not cover engines sold, offered for sale, or introduced, or delivered for introduction, into commerce in the U.S. prior to the effective date of the certificate.

South Coast
Air Quality Management District
21865 Copley Drive, Diamond Bar, CA 91765-4178
(909) 396-2000 • www.aqmd.gov

December 14, 2023

Mr. Bob Shepherd
Caterpillar, Inc./Quinn Power Systems
PO Box 226789
Los Angeles, CA 90022-0489

Dear Mr. Shepherd:

The South Coast Air Quality Management District (South Coast AQMD) has extended Certified Equipment Permits (CEPs) to December 31, 2024 for the stationary emergency internal combustion (IC) engine models listed in the attached table. However, please be reminded that many of these certified diesel-fueled IC engines may not meet Rule 1470 requirements if installed at or near a sensitive receptor or near school grounds and, therefore, may require an aftertreatment system such as a diesel particulate filter in the exhaust stream.

Please note that the South Coast AQMD does not endorse or warrant any specific equipment or manufacturer. Modification of the equipment listed here will void this certification.

If you have additional questions or need further clarification on the CEP program, please feel free to contact CJ Chang at (909) 396-3293, cchang@aqmd.gov; or Susan Tsai at (909) 396-2529, stsai@aqmd.gov.

Sincerely,

David Ono

David Ono
Senior Air Quality Engineering Manager
Engineering and Permitting

DO:ST:CC

Cleaning the air that we breathe...

SOUTH COAST AIR QUALITY MANAGEMENT DISTRICT
Certified ICE-Emergency Generators

CATERPILLAR, INC./QUINN POWER SYSTEMS

Engine Mfg.	Model	Engine Rating	Application No.
Caterpillar	C4.4 (60 kWe)	99.9 BHP	544534
Caterpillar	C4.4 (80/100 kWe)	156.8 BHP	482670
Caterpillar	C-6.6 (125/150/175 kWe)	274 BHP	472638
Perkins	1106D-E66TAG4	274 BHP	457877
Caterpillar	C7.1 (125 kWe)	229 BHP	585257
Caterpillar	C7.1 (150 kWe)	247 BHP	585258
Caterpillar	C7.1 (175 kWe)	280 BHP	585259
Caterpillar	C7.1 (200 kWe)	315 BHP	567863
Caterpillar	C9 (200/230 kWe)	374 BHP	514974
Caterpillar	C-9 (250 kWe)	398 BHP	455162
Caterpillar	C-9 (300 kWe)	480 BHP	455163
Caterpillar	C15 (350 kWe)	546 BHP	554734
Caterpillar	C-15 (400 kWe)	619 BHP	452052
Caterpillar	C15 (450 kWe)	689 BHP	600362
Caterpillar	C15 (500 kWe)	762 BHP	554729
Caterpillar	C15 (550 kWe)	839 BHP	554730
Caterpillar	C-18 (550 kWe)	839 BHP	453934
Caterpillar	C-18 (600 kWe)	900 BHP	453933
Caterpillar	C-18 (750 kWe)	1112 BHP	611877

Caterpillar Emergency Engines
SCAQMD CEP List
January 11, 2024

			EPA Engine Certification (2024) (g/bhp-hr)						TMI Reference Data (g/bhp-hr)	SCAQMD BACT Guidelines (2016) (g/bhp-hr)				
Model	Generator kW	HP	Family Name	HC	NOx	NMHC + NOx	CO	PM	TMI Reference	HC	NOx	NMHC + NOx	CO	PM
C15	400	619	RCPXL15.2NYS	0.16	2.60	2.76	2.16	0.07	DM8151-03			3.0	2.6	0.15

ULCERT
UL 2200 LISTING

INCLUDES THE FOLLOWING:

ALTERNATOR
Alternator insulation system is UL Recognized (UL 1446). PMG and AREP alternators are available. Automatic voltage regulators are UL Recognized.

WIRE HARNESS
AC, DC, and power harnesses are made with UL Listed wire and UL Listed terminals.

CONTROL PANEL
Control panels are comprised of UL Listed and UL Recognized components. EMCP is UL Recognized.

CIRCUIT BREAKER
Output circuit breaker is 100% rated and UL Listed.

TESTING
All UL Listed sets are designed and rigorously tested in accordance with UL Standard for Safety, UL 2200.

LABELING
Labeling meets UL requirements.

MECHANICAL OPTIONS
Mechanical options do not require UL Listing and, therefore, are not affected. The exceptions to this are:

FUEL TANKS
If a fuel tank is ordered with the unit, it must be UL Listed. Two versions are available: 24 hour integral (FCUL2) and 24/48 hour sub-base (FSBT)

ENCLOSURES
Factory installed enclosures meet UL requirements. Weatherproof and sound attenuated versions are available.

ELECTRICAL OPTIONS
The table below shows electrical options that meet UL requirements:

EOS	Lube Oil Sump Heater
WCA1	Low Coolant Level Shutdown
WSS1	Low Coolant Temperature Alarm
AH1H	Anti-Condensation Heater
WHH	Coolant Heater
GOVES	Electronic Governor (Fully Adjustable)
FSS1	Critical Low Fuel Level Shutdown
FSS2	Low Fuel Level Alarm
FSSS	Critical High Fuel Alarm
PBCSUL	UL Listed Battery Charger
PBC10NU	NFPA Battery Charger, UL Listed

UL Listing is available on all diesel fuelled generator sets up to 17S kW at 60 Hz, 600 vac maximum.

LEHE0410-01 (11-18)

BUILT FOR IT.

www.Cat.com/electricpower
©2018 Caterpillar All rights reserved. Materials and specifications are subject to change without notice. The International System of Units (SI) is used in this publication. CAT, CATERPILLAR, their respective logos, ADEM, S•O•S, "BUILT FOR IT", "Caterpillar Yellow", the "Power Edge" trade dress as well as corporate and product identity used herein, are trademarks of Caterpillar and may not be used without permission.

Caterpillar: Confidential Green

CERTIFICATE OF COMPLIANCE
SEISMIC DESIGN OF NONSTRUCTURAL COMPONENTS AND SYSTEMS

Certification No.

VMA-50365-01C (Revision 13)

Expiration Date: 9/30/2023

Certification Parameters:

The nonstructural products (mechanical and/or electrical components) listed on this certificate are CERTIFIED[1] FOR SEISMIC APPLICATIONS in accordance with the following building code[2] releases.

IBC 2018, 2015, 2012, 2009, 2006

The following model designations, options, and accessories are included in this certification. Reference report number VMA-50365-01 as issued by The VMC Group for a complete list of certified models, included accessories/options, and certified installation methods.

Caterpillar; Diesel Gensets
Series C4.4LC, C4.4, C6.6, C7.1, C9, C13, C15, C18

The above referenced equipment is **APPROVED** for seismic application when properly installed[3], used as intended, and contains a Seismic Certification Label referencing this Certificate of Compliance[4]. As limited by the tabulated values, below grade, grade, and roof-level installations, installations in essential facilities, for life safety applications, and/or of equipment containing hazardous contents are permitted and included in this certification with an Equipment Importance Factor assigned as I_p=1.5. The equipment is qualified by comparative analysis and successful seismic shake table testing at the nationally recognized University of California Berkeley Pacific Earthquake Engineering Research Center and CERL (US Army Corp. of Engineers) Laboratory under the review of the ISO Accredited Product Certification Agency, the VMC Group.

Certified Seismic Design Levels			
Certified IBC	Importance $I_p \leq 1.5$ Soil Classes A-E Risk Categories I-IV Design Categories A-F	z/h ≤ 1.0	z/h = 0.0
		$S_{DS} \leq 0.753$ g	$S_{DS} \leq 2.260$ g

Certified Seismic Installation Methods[8]	
Rigid Mounting From Unit Base To Rigid Structure	Rigid Mounting From Unit Base To Fuel Tank
External Isolation Mounting From Unit Base To Rigid Structure	

HEADQUARTERS
113 Main Street
Bloomingdale, NJ 07403
Phone: 973.838.1780
Toll Free: 800.569.8423
Fax: 973.492.8430

CALIFORNIA
180 Promenade Circle
Suite 300
Sacramento, CA 95834
Phone: 916.634.7771

TEXAS
11930 Brittmoore Park Drive
Houston, TX 77041
Phone: 713.466.0003
Fax: 713.466.1355

thevmcgroup.com

CERTIFICATE OF COMPLIANCE

SEISMIC DESIGN OF NONSTRUCTURAL COMPONENTS AND SYSTEMS

Certified Product Table:

Series	Max Rating [kW]	EPA Rating	Length [in]	Width [in]	Height [in]	Max. Off Tank Weight [lbs]	Max. On Tank Weight [lbs]	S_{DS} at z/h=0.0	S_{DS} at z/h=1.0	Certified Installation Methods
C4.4LC	60	Tier 3	98	43	78	2,293	4,979	2.49	0.83	Rigid
C4.4	100		136	44	92	3,961	8,516			
C6.6	175		198		96	5,080	12,752			
C7.1	200					5,338	13,010			
C9	300		219	81	114	8,364	19,850	2.26	0.75	Rigid and Externally Spring Isolated
C13	400		286		124	11,036	30,864			
C15	450		251		127	11,393	28,504			
	500	Tier 2				11,923	29,034			
C18	600		286		124	12,179	32,031			
	500	Tier 4F	247	90	111	13,720	21,687			
	750	Tier 2	275	91	106	15,585	N/A			Rigid
						N/A	28,209		1.29	

Group	Type	SDS (z/h=0)	SDS (z/h=1)	A_{Flex-H}	A_{Rig-H}	A_{Flex-V}	A_{Rig-V}	F_p/W_p
Seismic	AC156	2.26	0.75	2.26	0.9	1.51	0.6	0.54

Notes:
1. Weights include genset, enclosure (where applicable), tank and fuel (where applicable)
2. For a detailed list of weights, certified installation methods, and certified seismic design levels please refer to the certification report referenced on the first page of this certificate.

This certification includes the open generator set and the enclosed generator set when installed with or without the sub-base tank. This certification also includes the sub-base tank as a stand-alone accessory. The generator set and included options shall be a catalogue design and factory supplied. The generator set and applicable options shall be installed and attached to the building structure per the manufacturer supplied seismic installation instructions. For a list of certified configurations and options please directly contact the manufacturer. This certification excludes all non-factory supplied accessories, including but not limited to mufflers, isolation/restraint devices, remote control panels, remote radiators, pumps and other electrical/mechanical components.

IBC CERTIFIED VMC GROUP

VMA-50365-01C (Revision 13)
Issue Date: Friday, May 6, 2016
Revision Date: Friday, November 20, 2020
Expiration Date: Saturday, September 30, 2023

CERTIFICATE OF COMPLIANCE

SEISMIC DESIGN OF NONSTRUCTURAL COMPONENTS AND SYSTEMS

Notes & Comments:

1. All equipment listed herein successfully passed the seismic acceptance criteria for shake testing non-structural components and systems as set forth in the ICC AC-156. The Test Response Spectrum (TRS) enveloped the Required Response Spectrum (RRS) for all units tested. The tested units were representative sample(s) of a contingent of models and all remained captive and structurally sound after the seismic shake simulation. The units also remained functionally operational after the simulation testing as functional testing was completed by the equipment manufacturer before and after the seismic simulations. Although a seismic qualified unit inherently contains some wind resisting capacity, that capacity is undetermined and is excluded from this certification. Snow/Ice loads have been neglected and thus limit the unit to be installed both indoors (covered by an independent protective structure) and out of doors (exposed to accumulating snow/ice) for ground snow loads no greater than 30 psf for all applications.

2. The following building codes are addressed under this certification:
   IBC 2018 referencing ASCE7-16 and ICC-ES AC-156
   IBC 2015 referencing ASCE7-10 and ICC-ES AC-156
   IBC 2012 referencing ASCE7-10 and ICC-ES AC-156
   IBC 2009 referencing ASCE7-05 and ICC-ES AC-156
   IBC 2006 referencing ASCE7-05 and ICC-ES AC-156

3. Refer to the manufacturer supplied installation drawings for anchor requirements and mounting considerations for seismic applications. Required anchor locations, size, style, and load capacities (tension and shear) may be specified on the installation drawings or specified by a 3rd party. Mounting requirement details such as anchor brand, type, embedment depth, edge spacing, anchor-to-anchor spacing, concrete strength, special inspection, wall design, and attachment to non-building structures must be outlined and approved by the Engineer of Record for the project or building. Structural walls, structural floors, and housekeeping pads must also be seismically designed and approved by the project or building Structural Engineer of Record to withstand the seismic anchor loads as defined on the installation drawings. The installing contractor is responsible for ensuring the proper installation of all anchors and mounting hardware.

4. For this certificate and certification to remain valid, this certificate must correspond to the "Seismic Certification Label" found affixed to the unit by the factory. The label ensures the manufacturer built the unit in conformance to the IBC seismic design criteria set forth by the Certified Seismic Qualification Agency, the VMC Group, and meets the seismic design levels claimed by this certificate.

5. Mechanical, Electrical, and Plumbing connections to the equipment must be flexibly attached as to not transfer load through the connection. The structural integrity of any conduit, cable trays, piping, ductwork and/or flexible connections is the responsibility of others. This certification does not guarantee the equipment will remain compliant to NEMA, IP, UL, or CSA standards after a seismic event.

6. This certificate applies to units manufactured at:
   1720 West Kingsbury Street, Seguin, TX 78155
   Rodovia Luiz de Queiorz-KM 157 CEP 13420-900, Piracicaba/SP-Brazil

7. This certification follows the VMC Group's ISO-17065 Scheme.

8. The certified seismic installation methods states are a summary for all series this certificate covers, for more detailed information on the certified seismic installation methods, see the certified product tables.

John P. Giuliano, PE
President, VMC Group

VMA-50365-01C (Revision 13)
Issue Date: Friday, May 6, 2016
Revision Date: Friday, November 20, 2020
Expiration Date: Saturday, September 30, 2023

Quinn Power Systems

Project # / Name:		**Genset ID#**	
Startup Level:		**Genset Serial#**	
Customer:			
Contact Name		**Contact Number**	

Pre-Startup Checklist

This document is provided to assist in the startup of your Caterpillar Equipment. Each checklist item below is to be completed prior to commencement of startup activities. This information will also help to insure against the probability of incurring additional expense.

It is mandatory this document be completed and returned to QPS via the original e-mail sender; indicating the current equipment status, expected completion dates of incomplete items and the requested startup date. Please send photos of noted items as verification of completion. (**Note:** all incomplete items are required to be completed before startup personnel arrive on site).

A minimum of **three/four week notice** is recommended to schedule resources for startup. This does not guarantee availability of startup personnel. Your project manager will coordinate all startup activities with you.

Requested Start-up Date:		**Form Completed by:**	
Start-up Address:	**City:**	**State:**	**Zip Code:**
Site Contact:	**Contact Cell Number:**	**Contact Company:**	
Alternate Site Contact:	**Alternate Contact Cell Number:**	**Contact Company:**	
Security Clearance Required: If yes details need to be provided below in the comments section.	**Noise restrictions: If yes details need to be provided below in the comments section.(provide start/end time)**	**Site Safety Orientation Required:**	**PPE Requirements: If yes please list PPE requirements below in the comments section.**
☐ **Yes** ☐**No**	☐**Yes** ☐ **No**	☐ **Yes** ☐**No**	☐ **Yes** ☐**No**
Comments			

If Quinn Technician arrives on site and the conditions are not found to be in the stated conditions of completion, Quinn Power Systems reserves the right to charge for additional compensation outside the agreed upon contract documents. If the Customer requests, requires, or authorizes Quinn Power Systems to perform any services in addition to the agreed upon Scope of Work the Customer shall pay Quinn Power Systems for such Additional Services at current Quinn Power Systems field service rates. The Customer shall also reimburse Quinn Power Systems for all mileage and travel expenses, subcontractors, dealer technicians, material and equipment incurred in the performance of additional work.

CATERPILLAR®

Quinn Power Systems

EQUIPMENT	STATUS	EXPECTED COMPLETION DATE
Items to be completed before requesting startup scheduling:		
1. Air quality permits obtained / Permit to operate (AQMD, Ventura, SJVAPCD, etc.). **Please submit a PDF copy**		
2. Generator and additional supplied (shipped loose) equipment is set in place (anchored) or mounted. [* Avoid top entry on outdoor rated equipment] **Send Photo**		
3. Coordination Study, if necessary has been completed and addressed prior to startup.	☐Yes ☐No ☐N/A	
4. All Utility and Generator connections terminated and available? **Send Photo**	☐Yes ☐No ☐N/A	
5. All source and feeder cables are installed, terminated and tested per all drawings and codes. **Send Photo**	☐ Yes ☐No ☐N/A	
Items to be completed before startup activities commence (if not applicable list as N/A):		
6. Exhaust systems complete and fully installed (rain cap, rain shield, gaskets, DPF/Silencer, radiator flow, blankets etc.) [*Ensure all exhaust connections include a gasket] **Send Photo**	☐ Yes ☐No ☐ N/A	
7. Louvers, radiator ducting and/or exhaust fans connected, powered and or unobstructed. **Send Photo**	☐ Yes ☐No ☐N/A	
8. Engine batteries and racks installed on each generator. **Send Photo**	☐ Yes ☐No ☐N/A	
9. Confirm AC shore power available at Generator (Battery charger/Space Heater/etc.). **Send Photo**	☐ Yes ☐No ☐N/A	
10. Confirm acceptable fluid levels. (Coolant, Oil, Urea, Etc.) [* Advise of any deficiencies prior to tech arrival]	☐Yes ☐No ☐N/A	
11. Complete installation/support of shipped loose fuel vent extensions. **Send Photo**	☐Yes ☐No ☐N/A	
12. Fuel tank, Day tank and or Gas piping installation complete.	☐ Yes ☐No ☐N/A	
13. Fuel delivery complete including coordination with inspector/fire marshal, please ensure this is complete or scheduled no later than the morning of the 1st Quinn tech visit. [*For Diesel Gensets, it is recommended to have at least 90% of capacity to test alarms/floats (Diesel #2 Ultra low Sulfur fuel)]	☐Yes ☐No ☐N/A	
14. Field wiring complete from generator to (ATS, MTS, Quick connect, Loadbank, DPF, Remote E-stop buttons, etc.) **Send Photo**	☐ Yes ☐No ☐N/A	
15. Communication cabling installed for remote access, BMS, Remote annunciators, etc. **Send Photo**	☐Yes ☐No ☐N/A	
16. Building load available for NFPA 110 testing (2 hr. building load). [* If no building load, confirm approval of 4hr Load Bank test and note a building transfer test, at a later date, will incur additional cost]	☐Yes ☐No ☐N/A	
17. End User has been notified of Start-up and understands that interruptions to the downstream service may occur during building transfer.	☐Yes ☐No ☐N/A	

Name: _____ Date: _____

Title: _____

NFPA 110, 7.13 EPSS Installation Test Procedure

NFPA 110, 7.13 Procedure for EPSS Installation Acceptance

3500 Shepherd St., City of Industry, CA 90601 562-463-6000

Customer	
Site	
	Job Number
Engine M/N	Generator M/N
Engine S/N	Generator S/N
Hours	Gen. Prime No.
Date	Technician

From: **NFPA 110 Standard for Emergency and Standby Power Systems, 2019 Edition**.

Step 1

7.13.1 Upon completion of the installation of the EPSS, the EPS shall be tested to ensure conformity to the requirements of the standard with respect to both power output and function.

7.13.2.2 The test shall be conducted after completion of the installation with all EPSS accessory and support equipment in place and operating.

7.13.4 The EPSS shall perform within the limits specified in this standard.

7.13.4.1 The on-site installation acceptance test shall be conducted in accordance with 7.13.4.1.1 through 7.13.4.1.4.

Procedure		
7.13.4.1.1* In a *new and unoccupied building or facility*, with the prime mover in a cold start condition and the emergency load at operating level, a normal power failure shall be initiated by opening all switches or circuit breakers supplying the normal power to the building or facility. **7.13.4.1.2*** In an *existing occupied building or facility*, with the prime mover in a cold start condition and the emergency load at operating level, a normal power failure shall be simulated by operating at least one transfer switch test function or initiated by opening all switches or breakers supplying normal power to all ATSs that are part of the EPSS being commissioned by this initial acceptance test.		
7.13.4.1.3 When the EPSS consists of paralleled EPS's, the system control function for paralleling and load shedding shall be verified in accordance with system design documentation.		
7.13.4.1.4 The tests conducted in accordance with 7.13.4.1.1 and 7.13.4.1.2 shall be performed in accordance with (1) through (12).		
(1) When the EPSS consists of paralleled EPSs, the quantity of EPSs intended to be operated simultaneously shall be tested simultaneously with building load for the test period identified in 7.13.4.1.4(10).		
(2) The test load shall be all loads that are served by the EPSS. There is no minimum loading requirement for this portion of the test.		
(3) The time delay on start shall be observed and recorded.		Sec
(4) The cranking time until the prime mover starts and runs shall be observed and recorded.		Sec
(5) The time taken to reach operating speed shall be observed and recorded.		Sec
(6)*The engine start function shall be confirmed by verifying operation of the initiating circuit of all transfer switches supplying EPSS loads.		
(7) The time taken to achieve a steady-state condition with all switches transferred to the emergency position shall be observed and recorded.		Sec
(8) The voltage, frequency, and amperes shall be recorded.		
(9) Where applicable, the prime mover oil pressure and water temperature shall be recorded.		
(10) The load test with building load, or other loads that simulate the intended load as specified in Section 5.4, shall be continued for **not less than 2 hours**, and the run time shall be recorded.		

Intervals Start @	Time	Volts			Amps			Kw	Hz	Water Temp	Oil Press	Batt. Charge Rate	Amb Temp
		1	2	3	1	2	3						
Start													
+5 min													
+10 min													
+15 min													
+30 min													
+45 min													
+60 min													
+75 min													
+90 min													
+105 min													
+120 min													

(11) When normal power is restored to the building or facility, the time delay on retransfer to normal power for each switch with a minimum setting of 5 minutes shall be recorded.

Sw-1	Sw-2	Sw-3	Sw-4	Sw-5	Sw-6	Sw-7	Sw-8	

(12) The time delay on the prime mover cooldown period and shutdown shall be recorded.

7.13.4.2 After completion of the test performed in 7.13.4.1, the prime mover shall be allowed to cool for not less than 5 minutes.

Step 2

7.13.4.3* A load shall be applied for a 2-hour, full-load test. The building load shall be permitted to serve as part or all of the load, supplemented by a load bank of sufficient size to provide a load equal to 100 percent of the nameplate kW rating of the EPS, less applicable derating factors for site conditions. With full load applied, the coolant temperature of the generator set shall stabilize at a constant value relative to outdoor ambient temperature at least 30 minutes prior to completion of the test.

7.13.4.3.1 This full-load test shall be initiated after the test specified in 7.13.4.1.4 by any method that starts the prime mover and, upon reaching rated rpm, picks up not less than 30 percent of the nameplate Kw rating for the first 30 minutes, not less than 50 percent of the nameplate Kw rating for the next 30 minutes, and 100 percent of the nameplate Kw rating for the next 60 minutes, less applicable derating factors for site conditions.

7.13.4.3.2 A unity power factor shall be permitted for on-site testing, provided that rated load tests at the rated power factor have been performed by the manufacturer of the EPS prior to shipment.

7.13.4.3.3 Where the EPS is a paralleled multi-unit EPS, each unit shall be permitted to be tested individually at its rating.

7.13.4.3.4 The data specified in 7.13.4.1.4(4), (5), and (7) shall be recorded at first load acceptance of the test period identified in 7.13.4.1.4(10).

(4) The cranking time until the prime mover starts and runs shall be observed and recorded.		Sec
(5) The time taken to reach operating speed shall be observed and recorded.		Sec
(7) The time taken to achieve a steady-state condition with all switches transferred to the emergency position shall be observed and recorded.		Sec

7.13.4.3.5 The data specified in 7.13.4.1.4(8) and 7.13.4.1.4(9) shall be recorded at first load acceptance and every 15 minutes thereafter until the completion of the test period identified in 7.13.4.1.4(10).

(8) The voltage, frequency, and amperes shall be recorded.
(9) Where applicable, record prime mover oil pressure and water temperature.

Full Load Test

Intervals	Time	Volts			Amps			Kw	Hz	Water Temp	Oil Press	Batt. Char	Amb Temp
		1	2	3	1	2	3						
Start													
+5 min													
+10 min													
+15 min													
+30 min													
+45 min													
+60 min													
+75 min													
+90 min													
+105 min													
+120 min													

Step 3

7.13.4.4 Any method recommended by the manufacturer for the cycle crank test shall be utilized to prevent the prime mover from running.

7.13.4.4.1 The control switch shall be set at "run" to cause the prime mover to crank.

7.13.4.4.2 The complete crank/rest cycle specified in 5.6.4.2 and Table 5.6.4.2 shall be observed.

Cranking Method (cycle or continuous)	Cranking Cycle	Rest Period

7.13.4.4.3 The battery charge rate shall be recorded at 5-minute intervals for the first 15 minutes or until charge rate stabilization.

Step 4

7.13.4.5 All safeties specified in 5.6.5 and 5.6.6 shall be tested on site as recommended by the manufacturer.

Exception No 1: It shall be permitted for the manufacturer to test and document overcrank, high engine temperature, low lube oil pressure and overspeed safeties prior to shipment.

Exception No 2: Where the safety functions are proven to be fail-safe as demonstrated by monitoring of normal conditions on engine metering and demonstration that a failed sensor or circuit will not cause shutdown of the engine, further testing of the safeties is not required.

5.6.5.1 A control panel shall be provided and shall contain the following:	Verified
(1) Automatic remote start capability	
(2) "Run-off-automatic" switch	
(3) Shutdowns as required by 5.6.5.2(3)	
(a) Failing to start after specified cranking time	
(b) Overspeed	
(c) Low lubricating oil pressure	
(d) High engine temperature (An automatic engine shutdown device for high lubricating oil temperature shall not be required)	
(e) Operation of remote manual stop station	
(4) Individual alarm indication to annunciate any of the conditions listed in Table 5.6.5.2 and with the following characteristics:	
(a) Battery powered	
(b) Visually indicated.	
(c) Have additional contacts or circuits for a common audible alarm that signals locally and remotely when any of the itemized conditions occurs.	
(d) Have a lamp test switch(es) to test the operation of all alarm lamps.	
(5) Controls to shut down the prime mover upon removal of the initiating signal or manual emergency shutdown	

(6) The ac instruments listed in 5.6.9.9	
5.6.5.3 Engines equipped with a maintaining shutdown device (air shutdown damper) shall have a set of contacts that monitor the position of this device, with local alarm indication and remote annunciation in accordance with Table 5.6.5.2.	
5.6.5.4 The control panel in 5.6.5.2(4) shall be specifically approved for either a Level 1 or a Level 2 EPS consistent with the installation.	
5.6.5.5 The cranking cycle shall be capable of being initiated by any of the following:	
(1) Manual start initiation as specified in 5.6.5.2(2)(a).	
(2) Loss of normal power at any automatic transfer switch (ATS) as part of the EPSS. Prime mover shall start after appropriate time delays, upon operation of a remote switch or set of contacts.	
(3) Clock exerciser located in an ATS or in the control panel.	
(4) Manually operated (test) switch located in each ATS that simulates a loss of power and causes automatic starting and operation until this switch is reset, to cause the engine circuit to duplicate its functions in the same manner commercial power is restored after a true commercial power failure.	
(5) Where an ATS is not used, a signal indicating loss of acceptable power.	
5.6.5.6 All installations shall be provided with at least one remote emergency stop switch for each prime mover.	
5.6.5.6.1 The remote emergency stop switch shall be located outside the room housing the prime mover or exterior enclosure and shall be permitted to be mounted on the exterior of the enclosure.	
5.6.5.6.2 Provisions shall be made so access is limited to qualified persons.	
5.6.5.6.3 The remote emergency stop switch shall identify the prime mover it controls.	
5.6.6* Remote Controls and Alarms. A remote, common audible alarm shall be provided as specified in 5.6.5.2(4).	
5.6.6.1 Alarms and annunciation shall be powered by the prime mover starting battery unless operational constraints make this impracticable. In that circumstance an alternate source from the EPSS, such as storage battery, UPS, or branch circuit supplied by the EPSS, shall be permitted.	
5.6.6.2 The following annunciation shall be provided at a minimum: (1) For Level 1 EPS, local annunciation and facility remote annunciation, or local annunciation and network remote annunciation (2) For Level EPS, local annunciation	
5.6.6.3 For the purposes of defining the types of annunciation in 5.6.6.2, the following shall apply: (1) Local annunciation is located on the equipment itself or within the same equipment room. (2) Facility remote annunciation is located on site but not within the room where the equipment is located. (3) Network remote annunciation is located off site.	
5.6.6.4 An alarm-silencing means shall be provided, and the panel shall include repetitive alarm circuitry so that, after the audible alarm has been silenced, it reactivates after the fault condition has been cleared and has to be restored to its normal position to be silenced again.	
5.6.6.5 In lieu of the requirement in 5.6.6.4, a manual alarm silencing means shall be permitted that silences the audible alarm after the occurrence of the alarm condition, provided such means do not inhibit any subsequent alarms from sounding the audible alarm again without further manual action.	
Battery Tests: Equalize charging of battery cells according to manufacturer's written instructions. Record individual cell voltages. a. Measure charging voltage and voltages between available battery terminals for full-charging and float-charging conditions. Check electrolyte level and specific gravity under both conditions.	
b. Test for contact integrity of all connectors. Perform an integrity load test and a capacity load test for the battery.	
c. Verify acceptance of charge for each element of the battery after discharge.	
d. Verify that measurements are within manufacturer's specifications.	
Battery-Charger Tests: Verify specified rates of charge for both equalizing and float-charging conditions. System Integrity Tests: Methodically verify proper installation, connection, and integrity of each element of engine-generator system before and during system operation. Check for air, exhaust, and fluid leaks.	
Exhaust-System Back-Pressure Tests: Use a manometer with a scale exceeding 40-inch wg (120 kPa). Connect to exhaust line close to engine exhaust manifold. Verify that back pressure at full-rated load is within manufacturer's written allowable limits for the engine.	

System Integrity Tests: Methodically verify proper installation, connection, and integrity of each element of engine-generator system before and during system operation. Check for air, exhaust, and fluid leaks.	

END

Effective with sales to the first user on or after July 1, 2023

CATERPILLAR LIMITED WARRANTY

Industrial, Petroleum, Locomotive, and Agriculture Engine Products and Electric Power Generation Products

Worldwide

Caterpillar Inc. or any of its subsidiaries ("Caterpillar") warrants new and remanufactured engines and electric power generation products (new and new with Cat Reman Engines) sold by it (including any products of other manufacturers packaged and sold by Caterpillar), to be free from defects in material and workmanship.

This warranty does not apply to engines sold for use in on-highway vehicle or marine applications; engines in machines manufactured by or for Caterpillar; C175, 3500 and 3600 series engines used in locomotive applications; 3000 Family engines, C0.5 through C4.4 and ACERT™ (C6.6, C7, C7.1, C9, C9.3, C11, C13, C15, C18, C27, and C32) engines used in industrial, mobile agriculture and locomotive applications; or Cat® batteries; or Electric Power Generation products manufactured or assembled and sold in India except GC models, which are covered by this warranty. These products (except for GC models) are covered by other Caterpillar warranties.

This warranty is subject to the following:

Warranty Period

- For industrial engines, engines in a petroleum applications or Petroleum Power Systems (excluding petroleum fire pump application), or engines in a Locomotive application, or Uninterruptible Power Supply (UPS) systems, the warranty period is 12 months after date of delivery to the first user.
- For engines used in petroleum fire pump and mobile agriculture applications the warranty period is 24 months after date of delivery to the first user.
- For controls only (EPIC), configurable and custom switchgear products, and automatic transfer switch products, the warranty period is 24 months after date of delivery to the first user.
- For new CG132, CG170 and CG260 series power generation products the warranty period is 24 months after date of delivery to first user, but not to exceed 36 months from shipment from the Caterpillar place of manufacture.
- For electric power generation products other than CG132, CG170 and CG260 series in prime or continuous applications the warranty period is 12 months. For standby applications the warranty period is 24 months/1000 hours. For emergency standby applications the warranty period is 24 months/400 hours. All terms begin after date of delivery to the first user.
- For all other applications the warranty period is 12 months after date of delivery to the first user.

Caterpillar Responsibilities

If a defect in material or workmanship is found during the warranty period, Caterpillar will, during normal working hours and at a place of business of a Cat dealer or other source approved by Caterpillar:

- Provide (at Caterpillar's choice) new, Remanufactured, or Caterpillar approved repaired parts or assembled components needed to correct the defect.

Note: New, remanufactured, or Caterpillar approved repaired parts or assembled components provided under the terms of this warranty are warranted for the remainder of the warranty period applicable to the product in which installed as if such parts were original components of that product. Items replaced under this warranty become the property of Caterpillar.

- Replace lubricating oil, filters, coolant, and other service items made unusable by the defect.
- Provide reasonable and customary labor needed to correct the defect, including labor to disconnect the product from and reconnect the product to its attached equipment, mounting, and support systems, if required.

For new 3114, 3116, and 3126 engines and, new and Caterpillar rebuild electric power generation products (which includes the following: any new products of other manufacturers packaged and sold by Caterpillar)

- Provide travel labor, up to four hours round trip, if in the opinion of Caterpillar, the product cannot reasonably be transported to a place of business of a Cat dealer or other source approved by Caterpillar (travel labor in excess of four hours round trip, and any meals, mileage, lodging, etc. is the user's responsibility).

For all other products:

- Provide reasonable travel expenses for authorized mechanics, including meals, mileage, and lodging, when Caterpillar chooses to make the repair on-site.

User Responsibilities

The user is responsible for:

- Providing proof of the delivery date to the first user.
- Labor costs, except as stated under "Caterpillar Responsibilities," including costs beyond those required to disconnect the product from and reconnect the product to its attached equipment, mounting, and support systems.
- Travel or transporting costs, except as stated under "Caterpillar Responsibilities."
- Premium or overtime labor costs.
- Parts shipping charges in excess of those that are usual and customary.
- Local taxes, if applicable.
- Costs to investigate complaints, unless the problem is caused by a defect in Caterpillar material or workmanship.
- Giving timely notice of a warrantable failure and promptly making the product available for repair.
- Performance of the required maintenance (including use of proper fuel, oil, lubricants, and coolant) and items replaced due to normal wear and tear.
- Allowing Caterpillar access to all electronically stored data.

Limitations

Caterpillar is not responsible for:

- Failures resulting from any use or installation that Caterpillar judges improper.
- Failures resulting from attachments, accessory items, and parts not sold or approved by Caterpillar.
- Failures resulting from abuse, neglect, and/or improper repair.
- Failures resulting from user's delay in making the product available after being notified of a potential product problem.
- Failures resulting from unauthorized repairs or adjustments, and unauthorized fuel setting changes.
- Damage to parts, fixtures, housings, attachments, and accessory items that are not part of the engine, Cat Selective Catalytic Reduction System or electric power generation product (including any products of other manufacturers packaged and sold by Caterpillar).
- Repair of components sold by Caterpillar that is warranted directly to the user by their respective manufacturer. Depending on type of application, certain exclusions may apply. Consult your Cat dealer for more information.

(Continued on reverse side…)

This warranty covers every major component of the products. Claims under this warranty should be submitted to a place of business of a Cat dealer or other source approved by Caterpillar. For further information concerning either the location to submit claims or Caterpillar as the issuer of this warranty, write Caterpillar Inc., 100 N.E. Adams St., Peoria, IL USA 61629, telephone 1 (309) 675-1000, or go to URL, www.cat.com, Find Your Dealer.

Caterpillar's obligations under this Limited Warranty are subject to, and shall not apply in contravention of, the laws, rules, regulations, directives, ordinances, orders, or statutes of the United States, or of any other applicable jurisdiction, without recourse or liability with respect to Caterpillar.

A) For products operating outside of Australia, Fiji, Nauru, New Caledonia, New Zealand, Papua New Guinea, the Solomon Islands, and Tahiti, the following is applicable:

NEITHER THE FOREGOING EXPRESS WARRANTY NOR ANY OTHER WARRANTY BY CATERPILLAR, EXPRESS OR IMPLIED, IS APPLICABLE TO ANY ITEM CATERPILLAR SELLS THAT IS WARRANTED DIRECTLY TO THE USER BY ITS MANUFACTURER.

THIS WARRANTY IS EXPRESSLY IN LIEU OF ANY OTHER WARRANTIES, EXPRESS OR IMPLIED, INCLUDING ANY WARRANTY OF MERCHANTABILITY OR FITNESS FOR A PARTICULAR PURPOSE, EXCEPT CATERPILLAR EMISSION-RELATED COMPONENT WARRANTIES FOR NEW ENGINES, WHERE APPLICABLE. REMEDIES UNDER THIS WARRANTY ARE LIMITED TO THE PROVISION OF MATERIAL AND SERVICES, AS SPECIFIED HEREIN.

CATERPILLAR IS NOT RESPONSIBLE FOR INCIDENTAL OR CONSEQUENTIAL DAMAGES.

CATERPILLAR EXCLUDES ALL LIABILITY FOR OR ARISING FROM ANY NEGLIGENCE ON ITS PART OR ON THE PART OF ANY OF ITS EMPLOYEES, AGENTS, OR REPRESENTATIVES IN RESPECT OF THE MANUFACTURE OR SUPPLY OF GOODS OR THE PROVISION OF SERVICES RELATING TO THE GOODS.

IF OTHERWISE APPLICABLE, THE VIENNA CONVENTION ON CONTRACTS FOR THE INTERNATIONAL SALE OF GOODS IS EXCLUDED IN ITS ENTIRETY.

For personal or family use engines or electric power generation products, operating in the USA, its territories and possessions, some states do not allow limitations on how long an implied warranty may last nor allow the exclusion or limitation of incidental or consequential damages. Therefore, the previously expressed exclusion may not apply to you. This warranty gives you specific legal rights and you may also have other rights, which vary by jurisdiction. To find the location of the nearest Cat dealer or other authorized repair facility, call (800) 447-4986. If you have questions concerning this warranty or its applications, call or write:

In USA and Canada: Caterpillar Inc, 100 N.E. Adams St., Peoria, IL USA 61629, Attention: Customer Service Manager, Telephone 1 (309) 675-1000. Outside the USA and Canada: Contact your Cat dealer, go to URL, www.cat.com, Find Your Dealer.

B) For products operating in Australia, Fiji, Nauru, New Caledonia, New Zealand, Papua New Guinea, the Solomon Islands, and Tahiti, the following is applicable:

THIS WARRANTY IS IN ADDITION TO WARRANTIES AND CONDITIONS IMPLIED BY STATUTE AND OTHER STATUTORY RIGHTS AND OBLIGATIONS THAT BY ANY APPLICABLE LAW CANNOT BE EXCLUDED, RESTRICTED, OR MODIFIED ("MANDATORY RIGHTS"). ALL OTHER WARRANTIES OR CONDITIONS, EXPRESS OR IMPLIED (BY STATUTE OR OTHERWISE), ARE EXCLUDED. WITHOUT LIMITING THE FOREGOING PROVISIONS OF THIS PARAGRAPH, WHERE A PRODUCT IS SUPPLIED FOR BUSINESS PURPOSES, THE CONSUMER GUARANTEES UNDER THE CONSUMER GUARANTEES ACT 1993 (NZ) WILL NOT APPLY.

NEITHER THIS WARRANTY NOR ANY OTHER CONDITION OR WARRANTY BY CATERPILLAR, EXPRESS OR IMPLIED (SUBJECT ONLY TO THE MANDATORY RIGHTS), IS APPLICABLE TO ANY ITEM CATERPILLAR SELLS THAT IS WARRANTED DIRECTLY TO THE USER BY ITS MANUFACTURER.

IF THE MANDATORY RIGHTS MAKE CATERPILLAR LIABLE IN CONNECTION WITH SERVICES OR GOODS, THEN TO THE EXTENT PERMITTED UNDER THE MANDATORY RIGHTS, THAT LIABILITY SHALL BE LIMITED AT CATERPILLAR'S OPTION TO (a) IN THE CASE OF SERVICES, THE SUPPLY OF THE SERVICES AGAIN OR THE PAYMENT OF THE COST OF HAVING THE SERVICES SUPPLIED AGAIN AND (b) IN THE CASE OF GOODS, THE REPAIR OR REPLACEMENT OF THE GOODS, THE SUPPLY OF EQUIVALENT GOODS, THE PAYMENT OF THE COST OF SUCH REPAIR OR REPLACEMENT OR THE ACQUISITION OF EQUIVALENT GOODS.

CATERPILLAR EXCLUDES ALL LIABILITY FOR OR ARISING FROM ANY NEGLIGENCE ON ITS PART OR ON THE PART OF ANY OF ITS EMPLOYEES, AGENTS OR REPRESENTATIVES IN RESPECT OF THE MANUFACTURE OR SUPPLY OF GOODS OR THE PROVISION OF SERVICES RELATING TO THE GOODS.

CATERPILLAR IS NOT LIABLE FOR INCIDENTAL OR CONSEQUENTIAL DAMAGES UNLESS IMPOSED UNDER MANDATORY RIGHTS.

IF OTHERWISE APPLICABLE, THE VIENNA CONVENTION ON CONTRACTS FOR THE INTERNATIONAL SALE OF GOODS IS EXCLUDED IN ITS ENTIRETY.

C) For products supplied in Australia:

IF THE PRODUCTS TO WHICH THIS WARRANTY APPLIES ARE:

I. PRODUCTS OF A KIND ORDINARILY ACQUIRED FOR PERSONAL, DOMESTIC OR HOUSEHOLD USE OR CONSUMPTION; OR

II. PRODUCTS THAT COST AUD 100,000 OR LESS,

WHERE THOSE PRODUCTS WERE NOT ACQUIRED FOR THE PURPOSE OF RE-SUPPLY OR FOR THE PURPOSE OF USING THEM UP OR TRANSFORMING THEM IN THE COURSE OF PRODUCTION OR MANUFACTURE OR IN THE COURSE OF REPAIRING OTHER GOODS OR FIXTURES, THEN THIS SECTION C APPLIES.

THE FOLLOWING MANDATORY TEXT IS INCLUDED PURSUANT TO THE AUSTRALIAN CONSUMER LAW AND INCLUDES REFERENCES TO RIGHTS THE USER MAY HAVE AGAINST THE DIRECT SUPPLIER OF THE PRODUCTS: OUR GOODS COME WITH GUARANTEES THAT CANNOT BE EXCLUDED UNDER THE AUSTRALIAN CONSUMER LAW. YOU ARE ENTITLED TO A REPLACEMENT OR REFUND FOR A MAJOR FAILURE AND COMPENSATION FOR ANY OTHER REASONABLY FORESEEABLE LOSS OR DAMAGE. YOU ARE ALSO ENTITLED TO HAVE THE GOODS REPAIRED OR REPLACED IF THE GOODS FAIL TO BE OF ACCEPTABLE QUALITY AND THE FAILURE DOES NOT AMOUNT TO A MAJOR FAILURE. THE INCLUSION OF THIS TEXT DOES NOT CONSTITUTE ANY REPRESENTATION OR ACCEPTANCE BY CATERPILLAR OF LIABILITY TO THE USER OR ANY OTHER PERSON IN ADDITION TO THAT WHICH CATERPILLAR MAY HAVE UNDER THE AUSTRALIAN CONSUMER LAW.

TO THE EXTENT THE PRODUCTS FALL WITHIN THIS SECTION C BUT ARE NOT OF A KIND ORDINARILY ACQUIRED FOR PERSONAL, DOMESTIC OR HOUSEHOLD USE OR CONSUMPTION, CATERPILLAR LIMITS ITS LIABILITY TO THE EXTENT IT IS PERMITTED TO DO SO UNDER THE AUSTRALIAN CONSUMER LAW TO, AT ITS OPTION, THE REPAIR OR REPLACEMENT OF THE PRODUCTS, THE SUPPLY OF EQUIVALENT PRODUCTS, OR THE PAYMENT OF THE COST OF SUCH REPAIR OR REPLACEMENT OR THE ACQUISITION OF EQUIVALENT PRODUCTS.

THE WARRANTY SET OUT IN THIS DOCUMENT IS GIVEN BY CATERPILLAR INC. OR ANY OF ITS SUBSIDIARIES, 100 N. E. ADAMS ST, PEORIA, IL USA 61629, TELEPHONE 1 309 675 1000,THE USER IS RESPONSIBLE FOR ALL COSTS ASSOCIATED WITH MAKING A CLAIM UNDER THE WARRANTY SET OUT IN THIS DOCUMENT, EXCEPT AS EXPRESSLY STATED OTHERWISE IN THIS DOCUMENT, AND THE USER IS REFERRED TO THE BALANCE OF THE DOCUMENT TERMS CONCERNING CLAIM PROCEDURES, CATERPILLAR RESPONSIBILITIES AND USER RESPONSIBILITIES.

TO THE EXTENT PERMISSIBLE BY LAW, THE TERMS SET OUT IN THE REMAINDER OF THIS WARRANTY DOCUMENT (INCLUDING SECTION B) CONTINUE TO APPLY TO PRODUCTS TO WHICH THIS SECTION C APPLIES.

© 2023 Caterpillar. All Rights Reserved.
CAT, CATERPILLAR, LET'S DO THE WORK,
their respective logos, "Caterpillar Corporate Yellow", the "Power Edge" and Cat "Modern Hex"
trade dress as well as corporate and product identity used herein, are trademarks of Caterpillar and may not be used without permission.

PARTS AND SERVICE STATEMENT

QUINN POWER SYSTEMS was organized on August 1, 2003 by the QUINN Company and is the only factory-authorized Caterpillar and Olympian Engine Distributor serving Los Angeles, Orange, and Inyo-Kern Counties in Southern California

QUINN POWER SYSTEMS is the successor to POWER SYSTEMS Associates, that was established in 1972 from the former Industrial Division of Shepherd Machinery Company. QUINN Company, serving Central California, was founded in 1919 and is the oldest Caterpillar dealer in California. We are Caterpillar's parts, service and sales representative.

QUINN POWER SYSTEMS offers genuine Caterpillar / Olympian parts and factory-trained mechanics. These are available on a 24-hour basis through our main office:

QUINN POWER SYSTEMS

PARTS AND SERVICE LOCATIONS

SELMA
Quinn Power Systems
10273 S. Golden State Blvd.
Selma, CA 93662-9410
P.O. Box 12625
Fresno, CA 93778-2625
(559) 891-6764

CORCORAN
Quinn Power Systems
510 Pickerell
Corcoran, CA 93212-1925
P.O. Box 578
Corcoran, CA 93212-0578
(559) 992-2193

CITY OF INDUSTRY
Quinn Power Systems
3500 Shepherd Street
City of Industry
562-463-6049

BAKERSFIELD
Quinn Power Systems
2200 Pegasus Dr.
Bakersfield, CA 93308-6801
Ph: (661)- 393-5800

OXNARD
Quinn Power Systems
801 Del Norte Blvd.
Oxnard, CA 93030-2692
P.O. Box 5227
Oxnard, CA 93031-5227
(805) 485-2171

RIVERSIDE
Quinn Power Systems
656 E La Cadena Drive
Riverside, CA 92507
(951) 683-5960

SALINAS
Quinn Power Systems
1300 Abbott Street
Salinas, CA 93901-4507
P.O. Box 1908
Salinas, CA 93902-1908
(831) 758-8461

SANTA MARIA
Quinn Power Systems
1655 N. Carlotti Drive
Santa Maria, CA 93454-1503
(805) 925-8611

PACKAGE WEIGHTS (ESTIMATES):

GENERATOR SET PACKAGE "DRY" WEIGHT	15,000 LBS.
333 GALLONS (USABLE) DIESEL FUEL	2,500 LBS.
TOTAL PACKAGE "WET" WEIGHT	17,500 LBS.

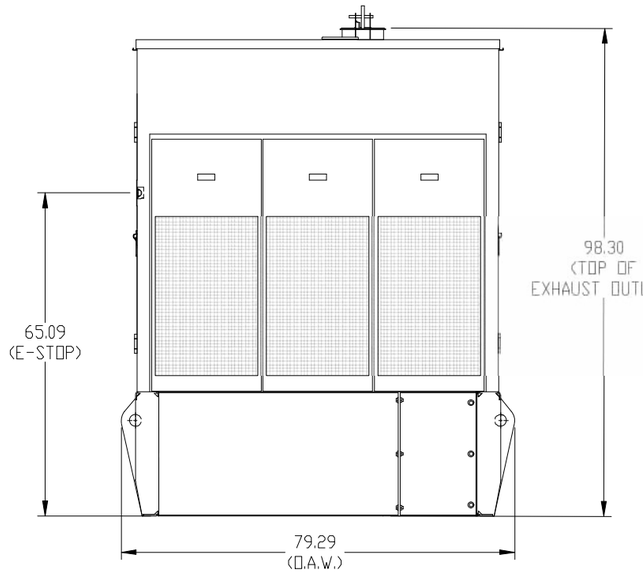

REAR VIEW

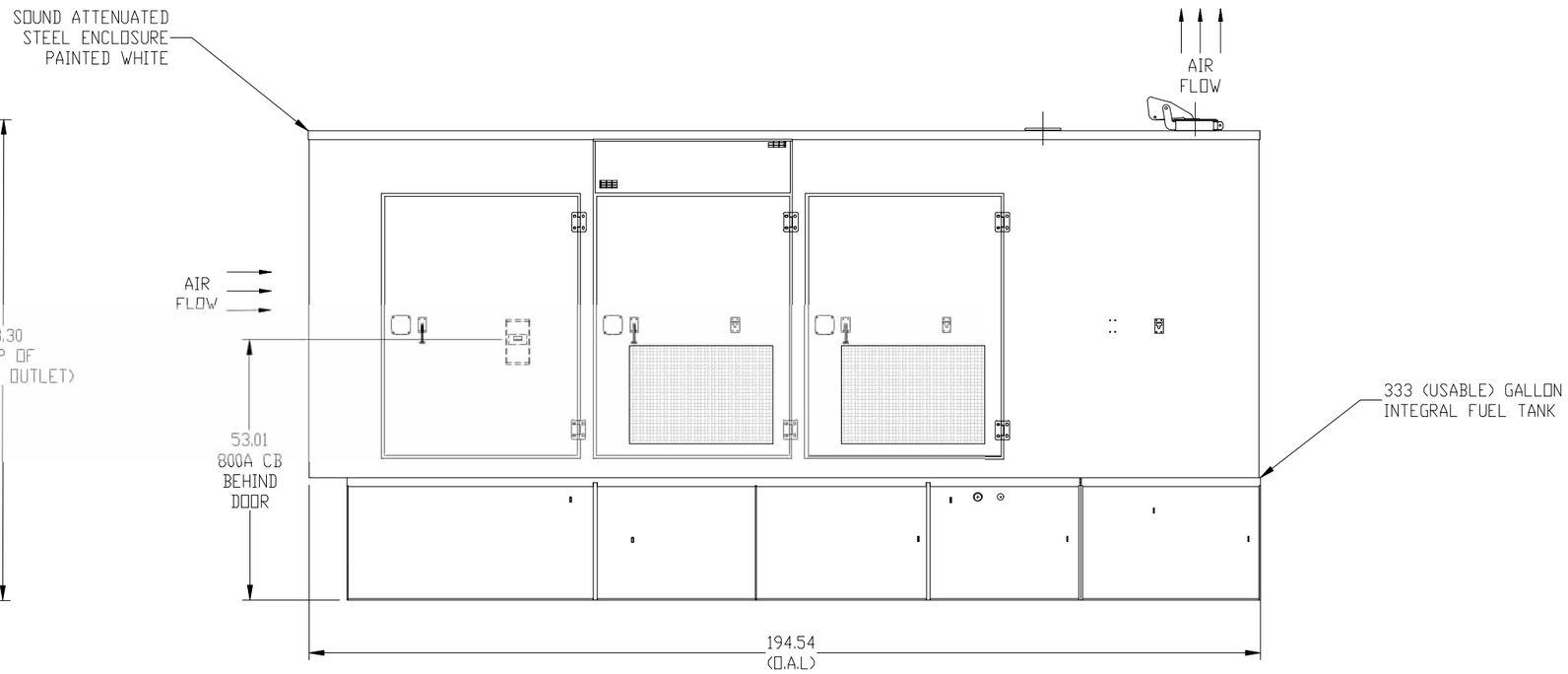

RIGHT SIDE VIEW

ITEM NO.	PART NO. OR SIZE	DRAWING NO.	NO. REQ'D	MATERIAL DESCRIPTION	REMARKS
3	LS-1429	449-9471	1	330 GALLON INTEGRAL TANK	CATERPILLAR
2	LS-4703	449-9471	1	LEVEL 1 SOUND ATTENUATED ENCLOSURE (WHITE)	CATERPILLAR
1	LS-1441	449-9471	1	C15 400KW, 277/480V 60HZ, 1800 RPM GENSET	CATERPILLAR

DRAWN D. URIARTE | DATE 11/14/2024

UNLESS NOTED OTHERWISE DIMENSIONS ARE IN INCHES

QUINN POWER SYSTEMS

656 E. LA CADENA DR
RIVERSIDE, CA 92507

TITLE
C15 400KW 277/480V 3-PHASE
GENERATOR SET

JOB: 240171
CITY OF REDLANDS - TEXAS BS

STOCK NO. RE16824 & RE16825
SHEET 1 OF 3

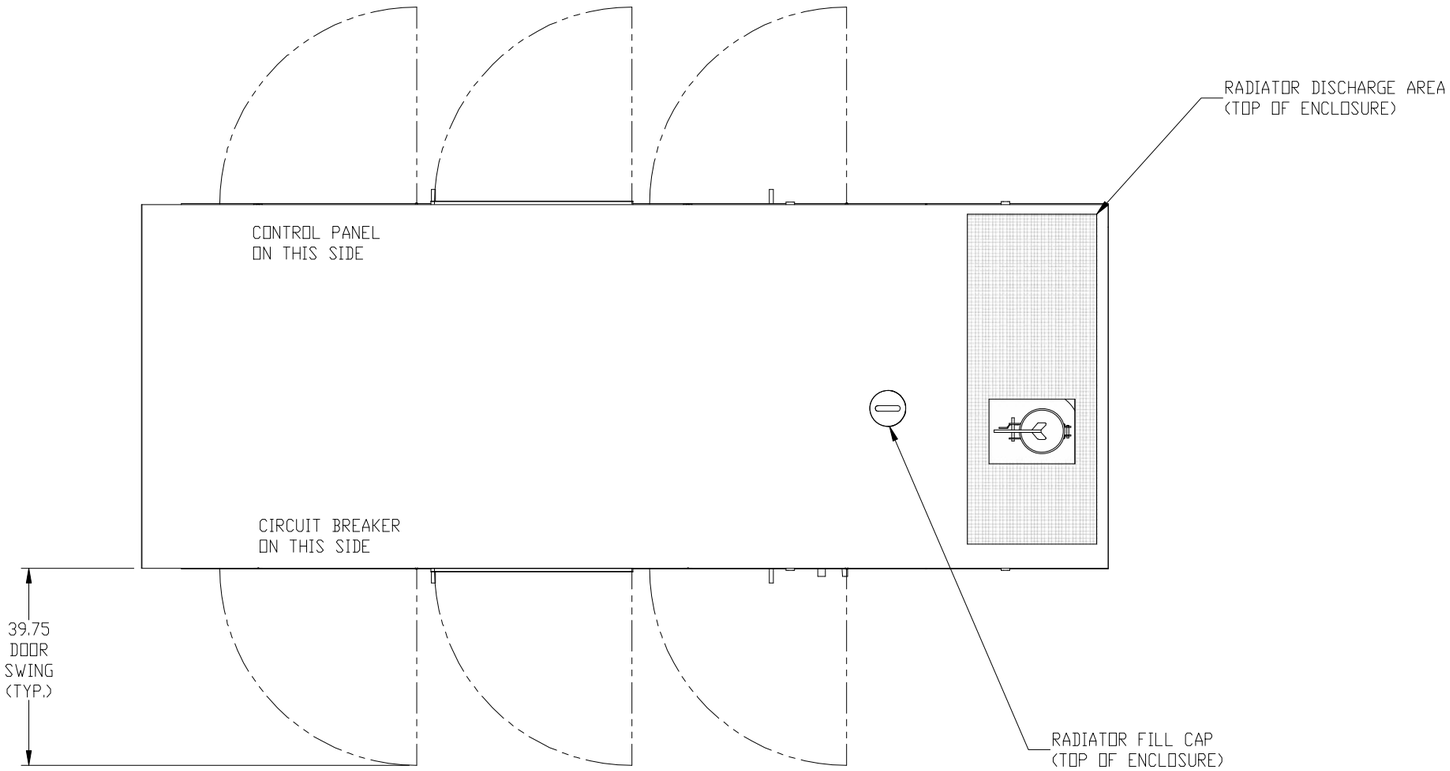

TOP VIEW

ITEM NO.	PART NO. OR SIZE	DRAWING NO.	NO. REQ'D	MATERIAL DESCRIPTION	REMARKS
3	LS-1429	449-9471	1	330 GALLON INTEGRAL TANK	CATERPILLAR
2	LS-4703	449-9471	1	LEVEL 1 SOUND ATTENUATED ENCLOSURE (WHITE)	CATERPILLAR
1	LS-1441	449-9471	1	C15 400KW, 277/480V 60HZ, 1800 RPM GENSET	CATERPILLAR

DRAWN D. URIARTE | DATE 11/14/2024

UNLESS NOTED OTHERWISE DIMENSIONS ARE IN INCHES

QUINN POWER SYSTEMS CAT

656 E. LA CADENA DR
RIVERSIDE, CA 92507

TITLE
C15 400KW 277/480V 3-PHASE
GENERATOR SET

JOB: 240171
CITY OF REDLANDS - TEXAS BS

STOCK NO. RE16824 & RE16825
SHEET 2 OF 3

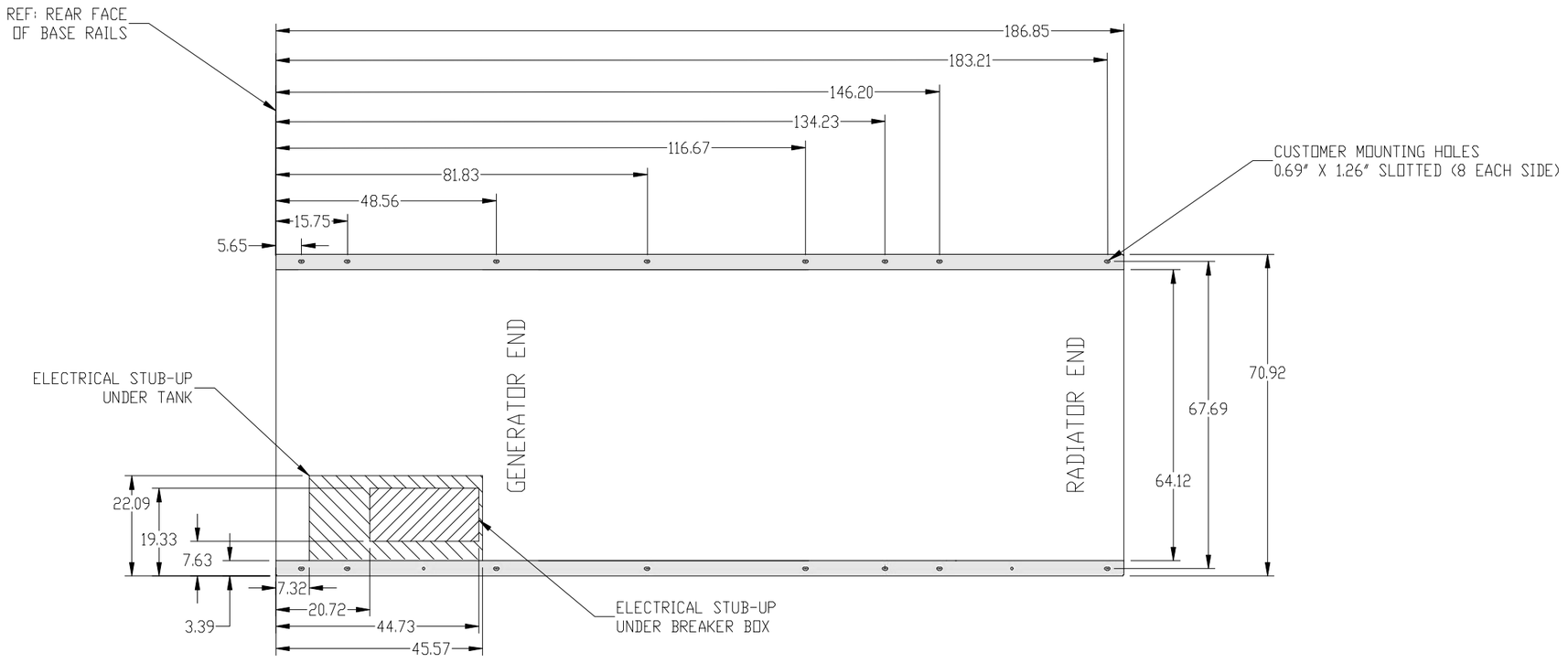

FOOTPRINT – STUB UP AND MOUNTING HOLES (TOP VIEW)

ITEM NO.	PART NO. OR SIZE	DRAWING NO.	NO. REQ'D	MATERIAL DESCRIPTION	REMARKS
3	LS-1429	449-9471	1	330 GALLON INTEGRAL TANK	CATERPILLAR
2	LS-4703	449-9471	1	LEVEL 1 SOUND ATTENUATED ENCLOSURE (WHITE)	CATERPILLAR
1	LS-1441	449-9471	1	C15 400KW, 277/480V 60HZ, 1800 RPM GENSET	CATERPILLAR

DRAWN D. URIARTE | DATE 11/14/2024

UNLESS NOTED OTHERWISE DIMENSIONS ARE IN INCHES

QUINN POWER SYSTEMS

656 E. LA CADENA DR
RIVERSIDE, CA 92507

TITLE
C15 400KW 277/480V 3-PHASE GENERATOR SET

JOB: 240171
CITY OF REDLANDS - TEXAS BS

STOCK NO. RE16824 & RE16825
SHEET 3 OF 3

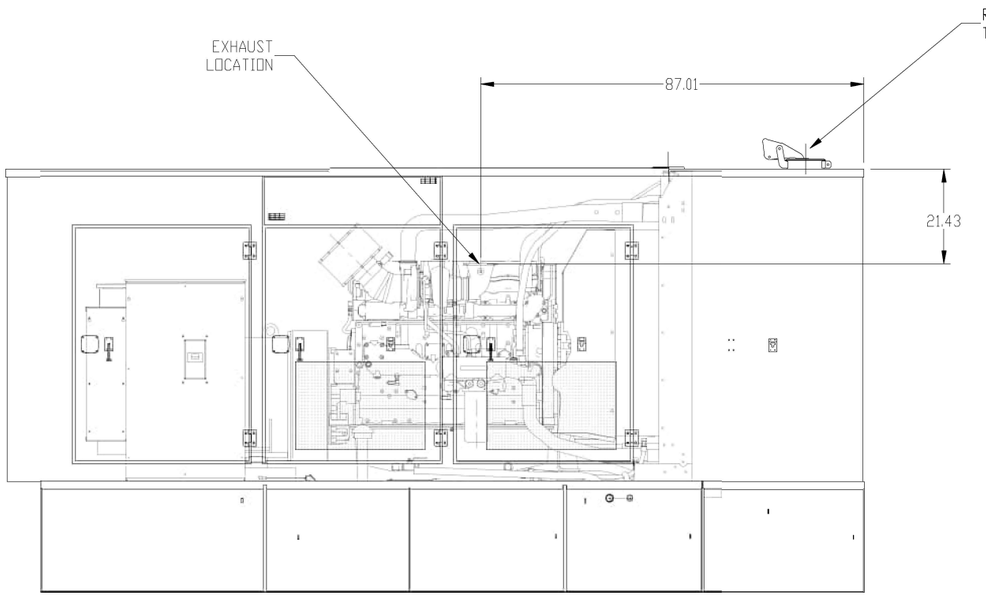

RIGHT SIDE VIEW – EXHAUST LOCATION

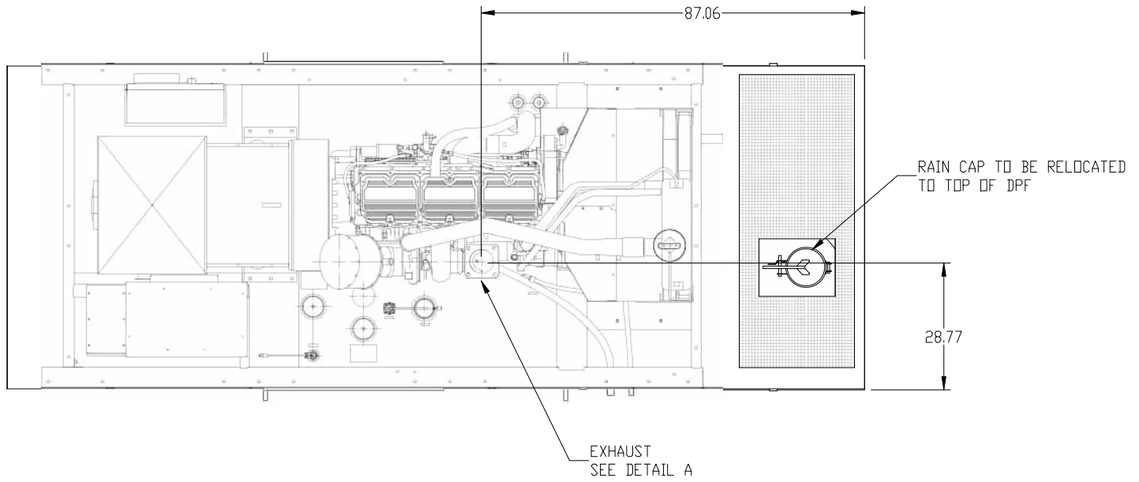

TOP VIEW – EXHAUST LOCATION

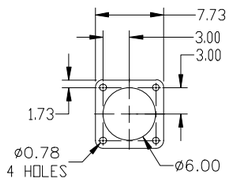

DETAIL A
SCALE 2:1

ITEM NO.	PART NO. OR SIZE	DRAWING NO.	NO. REQ'D	MATERIAL DESCRIPTION	REMARKS
3	LS-1429	449-9471	1	330 GALLON INTEGRAL TANK	CATERPILLAR
2	LS-4703	449-9471	1	LEVEL 1 SOUND ATTENUATED ENCLOSURE (WHITE)	CATERPILLAR
1	LS-1441	449-9471	1	C15 400KW, 277/480V 60HZ, 1800 RPM GENSET	CATERPILLAR

DRAWN D. URIARTE | DATE 08/08/2025

UNLESS NOTED OTHERWISE DIMENSIONS ARE IN INCHES

QUINN POWER SYSTEMS | CAT

656 E. LA CADENA DR
RIVERSIDE, CA 92507

TITLE
C15 400KW 277/480V 3-PHASE
GENERATOR SET

JOB: 240171
CITY OF REDLANDS - TEXAS BS

STOCK NO. RE16824 & RE16825
SHEET 4 OF 4

CIRCUIT DESCRIPTION TABLE Model: 6339886.DGM		
CIRCUIT #	COLOR	DESCRIPTION
16	WH	PMG_C
15	WH	PMG_B
14	WH	PMG_A
F5	BU	EXCITER 5+
F6	WH	EXCITER 6-
12	WH	AREP_12
9	WH	AREP_9
10	WH	AREP_10
11	WH	AREP_11
14	WH	PMG_A
AC199	WH	AC NEUTRAL
AC200	GN	CUSTOMER AC GROUND
AC704	WH	RLY TO HTR L1
AC705	WH	RLY TO HTR L2
AC720	WH	CB-ALH L2 TO HTR
AC703	WH	ALT HTR RLY TO HTR L1
AC719	WH	CB-ALH L1 TO RLY
AC102	WH	AC LINE INPUT L2
AC101	WH	AC LINE INPUT L1
AC103	WH	CB TO RLY L1
AC104	WH	CB TO RLY L2
AC105	WH	GFCI L1
AC106	WH	GFCI L2
AC107	WH	CB TO L1
AC108	WH	POWER SUPPLY L1
AC109	WH	AC STANDARD L2
101	WH	UNFUSED BTRY (+)
103	WH	+24V BTRY (GCCP)
104	WH	+24V BTRY (ADEM)
106	WH	+24V
108	WH	+24V BTRY
148	WH	+24V BTRY
154	WH	POWER SUPPLY
200	WH	GROUND
203	WH	-24V BTRY (GCCP)
206	WH	-24V BTRY
229	WH	CLEAN GROUND
C249	WH	POWER SUPPLY
304	WH	ENGINE CRANK
344	WH	E-STOPS LINK 1
345	WH	E-STOPS LINK 2
347	WH	REMOTE E-STOP LINK
348	WH	REMOTE E-STOP
390	WH	ADEM KEY SWITCH
A309	WH	FUEL ENABLE
A380	SH	RS485 ANN. SHLD
E486	WH	SENSING VOLTAGE - PHASE A
E487	WH	SENSING VOLTAGE - PHASE B
E488	WH	SENSING VOLTAGE - PHASE C
E494	WH	CT SENSING - PHASE A
E495	WH	CT SENSING - PHASE B
E496	WH	CT SENSING - PHASE C
S1	WH	DROOP SENSING CT
E498	WH	CT RETURN COMMON
F409	WH	SENSING VOLTAGE NEUTRAL
S2	WH	DROOP SENSING CT RETURN
F414	WH	BUSS VOLTAGE PHASE
F415	WH	BUSS VOLTAGE PHASE
F416	WH	BUSS VOLTAGE PHASE
F430	WH	GROUND FAULT
F434	WH	GENERATOR PHASE A
F435	WH	GENERATOR PHASE B
F436	WH	GENERATOR PHASE C
F484	WH	BUSS VOLTAGE PHASE A (UNFUSED)
F485	WH	BUSS VOLTAGE PHASE B (UNFUSED)
F486	WH	BUSS VOLTAGE PHASE C (UNFUSED)

CIRCUIT DESCRIPTION TABLE Model: 6339886.DGM		
CIRCUIT #	COLOR	DESCRIPTION
G407	RD	RS486 ANN. B (+)
G408	BK	RS486 ANN. A (-)
G409	GY	RS485 ANN. REF
G410	WH	BUSS N
G488	WH	DISCRETE INPUT 1
G489	WH	DISCRETE INPUT J
G490	WH	DEDICATED ISOLATED DI-04
F536	WH	HEATER/MOTOR RELAY
F532	RD	ANLG OUT 1 (+)
F533	BK	ANLG OUT 1 (-)
F535	RD	ANLG OUT 2 (+)
F536	BK	ANLG OUT 2 (-)
F537	SH	ANLG OUT 2 SHLD
F541	SH	ANLG INP SHLD 1
F547	WH	ISOLATED I/P COMMON
F548	WH	+5V ANLG 1 SNSR SUPP
E553	WH	MOTOR
E560	WH	DISCRETE O/P M (FUEL CTRL)
A666	WH	LIGHTS +
A667	WH	LIGHTS -
A774	WH	E-STOP
A775	WH	E-STOP INPUT
E722	RD	S-SPD
E723	BK	D-SPD
L710	WH	CB UNDER VOLTAGE SIGNAL TO RLY
L729	WH	CB UNDER VOLTAGE SIGNAL TO CB
M705	GN	CAN (J1939) (-)
M706	YL	CAN (J1939) (+)
M757	SH	CAN (J1939) REF
F733	RD	ANALOG INPUT 1 (+)
F734	BK	ANALOG INPUT 1 (-)
F736	BK	ANALOG INPUT 2 (+)
F737	RD	ANALOG INPUT 3 (+)
F738	BK	ANALOG INPUT 4 (+)
X710	WH	CKT BRKR AUX CONTACT (NO)

CIRCUIT DESCRIPTION TABLE Model: 6339886.DGM		
CIRCUIT #	COLOR	DESCRIPTION
X711	WH	CKT BRKR AUX CONTACT (NC)
X712	WH	CKT BRKR OPEN
X713	WH	CKT BRKR CLOSE
B79	WH	REMOTE START
B92	GN	CAT DATA LINK (-)
B93	YL	CAT DATA LINK (+)
P856	WH	CB OPENED SIGNAL
P856	WH	CB CLOSED SIGNAL
U802	WH	MSC LINK H
U803	WH	MSC LINK L
U804	WH	MSC LINK SCR
U805	WH	ETHERNET PORT B RX-
X860	WH	STARTER MAGNETIC SWITCH CB
X861	WH	STARTER MAGNETIC SWITCH PST
X862	WH	STARTER MAGNETIC COIL (+)
F874	WH	TIMER TO SWITCH +24V
R951A	RD	DSENET A
R952A	BK	DSENET B
R953A	GY	DSENET SCR
R951	RD	RS485-1 A
R952	BK	RS485-1 B
R953	GY	RS485-1 SCR
R954	WH	DISCRETE O/P B (STR HTR)
R956	WH	DISCRETE O/P E
R957	WH	DISCRETE O/P F
R958	WH	DISCRETE O/P 5
R959	WH	DISCRETE O/P 6
R960	WH	DISCRETE O/P G
R961	WH	DISCRETE O/P H
R962	WH	DISCRETE O/P I
R963	WH	DISCRETE O/P J
R964	WH	DISCRETE O/P K
R965	WH	DISCRETE O/P L
R966	WH	DISCRETE O/P 14 (SHUNT TRIP)
Y983	WH	DI-01 (LOW COOLANT)
Y984	WH	DI-02 (FUEL LEAK)
Y987	WH	DI-05 SPARE (BTRY CHGR FAIL)
Y988	WH	DI-06 SPARE (GND FAULT)
Y990	WH	DI-07
Y997	WH	CB CLOSE RELAY
Y998	WH	CB TRIP RELAY

SYMBOL	DESCRIPTION
•	BLADE, SPADE, RING, OR SCREW TERMINAL
➡	CIRCUIT CONNECTED
+	CIRCUIT NOT CONNECTED
⏚	EARTH GROUND
➡➡	CONNECTOR
—	ATCH WIRE, CABLE & COMPONENT
CBL-XXX	
⟨⟩	MULTI-CONDUCTOR CABLE
⇕	NORMALLY CLOSED CIRCUIT
⇕	NORMALLY OPEN CIRCUIT
—⁄	CIRCUIT BREAK

ABBREV	COLOR
RD	RED
WH	WHITE
OR	ORANGE
YL	YELLOW
CL	CLEAR
BK	BLACK
GY	GRAY
CU	COPPER
BR	BROWN
GN	GREEN
BU	BLUE
GN_YL	GREEN/YELLOW
VI	VIOLET
BK_WH	BLACK/WHITE

METRIC 6339886

INDEX TABLE	
SHEET INDEX	DESCRIPTION
1	CROSS REF, SHEET INDEX & NOTES
2	COMPONENT LAYOUT
3	CUSTOMER CONNECTION
4	AC - WIRING
5	INPUT/OUTPUT - WIRING-1
6	INPUT/OUTPUT - WIRING-2
7	ENGINE INTERFACE - WIRING
8	COMMUNICATION - WIRING
9	CIRCUIT BREAKER CONTROL WIRING ILLUSTRATION
10	DC/CIRCUIT BREAKER WIRING
11	OPTIONAL AC/SHORE POWER WIRING C15 & C18
12	OPTIONAL - GROUND FAULT & REMOTE ANNUNCIATOR
13	OPTIONAL- TELEMATICS & PUMP STYLE JWH
14	COLD WEATHER OPTIONAL-C9 & C13
15	COLD WEATHER OPTIONAL-C15 & C18

HARNESS DESCRIPTION TABLE		
IDENT	PART NUMBER	DESCRIPTION
AN	626-7464	RS485 ANNUNCIATOR HARNESS
AV	635-0397	VOLTAGE BIAS OPTION HARNESS
CA	522-8965	MOTORIZED DAMPERS HARNESS - C13 & C9
CH	522-8970	MOTORIZED DAMPERS HARNESS - C15 & C18
CT	535-8224	DROOP CT HARNESS
EE	390-9186	ELECTRONIC CIRCUIT BREAKER HARNESS
EM	634-3053	1250/PHASE JUMPER HARNESS
EN	390-7195	ENGINE INTERFACE HARNESS
ER	390-9015	BATTERY CHARGER HARNESS
ET	624-7739	ENCLOSURE E-STOP HARNESS
FL	390-9200	FUEL TANK OPTIONS HARNESS
GR	389-9284	GEN ALARM RELAYS HARNESS
JW	389-9288	JACKET WATER HEATER
PG	443-3837	A/V WIRING HARNESS
PL	633-3650	GCCP 1.5 HARNESS
RA	N/A	REMOTE ANNUNCIATOR REPRESENTATION
VA	390-9216	AC SENSING HARNESS
VE	390-9188	AC SENSING HARNESS (BUS)
VS	634-3207	1250/1600 VOLT SENSING HARNESS

WIRE NAME DEFINITION:
XXXX-XX# XX-XX-XX-UL
- WIRE GAUGE
- WIRE COLOR
- WIRE NUMBER
- HARNESS IDENT
- CIRCUIT IDENT

NOTE A: REMOVE AND DISCARD THIS JUMPER WHEN INSTALLING REMOTE E-STOP OPTION. REPLACE WITH REMOTE E-STOP WIRES.

NOTE B: RELOCATE TERMINATING RESISTOR FROM TERMINAL STRIP TO FURTHEST REMOTE ANNUNCIATOR OR REMOTE I/O MODULE TO EXTEND ACCESSARY DATA LINK TO ADD REMOTE ANNUNCIATOR(S) AND REMOTE I/O MODULES

NOTE C: REMOVE AND DISCARD THIS JUMPER WHEN INSTALLING ENCLOSURE E-STOP. REPLACE WITH ENCLOSURE E-STOP WIRES.

NOTE D. AVAILABLE ONLY ON 800 A ELECTRONIC CIRCUIT BREAKER

NOTE E: AVAILABLE ONLY ON 1200 A ELECTRONIC CIRCUIT BREAKER

NOTE F: TERMINAL BLOCKS LOCATED AT TOP OF CIRCUIT BREAKER

NOTE G: USED FOR 800 A ELECTRICALLY OPERATED BREAKER. FOR 1200 A ELECTRICALLY OPERATED BREAKER, THE WIRES LAND DIRECTLY TO THE BREAKER TERMINALS

NOTE H: SUPPLY APPROPRIATE VOLTAGE AND SIZE THE WIRE AWG ACCORDINGLY

CROSS REF, SHEET INDEX & NOTES

REVISIONS		
LTR		

1E5167A	INT-PROP
1E2722F	DRAWING
1ED198W	BRAND MARKINGS
1ED013Y	CONFIDENTIALITY
1ED012A	INTERPRETATION
1E0011	INTPR & TOL

Caterpillar: Confidential Yellow

PROD. | OTHER RECORDS

UNLESS OTHERWISE SPECIFIED DIMENSIONS ARE IN mm DIMENSIONS A/D TOL ARE BASIC

VENDOR TYPE: PRIMARY X SECONDARY

THIRD ANGLE PROJECTION

SHEET 1 OF 15

ENG GENERAL W973

CATERPILLAR

DIAGRAM-WIRING (GCCP1.5)

6339886 | DOC — | DWG 01 | E

METRIC 6339886

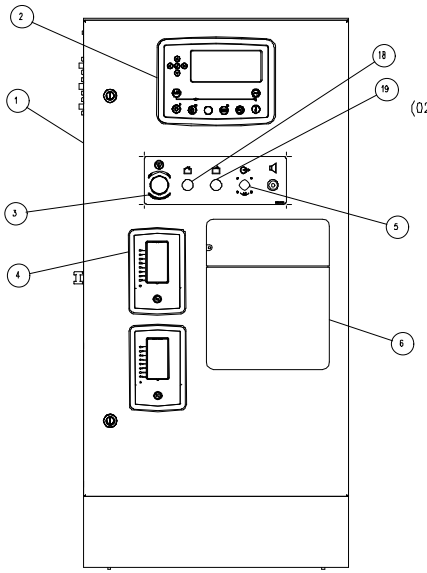

CONTROL PANEL
FRONT VIEW

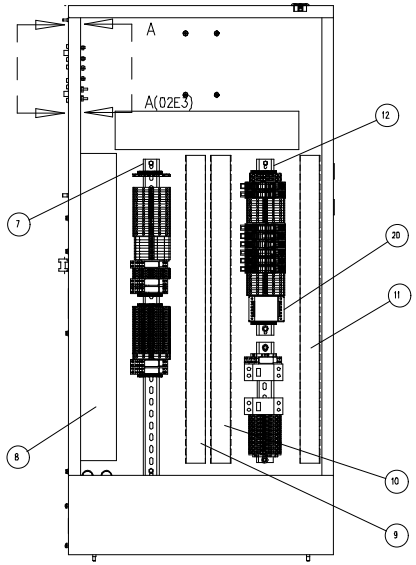

CONTROL PANEL
INSIDE VIEW

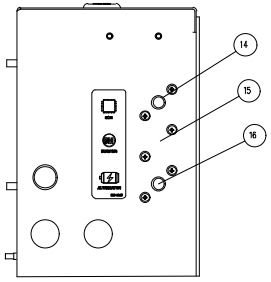

VIEW A–A
(DC–POWER DISTRIBUTION)
(CIRCUIT BREAKERS)
(02E5)

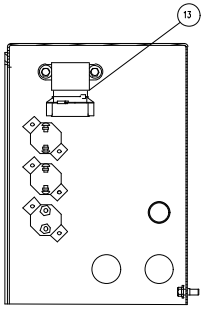

VIEW B–B
(DC–POWER DISTRIBUTION)
(CIRCUIT BREAKERS)
(02E6)

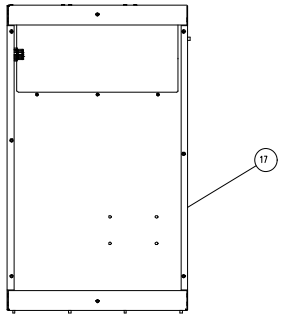

BREAKER BOX

1 GCCP 1.5 CONTROL PANEL
2 GCCP 1.5 CONTROLLER
3 ESTOP PUSH BUTTON
4 RS485 ANNUNCIATOR (OPTIONAL)
5 SERVICE TOOL CONNECTOR
6 DOCUMENT HOLDER
7 LOW ENERGY TERMINAL STRIP (DI,DO,RO,AI)
8 LOW ENERGY–DC CONTROL PANEL WIRING DUCT
9 LOW ENERGY–DC CUSTOMER WIRING DUCT
10 HIGH ENERGY AC/DC CUSTOMER CONNECTION DUCT
11 HIGH ENERGY AC/DC CONTROL PANEL WIRING DUCT
12 HIGH ENERGY TERMINAL AC/DC STRIP
13 SMMS RELAY
14 CIRCUIT BREAKER–ECM
15 CIRCUIT BREAKER–STARTER
16 CIRCUIT BREAKER–ALTERNATOR
17 BREAKER BOX
18 CIRCUIT BREAKER OPEN PUSH BUTTON
19 CIRCUIT BREAKER CLOSE PUSH BUTTON
20 OPTIONAL GROUND FAULT RELAY

FOR NOTES SEE SHEET 1
COMPONENT LAYOUT

	1E5167A	INT–PROP
	1E2722F	DRAWING
	1E0198W	BRAND MARKINGS
	1E0013Y	CONFIDENTIALITY
	1E0012A	INTERPRETATION
	1E0011	INTPR & TOL
	Caterpillar: Confidential Yellow	

PROD. OTHER RECORDS
UNLESS OTHERWISE SPECIFIED DIMENSIONS ARE IN mm DIMENSIONS A/D TOL ARE BASIC
VERSION TYPE PRIMARY X SECONDARY
THIRD ANGLE PROJECTION
SHEET 2 OF 15
SIZE A DRAWING W973

CATERPILLAR

DIAGRAM–WIRING
(GCCP1.5)
6339886 DASH – SHEET 01 E

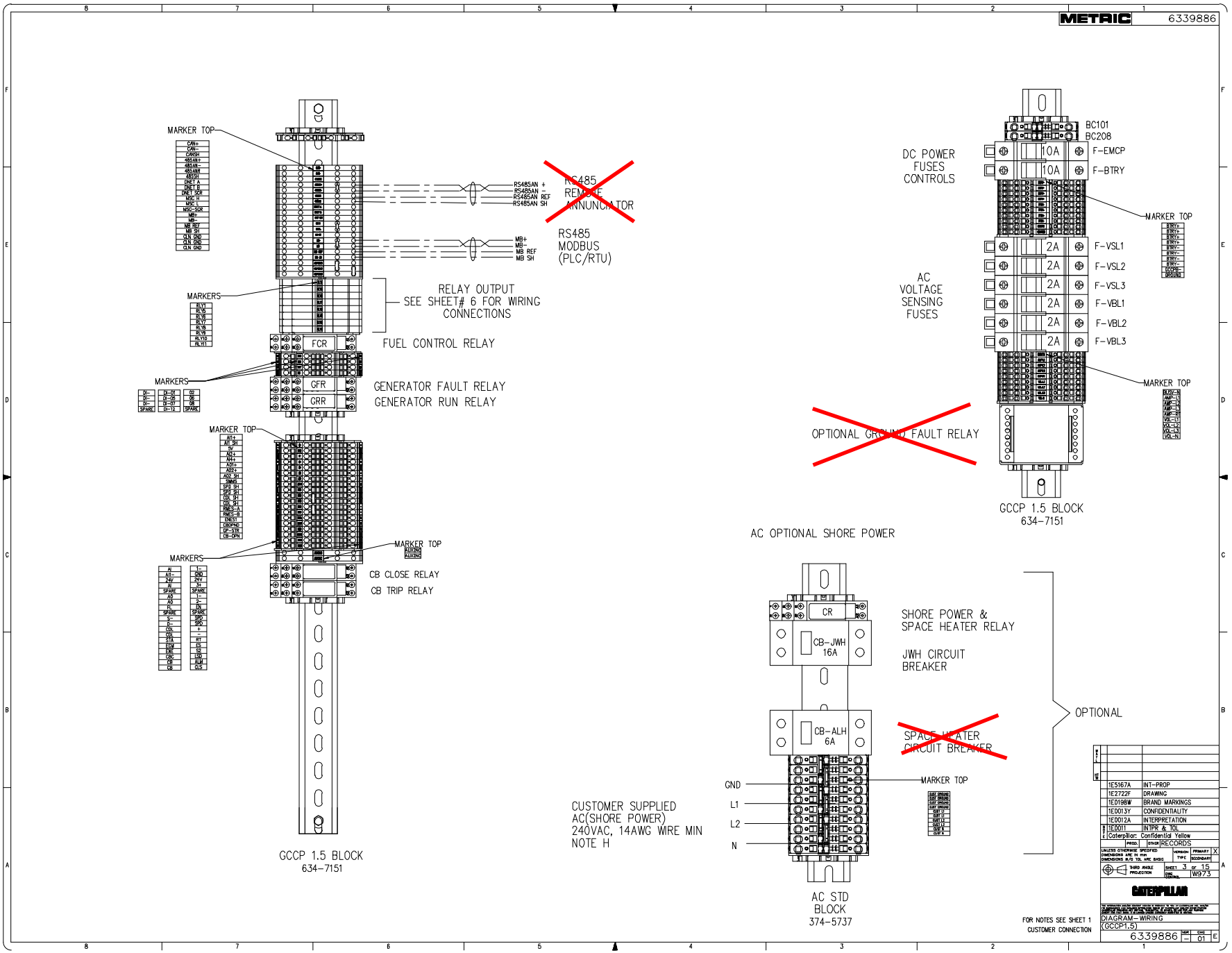
METRIC
6339886
MARKER TOP
RS485 REMOTE ANNUNCIATOR
RS485 MODBUS (PLC/RTU)
MARKERS
RELAY OUTPUT
SEE SHEET# 6 FOR WIRING CONNECTIONS
FCR
FUEL CONTROL RELAY
GFR
GENERATOR FAULT RELAY
GRR
GENERATOR RUN RELAY
CB CLOSE RELAY
CB TRIP RELAY
GCCP 1.5 BLOCK
634-7151
DC POWER FUSES CONTROLS
BC101
BC208
10A
F-EMCP
10A
F-BTRY
2A
F-VSL1
2A
F-VSL2
2A
F-VSL3
2A
F-VBL1
2A
F-VBL2
2A
F-VBL3
AC VOLTAGE SENSING FUSES
OPTIONAL GROUND FAULT RELAY
GCCP 1.5 BLOCK
634-7151
AC OPTIONAL SHORE POWER
CR
SHORE POWER & SPACE HEATER RELAY
CB-JWH 16A
JWH CIRCUIT BREAKER
CB-ALH 6A
SPACE HEATER CIRCUIT BREAKER
OPTIONAL
GND
L1
L2
N
CUSTOMER SUPPLIED AC(SHORE POWER) 240VAC, 14AWG WIRE MIN NOTE H
AC STD BLOCK 374-5737
FOR NOTES SEE SHEET 1
CUSTOMER CONNECTION
1E5167A INT-PROP
1E2722F DRAWING
1ED198W BRAND MARKINGS
1ED013Y CONFIDENTIALITY
1ED012A INTERPRETATION
1E0011 INTPR & TOL
Caterpillar: Confidential Yellow
RECORDS
THIRD ANGLE PROJECTION
SHEET 3 OF 15
W973
CATERPILLAR
DIAGRAM-WIRING
(GCCP1.5)
6339886
01

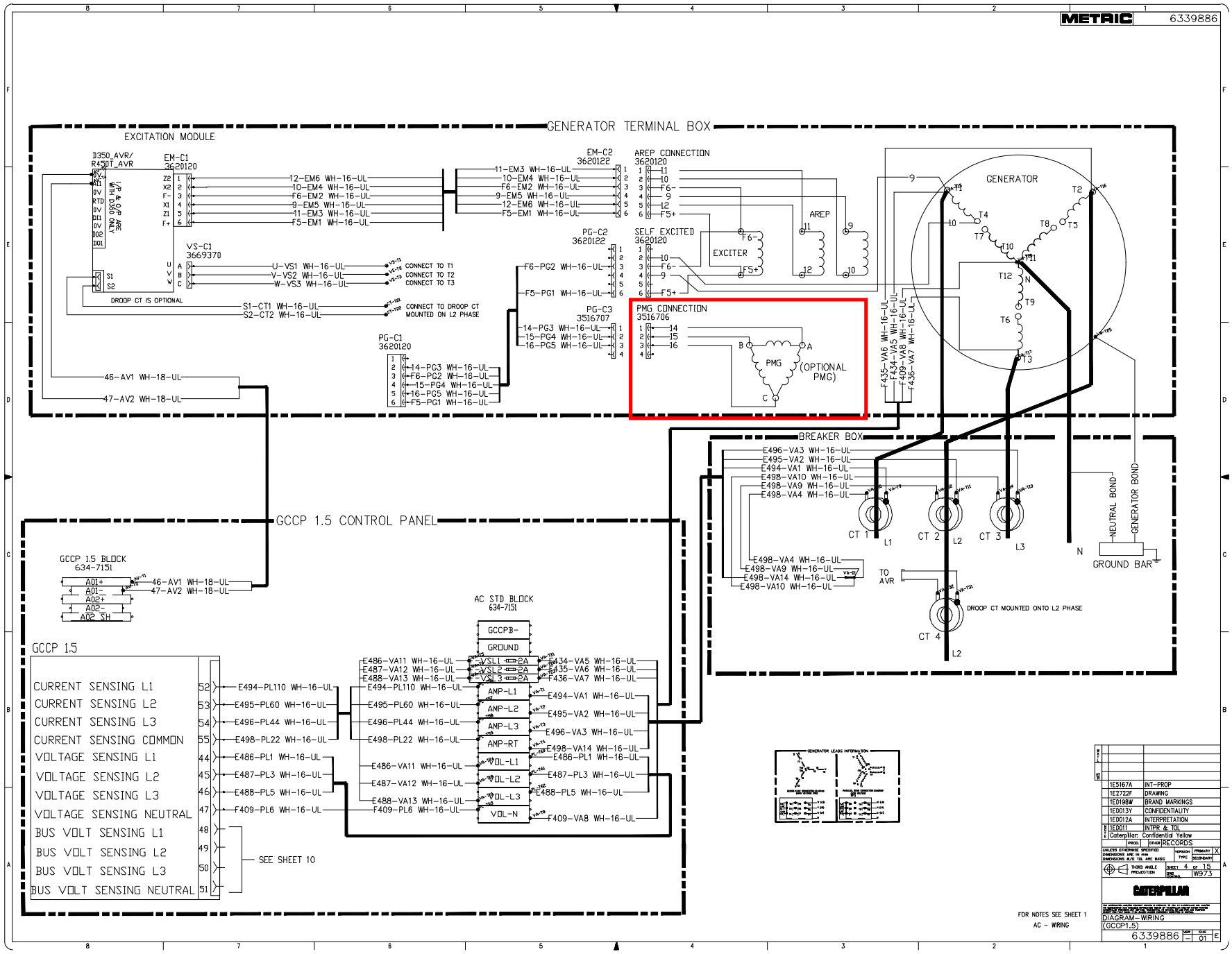
METRIC
6339886
GENERATOR TERMINAL BOX
EXCITATION MODULE
D350_AVR/
R450T_AVR
EM-C1
3620120
EM-C2
3620122
AREP CONNECTION
3620120
GENERATOR
AREP
EXCITER
SELF EXCITED
3620120
VS-C1
3669370
DROOP CT IS OPTIONAL
CONNECT TO T1
CONNECT TO T2
CONNECT TO T3
CONNECT TO DROOP CT
MOUNTED ON L2 PHASE
PG-C1
3620120
PG-C2
3620122
PG-C3
3516707
PMG CONNECTION
3516706
PMG
(OPTIONAL
PMG)
46-AV1 WH-18-UL
47-AV2 WH-18-UL
BREAKER BOX
CT 1
CT 2
CT 3
CT 4
L1
L2
L3
N
NEUTRAL BOND
GENERATOR BOND
GROUND BAR
TO
AVR
DROOP CT MOUNTED ONTO L2 PHASE
GCCP 1.5 CONTROL PANEL
GCCP 1.5 BLOCK
634-7151
AC STD BLOCK
634-7151
GCCP 1.5
CURRENT SENSING L1
CURRENT SENSING L2
CURRENT SENSING L3
CURRENT SENSING COMMON
VOLTAGE SENSING L1
VOLTAGE SENSING L2
VOLTAGE SENSING L3
VOLTAGE SENSING NEUTRAL
BUS VOLT SENSING L1
BUS VOLT SENSING L2
BUS VOLT SENSING L3
BUS VOLT SENSING NEUTRAL
SEE SHEET 10
AMP-L1
AMP-L2
AMP-L3
AMP-RT
VOL-L1
VOL-L2
VOL-L3
VOL-N
GCCPB-
GROUND
FOR NOTES SEE SHEET 1
AC - WIRING
DIAGRAM-WIRING
(GCCP1.5)
6339886
SHEET 4 OF 15
W973
CATERPILLAR

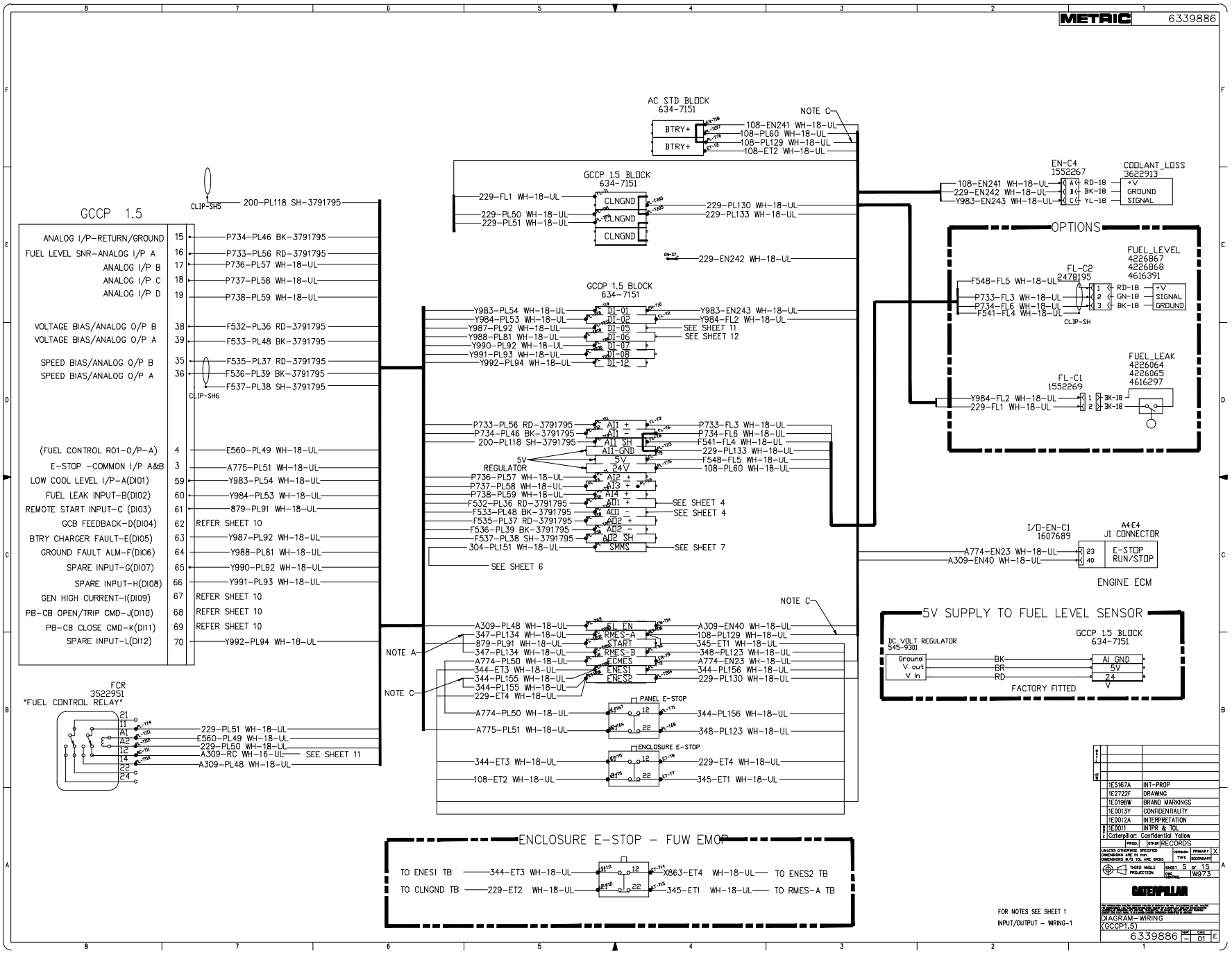
METRIC 6339886
GCCP 1.5
ANALOG I/P-RETURN/GROUND 15 P734-PL46 BK-3791795
FUEL LEVEL SNR-ANALOG I/P A 16 P733-PL56 RD-3791795
ANALOG I/P B 17 P736-PL57 WH-18-UL
ANALOG I/P C 18 P737-PL58 WH-18-UL
ANALOG I/P D 19 P738-PL59 WH-18-UL
VOLTAGE BIAS/ANALOG O/P B 38 F532-PL36 RD-3791795
VOLTAGE BIAS/ANALOG O/P A 39 F533-PL48 BK-3791795
SPEED BIAS/ANALOG O/P B 35 F535-PL37 RD-3791795
SPEED BIAS/ANALOG O/P A 36 F536-PL39 BK-3791795
F537-PL38 SH-3791795
(FUEL CONTROL RO1-O/P-A) 4 E560-PL49 WH-18-UL
E-STOP -COMMON I/P A&B 3 A775-PL51 WH-18-UL
LOW COOL LEVEL I/P-A(DI01) 59 Y983-PL54 WH-18-UL
FUEL LEAK INPUT-B(DI02) 60 Y984-PL53 WH-18-UL
REMOTE START INPUT-C (DI03) 61 879-PL91 WH-18-UL
GCB FEEDBACK-D(DI04) 62 REFER SHEET 10
BTRY CHARGER FAULT-E(DI05) 63 Y987-PL92 WH-18-UL
GROUND FAULT ALM-F(DI06) 64 Y988-PL81 WH-18-UL
SPARE INPUT-G(DI07) 65 Y990-PL92 WH-18-UL
SPARE INPUT-H(DI08) 66 Y991-PL93 WH-18-UL
GEN HIGH CURRENT-I(DI09) 67 REFER SHEET 10
PB-CB OPEN/TRIP CMD-J(DI10) 68 REFER SHEET 10
PB-CB CLOSE CMD-K(DI11) 69 REFER SHEET 10
SPARE INPUT-L(DI12) 70 Y992-PL94 WH-18-UL
CLIP-SH5 200-PL118 SH-3791795
CLIP-SH6
FCR 3522951 "FUEL CONTROL RELAY"
229-PL51 WH-18-UL
E560-PL49 WH-18-UL
229-PL50 WH-18-UL
A309-RC WH-16-UL SEE SHEET 11
A309-PL48 WH-18-UL
AC STD BLOCK 634-7151
NOTE C
BTRY+ 108-EN241 WH-18-UL
108-PL60 WH-18-UL
108-PL129 WH-18-UL
108-ET2 WH-18-UL
GCCP 1.5 BLOCK 634-7151
229-FL1 WH-18-UL
229-PL50 WH-18-UL
229-PL51 WH-18-UL
CLNGND
229-PL130 WH-18-UL
229-PL133 WH-18-UL
229-EN242 WH-18-UL
GCCP 1.5 BLOCK 634-7151
Y983-PL54 WH-18-UL DI-01 Y983-EN243 WH-18-UL
Y984-PL53 WH-18-UL DI-02 Y984-FL2 WH-18-UL
Y987-PL92 WH-18-UL DI-05 SEE SHEET 11
Y988-PL81 WH-18-UL DI-06 SEE SHEET 12
Y990-PL92 WH-18-UL DI-07
Y991-PL93 WH-18-UL DI-08
Y992-PL94 WH-18-UL DI-12
P733-PL56 RD-3791795 AI1 + P733-FL3 WH-18-UL
P734-PL46 BK-3791795 AI1 - P734-FL6 WH-18-UL
200-PL118 SH-3791795 AI1 SH F541-FL4 WH-18-UL
AI1-GND 229-PL133 WH-18-UL
5V F548-FL5 WH-18-UL
REGULATOR 24V 108-PL60 WH-18-UL
P736-PL57 WH-18-UL AI2 +
P737-PL58 WH-18-UL AI3 +
P738-PL59 WH-18-UL AI4 +
F532-PL36 RD-3791795 AO1 + SEE SHEET 4
F533-PL48 BK-3791795 AO1 - SEE SHEET 4
F535-PL37 RD-3791795 AO2 +
F536-PL39 BK-3791795 AO2 -
F537-PL38 SH-3791795 AI2 SH
304-PL151 WH-18-UL SMMS SEE SHEET 7
SEE SHEET 6
NOTE C
NOTE A
NOTE C
A309-PL48 WH-18-UL BL EN A309-EN40 WH-18-UL
347-PL134 WH-18-UL RMES-A 108-PL129 WH-18-UL
879-PL91 WH-18-UL START 345-ET1 WH-18-UL
347-PL134 WH-18-UL RMES-B 348-PL123 WH-18-UL
A774-PL50 WH-18-UL CMES A774-EN23 WH-18-UL
344-ET3 WH-18-UL ENES1 344-PL156 WH-18-UL
344-PL155 WH-18-UL ENES2 229-PL130 WH-18-UL
344-PL155 WH-18-UL
229-ET4 WH-18-UL
PANEL E-STOP
A774-PL50 WH-18-UL 344-PL156 WH-18-UL
A775-PL51 WH-18-UL 348-PL123 WH-18-UL
ENCLOSURE E-STOP
344-ET3 WH-18-UL 229-ET4 WH-18-UL
108-ET2 WH-18-UL 345-ET1 WH-18-UL
ENCLOSURE E-STOP - FUW EMOP
TO ENES1 TB 344-ET3 WH-18-UL X863-ET4 WH-18-UL TO ENES2 TB
TO CLNGND TB 229-ET2 WH-18-UL 345-ET1 WH-18-UL TO RMES-A TB
EN-C4 1552267
COOLANT_LOSS 3622913
108-EN241 WH-18-UL A +V RD-18 +V
229-EN242 WH-18-UL B BK-18 GROUND
Y983-EN243 WH-18-UL C YL-18 SIGNAL
OPTIONS
FUEL_LEVEL 4226867 4226868 4616391
FL-C2 2478195
F548-FL5 WH-18-UL 1 RD-18 +V
P733-FL3 WH-18-UL 2 GN-18 SIGNAL
P734-FL6 WH-18-UL 3 BK-18 GROUND
F541-FL4 WH-18-UL
CLIP-SH
FUEL_LEAK 4226064 4226065 4616297
FL-C1 1552269
Y984-FL2 WH-18-UL 1 BK-18
229-FL1 WH-18-UL 2 BK-18
I/O-EN-C1 1607689
A4-E4 J1 CONNECTOR
A774-EN23 WH-18-UL 23 E-STOP
A309-EN40 WH-18-UL 40 RUN/STOP
ENGINE ECM
5V SUPPLY TO FUEL LEVEL SENSOR
IC VOLT REGULATOR 545-9301
Ground BK AI_GND
V out BR 5V
V in RD 24 V
FACTORY FITTED
GCCP 1.5 BLOCK 634-7151
FOR NOTES SEE SHEET 1
INPUT/OUTPUT - WIRING-1
1E5167A INT-PROP
1E2722F DRAWING
1E0198W BRAND MARKINGS
1E0013Y CONFIDENTIALITY
1E0012A INTERPRETATION
1E0011 INTPR & TOL
Caterpillar: Confidential Yellow
RECORDS
THIRD ANGLE PROJECTION
SHEET 5 OF 15
W973
CATERPILLAR
DIAGRAM-WIRING (GCCP1.5)
6339886 SHT 01 E

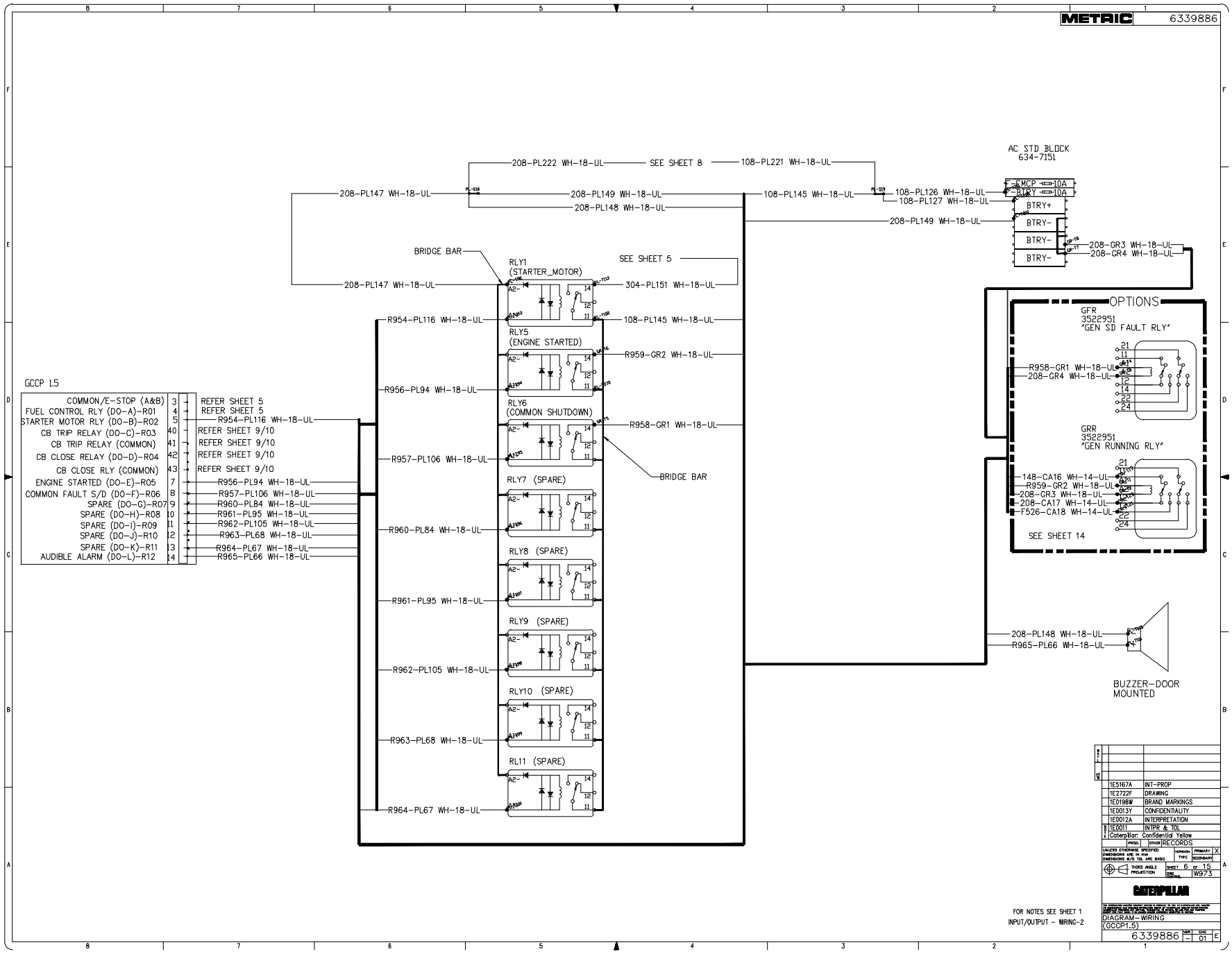
METRIC
6339886
AC STD BLOCK
634-7151
208-PL222 WH-18-UL
SEE SHEET 8
108-PL221 WH-18-UL
208-PL147 WH-18-UL
208-PL149 WH-18-UL
208-PL148 WH-18-UL
108-PL145 WH-18-UL
108-PL126 WH-18-UL
108-PL127 WH-18-UL
208-PL149 WH-18-UL
BTRY+
BTRY-
208-GR3 WH-18-UL
208-GR4 WH-18-UL
BRIDGE BAR
SEE SHEET 5
RLY1
(STARTER_MOTOR)
304-PL151 WH-18-UL
R954-PL116 WH-18-UL
RLY5
(ENGINE STARTED)
R959-GR2 WH-18-UL
R956-PL94 WH-18-UL
RLY6
(COMMON SHUTDOWN)
R958-GR1 WH-18-UL
R957-PL106 WH-18-UL
BRIDGE BAR
RLY7 (SPARE)
R960-PL84 WH-18-UL
RLY8 (SPARE)
R961-PL95 WH-18-UL
RLY9 (SPARE)
R962-PL105 WH-18-UL
RLY10 (SPARE)
R963-PL68 WH-18-UL
RL11 (SPARE)
R964-PL67 WH-18-UL
OPTIONS
GFR
3522951
"GEN SD FAULT RLY"
R958-GR1 WH-18-UL
208-GR4 WH-18-UL
GRR
3522951
"GEN RUNNING RLY"
148-CA16 WH-14-UL
R959-GR2 WH-18-UL
208-GR3 WH-18-UL
208-CA17 WH-14-UL
F526-CA18 WH-14-UL
SEE SHEET 14
208-PL148 WH-18-UL
R965-PL66 WH-18-UL
BUZZER-DOOR
MOUNTED
GCCP 1.5
COMMON/E-STOP (A&B) 3 REFER SHEET 5
FUEL CONTROL RLY (DO-A)-R01 4 REFER SHEET 5
STARTER MOTOR RLY (DO-B)-R02 5 R954-PL116 WH-18-UL
CB TRIP RELAY (DO-C)-R03 40 REFER SHEET 9/10
CB TRIP RELAY (COMMON) 41 REFER SHEET 9/10
CB CLOSE RELAY (DO-D)-R04 42 REFER SHEET 9/10
CB CLOSE RLY (COMMON) 43 REFER SHEET 9/10
ENGINE STARTED (DO-E)-R05 7 R956-PL94 WH-18-UL
COMMON FAULT S/D (DO-F)-R06 8 R957-PL106 WH-18-UL
SPARE (DO-G)-R07 9 R960-PL84 WH-18-UL
SPARE (DO-H)-R08 10 R961-PL95 WH-18-UL
SPARE (DO-I)-R09 11 R962-PL105 WH-18-UL
SPARE (DO-J)-R10 12 R963-PL68 WH-18-UL
SPARE (DO-K)-R11 13 R964-PL67 WH-18-UL
AUDIBLE ALARM (DO-L)-R12 14 R965-PL66 WH-18-UL
1E5167A INT-PROP
1E2722F DRAWING
1E0198W BRAND MARKINGS
1E0013Y CONFIDENTIALITY
1E0012A INTERPRETATION
1E0011 INTPR & TOL
Caterpillar: Confidential Yellow
RECORDS
SHEET 6 OF 15
W973
CATERPILLAR
FOR NOTES SEE SHEET 1
INPUT/OUTPUT - WIRING-2
DIAGRAM-WIRING
(GCCP1.5)
6339886
01

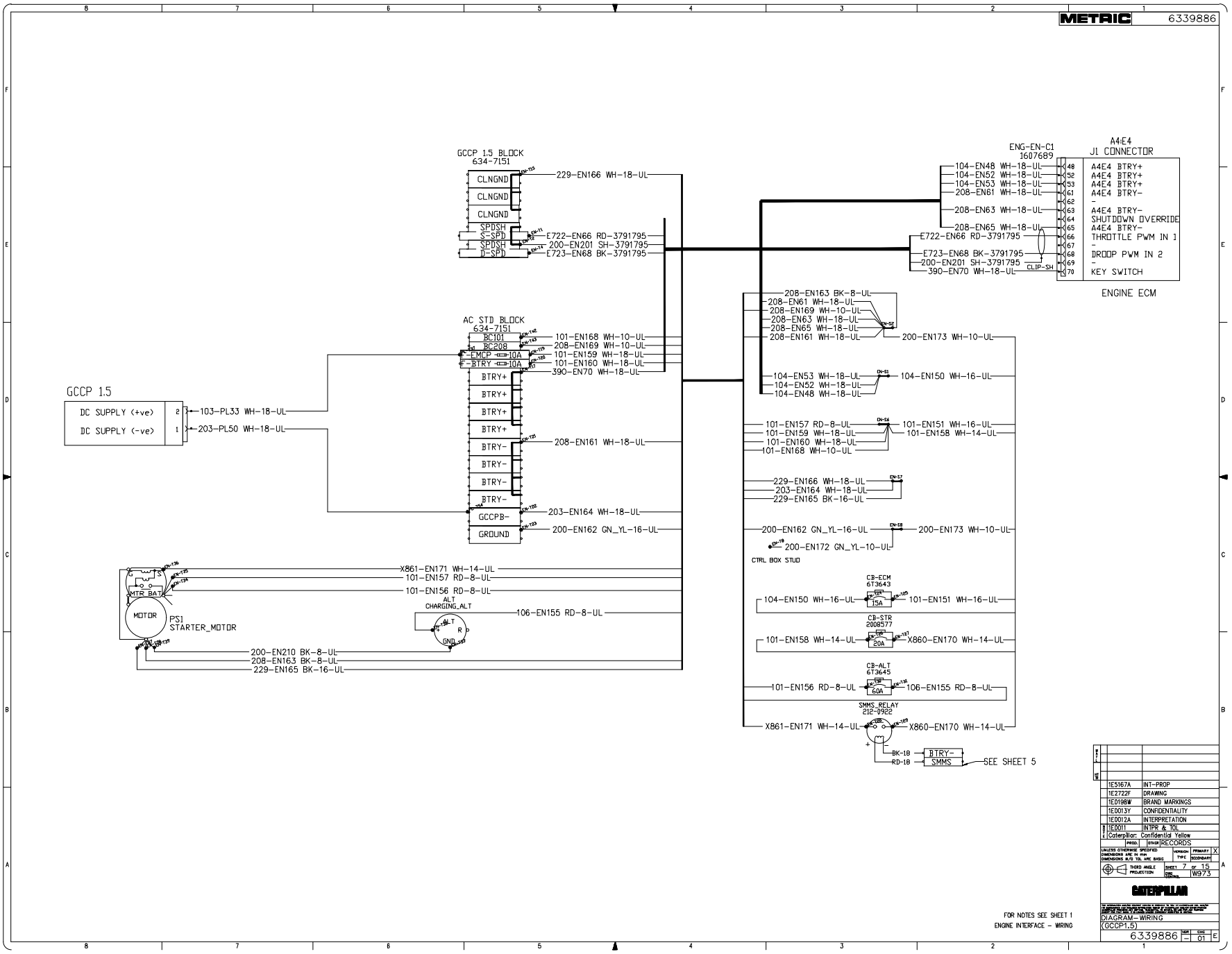
METRIC
6339886
GCCP 1.5 BLOCK
634-7151
CLNGND
CLNGND
CLNGND
SPDSH
S-SPD
SPDSH
D-SPD
229-EN166 WH-18-UL
E722-EN66 RD-3791795
200-EN201 SH-3791795
E723-EN68 BK-3791795
ENG-EN-C1
1607689
A4:E4
J1 CONNECTOR
104-EN48 WH-18-UL
104-EN52 WH-18-UL
104-EN53 WH-18-UL
208-EN61 WH-18-UL
208-EN63 WH-18-UL
208-EN65 WH-18-UL
E722-EN66 RD-3791795
E723-EN68 BK-3791795
200-EN201 SH-3791795
390-EN70 WH-18-UL
CLIP-SH
48 A4E4 BTRY+
52 A4E4 BTRY+
53 A4E4 BTRY+
61 A4E4 BTRY-
62 -
63 A4E4 BTRY-
64 SHUTDOWN OVERRIDE
65 A4E4 BTRY-
66 THROTTLE PWM IN 1
67 -
68 DROOP PWM IN 2
69 -
70 KEY SWITCH
ENGINE ECM
AC STD BLOCK
634-7151
BC101
BC208
EMCP 10A
BTRY 10A
BTRY+
BTRY+
BTRY+
BTRY+
BTRY-
BTRY-
BTRY-
BTRY-
GCCPB-
GROUND
101-EN168 WH-10-UL
208-EN169 WH-10-UL
101-EN159 WH-18-UL
101-EN160 WH-18-UL
390-EN70 WH-18-UL
208-EN161 WH-18-UL
203-EN164 WH-18-UL
200-EN162 GN_YL-16-UL
GCCP 1.5
DC SUPPLY (+ve) 2
DC SUPPLY (-ve) 1
103-PL33 WH-18-UL
203-PL50 WH-18-UL
208-EN163 BK-8-UL
208-EN61 WH-18-UL
208-EN169 WH-10-UL
208-EN63 WH-18-UL
208-EN65 WH-18-UL
208-EN161 WH-18-UL
200-EN173 WH-10-UL
104-EN53 WH-18-UL
104-EN52 WH-18-UL
104-EN48 WH-18-UL
104-EN150 WH-16-UL
101-EN157 RD-8-UL
101-EN159 WH-18-UL
101-EN160 WH-18-UL
101-EN168 WH-10-UL
101-EN151 WH-16-UL
101-EN158 WH-14-UL
229-EN166 WH-18-UL
203-EN164 WH-18-UL
229-EN165 BK-16-UL
200-EN162 GN_YL-16-UL
200-EN173 WH-10-UL
200-EN172 GN_YL-10-UL
CTRL BOX STUD
CB-ECM
6T3643
15A
104-EN150 WH-16-UL
101-EN151 WH-16-UL
CB-STR
2008577
20A
101-EN158 WH-14-UL
X860-EN170 WH-14-UL
CB-ALT
6T3645
60A
101-EN156 RD-8-UL
106-EN155 RD-8-UL
SMMS_RELAY
212-0922
X861-EN171 WH-14-UL
X860-EN170 WH-14-UL
BK-18
RD-18
BTRY-
SMMS
SEE SHEET 5
MTR_BAT
MOTOR
PS1
STARTER_MOTOR
ALT
CHARGING_ALT
GND
X861-EN171 WH-14-UL
101-EN157 RD-8-UL
101-EN156 RD-8-UL
106-EN155 RD-8-UL
200-EN210 BK-8-UL
208-EN163 BK-8-UL
229-EN165 BK-16-UL
FOR NOTES SEE SHEET 1
ENGINE INTERFACE - WIRING
1E5167A INT-PROP
1E2722F DRAWING
1ED198W BRAND MARKINGS
1ED013Y CONFIDENTIALITY
1ED012A INTERPRETATION
1E0011 INTPR & TOL
Caterpillar: Confidential Yellow
RECORDS
UNLESS OTHERWISE SPECIFIED
DIMENSIONS ARE IN mm
DIMENSIONS A/D TOL ARE BASIC
VERSION TYPE PRIMARY X SECONDARY
THIRD ANGLE PROJECTION
SHEET 7 OF 15
SIZE A
DWG NO W973
CATERPILLAR
DIAGRAM-WIRING
(GCCP1.5)
6339886 DASH - SHEET 01 REV E

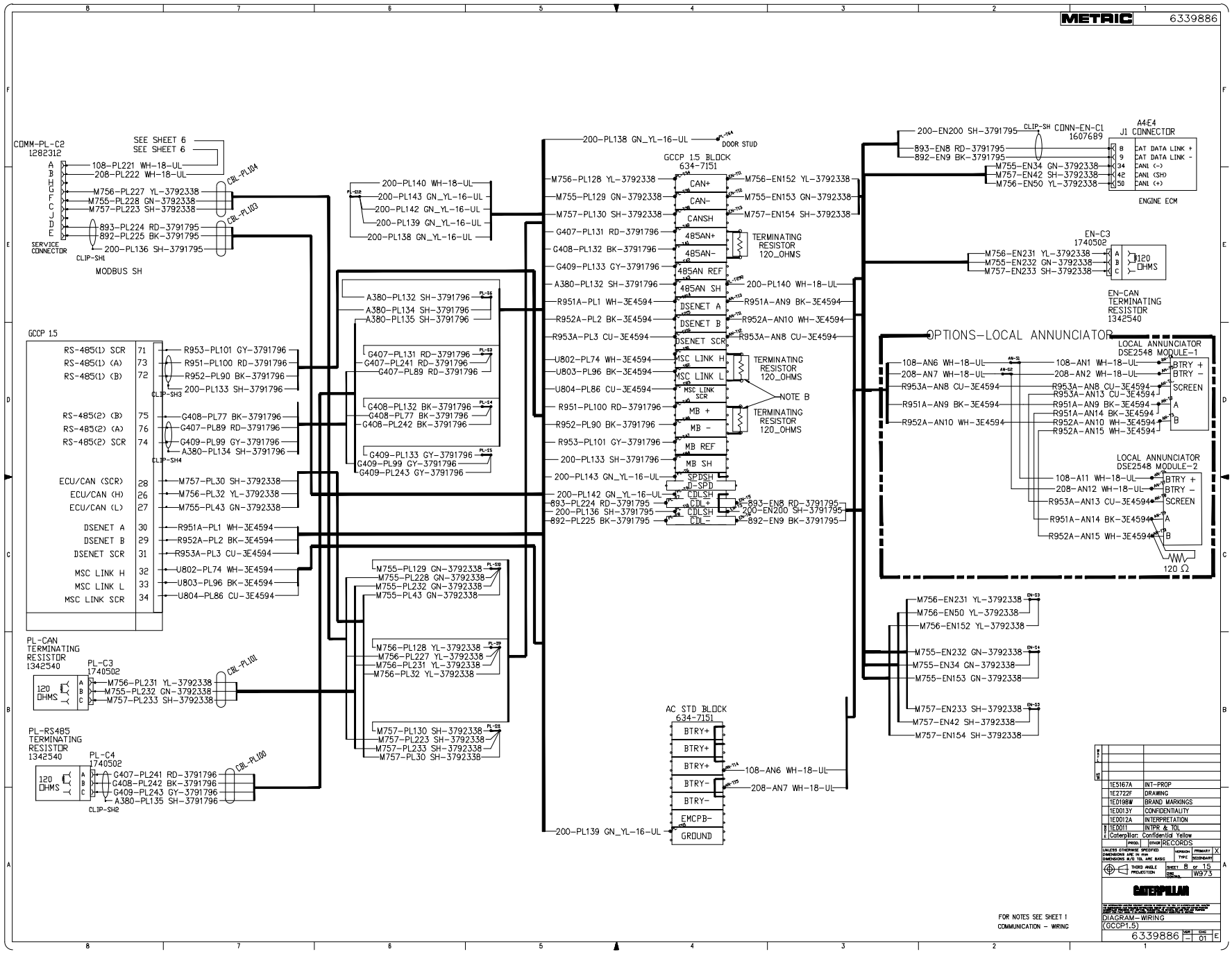
METRIC
6339886
COMM-PL-C2
1282312
SEE SHEET 6
SEE SHEET 6
108-PL221 WH-18-UL
208-PL222 WH-18-UL
M756-PL227 YL-3792338
M755-PL228 GN-3792338
M757-PL223 SH-3792338
893-PL224 RD-3791795
892-PL225 BK-3791795
200-PL136 SH-3791795
CBL-PL104
CBL-PL103
SERVICE CONNECTOR
CLIP-SH1
MODBUS SH
200-PL140 WH-18-UL
200-PL143 GN_YL-16-UL
200-PL142 GN_YL-16-UL
200-PL139 GN_YL-16-UL
200-PL138 GN_YL-16-UL
DOOR STUD
GCCP 1.5 BLOCK
634-7151
CAN+
CAN-
CANSH
485AN+
485AN-
485AN REF
485AN SH
DSENET A
DSENET B
DSENET SCR
MSC LINK H
MSC LINK L
MSC LINK SCR
MB +
MB -
MB REF
MB SH
SPDSH
J-SPD
CDLSH
CDL+
CDLSH
CDL-
M756-PL128 YL-3792338
M755-PL129 GN-3792338
M757-PL130 SH-3792338
G407-PL131 RD-3791796
G408-PL132 BK-3791796
G409-PL133 GY-3791796
A380-PL132 SH-3791796
R951A-PL1 WH-3E4594
R952A-PL2 BK-3E4594
R953A-PL3 CU-3E4594
U802-PL74 WH-3E4594
U803-PL96 BK-3E4594
U804-PL86 CU-3E4594
R951-PL100 RD-3791796
R952-PL90 BK-3791796
R953-PL101 GY-3791796
200-PL133 SH-3791796
200-PL143 GN_YL-16-UL
200-PL142 GN_YL-16-UL
893-PL224 RD-3791795
200-PL136 SH-3791795
892-PL225 BK-3791795
200-PL139 GN_YL-16-UL
M756-EN152 YL-3792338
M755-EN153 GN-3792338
M757-EN154 SH-3792338
200-PL140 WH-18-UL
R951A-AN9 BK-3E4594
R952A-AN10 WH-3E4594
R953A-AN8 CU-3E4594
TERMINATING RESISTOR 120_OHMS
NOTE B
893-EN8 RD-3791795
200-EN200 SH-3791795
892-EN9 BK-3791795
200-EN200 SH-3791795
CLIP-SH
CONN-EN-C1
1607689
A4E4
J1 CONNECTOR
B CAT DATA LINK +
9 CAT DATA LINK -
34 CANI (-)
42 CANI (SH)
50 CANI (+)
ENGINE ECM
EN-C3
1740502
M756-EN231 YL-3792338
M755-EN232 GN-3792338
M757-EN233 SH-3792338
120 OHMS
EN-CAN TERMINATING RESISTOR
1342540
OPTIONS-LOCAL ANNUNCIATOR
LOCAL ANNUNCIATOR DSE2548 MODULE-1
108-AN6 WH-18-UL
208-AN7 WH-18-UL
R953A-AN8 CU-3E4594
R951A-AN9 BK-3E4594
R952A-AN10 WH-3E4594
108-AN1 WH-18-UL
208-AN2 WH-18-UL
R953A-AN8 CU-3E4594
R953A-AN13 CU-3E4594
R951A-AN9 BK-3E4594
R951A-AN14 BK-3E4594
R952A-AN10 WH-3E4594
R952A-AN15 WH-3E4594
BTRY +
BTRY -
SCREEN
A
B
LOCAL ANNUNCIATOR DSE2548 MODULE-2
108-A11 WH-18-UL
208-AN12 WH-18-UL
R953A-AN13 CU-3E4594
R951A-AN14 BK-3E4594
R952A-AN15 WH-3E4594
120 Ω
GCCP 1.5
RS-485(1) SCR 71
RS-485(1) (A) 73
RS-485(1) (B) 72
RS-485(2) (B) 75
RS-485(2) (A) 76
RS-485(2) SCR 74
ECU/CAN (SCR) 28
ECU/CAN (H) 26
ECU/CAN (L) 27
DSENET A 30
DSENET B 29
DSENET SCR 31
MSC LINK H 32
MSC LINK L 33
MSC LINK SCR 34
CLIP-SH3
CLIP-SH4
A380-PL132 SH-3791796
A380-PL134 SH-3791796
A380-PL135 SH-3791796
G407-PL131 RD-3791796
G407-PL241 RD-3791796
G407-PL89 RD-3791796
G408-PL132 BK-3791796
G408-PL77 BK-3791796
G408-PL242 BK-3791796
G409-PL133 GY-3791796
G409-PL99 GY-3791796
G409-PL243 GY-3791796
M755-PL129 GN-3792338
M755-PL228 GN-3792338
M755-PL232 GN-3792338
M755-PL43 GN-3792338
M756-PL128 YL-3792338
M756-PL227 YL-3792338
M756-PL231 YL-3792338
M756-PL32 YL-3792338
M757-PL130 SH-3792338
M757-PL223 SH-3792338
M757-PL233 SH-3792338
M757-PL30 SH-3792338
PL-CAN TERMINATING RESISTOR
1342540
PL-C3
1740502
120 OHMS
M756-PL231 YL-3792338
M755-PL232 GN-3792338
M757-PL233 SH-3792338
CBL-PL101
PL-RS485 TERMINATING RESISTOR
1342540
PL-C4
1740502
120 OHMS
G407-PL241 RD-3791796
G408-PL242 BK-3791796
G409-PL243 GY-3791796
A380-PL135 SH-3791796
CBL-PL100
CLIP-SH2
AC STD BLOCK
634-7151
BTRY+
BTRY+
BTRY+
BTRY-
BTRY-
EMCPB-
GROUND
108-AN6 WH-18-UL
208-AN7 WH-18-UL
M756-EN231 YL-3792338
M756-EN50 YL-3792338
M756-EN152 YL-3792338
M755-EN232 GN-3792338
M755-EN34 GN-3792338
M755-EN153 GN-3792338
M757-EN233 SH-3792338
M757-EN42 SH-3792338
M757-EN154 SH-3792338
FOR NOTES SEE SHEET 1
COMMUNICATION - WIRING
1E5167A INT-PROP
1E2722F DRAWING
1ED198W BRAND MARKINGS
1ED013Y CONFIDENTIALITY
1ED012A INTERPRETATION
1E0011 INTPR & TOL
Caterpillar: Confidential Yellow
PROD. OTHER RECORDS
UNLESS OTHERWISE SPECIFIED DIMENSIONS ARE IN mm DIMENSIONS A/D TOL ARE BASIC
VERSION TYPE PRIMARY SECONDARY
THIRD ANGLE PROJECTION
SHEET 8 OF 15
DRG NO. W973
CATERPILLAR
DIAGRAM-WIRING
(GCCP1.5)
6339886 DRG — SHT 01 E

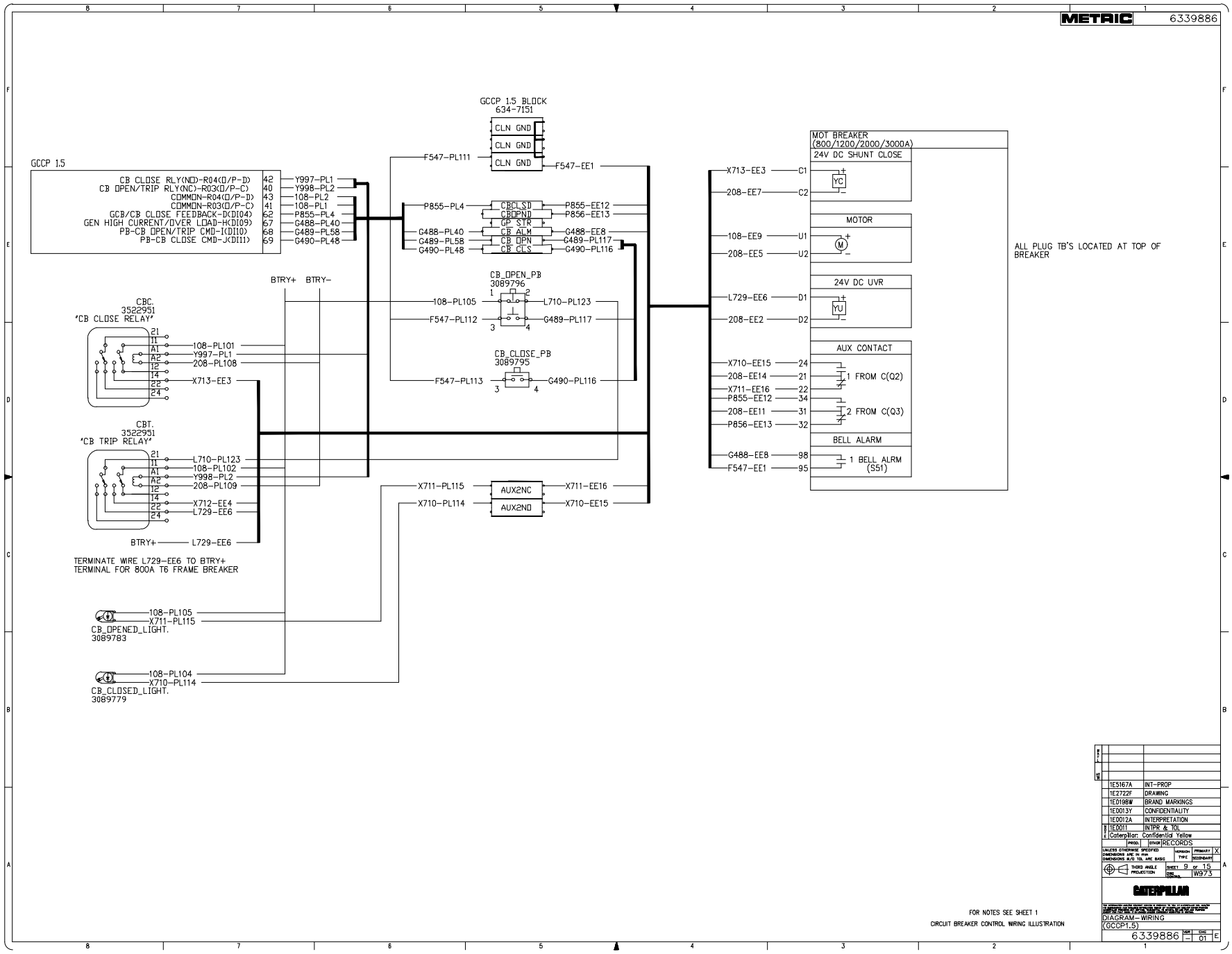
METRIC 6339886
GCCP 1.5
CB CLOSE RLY(NO)-R04(D/P-D) 42 Y997-PL1
CB OPEN/TRIP RLY(NC)-R03(D/P-C) 40 Y998-PL2
COMMON-R04(D/P-D) 43 108-PL2
COMMON-R03(D/P-C) 41 108-PL1
GCB/CB CLOSE FEEDBACK-D(DI04) 62 P855-PL4
GEN HIGH CURRENT/OVER LOAD-H(DI09) 67 G488-PL40
PB-CB OPEN/TRIP CMD-I(DI10) 68 G489-PL58
PB-CB CLOSE CMD-J(DI11) 69 G490-PL48
GCCP 1.5 BLOCK 634-7151
CLN GND
CLN GND
CLN GND
F547-PL111
F547-EE1
P855-PL4
CBCLSD
CBOPND
GP STR
P855-EE12
P856-EE13
G488-PL40
G489-PL58
G490-PL48
CB ALM
CB OPN
CB CLS
G488-EE8
G489-PL117
G490-PL116
BTRY+
BTRY-
CBC. 3522951 "CB CLOSE RELAY"
21
11
A1
A2
12
14
22
24
108-PL101
Y997-PL1
208-PL108
X713-EE3
CBT. 3522951 "CB TRIP RELAY"
L710-PL123
108-PL102
Y998-PL2
208-PL109
X712-EE4
L729-EE6
BTRY+ L729-EE6
TERMINATE WIRE L729-EE6 TO BTRY+ TERMINAL FOR 800A T6 FRAME BREAKER
CB_OPEN_PB 3089796
108-PL105
L710-PL123
F547-PL112
G489-PL117
CB_CLOSE_PB 3089795
F547-PL113
G490-PL116
X711-PL115
X710-PL114
AUX2NC
AUX2ND
X711-EE16
X710-EE15
108-PL105
X711-PL115
CB_OPENED_LIGHT. 3089783
108-PL104
X710-PL114
CB_CLOSED_LIGHT. 3089779
MOT BREAKER (800/1200/2000/3000A)
24V DC SHUNT CLOSE
X713-EE3 C1
208-EE7 C2
YC
MOTOR
108-EE9 U1
208-EE5 U2
M
24V DC UVR
L729-EE6 D1
208-EE2 D2
YU
AUX CONTACT
X710-EE15 24
208-EE14 21
1 FROM C(Q2)
X711-EE16 22
P855-EE12 34
208-EE11 31
2 FROM C(Q3)
P856-EE13 32
BELL ALARM
G488-EE8 98
F547-EE1 95
1 BELL ALRM (S51)
ALL PLUG TB'S LOCATED AT TOP OF BREAKER
FOR NOTES SEE SHEET 1
CIRCUIT BREAKER CONTROL WIRING ILLUSTRATION
1E5167A INT-PROP
1E2722F DRAWING
1E0198W BRAND MARKINGS
1E0013Y CONFIDENTIALITY
1E0012A INTERPRETATION
1E0011 INTPR & TOL
Caterpillar: Confidential Yellow
RECORDS
PRIMARY
SECONDARY
THIRD ANGLE PROJECTION
SHEET 9 OF 15
W973
CATERPILLAR
DIAGRAM-WIRING
(GCCP1.5)
6339886 - 01 E

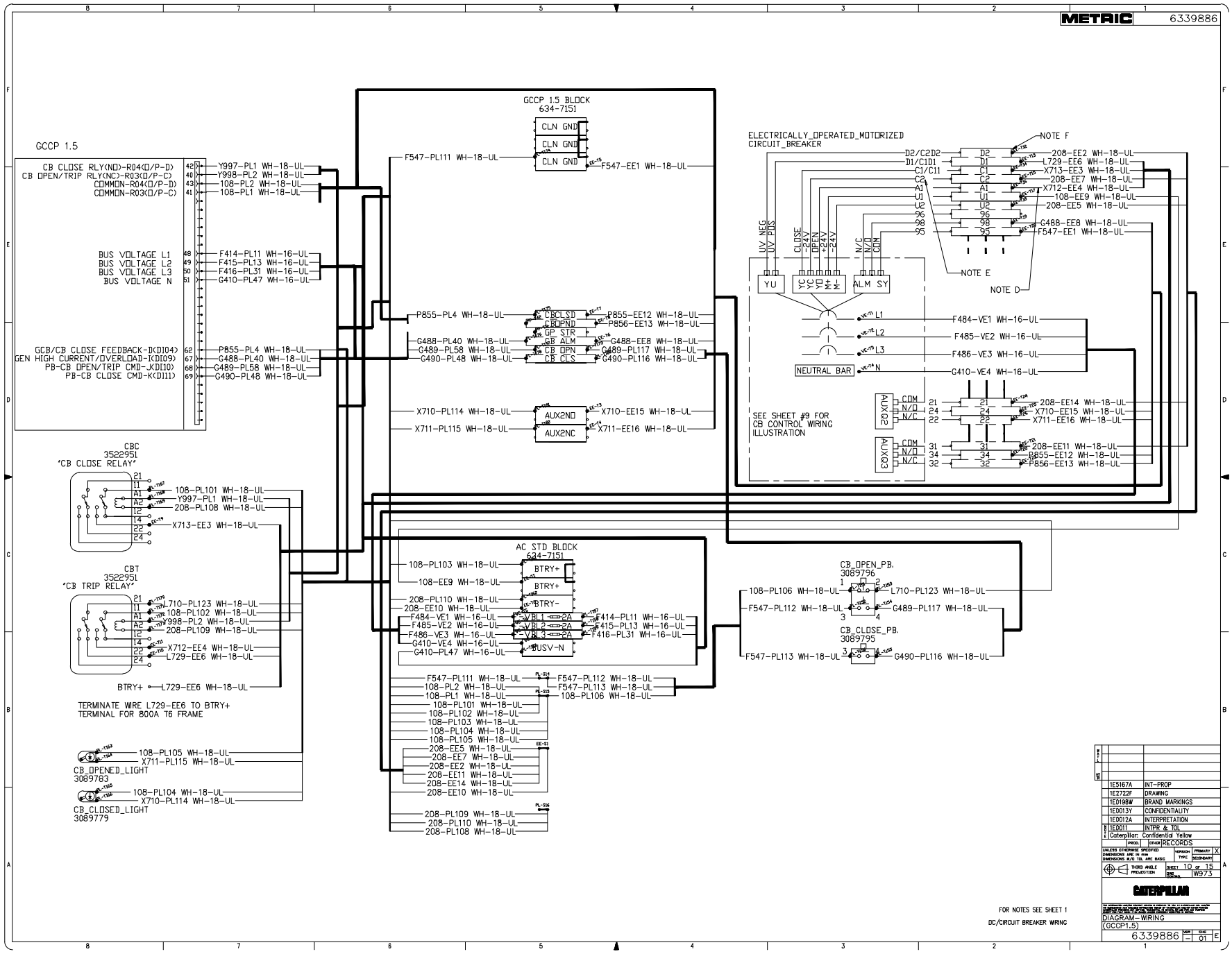
METRIC
6339886
GCCP 1.5
CB CLOSE RLY(NO)-R04(D/P-D)
CB OPEN/TRIP RLY(NC)-R03(D/P-C)
COMMON-R04(D/P-D)
COMMON-R03(D/P-C)
BUS VOLTAGE L1
BUS VOLTAGE L2
BUS VOLTAGE L3
BUS VOLTAGE N
GCB/CB CLOSE FEEDBACK-K(DI04)
GEN HIGH CURRENT/OVERLOAD-K(DI09)
PB-CB OPEN/TRIP CMD-K(DI10)
PB-CB CLOSE CMD-K(DI11)
Y997-PL1 WH-18-UL
Y998-PL2 WH-18-UL
108-PL2 WH-18-UL
108-PL1 WH-18-UL
F414-PL11 WH-16-UL
F415-PL13 WH-16-UL
F416-PL31 WH-16-UL
G410-PL47 WH-16-UL
P855-PL4 WH-18-UL
G488-PL40 WH-18-UL
G489-PL58 WH-18-UL
G490-PL48 WH-18-UL
GCCP 1.5 BLOCK
634-7151
CLN GND
F547-PL111 WH-18-UL
F547-EE1 WH-18-UL
CBCLSD
CBOPND
GP STR
CB ALM
CB OPN
CB CLS
P855-EE12 WH-18-UL
P856-EE13 WH-18-UL
G488-EE8 WH-18-UL
G489-PL117 WH-18-UL
G490-PL116 WH-18-UL
AUX2ND
AUX2NC
X710-PL114 WH-18-UL
X711-PL115 WH-18-UL
X710-EE15 WH-18-UL
X711-EE16 WH-18-UL
ELECTRICALLY_OPERATED_MOTORIZED
CIRCUIT_BREAKER
NOTE F
NOTE E
NOTE D
D2/C2D2
D1/C1D1
C1/C11
C2
A1
U1
U2
96
98
95
208-EE2 WH-18-UL
L729-EE6 WH-18-UL
X713-EE3 WH-18-UL
208-EE7 WH-18-UL
X712-EE4 WH-18-UL
108-EE9 WH-18-UL
208-EE5 WH-18-UL
G488-EE8 WH-18-UL
F547-EE1 WH-18-UL
UV NEG
UV POS
CLOSE -24V
OPEN +24V
M+
M-
N/C
N/O
COM
YU
YC
ALM SY
L1
L2
L3
N
NEUTRAL BAR
F484-VE1 WH-16-UL
F485-VE2 WH-16-UL
F486-VE3 WH-16-UL
G410-VE4 WH-16-UL
SEE SHEET #9 FOR
CB CONTROL WIRING
ILLUSTRATION
AUX2
AUX3
COM
N/O
N/C
208-EE14 WH-18-UL
X710-EE15 WH-18-UL
X711-EE16 WH-18-UL
208-EE11 WH-18-UL
P855-EE12 WH-18-UL
P856-EE13 WH-18-UL
CBC
3522951
"CB CLOSE RELAY"
108-PL101 WH-18-UL
Y997-PL1 WH-18-UL
208-PL108 WH-18-UL
X713-EE3 WH-18-UL
CBT
3522951
"CB TRIP RELAY"
X710-PL123 WH-18-UL
108-PL102 WH-18-UL
Y998-PL2 WH-18-UL
208-PL109 WH-18-UL
X712-EE4 WH-18-UL
L729-EE6 WH-18-UL
BTRY+ L729-EE6 WH-18-UL
TERMINATE WIRE L729-EE6 TO BTRY+
TERMINAL FOR 800A T6 FRAME
CB_OPENED_LIGHT
3089783
108-PL105 WH-18-UL
X711-PL115 WH-18-UL
CB_CLOSED_LIGHT
3089779
108-PL104 WH-18-UL
X710-PL114 WH-18-UL
AC STD BLOCK
634-7151
108-PL103 WH-18-UL
108-EE9 WH-18-UL
208-PL110 WH-18-UL
208-EE10 WH-18-UL
F484-VE1 WH-16-UL
F485-VE2 WH-16-UL
F486-VE3 WH-16-UL
G410-VE4 WH-16-UL
G410-PL47 WH-16-UL
BTRY+
BTRY+
BTRY-
VBL1 2A
VBL2 2A
VBL3 2A
BUSV-N
F414-PL11 WH-16-UL
F415-PL13 WH-16-UL
F416-PL31 WH-16-UL
F547-PL111 WH-18-UL
108-PL2 WH-18-UL
108-PL1 WH-18-UL
108-PL101 WH-18-UL
108-PL102 WH-18-UL
108-PL103 WH-18-UL
108-PL104 WH-18-UL
108-PL105 WH-18-UL
208-EE5 WH-18-UL
208-EE7 WH-18-UL
208-EE2 WH-18-UL
208-EE11 WH-18-UL
208-EE14 WH-18-UL
208-EE10 WH-18-UL
208-PL109 WH-18-UL
208-PL110 WH-18-UL
208-PL108 WH-18-UL
F547-PL112 WH-18-UL
F547-PL113 WH-18-UL
108-PL106 WH-18-UL
CB_OPEN_PB.
3089796
CB_CLOSE_PB.
3089795
108-PL106 WH-18-UL
F547-PL112 WH-18-UL
F547-PL113 WH-18-UL
L710-PL123 WH-18-UL
G489-PL117 WH-18-UL
G490-PL116 WH-18-UL
FOR NOTES SEE SHEET 1
DC/CIRCUIT BREAKER WIRING
1E5167A INT-PROP
1E2722F DRAWING
1E0198W BRAND MARKINGS
1E0013Y CONFIDENTIALITY
1E0012A INTERPRETATION
1E0011 INTPR & TOL
Caterpillar: Confidential Yellow
RECORDS
UNLESS OTHERWISE SPECIFIED
DIMENSIONS ARE IN mm
DIMENSIONS A/D TOL ARE BASIC
THIRD ANGLE PROJECTION
SHEET 10 OF 15
W973
CATERPILLAR
DIAGRAM-WIRING
(GCCP1.5)
6339886
SHT 01
REV E

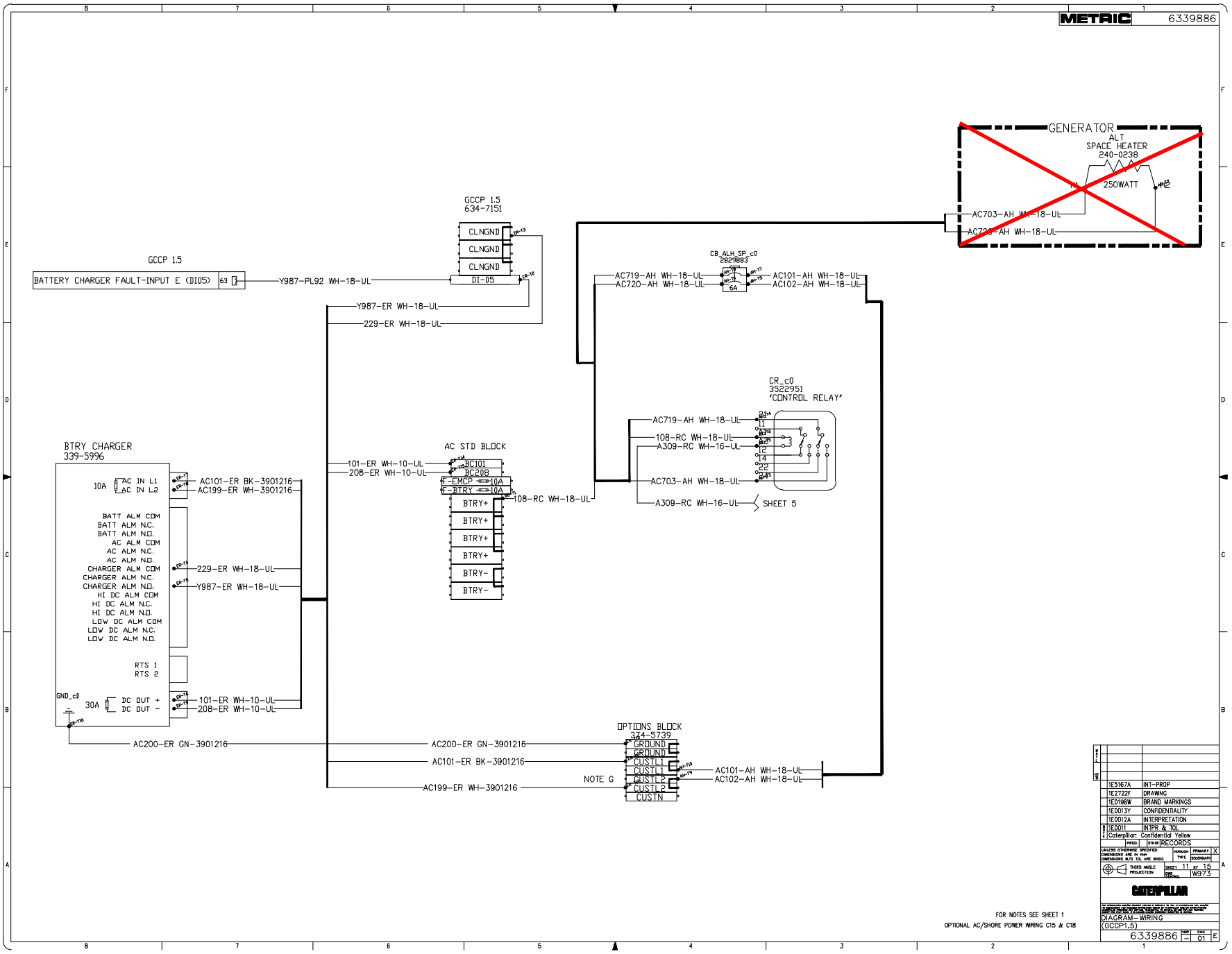
METRIC
6339886
GENERATOR
ALT
SPACE HEATER
240-0238
250WATT
AC703-AH WH-18-UL
AC720-AH WH-18-UL
GCCP 1.5
634-7151
CLNGND
CLNGND
CLNGND
DI-05
GCCP 1.5
BATTERY CHARGER FAULT-INPUT E (DI05)
63
Y987-PL92 WH-18-UL
Y987-ER WH-18-UL
229-ER WH-18-UL
CB_ALH_SP_c0
2829883
AC719-AH WH-18-UL
AC720-AH WH-18-UL
6A
AC101-AH WH-18-UL
AC102-AH WH-18-UL
CR_c0
3522951
"CONTROL RELAY"
AC719-AH WH-18-UL
108-RC WH-18-UL
A309-RC WH-16-UL
AC703-AH WH-18-UL
A309-RC WH-16-UL
SHEET 5
BTRY CHARGER
339-5996
10A
AC IN L1
AC IN L2
AC101-ER BK-3901216
AC199-ER WH-3901216
BATT ALM COM
BATT ALM N.C.
BATT ALM N.O.
AC ALM COM
AC ALM N.C.
AC ALM N.O.
CHARGER ALM COM
CHARGER ALM N.C.
CHARGER ALM N.O.
HI DC ALM COM
HI DC ALM N.C.
HI DC ALM N.O.
LOW DC ALM COM
LOW DC ALM N.C.
LOW DC ALM N.O.
229-ER WH-18-UL
Y987-ER WH-18-UL
RTS 1
RTS 2
GND_c0
30A
DC OUT +
DC OUT -
101-ER WH-10-UL
208-ER WH-10-UL
AC200-ER GN-3901216
AC STD BLOCK
101-ER WH-10-UL
208-ER WH-10-UL
BC101
BC208
EMCP 10A
BTRY 10A
BTRY+
BTRY+
BTRY+
BTRY+
BTRY-
BTRY-
108-RC WH-18-UL
OPTIONS BLOCK
374-5739
GROUND
GROUND
CUSTL1
CUSTL1
CUSTL2
CUSTL2
CUSTN
AC200-ER GN-3901216
AC101-ER BK-3901216
AC199-ER WH-3901216
NOTE G
AC101-AH WH-18-UL
AC102-AH WH-18-UL
FOR NOTES SEE SHEET 1
OPTIONAL AC/SHORE POWER WIRING C15 & C18
1E5167A INT-PROP
1E2722F DRAWING
1ED198W BRAND MARKINGS
1ED013Y CONFIDENTIALITY
1ED012A INTERPRETATION
1E0011 INTPR & TOL
Caterpillar: Confidential Yellow
RECORDS
UNLESS OTHERWISE SPECIFIED
DIMENSIONS ARE IN mm
DIMENSIONS A/D TOL ARE BASIC
VERSION TYPE PRIMARY X SECONDARY
THIRD ANGLE PROJECTION
SHEET 11 OF 15
SIZE W973
CATERPILLAR
DIAGRAM-WIRING
(GCCP1.5)
6339886 SIZE - DWG 01 E

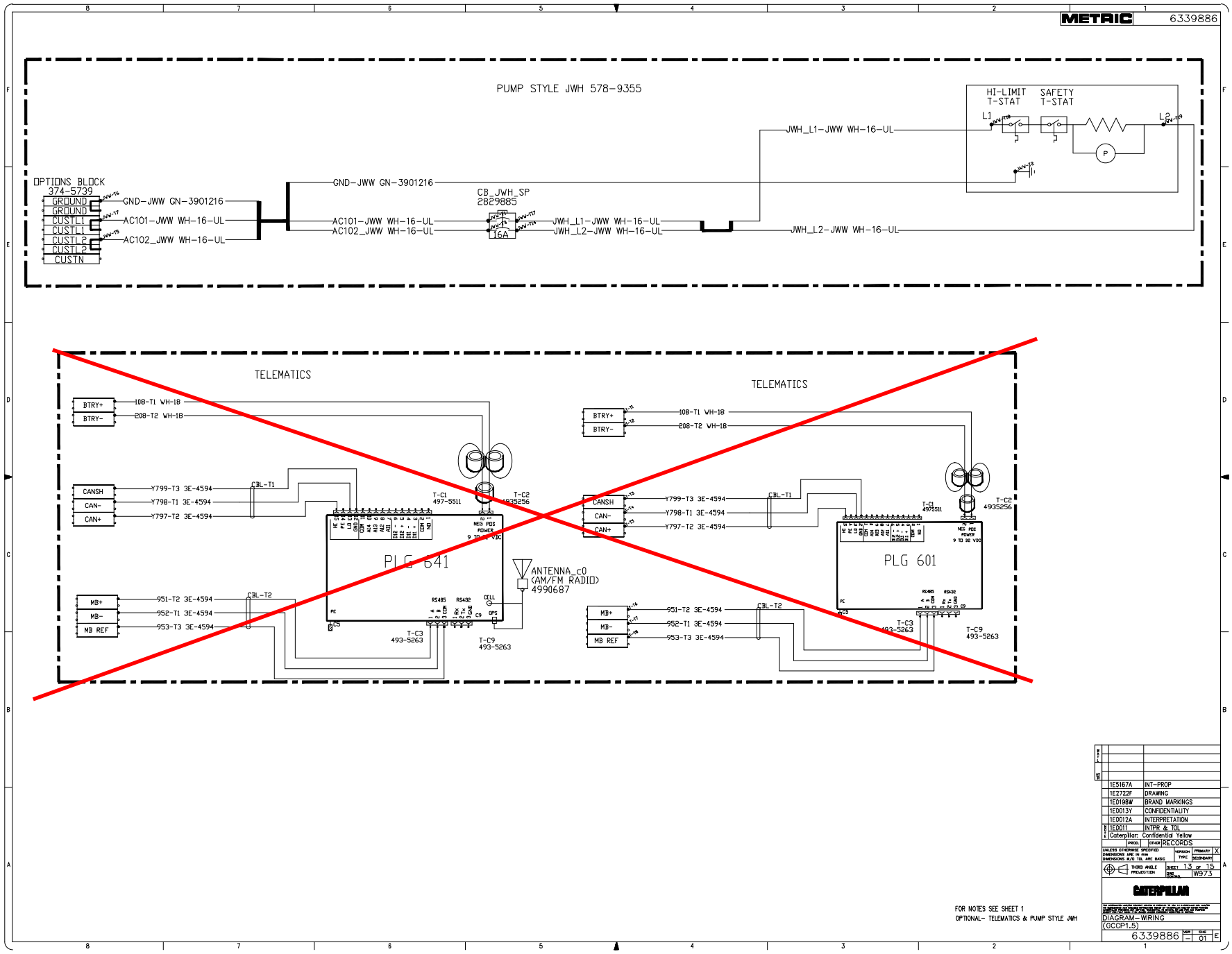
METRIC
6339886
PUMP STYLE JWH 578-9355
HI-LIMIT T-STAT
SAFETY T-STAT
L1
L2
P
JWH_L1-JWW WH-16-UL
OPTIONS BLOCK 374-5739
GROUND
GROUND
CUSTL1
CUSTL1
CUSTL2
CUSTL2
CUSTN
GND-JWW GN-3901216
AC101-JWW WH-16-UL
AC102_JWW WH-16-UL
CB_JWH_SP 2829885
16A
JWH_L1-JWW WH-16-UL
JWH_L2-JWW WH-16-UL
JWH_L2-JWW WH-16-UL
TELEMATICS
BTRY+
BTRY-
108-T1 WH-18
208-T2 WH-18
CANSH
CAN-
CAN+
Y799-T3 3E-4594
Y798-T1 3E-4594
Y797-T2 3E-4594
CBL-T1
T-C1 497-5511
T-C2 4935256
PLG 641
ANTENNA_C0 (AM/FM RADIO) 4990687
MB+
MB-
MB REF
951-T2 3E-4594
952-T1 3E-4594
953-T3 3E-4594
CBL-T2
T-C3 493-5263
T-C9 493-5263
TELEMATICS
PLG 601
FOR NOTES SEE SHEET 1
OPTIONAL- TELEMATICS & PUMP STYLE JWH
1E5167A INT-PROP
1E2722F DRAWING
1E0198W BRAND MARKINGS
1E0013Y CONFIDENTIALITY
1E0012A INTERPRETATION
1E0011 INTPR & TOL
Caterpillar: Confidential Yellow
RECORDS
SHEET 13 OF 15
W973
CATERPILLAR
DIAGRAM-WIRING (GCCP1.5)
6339886
01

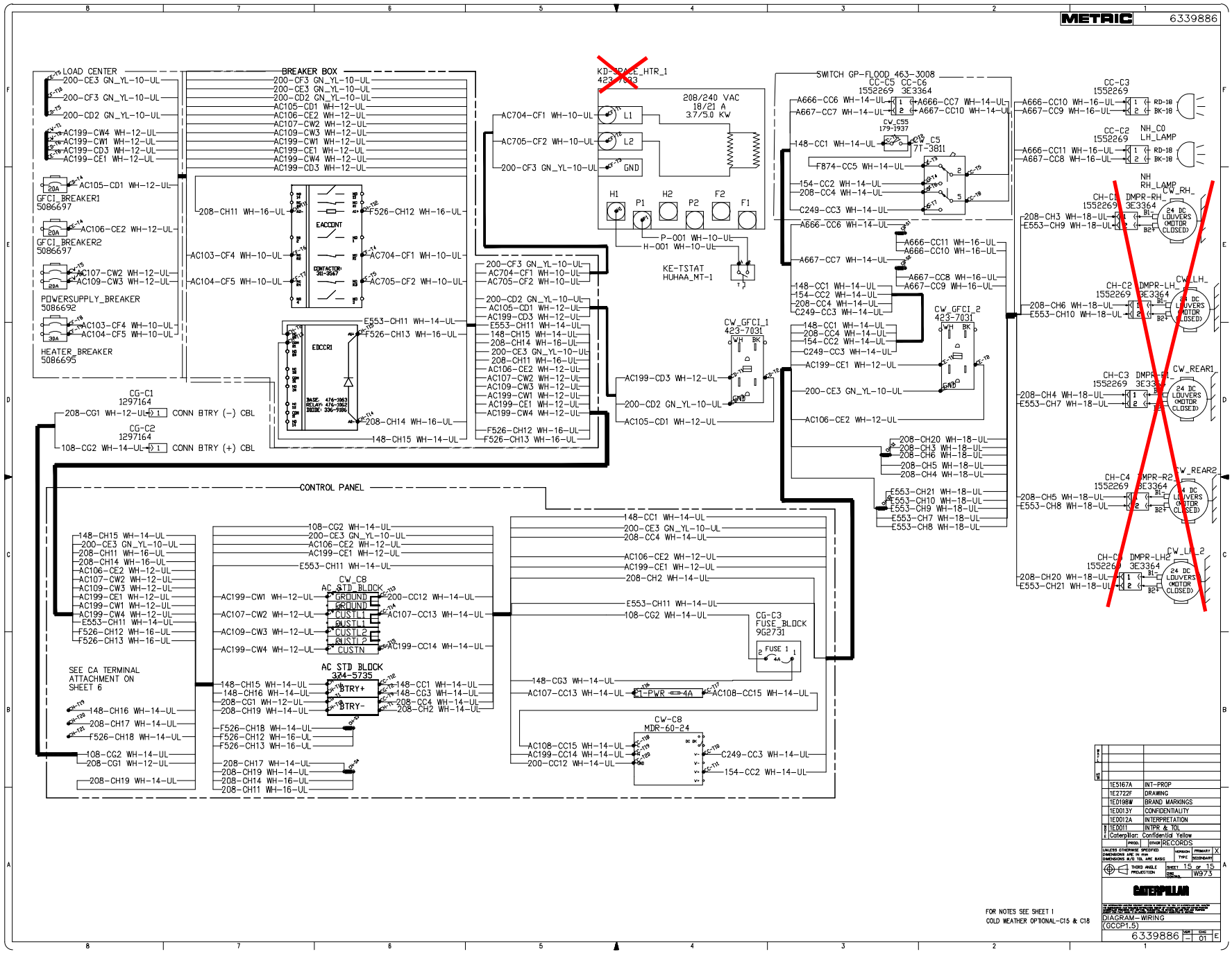
METRIC
6339886
LOAD CENTER
BREAKER BOX
GFCI_BREAKER1
5086697
GFCI_BREAKER2
5086697
POWERSUPPLY_BREAKER
5086692
HEATER_BREAKER
5086695
EACCONT
EDCCR1
CG-C1
1297164
CONN BTRY (-) CBL
CG-C2
1297164
CONN BTRY (+) CBL
KD-SPACE_HTR_1
208/240 VAC
18/21 A
3.7/5.0 KW
KE-TSTAT
HUHAA_MT-1
CW_GFCI_1
423-7031
CW_GFCI_2
423-7031
SWITCH GP-FLOOD 463-3008
CC-C5 CC-C6
1552269 3E3364
CC-C3
1552269
CC-C2
1552269
NH_C0
LH_LAMP
NH
RH_LAMP
CW_RH_
CH-C1 DMPR-RH_
1552269 3E3364
CH-C2 DMPR-LH_
1552269 3E3364
CW_LH_
CH-C3 DMPR-R1_
1552269 3E3364
CW_REAR1
CH-C4 DMPR-R2_
1552269 3E3364
CW_REAR2
CH-C5 DMPR-LH2
1552269 3E3364
CW_LH_2
24 DC LOUVERS (MOTOR CLOSED)
CONTROL PANEL
CW_C8
AC STD BLOCK
GROUND
CUSTL1
CUSTL2
CUSTN
AC STD BLOCK
374-5735
BTRY+
BTRY-
CG-C3
FUSE_BLOCK
9G2731
FUSE 1
CW-C8
MDR-60-24
SEE CA TERMINAL
ATTACHMENT ON
SHEET 6
FOR NOTES SEE SHEET 1
COLD WEATHER OPTIONAL-C15 & C18
1E5167A INT-PROP
1E2722F DRAWING
1E0198W BRAND MARKINGS
1E0013Y CONFIDENTIALITY
1E0012A INTERPRETATION
1E0011 INTPR & TOL
Caterpillar: Confidential Yellow
RECORDS
SHEET 15 OF 15
W973
CATERPILLAR
DIAGRAM-WIRING
(GCCP1.5)
6339886
01

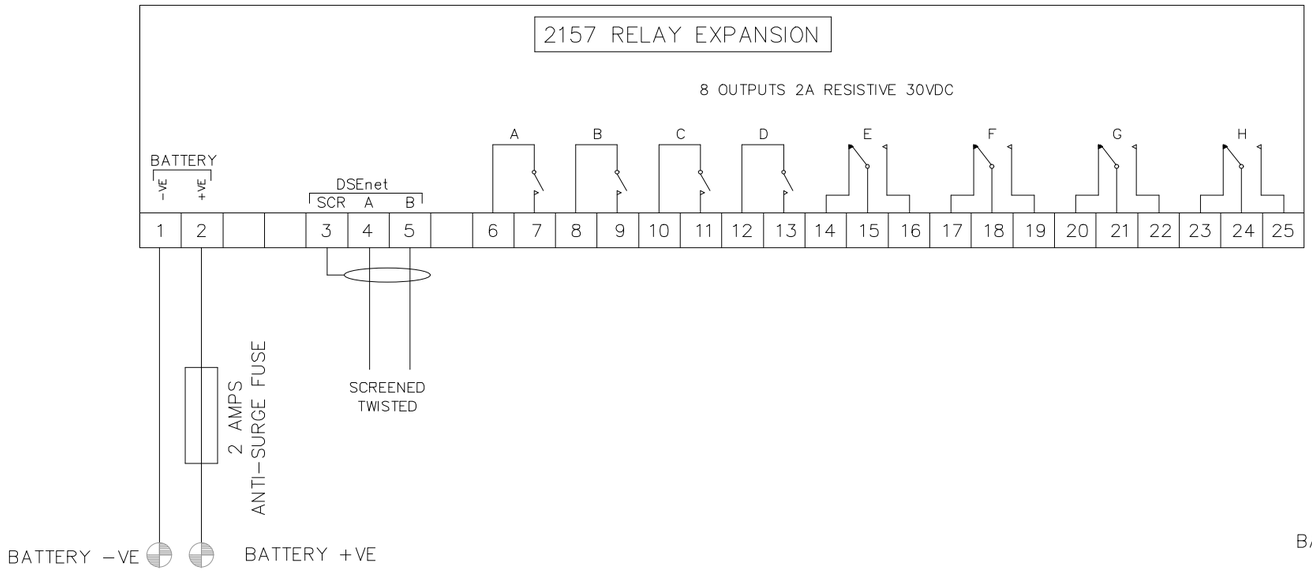

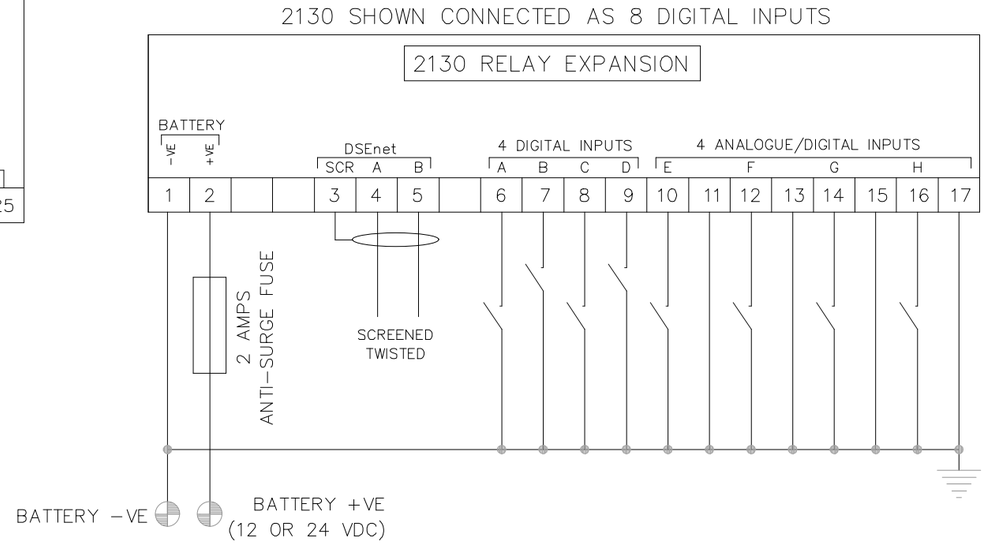

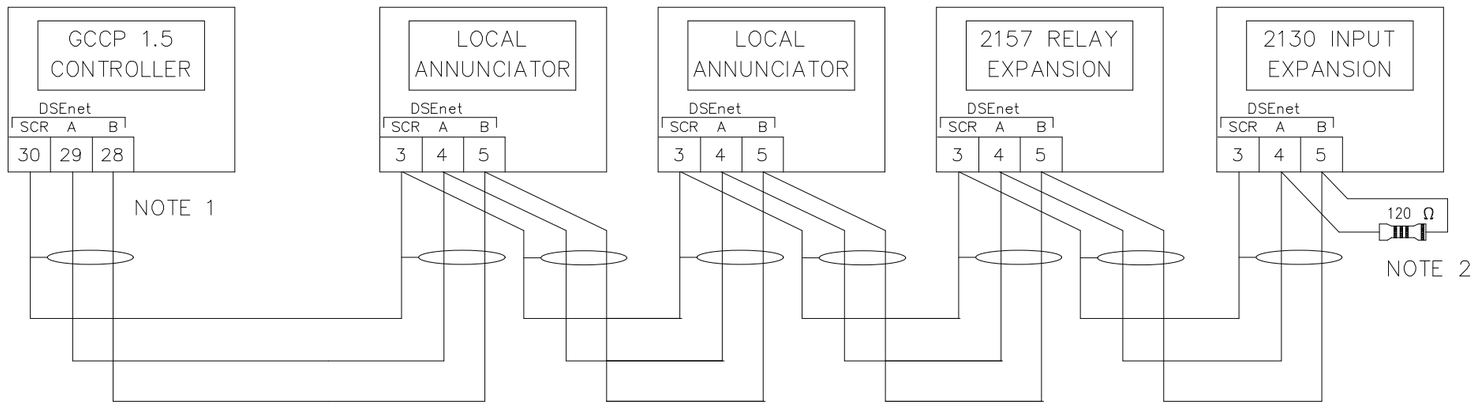

NOTE 1
AS A TERMINATING RESISTOR IS INTERNALLY FITTED TO THE HOST CONTROLLER, THE HOST CONTROLLER MUST BE THE FIRST UNIT ON THE DSEnet

NOTE 2
A 120 OHM TERMINATION RESISTOR MUST BE FITTED TO THE LAST UNIT ON THE DSEnet

DRAWN D. URIARTE	DATE 1/8/25	QUINN POWER SYSTEMS CAT	656 E. LA CADENA DR RIVERSIDE, CA 92507
CHECKED T. PINT	DATE 1/8/25		
APPROVED	DATE		
TITLE: OPTIONAL MODULES INPUT & OUTPUT MODULES		SCALE: NONE	JOB: CITY OF REDLANDS-TEXAS BS COUNTRY CLUB, FIFTH, & AGATE PS
			DWG NO. E230557-3

GCCP 1.2 & 1.5

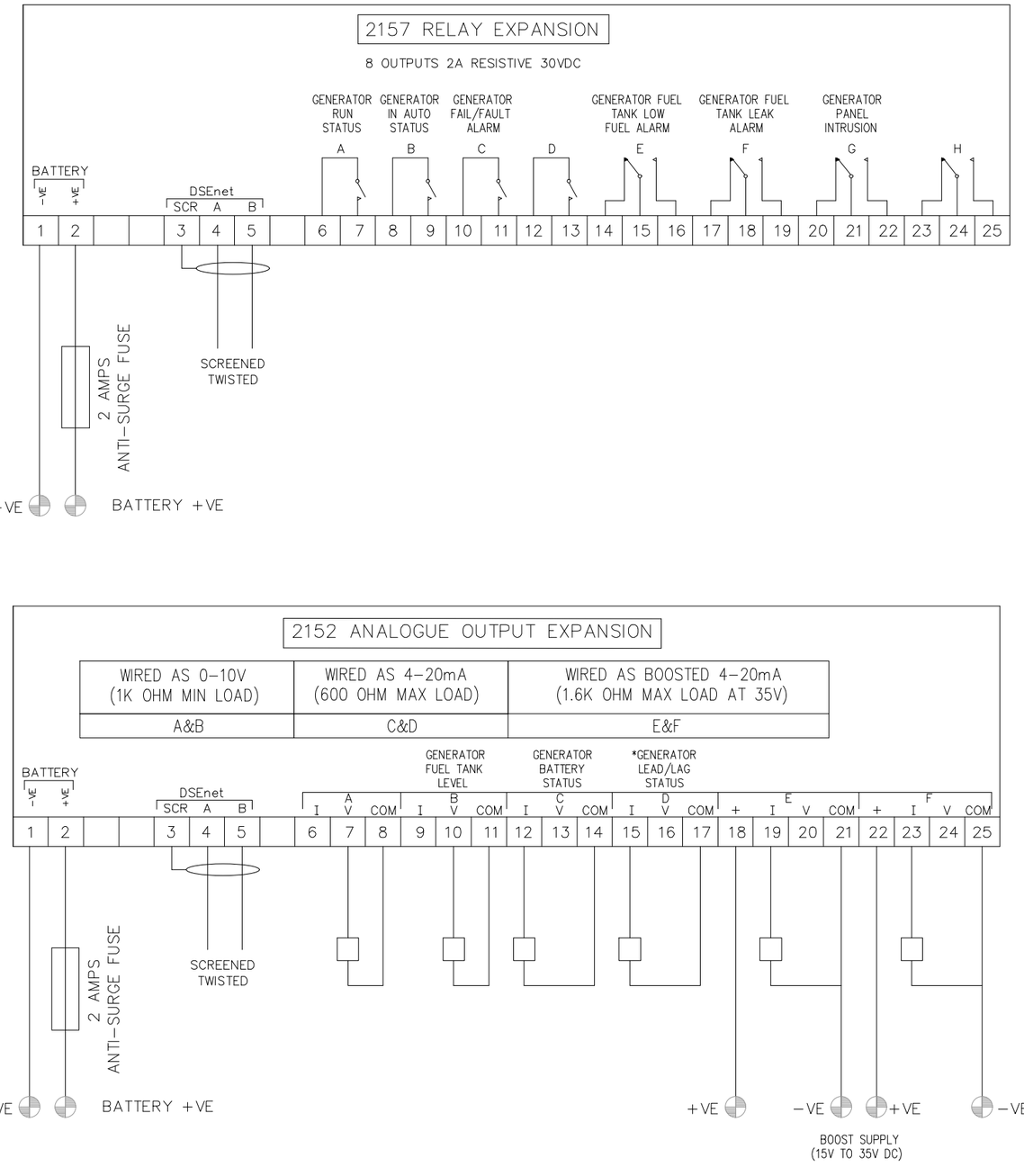

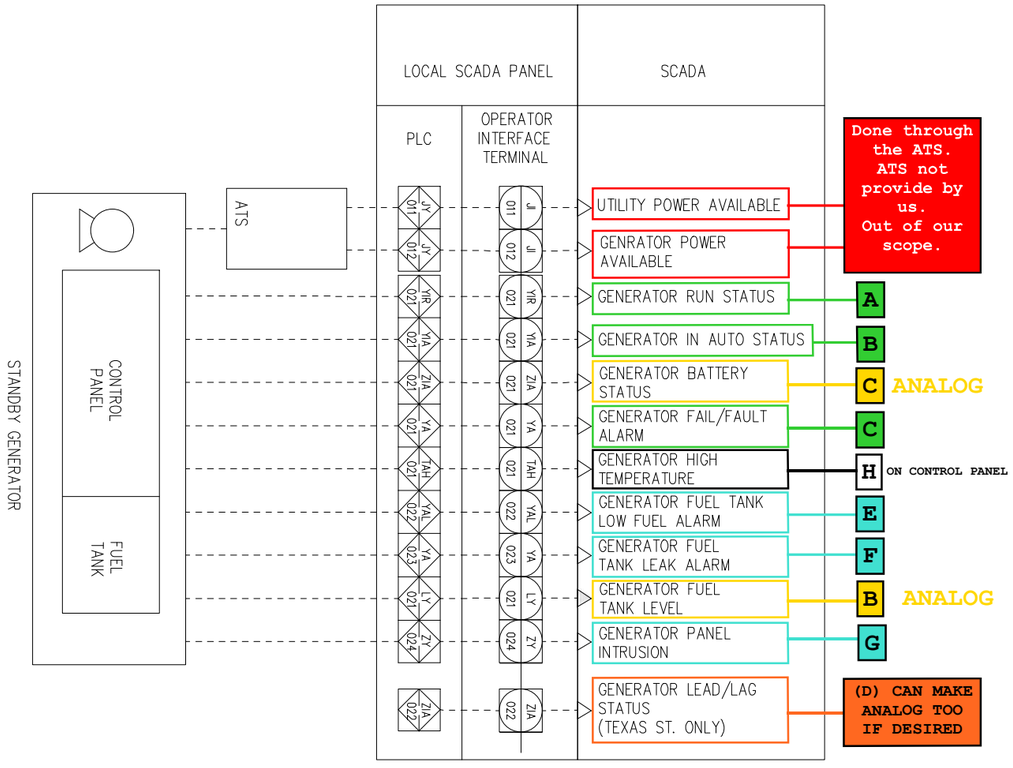

DRAWN D. URIARTE	DATE 5/9/2025	QUINN POWER SYSTEMS CAT	656 E. LA CADENA DR RIVERSIDE, CA 92507
CHECKED	DATE		
APPROVED	DATE		
TITLE: OPTIONAL MODULES INPUT & OUTPUT MODULES CONNECTION ILLUSTRATION	SCALE: NONE	JOB: CITY OF REDLANDS-TEXAS BS COUNTRY CLUB, FIFTH, & AGATE PS	
		DWG NO. N/A	

4.2 SCHEMATIC INTERCONNECTION DIAGRAM

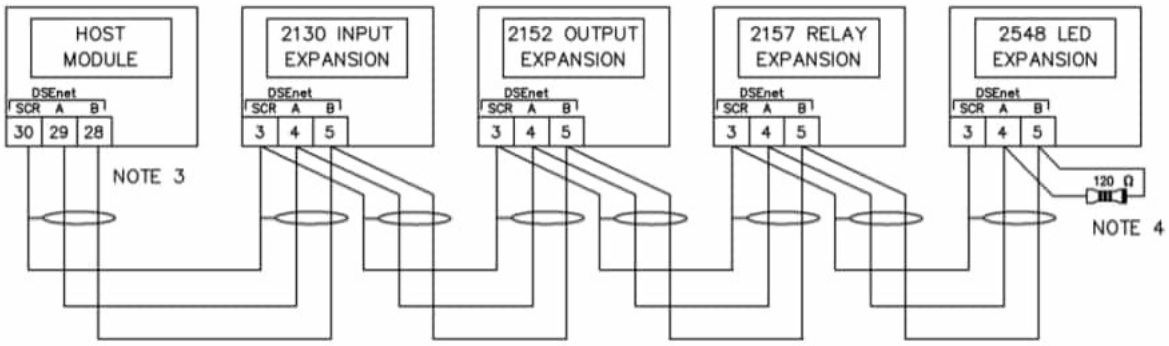

NOTE 3
AS A TERMINATING RESISTOR IS INTERNALLY FITTED TO THE HOST CONTROLLER, THE HOST CONTROLLER MUST BE THE FIRST UNIT ON THE DSEnet

NOTE 4
A 120 OHM TERMINATION RESISTOR MUST BE FITTED TO THE LAST UNIT ON THE DSEnet

4.3 TYPICAL WIRING DIAGRAM FOR ANALOG OUTPUT MODULE

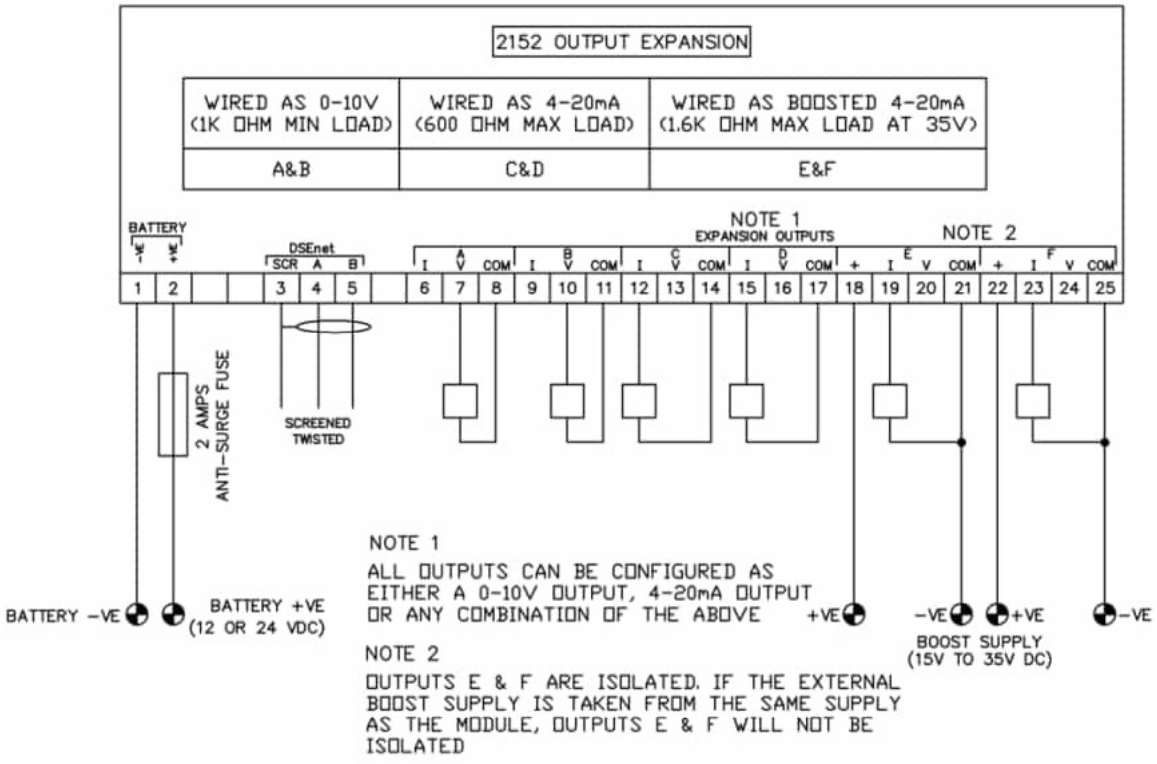

NOTE 1
ALL OUTPUTS CAN BE CONFIGURED AS EITHER A 0-10V OUTPUT, 4-20mA OUTPUT OR ANY COMBINATION OF THE ABOVE

NOTE 2
OUTPUTS E & F ARE ISOLATED. IF THE EXTERNAL BOOST SUPPLY IS TAKEN FROM THE SAME SUPPLY AS THE MODULE, OUTPUTS E & F WILL NOT BE ISOLATED

NOTE : Configuration of the inputs is performed in the host controller.

Extra Instructions discussed and shared for the Modules Wiring:

1. *Generator Engine Temperature High Alarm (TAH) should be a Discrete Output (DO) relay at the Generator Panel to be read as a Discrete Input (DI) signal at the PLC.*
   Setting it up as a DO for the input as a DI to their PLC is not a problem. (The output H shown in the image below is an output straight from the GCCP control panel.)



2. *Generator Battery Status should be an Analog Output (AO) to provide the Battery Voltage to be read as an Analog Input (AI) signal at the PLC.*
   We can do a AO out for battery voltage creating a custom curve with a range of their preference. (I will add it to the Analog Output wiring diagram as an AO out.)



3. *The Texas St. Lead/Lag status should be a DO relay at the Generator Panel to be read as a DI signal at the PLC.*
   The Lead/Lag status looks to be an issue as there is not a configurable DO for that. We can create an Analog output for it if desired. (Unfortunately, we are only able to do an Analog output for Lead/Lag status)

4. *Confirm that the expansion modules will be factory installed by CAT.*
   Installed by a Cat Dealer as Cat does not provide the Analog modules. (We will be sure to have all the modules installed and programmed/wired before delivering to the job site)

5. *Provide wiring diagram for the AO Expansion Module for the Analog Signals (similar to what was provided for the DO module).*
   See attached for expansion Module drawing with both the DO module and Analog expansion module on it. I also added a page from the analog operators manual for more details if needed. If you are good with this, I will add it to the Submittal as well.

David,
I thought that they were talking about Power Factor Lead/Lag. Now I see that they want to know which generator set is lead, first to start at next call to run and which one will wait to start as the lag unit. I've checked outputs on the 1.5 and do not see an output to communicate which unit will start next as the control panel will automatically balance hours between the two units to keep them with fairly equal operating hours. With the Load Demand Scheme we can "start all sets initially" or "start sets as load requires". The panels will keep the units hours in balance as they communicate over the MSC link. I recommend starting all units initially and then letting them shed a unit off depending on load.

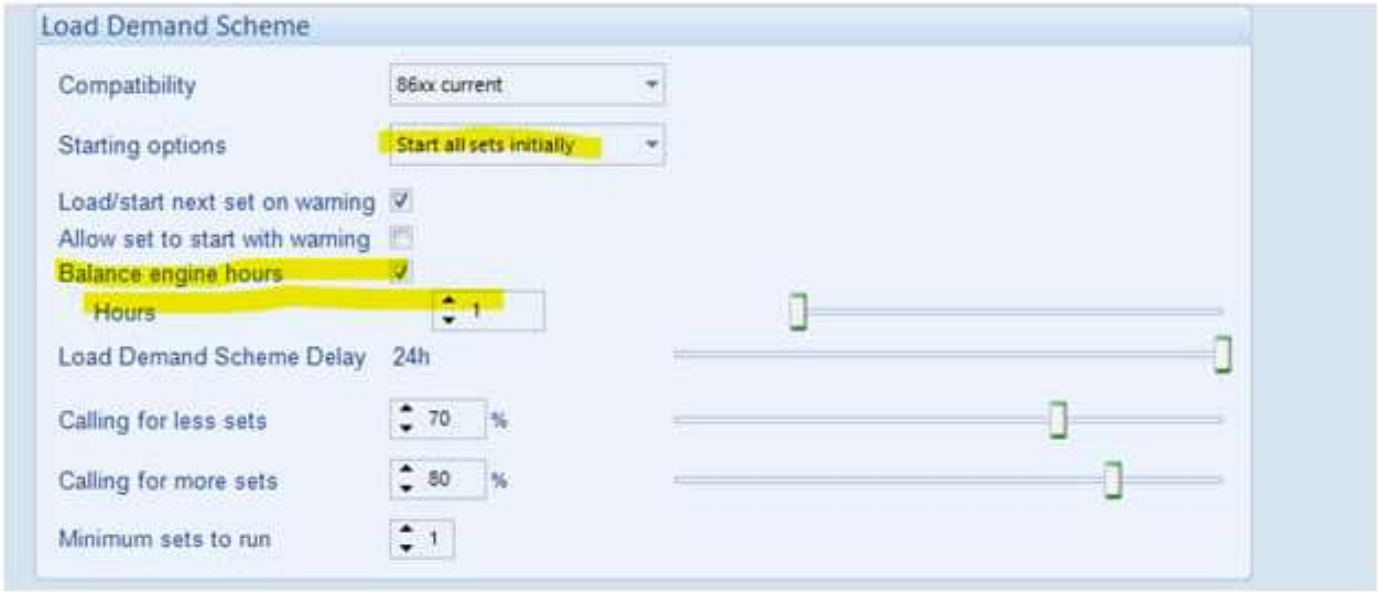

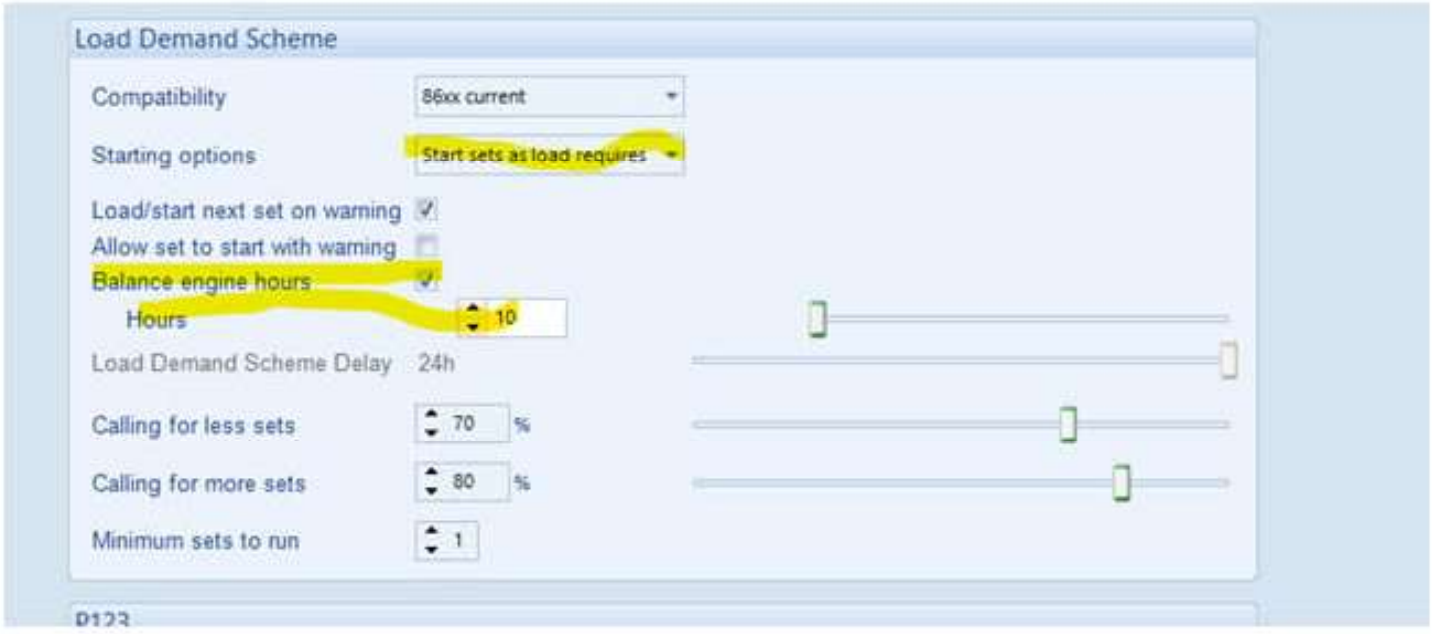

THIS PAGE INTENTIONALLY LEFT BLANK

APPENDIX I
Diesel Particulate Filter Submittals

THIS PAGE INTENTIONALLY LEFT BLANK

JOHNSON MATTHEY
PASSIVE DPF

Passive DPF

Johnson Matthey SEC LLC
900 Forge Avenue, Suite 100
Audubon, PA 19403
T 484-320-2131

6/25/2025
Attention: Art Jimenez
Quinn Power
656 East La Cadena Dr., Riverside, CA 92507

Re: Proposal No. DW-3165 for Johnson Matthey Passive Diesel Particulate Filter for City of Redlands

Dear Mr. Jimenez:

Thank you for considering Johnson Matthey for your emissions control needs. We are pleased to provide this proposal for a California Air Resources Board (CARB) Level 3+ verified Johnson Matthey diesel particulate filter. This offering can be used for either standby or prime power applications and includes critical grade silencing grade silencing to simultaneously control PM, CO, HC and sound emissions from the C18 engine. This patented system incorporates precious metal catalyst and particulate filter components that are engineered as a totally passive system,

This proposal conforms to amended California Air Resources Board (CARB) regulations for Verified Diesel Emission Control Strategies that have been implemented by CARB.

which does not require supplemental heat or electricity.

For additional information about this product and other Johnson Matthey emission solutions, please visit www.jmsec.com or contact us if you have any questions or comments.

Sincerely,



Robert Bono
Western US Regional Manager, Stationary Emissions Control, LLC

949-307-1265 mobile
bonorp@jmusa.com

Johnson Matthey Public Limited Company. 5th Floor, 25 Farringdon Street, London EC4A 4AB.
Registered in England No. 33774

JM

1. DESIGN PARAMETERS

The following conditions were used to design and assure the passive Diesel Particulate Filter with critical grade silencing Grade Silencer will meet the project requirement:

Table 1. Full Load Design Parameters

Engine	Caterpillar C18
Application	Power Generation
Generator Capacity -kW	650
RPM	1800
Load	100%
Operating Hours per Year	Standby Use
Number of Diesel Particulate Filter Units	1
Type of Fuel	ULSD
Design Exhaust Flow Rate and Temperature at Full Load	5618 CFM @ 797°F

Table 2. Full Load Emissions Data

Exhaust Component	Pre Emissions (g/bhp-hr)	Post Emissions (g/bhp-hr)	Reduction Efficiency
PM	.03	0.0045	85% PM Reduction
CO	.21	0.042	80% CO Reducton
HC	.09	0.027	70% HC Reduction
NOx	4.59	4.59	0% NOx Reduction

Table 3. System Data

Estimated Clean Pressure Drop	11.3”WC
Estimated Coated Filter DPF Pressure Drop at recommended Regeneration Time	18.7”WC
Allowable Engine Back Pressure	40”WC

Johnson Matthey has calculated the appropriate catalyst and filter volume based on the above Design Parameters. All operating conditions must be closely reviewed as different conditions may void the warranty.

2. THE EQUIPMENT DESCRIBED WILL BE SUPPLIED:

2.1 CARB 3+Verified Passive Diesel Particulate Filter

JM-CRT(+)-5-N-CS-BITO-14/14-RT

The diesel particulate filter is Johnson Matthey's patented Continuous Regenerating Technology (CRT) system. The diesel particulate filter is comprised of an oxidation catalyst(s) in direct series with a ceramic filter element(s). If our Carbon steel version (CS) is called out, they are painted with high-temperature black paint, which can rust in a cosmetic fashion, and is not warranted. If our Stainless steel (SS) version is called out it is not painted and is much more resistant to rust.

The organic particulate matter in the engine exhaust is comprised of carbon soot, soluble organic fraction (un-burnt HCs) and ash. The catalyst oxidizes the soluble organic fraction of PM to CO_2 and H_2O, oxidizes HC to CO_2 and H_2O, and some NO to NO_2. The NO_2 oxidizes the carbon soot that is collected downstream on the filter elements to CO_2, which regenerates the filter and called passive regeneration. Inorganic ash that is in the diesel exhaust will also be collected on the filter elements, and because this doesn't burn (oxidize) it necessitates the eventual cleaning of the filter elements (for standby operation, this cleaning of ash will not be necessary for many years). Exhaust sound silencing is integrated with the diesel particulate filter as one complete assembly.

2.2 SootAlert Module (Datalogger and Monitor)

A Johnson Matthey CARB Verified SootAlert is provided with each CRT(+). The SootAlert monitors, logs the operation of the DPF and predicts when the filters will need regeneration by providing a Yellow-Light indicator when regeneration is needed soon, and a Red-Light indicator when regeneration is required immediately. The SootAlert will monitor the regeneration and indicate that regeneration is complete by providing a Green Light indicator, at which time the filters have successfully been regenerated. The SootAlert includes an Ethernet port for remote monitoring of the status of the filters. Both digital and analog outputs are available for remote signaling.



2.3 Operation and Maintenance Manuals

Price includes electronic Operation and Maintenance manuals and approval drawing package.

5. WARRANTY

Johnson Matthey warrants that the CARB verified CRT Particulate Filter System will meet the particulate matter reduction percentage as outlined in Table 2 Emissions Data when installed and operated in accordance with Johnson Matthey's Operation and Maintenance Manual and when operated on a diesel engine that meets the engine manufacture's specifications. Except to the limited extent provided by Section 11 of Johnson Matthey's General Terms and Conditions, no other warranties, express or implied, are provided.

The warranty for the CARB verified Passive Particulate Filter System supplied by Johnson Matthey is 60 months from date of shipment or 4,200 hours of engine operation, whichever occurs first. This warranty is subject to limited product warranty terms.

Please refer to the appendices for more details. This warranty is subject to the attached warranty terms. For carbon steel CRT units, the high temperature black paint finish does not guarantee rust from occurring. A stainless-steel version is available, as an option, for an additional price.

Johnson Matthey must be notified in writing upon system startup or the warranty will be void.

Johnson Matthey

CRT®(+) Diesel Particulate Filter System

Johnson Matthey Sets the Standard for Stationary Diesel Engine PM Emissions Control

Benefits:

- Reduces PM, HC and CO by over 90%
- Verified by CARB for emergency backup power and prime power stationary diesel engines
- Multiple-filter design enables the **CRT(+)** to be used on all engine sizes
- Modular filter design for ease of installation, routine service and easy maintenance
- Self-regeneration and filter cleaning for convenience and ease-of-use
- Passive-regen technology requires no supplemental heat or fuel
- For optimal performance, operates with ULSD (ultra low sulfur diesel) and B20 biodiesel fuels
- Each unit is equipped with the CRTdm diagnostic module, with data logging, back pressure alarm capability with computer interface
- Housed in stainless steel for strength and durability
- PM collection/filtration begins when engine starts and continues for the entire run time



Johnson Matthey CRT®(+), Continuously Regenerating Technology

The **CRT®(+)** (Continuously Regenerating Technology) DPF is Johnson Matthey's patented technology for the control of emissions from diesel engines. It is the first PM control technology that can regenerate at an exhaust temperature of 465°F, making the **CRT(+)** the most efficient DPF available. The **CRT(+)** has been verified by the California Air Resources Board (CARB) for application to all stationary diesel engines used for generating power, including:

- Emergency Back-Up Power
- Prime Power

This advanced passive regenerating diesel particulate filter system not only reduces particulate matter (PM) by 90%, it also reduces hydrocarbon (HC) and carbon monoxide (CO) by 90% or more and meets the 2009 CARB NO_2 limit of 20%.



Engineering Innovation Makes the CRT(+) Uniquely Superior

Based on a number of unique design factors, the Johnson Matthey **CRT(+)** is engineered to ensure optimum effectiveness. While other filter systems may require a catalyst coating

JM

Johnson Matthey

Stationary Emissions Control

Suite 200, 400 Lapp Road, Malvern, PA 19355, USA

TEL: (484) 320-2136, FAX: (484) 320-2152

E-MAIL: info@jmsec.com

www.jmsec.com

Johnson Matthey

CRT®(+) Diesel Particulate Filter System

CARB verified for emergency backup power and prime power; meets NO_2 slip requirements

on the filter, Johnson Matthey employs a novel two-component design in which the catalyst is separate from the filter. This allows for maximum catalyst and filter performance. The catalyst is positioned before the filter to convert NO into NO_2. The NO_2 then oxidizes the soot that is collected on the filter to regenerate the filter. The NO_2 is more effective than oxygen in combusting the soot and at a much lower temperature than is normally required. In fact, the **CRT(+)** filter is regenerated at a temperature that is 20% lower than other filters on the market. This process of NO_2 soot combustion is the heart of the Johnson Matthey patent. The catalyst also converts CO and HC into CO_2 and water.

The significantly lower operating temperature of the Johnson Matthey **CRT(+)** is compatible with typical diesel exhaust temperatures, so no supplemental heat is required. Using a "flow-through" platinum coated catalyst, the soot travels directly through the catalyst and is collected on the filter. As a result, the catalyst is kept free of soot, ensuring that it performs at the highest level possible. Soot is trapped on the filter where it's then destroyed by the NO_2 produced by the catalyst. This coordinated operation between the catalyst and filter makes the **CRT(+)** highly efficient and effective.

What's more, the Johnson Matthey **CRT(+)** DPF utilizes passive regeneration to keep the filter clean during engine operation. By contrast, active-regen filter technologies require an external heat source such as fuel injection, burner or electricity. The potential to cause a fire is always a risk in an active-regen system. When compared to other passive-regen DPF technologies, the **CRT(+)** DPF can regenerate at engine exhaust temperatures well below all of the others, making the **CRT(+)** the most efficient DPF on the market today.

Proven Success

For 40 years, Johnson Matthey has been the global leader in the emissions control industry. When it comes to performance, Johnson Matthey's CRT technology has proven to be the superior solution for mobile and stationary diesel engines. It has been installed on more than 150,000 heavy duty diesel engines worldwide. The leader—Johnson Matthey—continues to be the best choice for all engine emissions control applications.

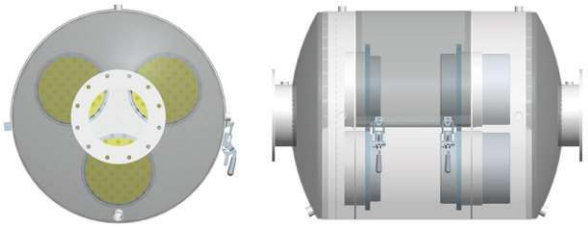

FILTER TECHNOLOGIES

Comparison of CARB verified particulate filter technologies for stationary diesel engines

	JOHNSON MATTHEY CRT®(+) FILTER SYSTEM	OTHER FILTER SYSTEMS
Filter technology	Catalyst + ceramic filter	Catalyzed ceramic filter or Burner and SiC filter
Regeneration technology and temperature	Passive: @ 240°C for 40% of duty cycle, or 5 hours @ 300°C after every 200 consecutive hours < 240°C	Passive: @ 300°C for 30% of duty cycle or 2 hours, whichever is longer Active regeneration required: 0.1 PM : < 375°C 0.2 PM : < 405°C 0.3 PM : < 420°C 0.4 PM : < 435°C
NOx / PM Ratio	15 @ > 300°C 20 @ < 300°C	
Meets CARB 2009 20% NO_2 limit	Yes	No
Full CARB Verification	• Emergency backup • Prime (conditional)	• Emergency backup
Diesel engine family applicability	≤ 0.4 g/bhp-hr PM	Passive: ≤ 0.1 g/bhp-hr PM Active: ≤ 0.4 g/bhp-hr PM
Verification level	3 (> 85% PM reduction)	3 (> 85% PM reduction)
Maximum consecutive minutes at idle	720	Passive 240 Active 720
# of cold starts idle time after each cold start	24 30 minutes	12 to 24 10 to 30 minutes
Max. hours before filter cleaning	8000 depending on hours of usage	2000 to 5000 project specific
Fuel	<15 ppm sulfur or biodiesel (20%)	Similar or less accepting

Johnson Matthey
Stationary Emissions Control

Suite 200, 400 Lapp Road, Malvern, PA 19355, USA
TEL: (484) 320-2136, FAX: (484) 320-2152
E-MAIL: info@jmsec.com

©2009 Johnson Matthey

REVISIONS					
REV.	DATE	DESCRIPTION	BY	ENG	APPROVED
0	10/19/16	INITIAL RELEASE	M.D.C.		EJB 8-30-17
1	5/29/2018	REVISED TITLE BLOCK & TOLERANCE BLOCK	M.D.C.		EJB 10/17/18

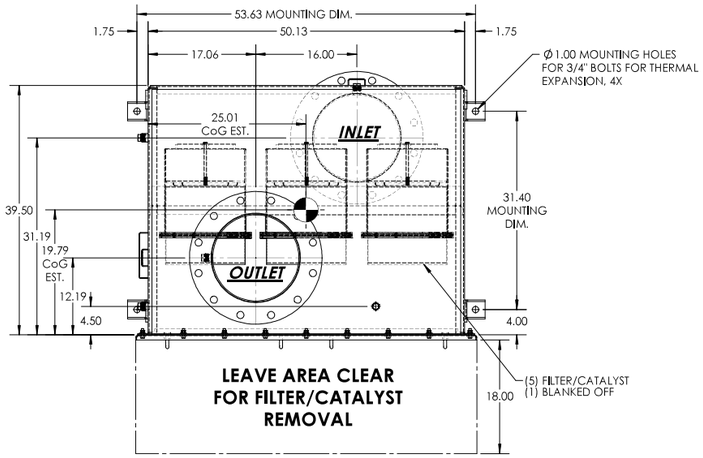

PLAN VIEW

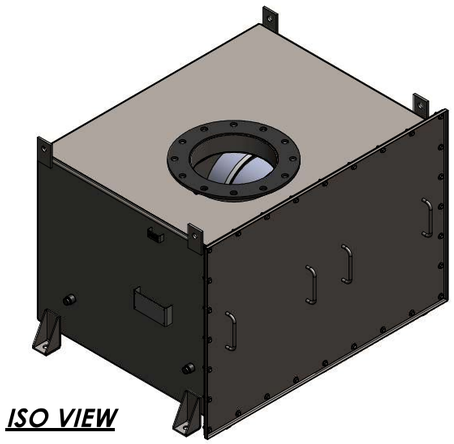

ISO VIEW

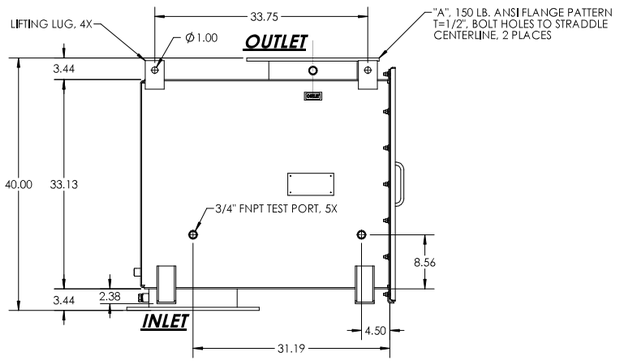

ELEVATION SIDE VIEW

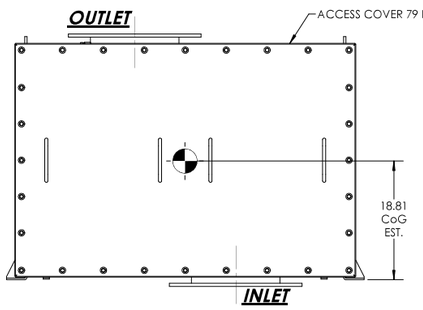

ELEVATION FRONT VIEW

FLANGE CONFIGURATION AND PART NUMBER		
FLANGE SIZE "A"	CS PART NO.	SS PART NO.
12	190226	190887
14	190227	190888

* BOLD FLANGE SIZE SHOWN

NOTES:

1. WEIGHT IS ESTIMATED AND IS BASED UPON THE SHOWN CONFIGURATION.
2. ESTIMATED SOUND ATTENUATION: CRITICAL GRADE 25-30 dBA.
3. ALL WELDING TO BE IN ACCORDANCE WITH WELDING GUIDELINES, SEE DRAWING 609826.
4. MATERIAL (MS): 7 GA. ASTM A36 CARBON STEEL or 304 STAINLESS STEEL.
5. FINISH: HIGH TEMPERATURE BLACK PAINT TO HOUSING AND FLANGES. (CARBON STEEL ONLY). PER JM PAINT SPEC SEC-EN-P-026.
6. PIPE DIAMETER OF CUSTOMER'S EXHAUST LINE(S) SHALL BE NO LESS THAN THE FLOW AREA OF THE INLET CONNECTION(S) PROVIDED BY JOHNSON MATTHEY.
7. JM BACKPRESSURE GUARANTEE EXTENDS FROM THE CRT INLET CONNECTION TO THE CRT OUTLET CONNECTION ONLY. CUSTOMER IS RESPONSIBLE FOR BACKPRESSURE OR PRESSURE DROP OF ALL OTHER COMPONENTS IN THE ENGINE EXHAUST SYSTEM.

STANDARD TOLERANCES UNLESS SPECIFIED OTHERWISE [ ] ALTERNATE DIMENSION UNITS ARE FOR REFERENCE ONLY.					
MACHINING				GENERAL FABRICATION	
0.0	±0.0300"	FRACTIONS	±1/16"	< 36"	±1/16"
0.00	±0.0150	ANGLES	±0.5°	36-140"	±1/8"
0.000	±0.0050	SURFACE FINISH	125 µ"AA	> 140"	±1/4"
FILLETS SHOWN SHARP = .03"R MAX.				ANGLES	±0.5°
BREAK CORNERS .03" X 45° CHAMFER					
TAPPED HOLES - MIN. DEPTH FOR FULL THREADS = 1.8 X DIAMETER CHAMFER ALL TAPPED HOLES TO ROOT OF FIRST THREAD					
ALL DIMENSIONS ARE INCHES UNLESS SPECIFIED OTHERWISE					

SUPPORTING THE HOUSING:

THE HOUSING SHALL BE SUPPORTED WITH AT LEAST 2 BEAMS RUNNING UNDERNEATH THE FEET. THESE BEAMS SHALL BE DESIGNED FOR THE HOUSING THERMAL EXPANSION AND WEIGHT. IF A FIXED POINT ON THE HOUSING IS REQUIRED PLEASE SET STATIONARY ONE "CORNER" ONLY AND LET THE OTHER (3) "CORNERS" EXPAND (THERMAL GROWTH). AN EXPANSION JOINT IS TYPICALLY REQUIRED ON THE INLET FLANGED CONNECTION.

Shipping Dims		
Length L"	Width W"	Height H"
Material		
Finish		
Weight (lbs)	Model Rev.	
1055		

THIS DRAWING IS OUR PROPERTY AND ALL THE INFORMATION CONTAINED THEREON IS TO BE KEPT CONFIDENTIAL BY THE RECIPIENT AND NOT TO BE USED OR DISCLOSED TO ANY OTHER PERSON, FIRM OR CORPORATION WITHOUT OUR EXPRESS CONSENT; AND THIS DRAWING SHALL NOT BE USED, DIRECTLY OR INDIRECTLY, EXCEPT IN CONNECTION WITH OUR WORK. ALL RIGHTS OF DESIGN OR INVENTION ARE PRESERVED

Johnson Matthey
Inspiring science, enhancing life

CRT(+) 6/5-N-MS-BITO-A/A-RT GENERAL ARRANGEMENT

DRAWN BY	CHECKED	DATE	WHERE USED	DISCIP.	PROJECTION: THIRD ANGLE	SHEET NO.	SIZE
MDC	EJB	10-19-16				1 OF 6	D
ENGINEER	APPROVED	SCALE	EWR NO.	SO NO.	DRAWING NO.	SHT.	REV.
	BAT	1:12			609899 -1-	1	

C:\JM Environmental\SEC\American Audubon\Standard Products\609xxx - CRT & SDPF\CRT_SDPF_GEN 2\Engineering\Fabrication Drawing\609899 (CRT 2 THRU 6 BITO R1).dwg, Friday, October 19, 2018 12:56:59 PM

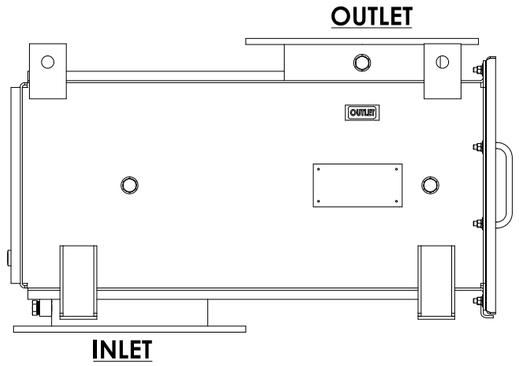

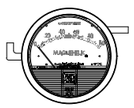



GAGE
SIDE AND BACK VIEW

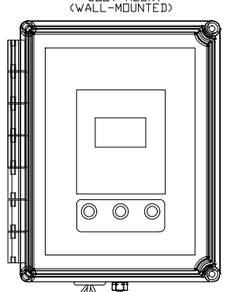

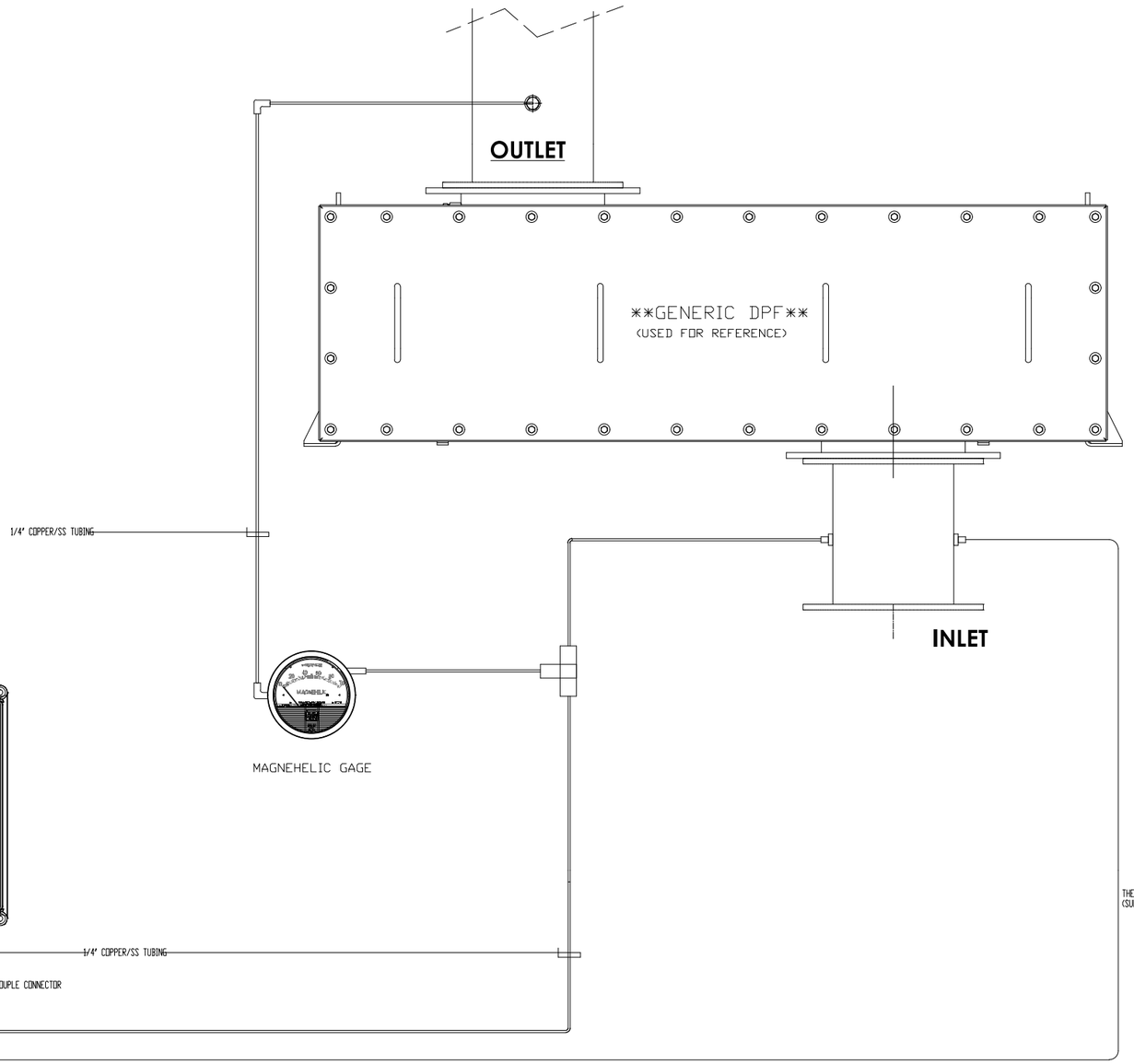

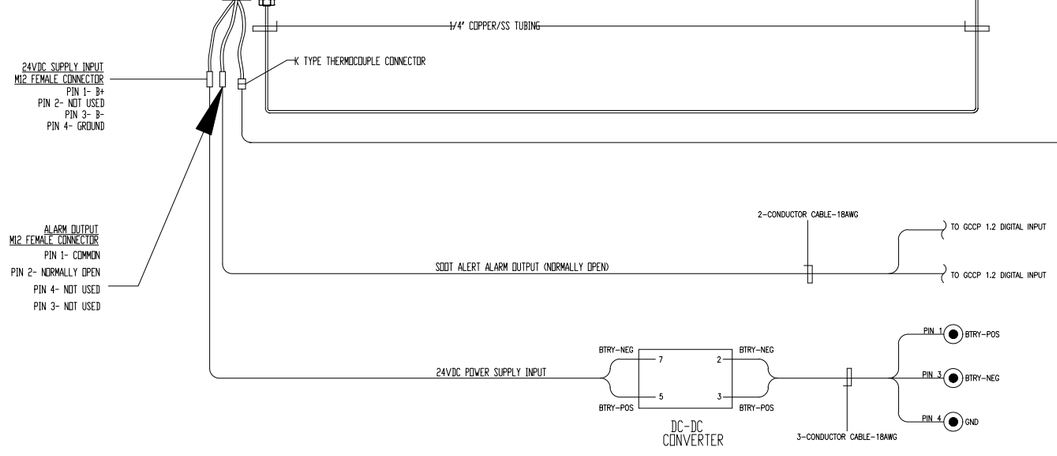

NOTES/LEGEND:

- GENSET AC TERMINAL STRIP
- EMCP DC TERMINAL STRIP

NO.	DATE	ITEM NO.	DRAWING NO.	NO. REQ'D	MATERIAL DESCRIPTION	REMARKS
0	ISSUED FOR APPROVAL	1	6345418 & 6345464		GCCP 1.2	CATERPILLAR

DRAWN: D. URIARTE — DATE: 08/08/2025
CHECKED — DATE
APPROVED — DATE
TITLE: JOHNSON MATTHEY DPF PANEL INTERFACE
SCALE: NONE
QUINN POWER SYSTEMS
656 E LA CADENA DR.
RIVERSIDE, CA 92507
JOB: 240171 - CITY OF REDLANDS
DWG NO. E240171

JOHNSON MATTHEY
PASSIVE DPF

Passive DPF

Johnson Matthey SEC LLC
900 Forge Avenue, Suite 100
Audubon, PA 19403
T 484-320-2131

6/25/2025
Attention: Art Jimenez
Quinn Power
656 East La Cadena Dr., Riverside, CA 92507

Re: Proposal No. DW-3164 for Johnson Matthey Passive Diesel Particulate Filter for City of Redlands

Dear Mr. Jimenez:

Thank you for considering Johnson Matthey for your emissions control needs. We are pleased to provide this proposal for a California Air Resources Board (CARB) Level 3+ verified Johnson Matthey diesel particulate filter. This offering can be used for either standby or prime power applications and includes critical grade silencing grade silencing to simultaneously control PM, CO, HC and sound emissions from the C15 engine. This patented system incorporates precious metal catalyst and particulate filter components that are engineered as a totally passive system,

This proposal conforms to amended California Air Resources Board (CARB) regulations for Verified Diesel Emission Control Strategies that have been implemented by CARB.

which does not require supplemental heat or electricity.

For additional information about this product and other Johnson Matthey emission solutions, please visit www.jmsec.com or contact us if you have any questions or comments.

Sincerely,



Robert Bono
Western US Regional Manager, Stationary Emissions Control, LLC

949-307-1265 mobile
bonorp@jmusa.com

Johnson Matthey Public Limited Company. 5th Floor, 25 Farringdon Street, London EC4A 4AB.
Registered in England No. 33774

JM

1. DESIGN PARAMETERS

The following conditions were used to design and assure the passive Diesel Particulate Filter with critical grade silencing Grade Silencer will meet the project requirement:

Table 1. Full Load Design Parameters

Engine	Caterpillar C15
Application	Power Generation
Generator Capacity -kW	500
RPM	1800
Load	100%
Operating Hours per Year	Standby Use
Number of Diesel Particulate Filter Units	1
Type of Fuel	ULSD
Design Exhaust Flow Rate and Temperature at Full Load	3,842 CFM @ 942°F

Table 2. Full Load Emissions Data

Exhaust Component	Pre Emissions (g/bhp-hr)	Post Emissions (g/bhp-hr)	Reduction Efficiency
PM	0.02	0.003	85% PM Reduction
CO	0.39	0.078	80% CO Reducton
HC	0.01	0.003	70% HC Reduction
NOx	5.78	5.78	0% NOx Reduction

Table 3. System Data

Estimated Clean Pressure Drop	13”WC
Estimated Coated Filter DPF Pressure Drop at recommended Regeneration Time	22”WC
Allowable Engine Back Pressure	40.2”WC

Johnson Matthey has calculated the appropriate catalyst and filter volume based on the above Design Parameters. All operating conditions must be closely reviewed as different conditions may void the warranty.

2. THE EQUIPMENT DESCRIBED WILL BE SUPPLIED:

2.1 CARB 3+Verified Passive Diesel Particulate Filter

JM-CRT(+)-3-N-CS-BITO-10/10-LP

The diesel particulate filter is Johnson Matthey's patented Continuous Regenerating Technology (CRT) system. The diesel particulate filter is comprised of an oxidation catalyst(s) in direct series with a ceramic filter element(s). If our Carbon steel version (CS) is called out, they are painted with high-temperature black paint, which can rust in a cosmetic fashion, and is not warranted. If our Stainless steel (SS) version is called out it is not painted and is much more resistant to rust.

The organic particulate matter in the engine exhaust is comprised of carbon soot, soluble organic fraction (un-burnt HCs) and ash. The catalyst oxidizes the soluble organic fraction of PM to CO_2 and H_2O, oxidizes HC to CO_2 and H_2O, and some NO to NO_2. The NO_2 oxidizes the carbon soot that is collected downstream on the filter elements to CO_2, which regenerates the filter and called passive regeneration. Inorganic ash that is in the diesel exhaust will also be collected on the filter elements, and because this doesn't burn (oxidize) it necessitates the eventual cleaning of the filter elements (for standby operation, this cleaning of ash will not be necessary for many years). Exhaust sound silencing is integrated with the diesel particulate filter as one complete assembly.

2.2 SootAlert Module (Datalogger and Monitor)

A Johnson Matthey CARB Verified SootAlert is provided with each CRT(+). The SootAlert monitors, logs the operation of the DPF and predicts when the filters will need regeneration by providing a Yellow-Light indicator when regeneration is needed soon, and a Red-Light indicator when regeneration is required immediately. The SootAlert will monitor the regeneration and indicate that regeneration is complete by providing a Green Light indicator, at which time the filters have successfully been regenerated. The SootAlert includes an Ethernet port for remote monitoring of the status of the filters. Both digital and analog outputs are available for remote signaling.



2.3 Operation and Maintenance Manuals

Price includes electronic Operation and Maintenance manuals and approval drawing package.

JM

3. EXCLUSIONS

The following items are not included as part of this proposal:

- Electric Power
- External Insulation
- Engine exhaust piping, expansion joint(s), or external insulation of such
- Mounting hardware such as: supports, bolts, nuts and gaskets
- Support steel or bracing
- Foundations
- Drainage
- Mechanical or Electrical Installation
- Field Supervision
- Ducting and/or flex adapter from engine to DPF inlet
- Ducting from DPF to end of exhaust system
- Third Party Testing
- Shipping and taxes
- Any product or service not mentioned as supplied in this proposal, unless purchased as an option.

4. PRICING

Johnson Matthey proposes to supply the items as detailed in the Equipment section to perform the duties as detailed in the Design Parameters section for the price shown in Row 1 below. All prices are USD.

Table 4. Pricing Information

Price per DPF as described (SootAlert Monitor Included)	$17,788
Shipment (After return of approval drawings)	6-8 weeks
Optional Items:	
Optional Insulating Blankets for DPF (1 inch/2 inch) Purchased from WEPG	$2,316/$2,973
FCA	Point of Manufacture
Payment Terms	Net 30 days
Payment Schedule (upon credit approval)	100% upon shipment
Quote Validity	30 days

5. WARRANTY

Johnson Matthey warrants that the CARB verified CRT Particulate Filter System will meet the particulate matter reduction percentage as outlined in Table 2 Emissions Data when installed and operated in accordance with Johnson Matthey's Operation and Maintenance Manual and when operated on a diesel engine that meets the engine manufacture's specifications. Except to the limited extent provided by Section 11 of Johnson Matthey's General Terms and Conditions, no other warranties, express or implied, are provided.

The warranty for the CARB verified Passive Particulate Filter System supplied by Johnson Matthey is 60 months from date of shipment or 4,200 hours of engine operation, whichever occurs first. This warranty is subject to limited product warranty terms.

Please refer to the appendices for more details. This warranty is subject to the attached warranty terms. For carbon steel CRT units, the high temperature black paint finish does not guarantee rust from occurring. A stainless-steel version is available, as an option, for an additional price.

Johnson Matthey must be notified in writing upon system startup or the warranty will be void.

Johnson Matthey

CRT®(+) Diesel Particulate Filter System

Johnson Matthey Sets the Standard for Stationary Diesel Engine PM Emissions Control

Benefits:

- Reduces PM, HC and CO by over 90%
- Verified by CARB for emergency backup power and prime power stationary diesel engines
- Multiple-filter design enables the **CRT(+)** to be used on all engine sizes
- Modular filter design for ease of installation, routine service and easy maintenance
- Self-regeneration and filter cleaning for convenience and ease-of-use
- Passive-regen technology requires no supplemental heat or fuel
- For optimal performance, operates with ULSD (ultra low sulfur diesel) and B20 biodiesel fuels
- Each unit is equipped with the CRTdm diagnostic module, with data logging, back pressure alarm capability with computer interface
- Housed in stainless steel for strength and durability
- PM collection/filtration begins when engine starts and continues for the entire run time



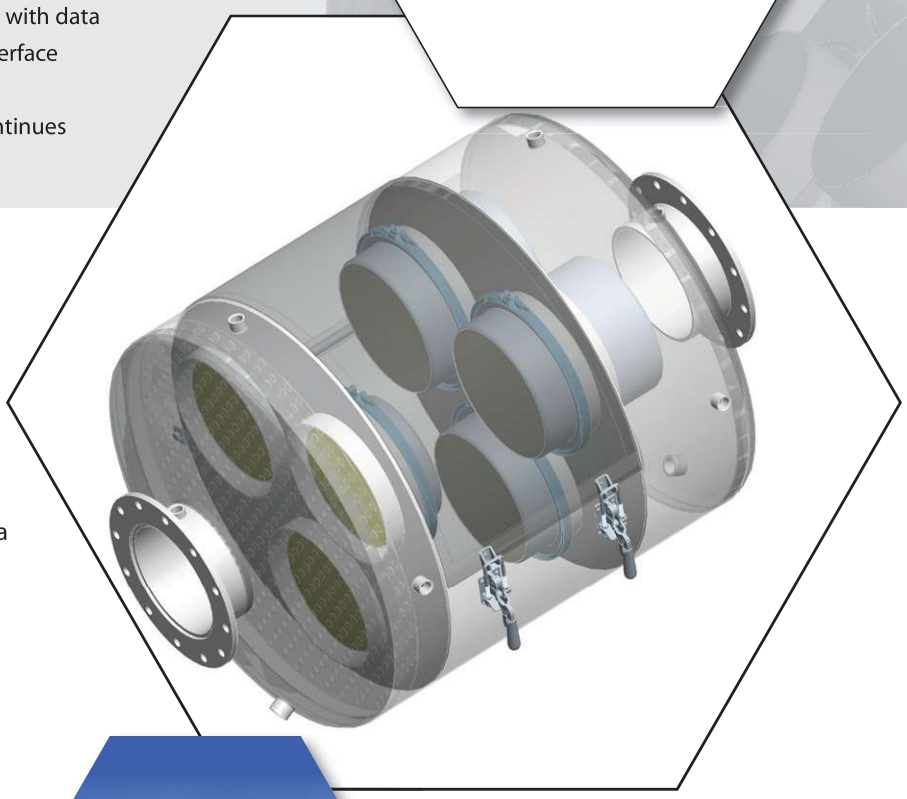

Johnson Matthey CRT®(+), Continuously Regenerating Technology

The **CRT®(+)** (Continuously Regenerating Technology) DPF is Johnson Matthey's patented technology for the control of emissions from diesel engines. It is the first PM control technology that can regenerate at an exhaust temperature of 465°F, making the **CRT(+)** the most efficient DPF available. The **CRT(+)** has been verified by the California Air Resources Board (CARB) for application to all stationary diesel engines used for generating power, including:

- Emergency Back-Up Power
- Prime Power

This advanced passive regenerating diesel particulate filter system not only reduces particulate matter (PM) by 90%, it also reduces hydrocarbon (HC) and carbon monoxide (CO) by 90% or more and meets the 2009 CARB NO_2 limit of 20%.



Engineering Innovation Makes the CRT(+) Uniquely Superior

Based on a number of unique design factors, the Johnson Matthey **CRT(+)** is engineered to ensure optimum effectiveness. While other filter systems may require a catalyst coating

JM

Johnson Matthey

Stationary Emissions Control

Suite 200, 400 Lapp Road, Malvern, PA 19355, USA

TEL: (484) 320-2136, FAX: (484) 320-2152

E-MAIL: info@jmsec.com

www.jmsec.com

Johnson Matthey

CRT®(+) Diesel Particulate Filter System

CARB verified for emergency backup power and prime power; meets NO_2 slip requirements

on the filter, Johnson Matthey employs a novel two-component design in which the catalyst is separate from the filter. This allows for maximum catalyst and filter performance. The catalyst is positioned before the filter to convert NO into NO_2. The NO_2 then oxidizes the soot that is collected on the filter to regenerate the filter. The NO_2 is more effective than oxygen in combusting the soot and at a much lower temperature than is normally required. In fact, the **CRT(+)** filter is regenerated at a temperature that is 20% lower than other filters on the market. This process of NO_2 soot combustion is the heart of the Johnson Matthey patent. The catalyst also converts CO and HC into CO_2 and water.

The significantly lower operating temperature of the Johnson Matthey **CRT(+)** is compatible with typical diesel exhaust temperatures, so no supplemental heat is required. Using a "flow-through" platinum coated catalyst, the soot travels directly through the catalyst and is collected on the filter. As a result, the catalyst is kept free of soot, ensuring that it performs at the highest level possible. Soot is trapped on the filter where it's then destroyed by the NO_2 produced by the catalyst. This coordinated operation between the catalyst and filter makes the **CRT(+)** highly efficient and effective.

What's more, the Johnson Matthey **CRT(+)** DPF utilizes passive regeneration to keep the filter clean during engine operation. By contrast, active-regen filter technologies require an external heat source such as fuel injection, burner or electricity. The potential to cause a fire is always a risk in an active-regen system. When compared to other passive-regen DPF technologies, the **CRT(+)** DPF can regenerate at engine exhaust temperatures well below all of the others, making the **CRT(+)** the most efficient DPF on the market today.

Proven Success

For 40 years, Johnson Matthey has been the global leader in the emissions control industry. When it comes to performance, Johnson Matthey's CRT technology has proven to be the superior solution for mobile and stationary diesel engines. It has been installed on more than 150,000 heavy duty diesel engines worldwide. The leader—Johnson Matthey—continues to be the best choice for all engine emissions control applications.

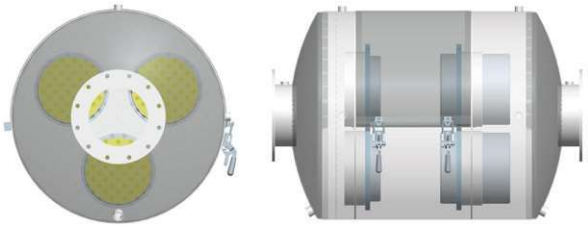

FILTER TECHNOLOGIES

Comparison of CARB verified particulate filter technologies for stationary diesel engines

	JOHNSON MATTHEY CRT®(+) FILTER SYSTEM	OTHER FILTER SYSTEMS
Filter technology	Catalyst + ceramic filter	Catalyzed ceramic filter or Burner and SiC filter
Regeneration technology and temperature	Passive: @ 240°C for 40% of duty cycle, or 5 hours @ 300°C after every 200 consecutive hours < 240°C	Passive: @ 300°C for 30% of duty cycle or 2 hours, whichever is longer Active regeneration required: 0.1 PM : < 375°C 0.2 PM : < 405°C 0.3 PM : < 420°C 0.4 PM : < 435°C
NOx / PM Ratio	15 @ > 300°C 20 @ < 300°C	
Meets CARB 2009 20% NO_2 limit	Yes	No
Full CARB Verification	• Emergency backup • Prime (conditional)	• Emergency backup
Diesel engine family applicability	≤ 0.4 g/bhp-hr PM	Passive: ≤ 0.1 g/bhp-hr PM Active: ≤ 0.4 g/bhp-hr PM
Verification level	3 (> 85% PM reduction)	3 (> 85% PM reduction)
Maximum consecutive minutes at idle	720	Passive 240 Active 720
# of cold starts idle time after each cold start	24 30 minutes	12 to 24 10 to 30 minutes
Max. hours before filter cleaning	8000 depending on hours of usage	2000 to 5000 project specific
Fuel	<15 ppm sulfur or biodiesel (20%)	Similar or less accepting

Johnson Matthey
Stationary Emissions Control

Suite 200, 400 Lapp Road, Malvern, PA 19355, USA
TEL: (484) 320-2136, FAX: (484) 320-2152
E-MAIL: info@jmsec.com

©2009 Johnson Matthey

REVISIONS					
REV.	DATE	DESCRIPTION	BY	ENG	APPROVED
0	10/12/16	INITIAL RELEASE	M.D.C.		EJB 8/11/17
1	5/25/2018	REVISED TITLE BLOCK & TOLERANCE BLOCK	M.D.C.		EJB 9/17/18

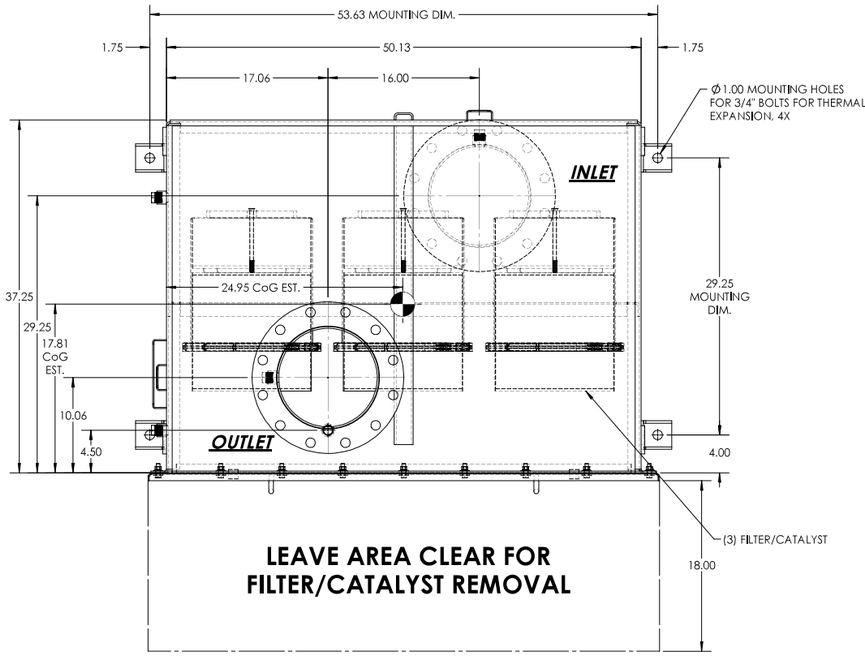

PLAN VIEW

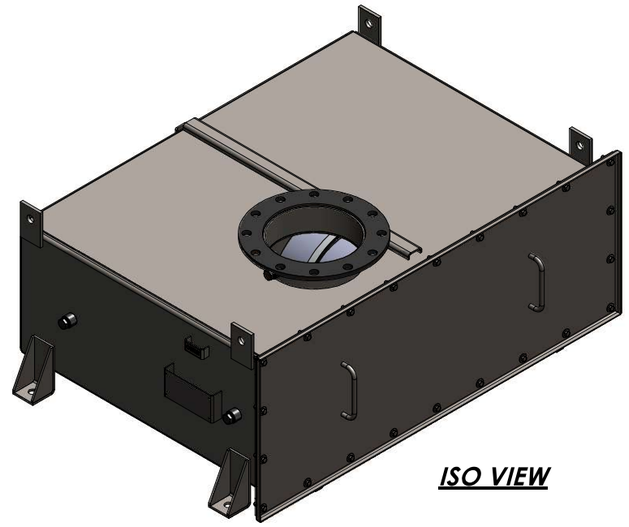

ISO VIEW

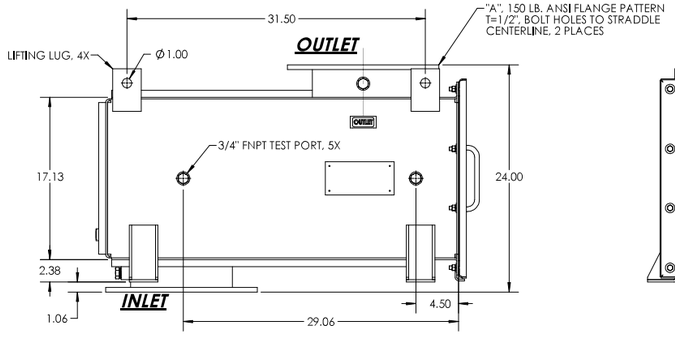

ELEVATION SIDE VIEW

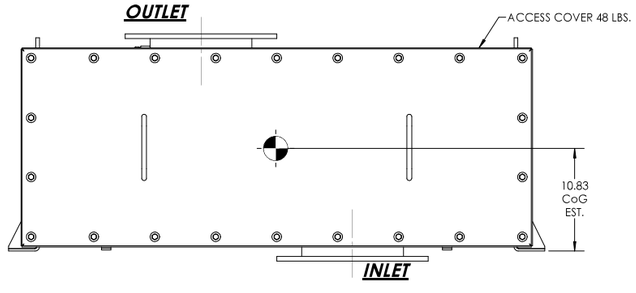

ELEVATION FRONT VIEW

FLANGE CONFIGURATION AND PART NUMBER		
FLANGE SIZE "A"	CS PART NO.	SS PART NO.
8	18971	190661
10	18972	190662

* BOLD FLANGE SIZE SHOWN

NOTES:

1. WEIGHT IS ESTIMATED AND IS BASED UPON THE SHOWN CONFIGURATION.
2. ESTIMATED SOUND ATTENUATION: CRITICAL GRADE 25-30 dBA.
3. ALL WELDING TO BE IN ACCORDANCE WITH WELDING GUIDELINES, SEE DRAWING 609826.
4. MATERIAL (MS): 7 GA. ASTM A36 CARBON STEEL or 304 STAINLESS STEEL.
5. FINISH: HIGH TEMPERATURE BLACK PAINT TO HOUSING AND FLANGES (CARBON STEEL ONLY). PER JM PAINT SPEC SEC-EN-P-026.
6. PIPE DIAMETER OF CUSTOMER'S EXHAUST LINE(S) SHALL BE NO LESS THAN THE FLOW AREA OF THE INLET CONNECTION(S) PROVIDED BY JOHNSON MATTHEY.
7. JM BACKPRESSURE GUARANTEE EXTENDS FROM THE CRT INLET CONNECTION TO THE CRT OUTLET CONNECTION ONLY. CUSTOMER IS RESPONSIBLE FOR BACKPRESSURE OR PRESSURE DROP OF ALL OTHER COMPONENTS IN THE ENGINE EXHAUST SYSTEM.

STANDARD TOLERANCES UNLESS SPECIFIED OTHERWISE [ ] ALTERNATE DIMENSION UNITS ARE FOR REFERENCE ONLY.					
MACHINING				GENERAL FABRICATION	
0.0	±0.0300"	FRACTIONS	±1/16"	< 36"	±1/16"
0.00	±0.0150	ANGLES	±0.5°	36-140"	±1/8"
0.000	±0.0050	SURFACE FINISH	125 µ"AA	> 140"	±1/4"
FILLETS SHOWN SHARP = .03"R MAX.				ANGLES	±0.5°
BREAK CORNERS .03" X 45° CHAMFER					
TAPPED HOLES - MIN. DEPTH FOR FULL THREADS = 1.8 X DIAMETER CHAMFER ALL TAPPED HOLES TO ROOT OF FIRST THREAD					
ALL DIMENSIONS ARE INCHES UNLESS SPECIFIED OTHERWISE					

SUPPORTING THE HOUSING:

THE HOUSING SHALL BE SUPPORTED WITH AT LEAST 2 BEAMS RUNNING UNDERNEATH THE FEET. THESE BEAMS SHALL BE DESIGNED FOR THE HOUSING THERMAL EXPANSION AND WEIGHT. IF A FIXED POINT ON THE HOUSING IS REQUIRED PLEASE SET STATIONARY ONE "CORNER" ONLY AND LET THE OTHER (3) "CORNERS" EXPAND (THERMAL GROWTH). AN EXPANSION JOINT IS TYPICALLY REQUIRED ON THE INLET FLANGED CONNECTION.

Shipping Dims		
Length L"	Width W "	Height H "
Material		
Finish		
Weight (lbs) 631	Model Rev.	

THIS DRAWING IS OUR PROPERTY AND ALL THE INFORMATION CONTAINED THEREON IS TO BE KEPT CONFIDENTIAL BY THE RECIPIENT AND NOT TO BE USED OR DISCLOSED TO ANY OTHER PERSON, FIRM OR CORPORATION WITHOUT OUR EXPRESS CONSENT; AND THIS DRAWING SHALL NOT BE USED, DIRECTLY OR INDIRECTLY, EXCEPT IN CONNECTION WITH OUR WORK. ALL RIGHTS OF DESIGN OR INVENTION ARE PRESERVED

Johnson Matthey
Inspiring science, enhancing life

CRT(+) 3-N-MS-BITO-A/A-LP GENERAL ARRANGEMENT

DRAWN BY	CHECKED	DATE	WHERE USED	DISCIP.	PROJECTION: THIRD ANGLE	SHEET NO.	SIZE
MDC	EJB	10-12-16				1 OF 6	D
ENGINEER	APPROVED	SCALE	EWR NO.	SO NO.	DRAWING NO.		SHT. REV.
	BAT	1:8			609843 -1-		1

C:\JM Environmental\SEC\Americas\Audubon\Standards Products\sBRxx - CRT & SDPF\CRT_SDPF_GEN 2\Engineering\Fabrication Drawing\609843 (CRT 11HBU &BITO LP) Wednesday, October 03, 2018 12:21:14 PM

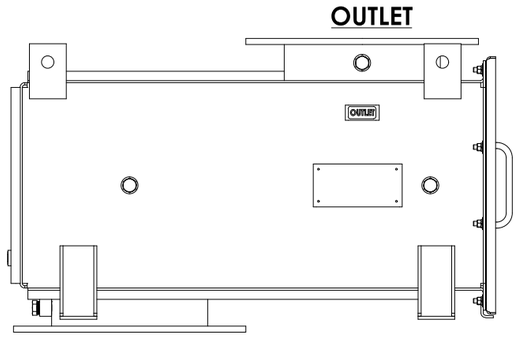

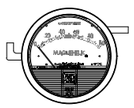



GAGE
SIDE AND BACK VIEW

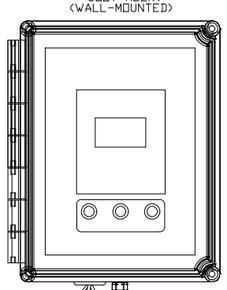

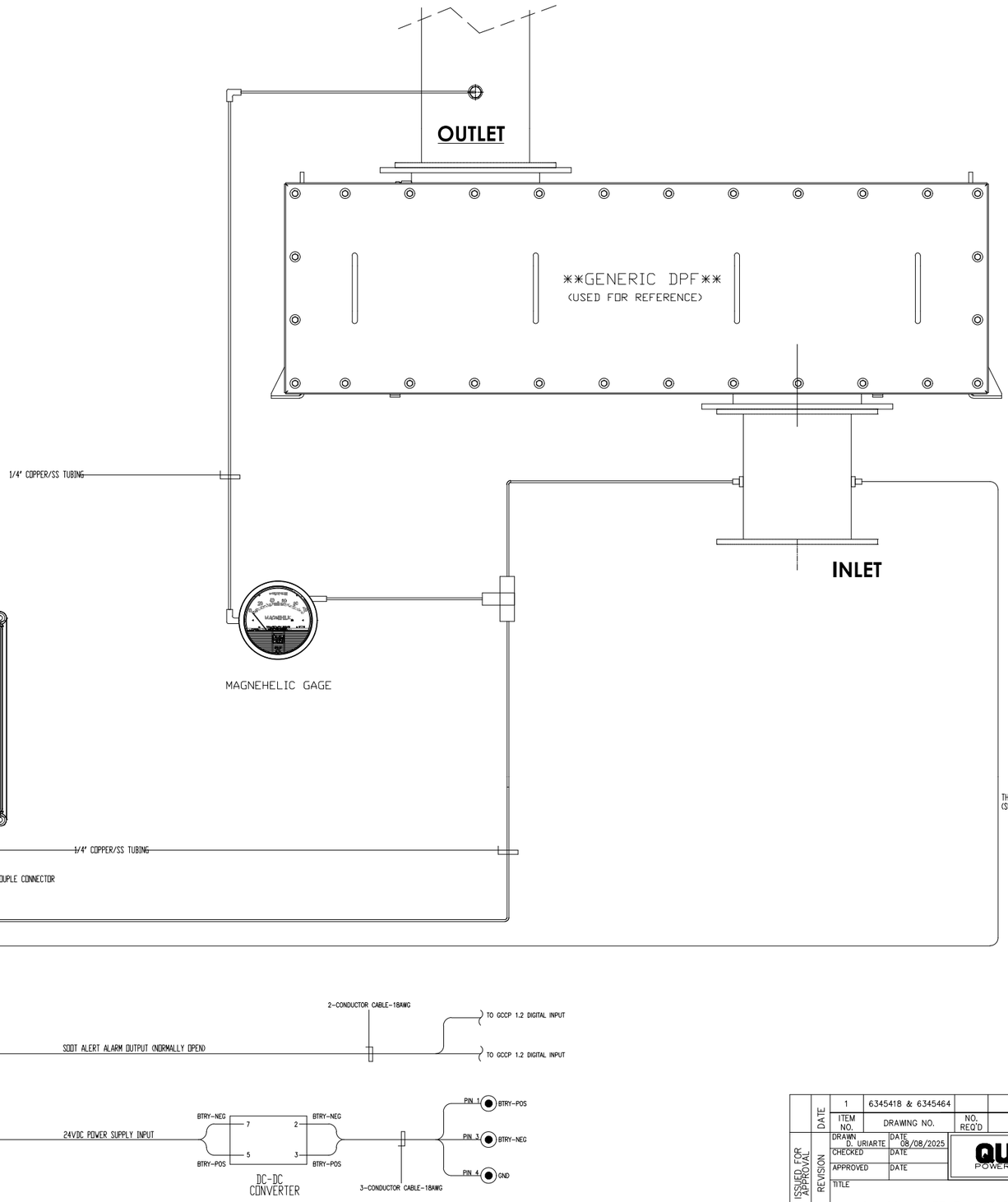

NOTES/LEGEND:

- GENSET AC TERMINAL STRIP
- EMCP DC TERMINAL STRIP

NO.	REVISION	DATE	ITEM NO.	DRAWING NO.	NO. REQ'D	MATERIAL DESCRIPTION	REMARKS
0	ISSUED FOR APPROVAL		1	6345418 & 6345464		GCCP 1.2	CATERPILLAR

DRAWN: D. URIARTE — DATE: 08/08/2025
CHECKED — DATE
APPROVED — DATE

QUINN POWER SYSTEMS | CAT

656 E LA CADENA DR.
RIVERSIDE, CA 92507

TITLE: JOHNSON MATTHEY DPF PANEL INTERFACE
SCALE: NONE
JOB: 240171 – CITY OF REDLANDS
DWG NO. E240171

JOHNSON MATTHEY
PASSIVE DPF

Passive DPF

Johnson Matthey SEC LLC
900 Forge Avenue, Suite 100
Audubon, PA 19403
T 484-320-2131

6/25/2025
Attention: Art Jimenez
Quinn Power
656 East La Cadena Dr., Riverside, CA 92507

Re: Proposal No. DW-3164 for Johnson Matthey Passive Diesel Particulate Filter for City of Redlands

Dear Mr. Jimenez:

Thank you for considering Johnson Matthey for your emissions control needs. We are pleased to provide this proposal for a California Air Resources Board (CARB) Level 3+ verified Johnson Matthey diesel particulate filter. This offering can be used for either standby or prime power applications and includes critical grade silencing grade silencing to simultaneously control PM, CO, HC and sound emissions from the C15 engine. This patented system incorporates precious metal catalyst and particulate filter components that are engineered as a totally passive system,

This proposal conforms to amended California Air Resources Board (CARB) regulations for Verified Diesel Emission Control Strategies that have been implemented by CARB.

which does not require supplemental heat or electricity.

For additional information about this product and other Johnson Matthey emission solutions, please visit www.jmsec.com or contact us if you have any questions or comments.

Sincerely,



Robert Bono
Western US Regional Manager, Stationary Emissions Control, LLC

949-307-1265 mobile
bonorp@jmusa.com

Johnson Matthey Public Limited Company. 5th Floor, 25 Farringdon Street, London EC4A 4AB.
Registered in England No. 33774

JM

1. DESIGN PARAMETERS

The following conditions were used to design and assure the passive Diesel Particulate Filter with critical grade silencing Grade Silencer will meet the project requirement:

Table 1. Full Load Design Parameters

Engine	Caterpillar C15
Application	Power Generation
Generator Capacity -kW	500
RPM	1800
Load	100%
Operating Hours per Year	Standby Use
Number of Diesel Particulate Filter Units	1
Type of Fuel	ULSD
Design Exhaust Flow Rate and Temperature at Full Load	3,842 CFM @ 942°F

Table 2. Full Load Emissions Data

Exhaust Component	Pre Emissions (g/bhp-hr)	Post Emissions (g/bhp-hr)	Reduction Efficiency
PM	0.02	0.003	85% PM Reduction
CO	0.39	0.078	80% CO Reducton
HC	0.01	0.003	70% HC Reduction
NOx	5.78	5.78	0% NOx Reduction

Table 3. System Data

Estimated Clean Pressure Drop	13”WC
Estimated Coated Filter DPF Pressure Drop at recommended Regeneration Time	22”WC
Allowable Engine Back Pressure	40.2”WC

Johnson Matthey has calculated the appropriate catalyst and filter volume based on the above Design Parameters. All operating conditions must be closely reviewed as different conditions may void the warranty.

2. THE EQUIPMENT DESCRIBED WILL BE SUPPLIED:

2.1 CARB 3+Verified Passive Diesel Particulate Filter

JM-CRT(+)-3-N-CS-BITO-10/10-LP

The diesel particulate filter is Johnson Matthey's patented Continuous Regenerating Technology (CRT) system. The diesel particulate filter is comprised of an oxidation catalyst(s) in direct series with a ceramic filter element(s). If our Carbon steel version (CS) is called out, they are painted with high-temperature black paint, which can rust in a cosmetic fashion, and is not warranted. If our Stainless steel (SS) version is called out it is not painted and is much more resistant to rust.

The organic particulate matter in the engine exhaust is comprised of carbon soot, soluble organic fraction (un-burnt HCs) and ash. The catalyst oxidizes the soluble organic fraction of PM to CO_2 and H_2O, oxidizes HC to CO_2 and H_2O, and some NO to NO_2. The NO_2 oxidizes the carbon soot that is collected downstream on the filter elements to CO_2, which regenerates the filter and called passive regeneration. Inorganic ash that is in the diesel exhaust will also be collected on the filter elements, and because this doesn't burn (oxidize) it necessitates the eventual cleaning of the filter elements (for standby operation, this cleaning of ash will not be necessary for many years). Exhaust sound silencing is integrated with the diesel particulate filter as one complete assembly.

2.2 SootAlert Module (Datalogger and Monitor)

A Johnson Matthey CARB Verified SootAlert is provided with each CRT(+). The SootAlert monitors, logs the operation of the DPF and predicts when the filters will need regeneration by providing a Yellow-Light indicator when regeneration is needed soon, and a Red-Light indicator when regeneration is required immediately. The SootAlert will monitor the regeneration and indicate that regeneration is complete by providing a Green Light indicator, at which time the filters have successfully been regenerated. The SootAlert includes an Ethernet port for remote monitoring of the status of the filters. Both digital and analog outputs are available for remote signaling.



2.3 Operation and Maintenance Manuals

Price includes electronic Operation and Maintenance manuals and approval drawing package.

JM

3. EXCLUSIONS

The following items are not included as part of this proposal:

- Electric Power
- External Insulation
- Engine exhaust piping, expansion joint(s), or external insulation of such
- Mounting hardware such as: supports, bolts, nuts and gaskets
- Support steel or bracing
- Foundations
- Drainage
- Mechanical or Electrical Installation
- Field Supervision
- Ducting and/or flex adapter from engine to DPF inlet
- Ducting from DPF to end of exhaust system
- Third Party Testing
- Shipping and taxes
- Any product or service not mentioned as supplied in this proposal, unless purchased as an option.

4. PRICING

Johnson Matthey proposes to supply the items as detailed in the Equipment section to perform the duties as detailed in the Design Parameters section for the price shown in Row 1 below. All prices are USD.

Table 4. Pricing Information

Price per DPF as described (SootAlert Monitor Included)	$17,788
Shipment (After return of approval drawings)	6-8 weeks
Optional Items:	
Optional Insulating Blankets for DPF (1 inch/2 inch) Purchased from WEPG	$2,316/$2,973
FCA	Point of Manufacture
Payment Terms	Net 30 days
Payment Schedule (upon credit approval)	100% upon shipment
Quote Validity	30 days

5. WARRANTY

Johnson Matthey warrants that the CARB verified CRT Particulate Filter System will meet the particulate matter reduction percentage as outlined in Table 2 Emissions Data when installed and operated in accordance with Johnson Matthey's Operation and Maintenance Manual and when operated on a diesel engine that meets the engine manufacture's specifications. Except to the limited extent provided by Section 11 of Johnson Matthey's General Terms and Conditions, no other warranties, express or implied, are provided.

The warranty for the CARB verified Passive Particulate Filter System supplied by Johnson Matthey is 60 months from date of shipment or 4,200 hours of engine operation, whichever occurs first. This warranty is subject to limited product warranty terms.

Please refer to the appendices for more details. This warranty is subject to the attached warranty terms. For carbon steel CRT units, the high temperature black paint finish does not guarantee rust from occurring. A stainless-steel version is available, as an option, for an additional price.

Johnson Matthey must be notified in writing upon system startup or the warranty will be void.

Johnson Matthey

CRT®(+) Diesel Particulate Filter System

Johnson Matthey Sets the Standard for Stationary Diesel Engine PM Emissions Control

Benefits:

- Reduces PM, HC and CO by over 90%
- Verified by CARB for emergency backup power and prime power stationary diesel engines
- Multiple-filter design enables the **CRT(+)** to be used on all engine sizes
- Modular filter design for ease of installation, routine service and easy maintenance
- Self-regeneration and filter cleaning for convenience and ease-of-use
- Passive-regen technology requires no supplemental heat or fuel
- For optimal performance, operates with ULSD (ultra low sulfur diesel) and B20 biodiesel fuels
- Each unit is equipped with the CRTdm diagnostic module, with data logging, back pressure alarm capability with computer interface
- Housed in stainless steel for strength and durability
- PM collection/filtration begins when engine starts and continues for the entire run time



Johnson Matthey CRT®(+), Continuously Regenerating Technology

The **CRT®(+)** (Continuously Regenerating Technology) DPF is Johnson Matthey's patented technology for the control of emissions from diesel engines. It is the first PM control technology that can regenerate at an exhaust temperature of 465°F, making the **CRT(+)** the most efficient DPF available. The **CRT(+)** has been verified by the California Air Resources Board (CARB) for application to all stationary diesel engines used for generating power, including:

- Emergency Back-Up Power
- Prime Power

This advanced passive regenerating diesel particulate filter system not only reduces particulate matter (PM) by 90%, it also reduces hydrocarbon (HC) and carbon monoxide (CO) by 90% or more and meets the 2009 CARB NO_2 limit of 20%.



Engineering Innovation Makes the CRT(+) Uniquely Superior

Based on a number of unique design factors, the Johnson Matthey **CRT(+)** is engineered to ensure optimum effectiveness. While other filter systems may require a catalyst coating

Johnson Matthey
Stationary Emissions Control

Suite 200, 400 Lapp Road, Malvern, PA 19355, USA
TEL: (484) 320-2136, FAX: (484) 320-2152
E-MAIL: info@jmsec.com

www.jmsec.com

Johnson Matthey

CRT®(+) Diesel Particulate Filter System

CARB verified for emergency backup power and prime power; meets NO_2 slip requirements

on the filter, Johnson Matthey employs a novel two-component design in which the catalyst is separate from the filter. This allows for maximum catalyst and filter performance. The catalyst is positioned before the filter to convert NO into NO_2. The NO_2 then oxidizes the soot that is collected on the filter to regenerate the filter. The NO_2 is more effective than oxygen in combusting the soot and at a much lower temperature than is normally required. In fact, the **CRT(+)** filter is regenerated at a temperature that is 20% lower than other filters on the market. This process of NO_2 soot combustion is the heart of the Johnson Matthey patent. The catalyst also converts CO and HC into CO_2 and water.

The significantly lower operating temperature of the Johnson Matthey **CRT(+)** is compatible with typical diesel exhaust temperatures, so no supplemental heat is required. Using a "flow-through" platinum coated catalyst, the soot travels directly through the catalyst and is collected on the filter. As a result, the catalyst is kept free of soot, ensuring that it performs at the highest level possible. Soot is trapped on the filter where it's then destroyed by the NO_2 produced by the catalyst. This coordinated operation between the catalyst and filter makes the **CRT(+)** highly efficient and effective.

What's more, the Johnson Matthey **CRT(+)** DPF utilizes passive regeneration to keep the filter clean during engine operation. By contrast, active-regen filter technologies require an external heat source such as fuel injection, burner or electricity. The potential to cause a fire is always a risk in an active-regen system. When compared to other passive-regen DPF technologies, the **CRT(+)** DPF can regenerate at engine exhaust temperatures well below all of the others, making the **CRT(+)** the most efficient DPF on the market today.

Proven Success

For 40 years, Johnson Matthey has been the global leader in the emissions control industry. When it comes to performance, Johnson Matthey's CRT technology has proven to be the superior solution for mobile and stationary diesel engines. It has been installed on more than 150,000 heavy duty diesel engines worldwide. The leader—Johnson Matthey—continues to be the best choice for all engine emissions control applications.

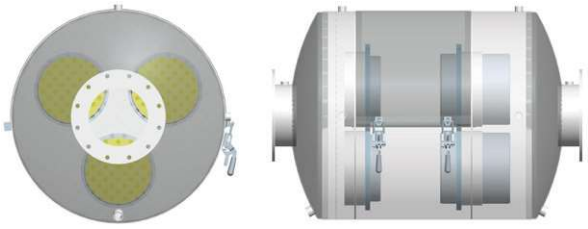

FILTER TECHNOLOGIES

Comparison of CARB verified particulate filter technologies for stationary diesel engines

	JOHNSON MATTHEY CRT®(+) FILTER SYSTEM	OTHER FILTER SYSTEMS
Filter technology	Catalyst + ceramic filter	Catalyzed ceramic filter or Burner and SiC filter
Regeneration technology and temperature	Passive: @ 240°C for 40% of duty cycle, or 5 hours @ 300°C after every 200 consecutive hours < 240°C	Passive: @ 300°C for 30% of duty cycle or 2 hours, whichever is longer Active regeneration required: 0.1 PM : < 375°C 0.2 PM : < 405°C 0.3 PM : < 420°C 0.4 PM : < 435°C
NOx / PM Ratio	15 @ > 300°C 20 @ < 300°C	
Meets CARB 2009 20% NO_2 limit	Yes	No
Full CARB Verification	• Emergency backup • Prime (conditional)	• Emergency backup
Diesel engine family applicability	≤ 0.4 g/bhp-hr PM	Passive: ≤ 0.1 g/bhp-hr PM Active: ≤ 0.4 g/bhp-hr PM
Verification level	3 (> 85% PM reduction)	3 (> 85% PM reduction)
Maximum consecutive minutes at idle	720	Passive 240 Active 720
# of cold starts idle time after each cold start	24 30 minutes	12 to 24 10 to 30 minutes
Max. hours before filter cleaning	8000 depending on hours of usage	2000 to 5000 project specific
Fuel	<15 ppm sulfur or biodiesel (20%)	Similar or less accepting

Johnson Matthey
Stationary Emissions Control

Suite 200, 400 Lapp Road, Malvern, PA 19355, USA
TEL: (484) 320-2136, FAX: (484) 320-2152
E-MAIL: info@jmsec.com

©2009 Johnson Matthey

REVISIONS					
REV.	DATE	DESCRIPTION	BY	ENG	APPROVED
0	10/12/16	INITIAL RELEASE	M.D.C.		EJB 8/11/17
1	5/25/2018	REVISED TITLE BLOCK & TOLERANCE BLOCK	M.D.C.		EJB 9/17/18

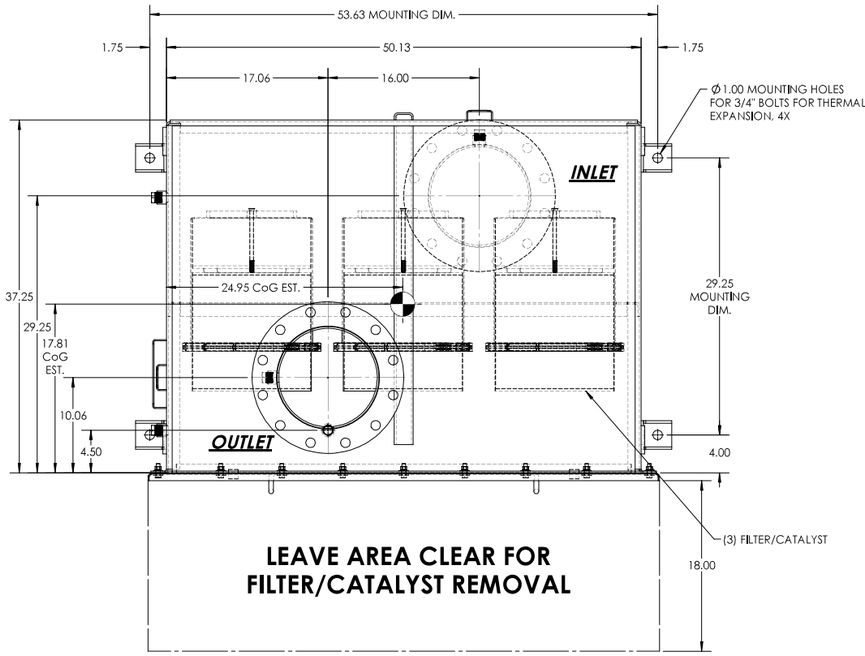

PLAN VIEW

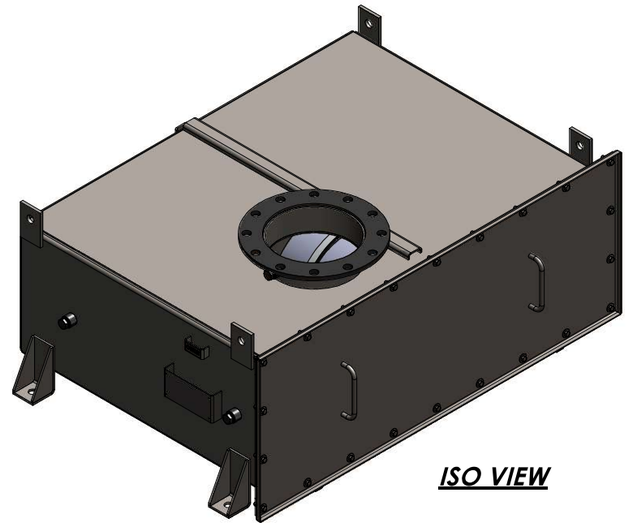

ISO VIEW

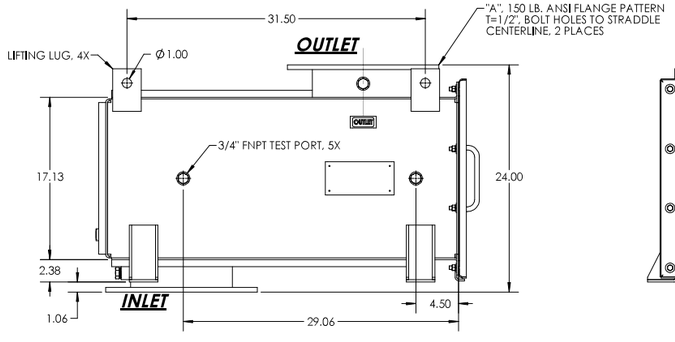

ELEVATION SIDE VIEW

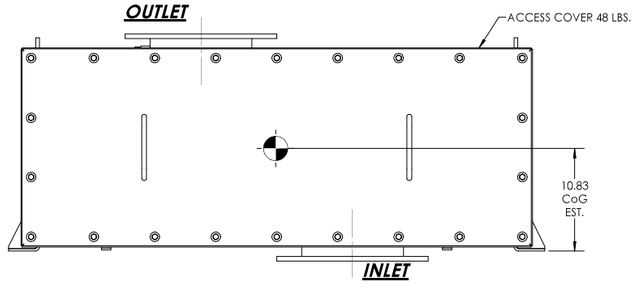

ELEVATION FRONT VIEW

FLANGE CONFIGURATION AND PART NUMBER		
FLANGE SIZE "A"	CS PART NO.	SS PART NO.
8	18971	190661
10	18972	190662

* BOLD FLANGE SIZE SHOWN

NOTES:

1. WEIGHT IS ESTIMATED AND IS BASED UPON THE SHOWN CONFIGURATION.
2. ESTIMATED SOUND ATTENUATION: CRITICAL GRADE 25-30 dBA.
3. ALL WELDING TO BE IN ACCORDANCE WITH WELDING GUIDELINES, SEE DRAWING 609826.
4. MATERIAL (MS): 7 GA. ASTM A36 CARBON STEEL or 304 STAINLESS STEEL.
5. FINISH: HIGH TEMPERATURE BLACK PAINT TO HOUSING AND FLANGES (CARBON STEEL ONLY). PER JM PAINT SPEC SEC-EN-P-026.
6. PIPE DIAMETER OF CUSTOMER'S EXHAUST LINE(S) SHALL BE NO LESS THAN THE FLOW AREA OF THE INLET CONNECTION(S) PROVIDED BY JOHNSON MATTHEY.
7. JM BACKPRESSURE GUARANTEE EXTENDS FROM THE CRT INLET CONNECTION TO THE CRT OUTLET CONNECTION ONLY. CUSTOMER IS RESPONSIBLE FOR BACKPRESSURE OR PRESSURE DROP OF ALL OTHER COMPONENTS IN THE ENGINE EXHAUST SYSTEM.

STANDARD TOLERANCES UNLESS SPECIFIED OTHERWISE [ ] ALTERNATE DIMENSION UNITS ARE FOR REFERENCE ONLY.					
MACHINING				GENERAL FABRICATION	
0.0	±0.0300"	FRACTIONS	±1/16"	< 36"	±1/16"
0.00	±0.0150	ANGLES	±0.5°	36-140"	±1/8"
0.000	±0.0050	SURFACE FINISH	125 µ"AA	> 140"	±1/4"
FILLETS SHOWN SHARP = .03"R MAX.				ANGLES	±0.5°
BREAK CORNERS .03" X 45° CHAMFER					
TAPPED HOLES - MIN. DEPTH FOR FULL THREADS = 1.8 X DIAMETER CHAMFER ALL TAPPED HOLES TO ROOT OF FIRST THREAD					
ALL DIMENSIONS ARE INCHES UNLESS SPECIFIED OTHERWISE					

SUPPORTING THE HOUSING:

THE HOUSING SHALL BE SUPPORTED WITH AT LEAST 2 BEAMS RUNNING UNDERNEATH THE FEET. THESE BEAMS SHALL BE DESIGNED FOR THE HOUSING THERMAL EXPANSION AND WEIGHT. IF A FIXED POINT ON THE HOUSING IS REQUIRED PLEASE SET STATIONARY ONE "CORNER" ONLY AND LET THE OTHER (3) "CORNERS" EXPAND (THERMAL GROWTH). AN EXPANSION JOINT IS TYPICALLY REQUIRED ON THE INLET FLANGED CONNECTION.

Shipping Dims		
Length L"	Width W "	Height H "
Material		
Finish		
Weight (lbs) 631	Model Rev.	

THIS DRAWING IS OUR PROPERTY AND ALL THE INFORMATION CONTAINED THEREON IS TO BE KEPT CONFIDENTIAL BY THE RECIPIENT AND NOT TO BE USED OR DISCLOSED TO ANY OTHER PERSON, FIRM OR CORPORATION WITHOUT OUR EXPRESS CONSENT; AND THIS DRAWING SHALL NOT BE USED, DIRECTLY OR INDIRECTLY, EXCEPT IN CONNECTION WITH OUR WORK. ALL RIGHTS OF DESIGN OR INVENTION ARE PRESERVED

Johnson Matthey
Inspiring science, enhancing life

CRT(+) 3-N-MS-BITO-A/A-LP GENERAL ARRANGEMENT

DRAWN BY	CHECKED	DATE	WHERE USED	DISCP.	PROJECTION: THIRD ANGLE	SHEET NO.	SIZE
MDC	EJB	10-12-16				1 OF 6	D
ENGINEER	APPROVED	SCALE	EWR NO.	SO NO.	DRAWING NO.		SHT. REV.
	BAT	1:8			609843 -1-		1

C:\JM Environmental\SEC\America\Audubon\Standards Products\sBPxx - CRT & SDPF\CRT_SDPF_GEN 2\Engineering\Fabrication Drawing\609843 (CRT) TWBU &BITO LP\ Wednesday, October 03, 2018 12:21:4 PM

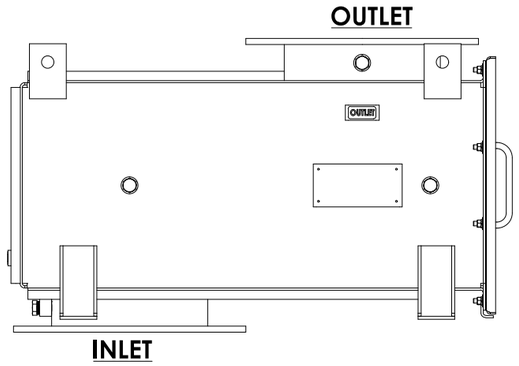

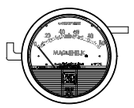



GAGE
SIDE AND BACK VIEW

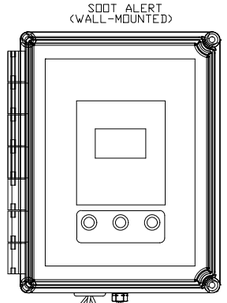

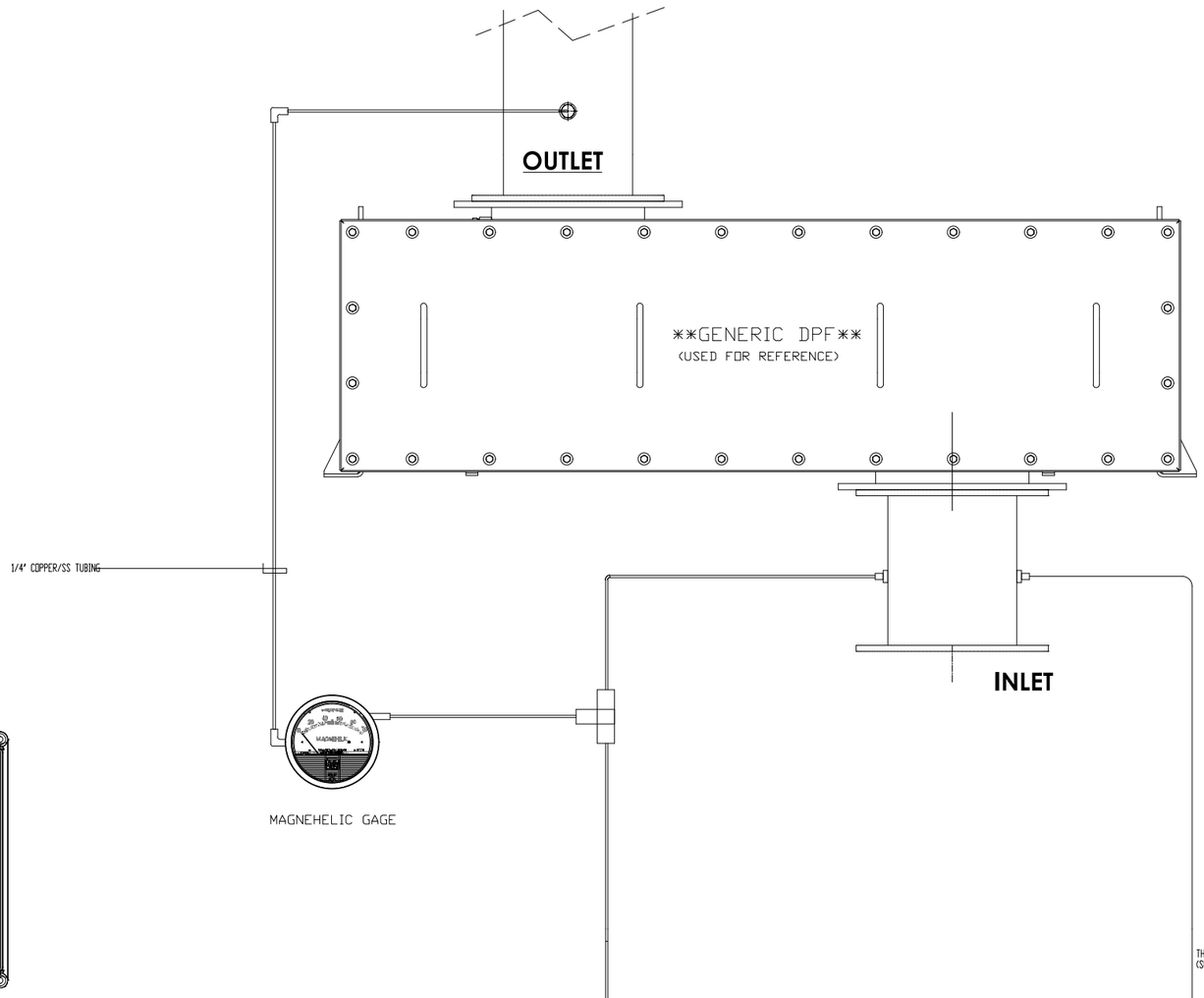

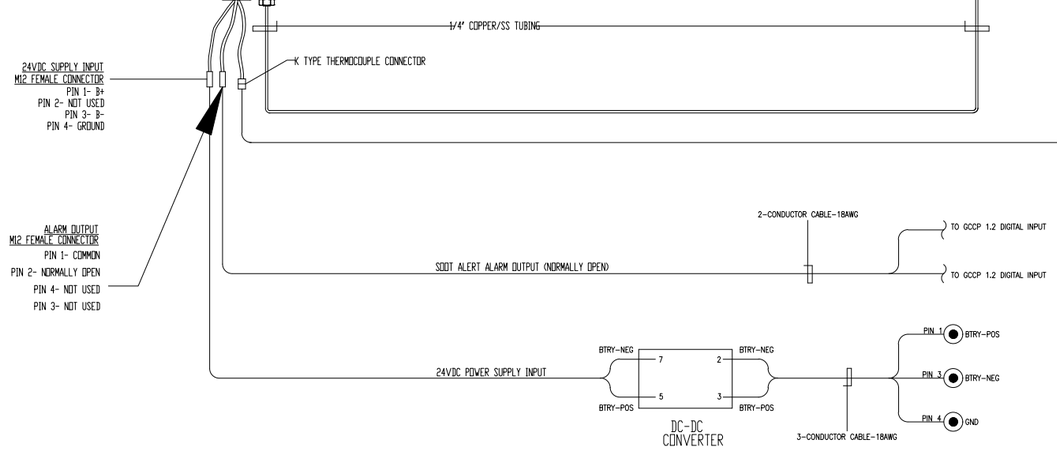

NOTES/LEGEND:

- GENSET AC TERMINAL STRIP
- EMCP DC TERMINAL STRIP

NO.	DATE	ITEM NO.	DRAWING NO.	NO. REQ'D	MATERIAL DESCRIPTION	REMARKS
0	ISSUED FOR APPROVAL	1	6345418 & 6345464		GCCP 1.2	CATERPILLAR

DRAWN: D. URIARTE — DATE: 08/08/2025
CHECKED — DATE
APPROVED — DATE
TITLE: JOHNSON MATTHEY DPF PANEL INTERFACE
SCALE: NONE
QUINN POWER SYSTEMS
656 E LA CADENA DR.
RIVERSIDE, CA 92507
JOB: 240171 - CITY OF REDLANDS
DWG NO. E240171

JOHNSON MATTHEY
PASSIVE DPF

Passive DPF

Johnson Matthey SEC LLC
900 Forge Avenue, Suite 100
Audubon, PA 19403
T 484-320-2131

6/25/2025
Attention: Art Jimenez
Quinn Power
656 East La Cadena Dr., Riverside, CA 92507

Re: Proposal No. DW-3163 for Johnson Matthey Passive Diesel Particulate Filter for City of Redlands

Dear Mr. Jimenez:

Thank you for considering Johnson Matthey for your emissions control needs. We are pleased to provide this proposal for a California Air Resources Board (CARB) Level 3+ verified Johnson Matthey diesel particulate filter. This offering can be used for either standby or prime power applications and includes critical grade silencing grade silencing to simultaneously control PM, CO, HC and sound emissions from the C15 engine. This patented system incorporates precious metal catalyst and particulate filter components that are engineered as a totally passive system,

This proposal conforms to amended California Air Resources Board (CARB) regulations for Verified Diesel Emission Control Strategies that have been implemented by CARB.

which does not require supplemental heat or electricity.

For additional information about this product and other Johnson Matthey emission solutions, please visit www.jmsec.com or contact us if you have any questions or comments.

Sincerely,



Robert Bono
Western US Regional Manager, Stationary Emissions Control, LLC

949-307-1265 mobile
bonorp@jmusa.com

Johnson Matthey Public Limited Company. 5th Floor, 25 Farringdon Street, London EC4A 4AB.
Registered in England No. 33774

JM

1. DESIGN PARAMETERS

The following conditions were used to design and assure the passive Diesel Particulate Filter with critical grade silencing Grade Silencer will meet the project requirement:

Table 1. Full Load Design Parameters

Engine	Caterpillar C15
Application	Power Generation
Generator Capacity -kW	400
RPM	1800
Load	100%
Operating Hours per Year	Standby Use
Number of Diesel Particulate Filter Units	1
Type of Fuel	ULSD
Design Exhaust Flow Rate and Temperature at Full Load	3,655 CFM @ 910°F

Table 2. Full Load Emissions Data

Exhaust Component	Pre Emissions (g/bhp-hr)	Post Emissions (g/bhp-hr)	Reduction Efficiency
PM	0.034	0.0051	85% PM Reduction
CO	0.35	0.07	80% CO Reducton
HC	0.04	0.012	70% HC Reduction
NOx	3.49	3.49	0% NOx Reduction

Table 3. System Data

Estimated Clean Pressure Drop	13.1”WC
Estimated Coated Filter DPF Pressure Drop at recommended Regeneration Time	22.1”WC
Allowable Engine Back Pressure	40.2”WC

Johnson Matthey has calculated the appropriate catalyst and filter volume based on the above Design Parameters. All operating conditions must be closely reviewed as different conditions may void the warranty.

2. THE EQUIPMENT DESCRIBED WILL BE SUPPLIED:

2.1 CARB 3+Verified Passive Diesel Particulate Filter

JM-CRT(+)-3-N-CS-BITO-10/10-LP

The diesel particulate filter is Johnson Matthey's patented Continuous Regenerating Technology (CRT) system. The diesel particulate filter is comprised of an oxidation catalyst(s) in direct series with a ceramic filter element(s). If our Carbon steel version (CS) is called out, they are painted with high-temperature black paint, which can rust in a cosmetic fashion, and is not warranted. If our Stainless steel (SS) version is called out it is not painted and is much more resistant to rust.

The organic particulate matter in the engine exhaust is comprised of carbon soot, soluble organic fraction (un-burnt HCs) and ash. The catalyst oxidizes the soluble organic fraction of PM to CO_2 and H_2O, oxidizes HC to CO_2 and H_2O, and some NO to NO_2. The NO_2 oxidizes the carbon soot that is collected downstream on the filter elements to CO_2, which regenerates the filter and called passive regeneration. Inorganic ash that is in the diesel exhaust will also be collected on the filter elements, and because this doesn't burn (oxidize) it necessitates the eventual cleaning of the filter elements (for standby operation, this cleaning of ash will not be necessary for many years). Exhaust sound silencing is integrated with the diesel particulate filter as one complete assembly.

2.2 SootAlert Module (Datalogger and Monitor)

A Johnson Matthey CARB Verified SootAlert is provided with each CRT(+). The SootAlert monitors, logs the operation of the DPF and predicts when the filters will need regeneration by providing a Yellow-Light indicator when regeneration is needed soon, and a Red-Light indicator when regeneration is required immediately. The SootAlert will monitor the regeneration and indicate that regeneration is complete by providing a Green Light indicator, at which time the filters have successfully been regenerated. The SootAlert includes an Ethernet port for remote monitoring of the status of the filters. Both digital and analog outputs are available for remote signaling.



2.3 Operation and Maintenance Manuals

Price includes electronic Operation and Maintenance manuals and approval drawing package.

5. WARRANTY

Johnson Matthey warrants that the CARB verified CRT Particulate Filter System will meet the particulate matter reduction percentage as outlined in Table 2 Emissions Data when installed and operated in accordance with Johnson Matthey's Operation and Maintenance Manual and when operated on a diesel engine that meets the engine manufacture's specifications. Except to the limited extent provided by Section 11 of Johnson Matthey's General Terms and Conditions, no other warranties, express or implied, are provided.

The warranty for the CARB verified Passive Particulate Filter System supplied by Johnson Matthey is 60 months from date of shipment or 4,200 hours of engine operation, whichever occurs first. This warranty is subject to limited product warranty terms.

Please refer to the appendices for more details. This warranty is subject to the attached warranty terms. For carbon steel CRT units, the high temperature black paint finish does not guarantee rust from occurring. A stainless-steel version is available, as an option, for an additional price.

Johnson Matthey must be notified in writing upon system startup or the warranty will be void.

Johnson Matthey

CRT®(+) Diesel Particulate Filter System

Johnson Matthey Sets the Standard for Stationary Diesel Engine PM Emissions Control

Benefits:

- Reduces PM, HC and CO by over 90%
- Verified by CARB for emergency backup power and prime power stationary diesel engines
- Multiple-filter design enables the **CRT(+)** to be used on all engine sizes
- Modular filter design for ease of installation, routine service and easy maintenance
- Self-regeneration and filter cleaning for convenience and ease-of-use
- Passive-regen technology requires no supplemental heat or fuel
- For optimal performance, operates with ULSD (ultra low sulfur diesel) and B20 biodiesel fuels
- Each unit is equipped with the CRTdm diagnostic module, with data logging, back pressure alarm capability with computer interface
- Housed in stainless steel for strength and durability
- PM collection/filtration begins when engine starts and continues for the entire run time





Johnson Matthey CRT®(+), Continuously Regenerating Technology

The **CRT®(+)** (Continuously Regenerating Technology) DPF is Johnson Matthey's patented technology for the control of emissions from diesel engines. It is the first PM control technology that can regenerate at an exhaust temperature of 465°F, making the **CRT(+)** the most efficient DPF available. The **CRT(+)** has been verified by the California Air Resources Board (CARB) for application to all stationary diesel engines used for generating power, including:

- Emergency Back-Up Power
- Prime Power

This advanced passive regenerating diesel particulate filter system not only reduces particulate matter (PM) by 90%, it also reduces hydrocarbon (HC) and carbon monoxide (CO) by 90% or more and meets the 2009 CARB NO_2 limit of 20%.

Engineering Innovation Makes the CRT(+) Uniquely Superior

Based on a number of unique design factors, the Johnson Matthey **CRT(+)** is engineered to ensure optimum effectiveness. While other filter systems may require a catalyst coating

Johnson Matthey
Stationary Emissions Control

Suite 200, 400 Lapp Road, Malvern, PA 19355, USA
TEL: (484) 320-2136, FAX: (484) 320-2152
E-MAIL: info@jmsec.com

Johnson Matthey

CRT®(+) Diesel Particulate Filter System

CARB verified for emergency backup power and prime power; meets NO_2 slip requirements

on the filter, Johnson Matthey employs a novel two-component design in which the catalyst is separate from the filter. This allows for maximum catalyst and filter performance. The catalyst is positioned before the filter to convert NO into NO_2. The NO_2 then oxidizes the soot that is collected on the filter to regenerate the filter. The NO_2 is more effective than oxygen in combusting the soot and at a much lower temperature than is normally required. In fact, the **CRT(+)** filter is regenerated at a temperature that is 20% lower than other filters on the market. This process of NO_2 soot combustion is the heart of the Johnson Matthey patent. The catalyst also converts CO and HC into CO_2 and water.

The significantly lower operating temperature of the Johnson Matthey **CRT(+)** is compatible with typical diesel exhaust temperatures, so no supplemental heat is required. Using a "flow-through" platinum coated catalyst, the soot travels directly through the catalyst and is collected on the filter. As a result, the catalyst is kept free of soot, ensuring that it performs at the highest level possible. Soot is trapped on the filter where it's then destroyed by the NO_2 produced by the catalyst. This coordinated operation between the catalyst and filter makes the **CRT(+)** highly efficient and effective.

What's more, the Johnson Matthey **CRT(+)** DPF utilizes passive regeneration to keep the filter clean during engine operation. By contrast, active-regen filter technologies require an external heat source such as fuel injection, burner or electricity. The potential to cause a fire is always a risk in an active-regen system. When compared to other passive-regen DPF technologies, the **CRT(+)** DPF can regenerate at engine exhaust temperatures well below all of the others, making the **CRT(+)** the most efficient DPF on the market today.

Proven Success

For 40 years, Johnson Matthey has been the global leader in the emissions control industry. When it comes to performance, Johnson Matthey's CRT technology has proven to be the superior solution for mobile and stationary diesel engines. It has been installed on more than 150,000 heavy duty diesel engines worldwide. The leader—Johnson Matthey—continues to be the best choice for all engine emissions control applications.

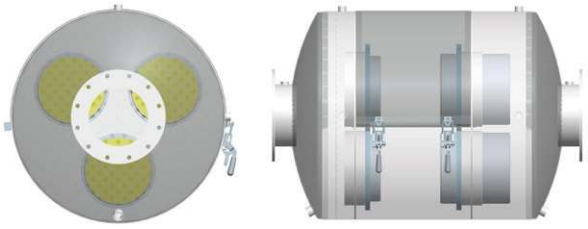

FILTER TECHNOLOGIES

Comparison of CARB verified particulate filter technologies for stationary diesel engines

	JOHNSON MATTHEY CRT®(+) FILTER SYSTEM	OTHER FILTER SYSTEMS
Filter technology	Catalyst + ceramic filter	Catalyzed ceramic filter or Burner and SiC filter
Regeneration technology and temperature	Passive: @ 240°C for 40% of duty cycle, or 5 hours @ 300°C after every 200 consecutive hours < 240°C	Passive: @ 300°C for 30% of duty cycle or 2 hours, whichever is longer Active regeneration required: 0.1 PM : < 375°C 0.2 PM : < 405°C 0.3 PM : < 420°C 0.4 PM : < 435°C
NOx / PM Ratio	15 @ > 300°C 20 @ < 300°C	
Meets CARB 2009 20% NO_2 limit	Yes	No
Full CARB Verification	• Emergency backup • Prime (conditional)	• Emergency backup
Diesel engine family applicability	≤ 0.4 g/bhp-hr PM	Passive: ≤ 0.1 g/bhp-hr PM Active: ≤ 0.4 g/bhp-hr PM
Verification level	3 (> 85% PM reduction)	3 (> 85% PM reduction)
Maximum consecutive minutes at idle	720	Passive 240 Active 720
# of cold starts idle time after each cold start	24 30 minutes	12 to 24 10 to 30 minutes
Max. hours before filter cleaning	8000 depending on hours of usage	2000 to 5000 project specific
Fuel	<15 ppm sulfur or biodiesel (20%)	Similar or less accepting

Johnson Matthey
Stationary Emissions Control

Suite 200, 400 Lapp Road, Malvern, PA 19355, USA
TEL: (484) 320-2136, FAX: (484) 320-2152
E-MAIL: info@jmsec.com

©2009 Johnson Matthey

REVISIONS					
REV.	DATE	DESCRIPTION	BY	ENG	APPROVED
0	10/12/16	INITIAL RELEASE	M.D.C.		EJB 8/11/17
1	5/25/2018	REVISED TITLE BLOCK & TOLERANCE BLOCK	M.D.C.		EJB 9/17/18

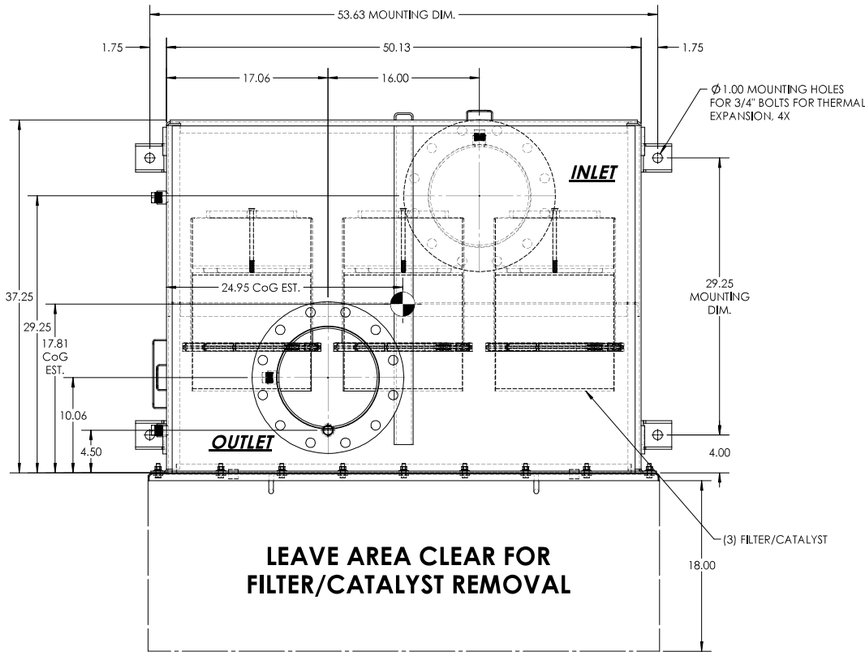

PLAN VIEW

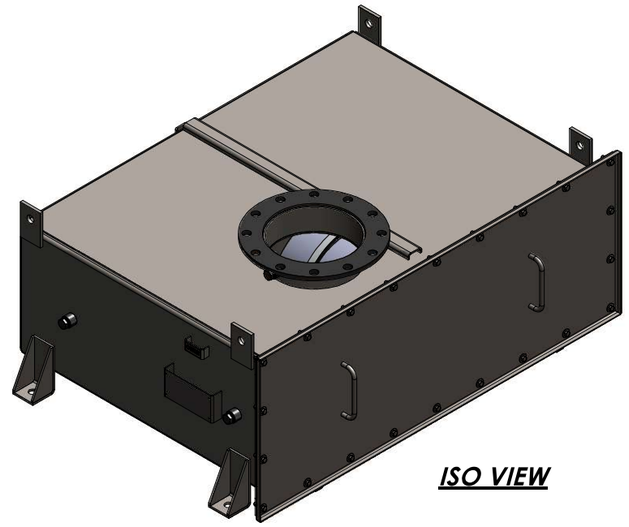

ISO VIEW

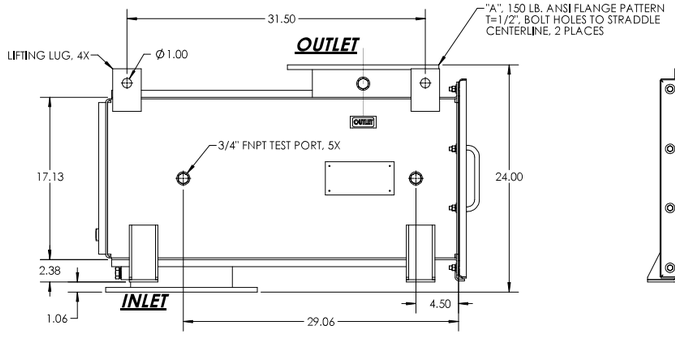

ELEVATION SIDE VIEW

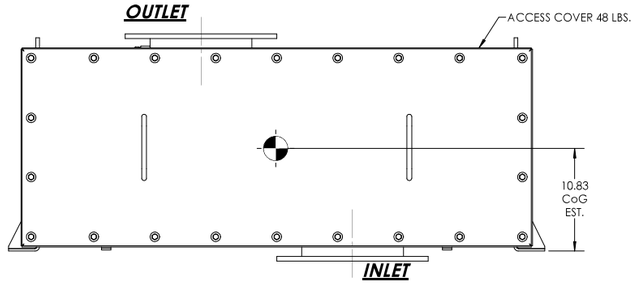

ELEVATION FRONT VIEW

FLANGE CONFIGURATION AND PART NUMBER		
FLANGE SIZE "A"	CS PART NO.	SS PART NO.
8	18971	190661
10	18972	190662

* BOLD FLANGE SIZE SHOWN

NOTES:

1. WEIGHT IS ESTIMATED AND IS BASED UPON THE SHOWN CONFIGURATION.
2. ESTIMATED SOUND ATTENUATION: CRITICAL GRADE 25-30 dBA.
3. ALL WELDING TO BE IN ACCORDANCE WITH WELDING GUIDELINES, SEE DRAWING 609826.
4. MATERIAL (MS): 7 GA. ASTM A36 CARBON STEEL or 304 STAINLESS STEEL.
5. FINISH: HIGH TEMPERATURE BLACK PAINT TO HOUSING AND FLANGES (CARBON STEEL ONLY). PER JM PAINT SPEC SEC-EN-P-026.
6. PIPE DIAMETER OF CUSTOMER'S EXHAUST LINE(S) SHALL BE NO LESS THAN THE FLOW AREA OF THE INLET CONNECTION(S) PROVIDED BY JOHNSON MATTHEY.
7. JM BACKPRESSURE GUARANTEE EXTENDS FROM THE CRT INLET CONNECTION TO THE CRT OUTLET CONNECTION ONLY. CUSTOMER IS RESPONSIBLE FOR BACKPRESSURE OR PRESSURE DROP OF ALL OTHER COMPONENTS IN THE ENGINE EXHAUST SYSTEM.

STANDARD TOLERANCES UNLESS SPECIFIED OTHERWISE [ ] ALTERNATE DIMENSION UNITS ARE FOR REFERENCE ONLY.					
MACHINING				GENERAL FABRICATION	
0.0	±0.0300"	FRACTIONS	±1/16"	< 36"	±1/16"
0.00	±0.0150	ANGLES	±0.5°	36-140"	±1/8"
0.000	±0.0050	SURFACE FINISH	125 µ"AA	> 140"	±1/4"
FILLETS SHOWN SHARP = .03"R MAX.				ANGLES	±0.5°
BREAK CORNERS .03" X 45° CHAMFER					
TAPPED HOLES - MIN. DEPTH FOR FULL THREADS = 1.8 X DIAMETER CHAMFER ALL TAPPED HOLES TO ROOT OF FIRST THREAD					
ALL DIMENSIONS ARE INCHES UNLESS SPECIFIED OTHERWISE					

SUPPORTING THE HOUSING:

THE HOUSING SHALL BE SUPPORTED WITH AT LEAST 2 BEAMS RUNNING UNDERNEATH THE FEET. THESE BEAMS SHALL BE DESIGNED FOR THE HOUSING THERMAL EXPANSION AND WEIGHT. IF A FIXED POINT ON THE HOUSING IS REQUIRED PLEASE SET STATIONARY ONE "CORNER" ONLY AND LET THE OTHER (3) "CORNERS" EXPAND (THERMAL GROWTH). AN EXPANSION JOINT IS TYPICALLY REQUIRED ON THE INLET FLANGED CONNECTION.

Shipping Dims		
Length L"	Width W "	Height H "
Material		
Finish		
Weight (lbs) 631	Model Rev.	

Johnson Matthey
Inspiring science, enhancing life

THIS DRAWING IS OUR PROPERTY AND ALL THE INFORMATION CONTAINED THEREON IS TO BE KEPT CONFIDENTIAL BY THE RECIPIENT AND NOT TO BE USED OR DISCLOSED TO ANY OTHER PERSON, FIRM OR CORPORATION WITHOUT OUR EXPRESS CONSENT; AND THIS DRAWING SHALL NOT BE USED, DIRECTLY OR INDIRECTLY, EXCEPT IN CONNECTION WITH OUR WORK. ALL RIGHTS OF DESIGN OR INVENTION ARE PRESERVED

CRT(+) 3-N-MS-BITO-A/A-LP
GENERAL ARRANGEMENT

DRAWN BY	CHECKED	DATE	WHERE USED	DISCIP.	PROJECTION: THIRD ANGLE	SHEET NO.	SIZE
MDC	EJB	10-12-16				1 OF 6	D
ENGINEER	APPROVED	SCALE	EWR NO.	SO NO.	DRAWING NO.		SHT. REV.
	BAT	1:8			609843 -1-		1

C:\JM Environmental\SEC\America\Audubon\Standards Products\sBTxx - CRT & SDPF\CRT_SDPF_GEN 2\Engineering\Fabrication Drawing\609843 (CRT 1 THRU 6 BITO LP) Wednesday, October 03, 2018 12:21:14 PM

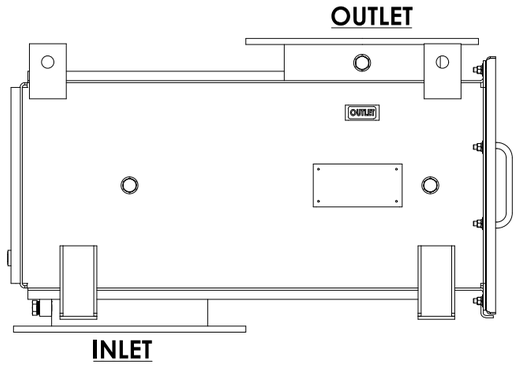

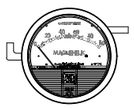



GAGE
SIDE AND BACK VIEW

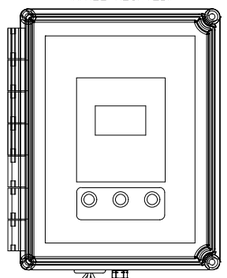

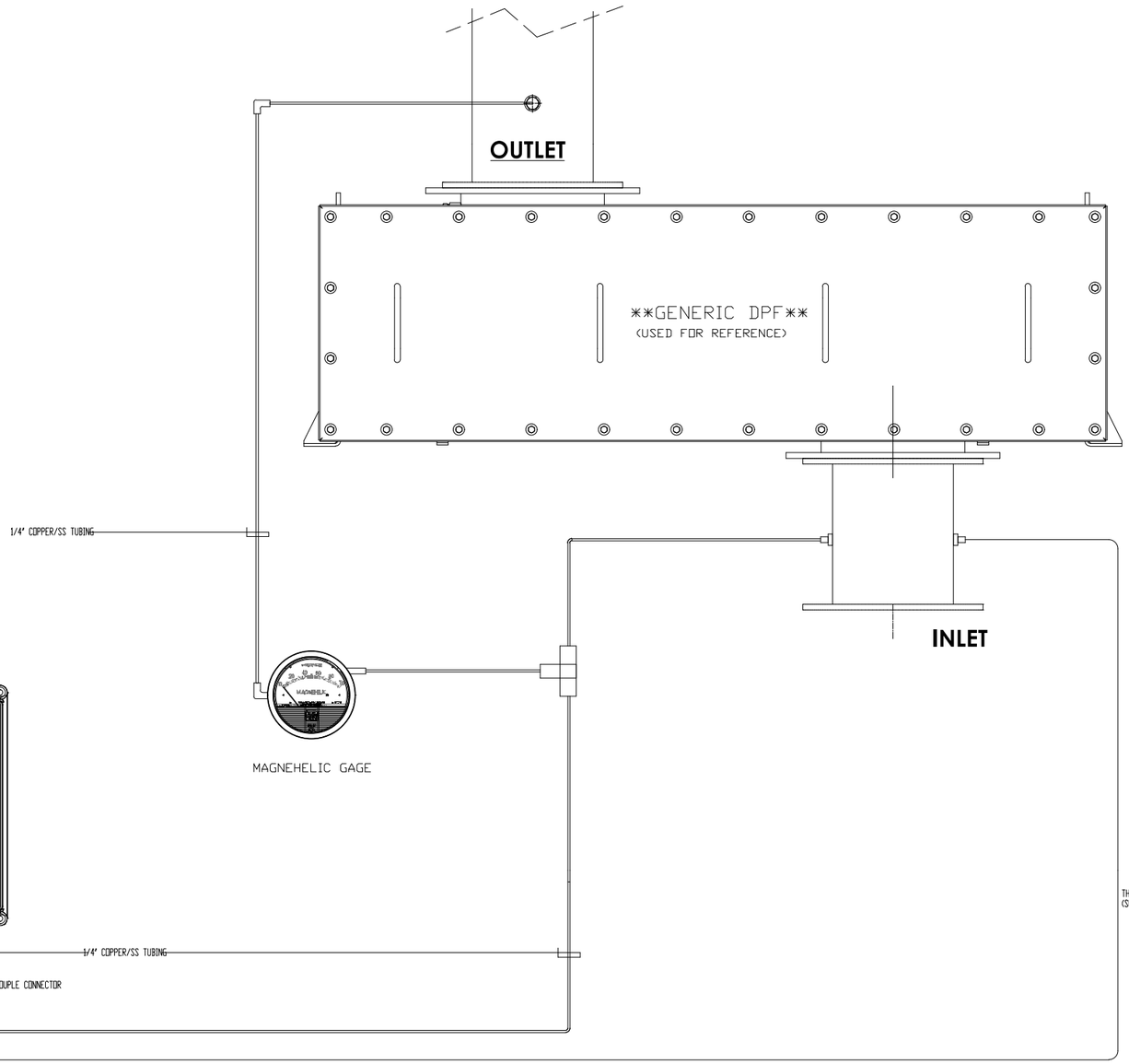

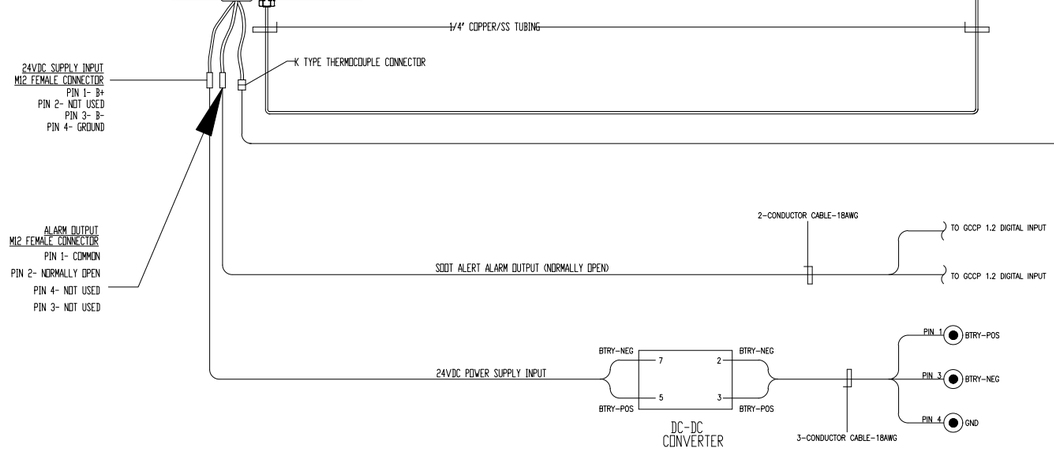

NOTES/LEGEND:

- GENSET AC TERMINAL STRIP
- EMCP DC TERMINAL STRIP

NO.	REVISION	DATE	ITEM NO.	DRAWING NO.	NO. REQ'D	MATERIAL DESCRIPTION	REMARKS
0	ISSUED FOR APPROVAL		1	6345418 & 6345464		GCCP 1.2	CATERPILLAR

DRAWN: D. URIARTE — DATE: 08/08/2025
CHECKED — DATE
APPROVED — DATE

QUINN POWER SYSTEMS | CAT

656 E LA CADENA DR.
RIVERSIDE, CA 92507

TITLE: JOHNSON MATTHEY DPF PANEL INTERFACE
SCALE: NONE
JOB: 240171 - CITY OF REDLANDS
DWG NO. E240171

City Council Meeting **J. 3.**

DATE: 03/03/2026

TO: Honorable Mayor and City Council Members

SUBJECT: Consideration of a Purchase and Sale Agreement with Sartin Properties, LLC., for the sale of Assessor Parcel Number 0168-343-01-0000 in the amount of $250,000, and determine that approval of the agreement is exempt from environmental review pursuant to Section 15061(b)(3) of the State's guidelines implementing the California Environmental Quality Act (Assistant City Manager Boatman)

MOTION(S):

If the City Council determines that staff's recommendation is appropriate, the following motions are provided:

1. I move that the City Council find that approval of the Purchase and Sale Agreement with Sartin Properties, LLC., is exempt from environmental review pursuant to Section 15061(b)(3) of the State's guidelines implementing the California Environmental Quality Act; and

2. I move that City Council approve the Purchase and Sale Agreement with Sartin Properties, LLC., for the sale of Assessor Parcel Number 0168-343-01-0000.

RECOMMENDATION:

Staff recommends that the City Council determine that approval of the Purchase and Sale Agreement with Sartin Properties, LLC., is exempt from environmental review pursuant to Section 15061(b)(3) of the State's guidelines implementing the California Environmental Quality Act.

Staff further recommends that the City Council approve the Purchase and Sale Agreement with Sartin Properties, LLC., for the sale of Assessor Parcel Number 0168-343-01-0000 in the amount of $250,000.

DISCUSSION:

The City of Redlands owns approximately 4.67 acres of real property located in the community of Mentone, generally situated north of Mentone Avenue and south of Mill Creek Road (Assessor Parcel Number 0168-343-01-0000).

Staff negotiated a Purchase and Sale Agreement between the City, as seller, and Sartin Properties, LLC, as buyer, for the sale of the property for $250,000. The agreement requires a $1,000 earnest money deposit and provides the buyer with a 30-day due diligence period during which the buyer may investigate the property and terminate the agreement at its discretion. If the buyer proceeds, the deposit becomes non-refundable and is credited toward the purchase price at closing.

The property will be conveyed in its existing “as-is” condition by grant deed. Escrow will be administered by First American Title Company, with escrow costs split evenly between the parties. The buyer will be responsible for title insurance and recording fees, and the City will be responsible for applicable documentary transfer taxes. The buyer has stated that the intended use of the property is agricultural. Approval of the agreement authorizes the transfer of ownership only and does not approve or entitle any future development of the property.

Approval of the Purchase and Sale Agreement is exempt from environmental review under the California Environmental Quality Act pursuant to CEQA Guidelines Section 15061(b)(3), the commonsense exemption, because the action involves only a transfer of ownership and will not result in any physical change to the environment. Any future development or change in use would be subject to separate discretionary approvals and environmental review, as required.

The Surplus Land Act (Government Code Sections 54220 et seq.) applies to the disposition of land by a local agency. The proposed sale is subject to, and consistent with, the applicable requirements of the Surplus Land Act.

ALTERNATIVES:

The City Council may elect not to approve the agreement and direct staff accordingly.

STRATEGIC PLAN:

Not Applicable

SUBMITTED BY:
Chris Boatman, Assistant City Manager

RECOMMENDED BY:
Charles M. Duggan Jr., City Manager

REVIEWED BY:
Yvette M. Abich Garcia, City Attorney
Janice McConnell, Assistant City Manager
Danielle Garcia, Management Services/Finance Director

PREPARED BY:
Tricia Swope, Manager, Facilities & Community Services

Fiscal Impact

Fiscal Year:	FY 2025-26
Revenue Generating:	Y
Appropriation Required Y/N:	N
Amount:	250,000
Budgeted Y/N:	N
Discussion:	

The sale of the subject property will generate one-time revenue in the amount of $250,000. Upon close of escrow, the proceeds will be deposited into the appropriate fund in accordance with City policy and applicable financial regulations. This action will have no adverse impact on the General Fund, and the revenue will be available to support authorized municipal purposes consistent with fund restrictions.

Attachments

A. Purchase and Sale Agreement
B. Map of Parcel 0168-343-01

PURCHASE AND SALE AGREEMENT

AND JOINT ESCROW INSTRUCTIONS

DATED

MARCH 3, 2026

BY AND BETWEEN

CITY OF REDLANDS,
a municipal corporation

AS SELLER,

SARTIN PROPERTIES, LLC,
a California Limited Liability Company,

AS BUYER

TABLE OF CONTENTS

Page

1. PURCHASE AND SALE. 1

2. PURCHASE PRICE. 1

2.1 Deposits 1

2.2 Deposit of Balance 2

3. ESCROW. 2

3.1 Opening of Escrow 2
3.2 Escrow Instructions 2
3.3 Termination/Cancellation 3

4. ACTIONS PENDING CLOSING. 3

4.1 Due Diligence. 3
4.2 Title. 6

5. DESCRIPTION OF PROPERTY. 6

5.1 The Real Property 6

6. CONDITIONS TO CLOSING. 7

6.1 Buyer’s Closing Conditions 7
6.2 Seller's Closing Conditions 8

7. CLOSING. 8

7.1 Closing Date 8
7.2 Deliveries by Seller 8
7.3 Deliveries by Buyer 9
7.4 Actions by Escrow Agent 9
7.5 Prorations/Apportionment 10
7.6 Closing Costs 10
7.7 Closing Statement 11
7.8 Deliveries Outside of Escrow 11

8. SELLER’S REPRESENTATIONS AND WARRANTIES. 11

8.1 Due Organization 11
8.2 Seller’s Authority; Validity of Agreements 12
8.3 No Third-Party Rights 12
8.4 Litigation 12

8.5 Zoning and Condemnation....12
8.6 No Violations of Environmental Laws....12
8.7 No Other Commitments....13
8.8 Wells....13

9. BUYER'S REPRESENTATIONS AND WARRANTIES....13

9.1 Due Organization....13
9.2 Buyer's Authority; Validity of Agreements....13

10. SURVIVAL....14

11. AS-IS....14

12. RISK OF LOSS....14

12.1 Condemnation....14
12.2 Casualty....15

13. REMEDIES....15

13.1 Default by Seller....15
13.2 Default by Buyer....16

14. BROKERS....16

15. MISCELLANEOUS PROVISIONS....17

15.1 Entire Agreement....17
15.2 Modification; Waiver....17
15.3 Notices....17
15.4 Expenses....18
15.5 Severability....18
15.6 Successors and Assigns....18
15.7 Counterparts....19
15.8 Governing Law; Jurisdiction;....19
15.9 Headings....19
15.10 Time of Essence....19
15.11 Further Assurances....19
15.12 Construction....19
15.13 Attorneys' Fees....20
15.14 Business Days....20

PURCHASE AND SALE AGREEMENT AND JOINT ESCROW INSTRUCTIONS

This purchase and sale agreement and joint escrow instructions (this "Agreement") is made and entered into as of the 3rd day of March, 2026 (the "Agreement Date"), by and between City of Redlands, a municipal corporation ("Seller"), and Sartin Properties, LLC, a California limited liability company ("Buyer"), for the purpose of setting forth the agreement of the parties and to provide instructions to Escrow Agent with respect to the transaction contemplated by this Agreement. Seller and Buyer are sometimes individually referred to herein as a "Party" and, together, as the "Parties."

RECITALS

A. Seller is the owner of an undivided fee simple interest in certain real property located in the City of Redlands ("City"), San Bernardino County ("County"), State of California, known as County of San Bernardino Assessor Parcel Number 0168-343-01-0000, and as more particularly described and set forth in Exhibit "A" attached hereto (the "Land"). The Land, together with any Improvements (as defined in Section 5), are referred to in this Agreement as the "Property."

B. Seller desires to sell, transfer, and convey the Property to Buyer, and Buyer desires to purchase and acquire the Property from Seller, upon and subject to the terms and conditions set forth in this Agreement.

AGREEMENT

NOW, THEREFORE, in consideration of the mutual covenants contained in this Agreement and for other good and valuable consideration, the receipt and sufficiency of which is hereby acknowledged, Buyer and Seller hereby agree, and instruct Escrow Agent, as follows:

1. PURCHASE AND SALE.

Subject to and upon all of the terms and conditions of this Agreement, Seller agrees to sell, transfer, and convey to Buyer, and Buyer agrees to purchase and acquire from Seller, the Property.

2. PURCHASE PRICE.

The purchase price of the Property (the "Purchase Price") shall be Two Hundred Fifty Thousand Dollars ($250,000.00). The Purchase Price shall be payable as follows:

2.1 Deposits. Within one (1) day following the "Opening of Escrow" (as hereinafter defined), Buyer shall deposit into "Escrow" (as hereinafter defined) the sum of One Thousand Dollars ($1,000.00) (which amount, together with any and all interest earned thereon, shall hereinafter be referred to as the "Deposit"). The Deposit shall be fully refundable through the Due Diligence Termination Date, as defined in Section 4.1.3. From and after the Due Diligence Termination Date, provided Buyer does not elect to terminate this Agreement pursuant to the terms of Section 4.1.3, the Deposit shall become non-refundable, except as specifically provided otherwise herein, and shall be credited against the Purchase Price at Closing.

2.1.1 Refund of Deposit. In the event that Buyer delivers its Feasibility Notice, but subsequently elects to terminate this Agreement due to (a) a Seller Default, as defined in Section 13.1 hereunder, (b) a failure of a Buyer's Condition to Closing, or (c) the occurrence of any other event which by the terms of this Agreement gives rise to Buyer's right to terminate this Agreement and receive a refund of the Deposit, then, subject to the terms of Section 13.1, (i) the Deposit shall be returned by Escrow Agent to Buyer, or to the extent previously released to Seller, and refunded to Buyer by Seller, (ii) this Agreement and the Escrow shall terminate, and (iii) the Parties shall have no further obligation to one another with respect to this Agreement, except with respect to such provisions which by their terms survive the termination of this Agreement.

2.1.2 Interest. The Deposit and any other cash held by Escrow Agent for the benefit of Buyer shall be held in a federally insured interest-bearing account, and the interest shall accrue to Buyer's benefit.

2.2 Deposit of Balance. Buyer shall, at least one (1) business day prior to Closing (as defined in Section 7.1), deposit into Escrow in the form of wire transfer, cash or a certified or bank cashier's check for immediately available funds, the amount of the Purchase Price less the Deposit, plus Buyer's closing costs and Buyer's share of any prorations to be made in accordance with this Agreement.

3. ESCROW.

3.1 Opening of Escrow. Buyer and Seller shall cause an escrow ("Escrow") to be opened with First American Title Company located at 3281 E. Guasti Rd., Suite 400, Ontario, CA 91761, Attention: Kelly Simoneau, Ksimoneau@firstam.com ("Escrow Agent") by delivery to Escrow Agent of a fully executed copy of this Agreement. Escrow Agent shall promptly deliver to Buyer and Seller written notice of the date of the "Opening of Escrow." As used herein, the term "Opening of Escrow" means the day on which Escrow Agent receives a fully executed copy of this Agreement and has notified each Party in writing of such receipt.

3.2 Escrow Instructions. This Agreement shall constitute escrow instructions to Escrow Agent as well as the agreement of the Parties. In the event that any other printed escrow instructions are requested of the Parties and the terms thereof conflict or are inconsistent with any provision of this Agreement or any deed, instrument, or document executed or delivered in connection with the transaction contemplated hereby, the provisions of this Agreement, or such deed, instrument, or document shall control. Escrow Agent is hereby appointed and designated to act as Escrow Agent and instructed to deliver, pursuant to the terms of this Agreement, the documents and funds to be deposited into Escrow as herein provided.

3.3 Termination/Cancellation. Upon any termination or cancellation (the terms being used interchangeably herein) by either of the Parties as expressly allowed under this Agreement (including, without limitation, any deemed termination or cancellation), (a) the Deposit shall be delivered to the Party that this Agreement specifies is entitled thereto; (b) all documents, instruments, and funds delivered into Escrow shall be returned to the Party that delivered the same into Escrow, and (c) the Parties shall thereafter be relieved from further liability hereunder, except with respect to any obligations under this Agreement that are expressly stated to survive any

termination of this Agreement. A copy of any notice of termination allowed under this Agreement shall be sent to Escrow Agent by the Party electing to terminate. Upon a termination or cancellation by either of the Parties for any reason other than a default by Seller, Buyer shall deliver to Seller copies of all third-party reports, plans, studies, applications or any other matters obtained by or prepared for Buyer in connection with Buyer's review of the Property and which relate to the physical condition of the Property, including, without limitation, any engineering and environmental reports completed and/or obtained by Buyer in connection with Buyer's review of the Property ("Property Condition Documents"), but excluding any documents that are subject to the attorney client privilege or that contain proprietary or confidential information. Seller understands and acknowledges that neither Buyer nor any of Buyer's representatives make any representation or warranty to Seller as to the accuracy or completeness of the Property Condition Documents and that Buyer and Buyer's representatives have not made or will not make any attempt to verify the data contained therein. Seller agrees that Buyer and Buyer's representatives shall not have any liability to Seller as a result of Seller's use of the Property Condition Documents.

4. ACTIONS PENDING CLOSING.

4.1 Due Diligence.

4.1.1 Property Materials.

4.1.1.1 Within five (5) days following the Opening of Escrow, Seller shall, at Seller's sole cost and expense, to the extent within the Seller's possession or control, provide to Buyer true, correct, and complete copies of all of the following documents (collectively, the "Property Materials"):

(a) Any and all surveys for the Property;

(b) All existing, proposed or draft site plans, maps, plats, landscaping plans, construction plans and drawings, and development plans for the Property (including, without limitation, with respect to offsite development related to the Property);

(c) All existing environmental reports for the Property;

(d) All leases, occupancy agreements, operating agreements, and licenses that affect the Property;

(e) All zoning stipulations, agreements, and requirements that affect or that are proposed to affect the Property;

(f) All archaeological, biological, soil, geological, grading, drainage, and hydrology reports, surveys, or assessments and any other engineering reports for the Property; and

(g) A Natural Hazards Disclosure Report in conformity with the California Natural Hazards Disclosure Act;

4.1.1.2 Further, prior to the Due Diligence Termination Date (as defined in Section 4.1.3), upon not less than twenty-four (24) hours prior written notice by Buyer to Seller, Seller shall make available to Buyer at Seller's offices, and Buyer shall have the right to review all other records in Seller's possession or control relating to the Property.

4.1.1.3 Seller shall promptly furnish to Buyer for its review (a) any of the items described in Section 4.1.1.1 that may come into Seller's possession or control from and after the date of this Agreement, and (b) any additional documents and information in the possession or control of Seller reasonably requested in writing by Buyer. Buyer understands and acknowledges that neither Seller nor any of Seller's representatives make any representation or warranty to Buyer as to the accuracy or completeness of the Property Materials and that Seller and Seller's representatives shall have not made or will not make any attempt to verify the data contained therein. Buyer agrees that Seller and Seller's representatives shall not have any liability to Buyer as a result of Buyer's use of the Property Materials.

4.1.2 Buyer's Diligence Tests.

4.1.2.1 For thirty (30) days from the date of this Agreement, Buyer and its employees, agents, consultants, and contractors shall be entitled, at Buyer's sole cost and expense, to: (a) enter onto the Property to perform any inspections, investigations, studies, and tests of the Property (including, without limitation, physical, engineering, soils, geotechnical, and environmental tests) that Buyer deems reasonable; (b) review all Property Materials; and (c) investigate such other matters pertaining to the Property as Buyer may desire. Notwithstanding the foregoing, Buyer shall not conduct any invasive testing on the Property without the prior written consent of Seller, which consent shall not be unreasonably withheld, delayed or conditioned. Any entry by Buyer onto the Property shall be subject to, and conducted in accordance with, all applicable laws.

4.1.2.2 Buyer shall keep the Property free and clean of any mechanics' liens and indemnify, protect, defend, and hold Seller and Seller's partners, officers, directors, shareholders, managers, members, agents, employees, and representatives (each an "Indemnified Party" and collectively, the "Indemnified Parties") harmless from and against any and all claims (including, without limitation, claims for mechanic's liens or materialman's liens), causes of action, demands, obligations, losses, damages, liabilities, judgments, costs, and expenses (including, without limitation, reasonable attorneys' fees, charges, and disbursements) (collectively, "Claims") in connection with or arising out of any inspections of the Property carried on by or on behalf of Buyer pursuant to the terms hereof, provided, however, that Buyer shall have no responsibility or liability for (a) the negligence or willful misconduct of any Indemnified Party; (b) any adverse condition or defect on or affecting the Property not caused by Buyer or its employees, agents, consultants, or contractors but discovered or impacted during their inspections including, without limitation, the pre-existing presence or discovery of any matter (such as, but not limited to, any Hazardous Substance (as hereinafter defined)); and/or (c) the results or findings of any inspection.

4.1.2.3 Upon completion of Buyer's inspections, Buyer shall promptly repair any material damage to the Property caused by its entry thereon and restore the Property to substantially the same conditions as it existed prior to Buyer's entry under this Section 4.1.2.

4.1.2.4 The provisions of this Section 4.1.2 shall survive the Closing or the earlier termination of this Agreement.

4.1.3 Buyer's Termination Right. Buyer shall have the right at any time on or before the date thirty (30) days following the Opening of Escrow (the "Due Diligence Termination Date") to terminate this Agreement by delivering a written notice of such termination to Seller and Escrow Agent if Buyer determines, in its sole and absolute discretion, that the Property is not acceptable to Buyer for any reason. Buyer shall indicate its satisfaction and/or waiver of the Due Diligence condition described in this Section 4.1 by delivering written notice of such satisfaction and/or waiver ("Feasibility Notice") to Seller and Escrow Agent on or prior to the Due Diligence Termination Date. In the event Buyer fails to timely deliver a Feasibility Notice, then this Agreement and the Escrow shall be automatically deemed terminated. In the event this Agreement is terminated in accordance with this Section, then the Deposit shall be immediately returned to Buyer and the Parties shall thereafter be relieved from further liability hereunder, except with respect to any obligations under this Agreement that are expressly stated to survive any termination of this Agreement.

4.2 Title.

4.2.1 Deliveries by Seller. Within three (3) Business Days after the Opening Escrow, Seller shall cause First American Title Company ("Title Insurer") to issue and deliver to Buyer (a) a current commitment for an ALTA standard coverage Owner's Policy of Title Insurance for the Property (the "Title Report") and (b) legible copies of all documents referenced therein (collectively with the Title Report, the "Title Documents").

4.2.2 Buyer's Review of Title. Buyer shall have until the date thirty (30) days following the Opening of Escrow ("Title Review Date") to notify Seller in writing of any objection that Buyer may have to any matters reported or shown in any survey or the Title Documents or any amendments or updates thereof (a "Buyer's Objection Letter") (provided, however, that if any such amendments or updates are received by Buyer after or within five (5) Business Days before the Title Review Date, Buyer shall have five (5) Business Days following Buyer's receipt of such amendment or update and copies of all documents referenced therein to notify Seller of objections to matters shown on any such amendment or update that were not disclosed on the previously delivered survey or Title Documents and the Closing Date shall automatically be extended as necessary to facilitate such notice period and any subsequent periods for Seller's response and Buyer's election as provided in subsections (i) and (ii), below). Matters shown as exceptions to coverage in the Title Report (or any amendments or updates thereof) that are not timely objected to by Buyer as provided above shall be deemed to be "Permitted Exceptions." Seller shall cooperate, at no cost to Seller, with Buyer to eliminate matters objected to by Buyer, but, except as set forth in the last sentence of this Section 4.2.2, Seller shall have no obligation to cure or correct any matter objected to by Buyer. On or before the fifth (5th) Business Day following Seller's receipt of Buyer's Objection Letter, Seller may elect, by delivering written notice of such election to Buyer and Escrow Agent ("Seller's Response"), to cause Title Insurer to remove or

insure over any matters objected to in Buyer's Objection Letter. If Seller fails to deliver Seller's Response within the period set forth above, it shall be deemed an election by Seller not to cause Title Insurer to so remove or insure over such objections. If Seller elects or is deemed to have elected not to cause Title Insurer to so remove or insure, or if Buyer determines, in its sole discretion, that any proposed endorsement for or insurance over an objected matter is unsatisfactory, then Buyer must elect, by delivering written notice of such election to Seller and Escrow Agent on or before the earlier to occur of (a) the fifth (5th) Business Day following Buyer's receipt of Seller's Response or (b) if no Seller's Response is received by Buyer, the fifth (5th) Business Day following the date on which Seller shall have been deemed to have responded, as provided above, to: (i) terminate this Agreement, in which case the Deposit, to the extent previously deposited in Escrow, shall be immediately returned to Buyer; or (ii) proceed with this transaction, in which event those objected to exceptions or matters that Seller has not elected to cause Title Insurer to so remove or insure shall be deemed to be Permitted Exceptions. In the event that Buyer fails to make such election on a timely basis, then Buyer shall be deemed to have elected to terminate this Agreement in accordance with the preceding clause (i). Notwithstanding anything else stated herein, in all events, regardless of whether Buyer has given notice of objection as stated above Seller shall be obligated to satisfy and otherwise remove all monetary and financial liens and encumbrances in existence as of the Agreement Date or incurred by Seller on or before Closing hereunder (other than current taxes not yet due) and any additional encumbrances incurred by Seller after the Agreement Date in violation of any provision of this Agreement, and, except as may be otherwise specifically set forth in this Agreement, terminate all leases, possessory agreements, licenses, and operating agreements that affect the Property and Buyer need not object to any such matters. In furtherance thereof, Seller agrees not to cause or create any additional encumbrances or other matters affecting title to the Property to be incurred following the Agreement Date that are not satisfied or otherwise removed on or before Close as contemplated above.

4.2.3 Condition of Title at Closing. Upon the Closing, Seller shall sell, transfer, and convey to Buyer fee simple title to the Property by a duly executed and acknowledged grant deed in the form of Exhibit "B" attached hereto (the "Grant Deed"), subject only to the Permitted Exceptions and the reservations and other matters, if any, referenced or described in said Grant Deed.

5. DESCRIPTION OF PROPERTY.

5.1 The Property. As used in this Agreement, the term "Property" shall mean, collectively, all of Seller's right, title, and interest in and to: (a) the Land; (b) all improvements thereon (the "Improvements"); and (c) all of the rights, privileges, appurtenances, hereditaments, easements, reversions, and remainders pertaining to or used in connection with the Land and/or any of the Improvements, including, without limitation, all (i) development rights and credits, air rights, water, water rights, and water stock relating to the Land, (ii) strips and gores, streets, alleys, easements, rights-of-way, public ways, or other rights appurtenant, adjacent, or connected to the Land, and (iii) minerals, oil, gas, and other hydrocarbon substances in, under, or that may be produced from the Land.

6. CONDITIONS TO CLOSING.

6.1 Buyer's Closing Conditions. The obligation of Buyer to complete the transaction contemplated by this Agreement is subject to the following conditions precedent (and conditions concurrent, with respect to deliveries to be made by Seller at the Closing) (the "Buyer's Closing Conditions"), which conditions may be waived, or the time for satisfaction thereof extended, by Buyer only in a writing executed by Buyer:

6.1.1 Title. Title Insurer shall be irrevocably and unconditionally prepared and committed to issue to Buyer (with an effective date not earlier than the Closing Date), a ALTA standard coverage owner's policy of title insurance ("ALTA Standard Policy") in favor of Buyer for the Property (a) showing fee title to the Property vested in Buyer, (b) with liability coverage in an amount equal to the Purchase Price, (c) with those endorsements reasonably requested by Buyer including, without limitation, a Mechanic's Lien Endorsement, and (d) containing no exceptions other than the Permitted Exceptions and the reservations and other matters referenced or described in the Grant Deed (the "Owner's Title Policy"). Buyer may, at its expense, obtain from the Title Company an ALTA extended coverage owner's policy provided the issuance of such ALTA form title policy shall not be a condition to Close of Escrow and shall cause no delay to the Close of Escrow. In the event Buyer elects to obtain an ALTA extended coverage policy, Buyer shall obtain an ALTA Survey, at its sole cost and expense, in a timely manner so as to facilitate the issuance of the ALTA extended coverage policy upon the Close of Escrow.

6.1.2 Seller's Due Performance. All of the representations and warranties of Seller set forth in Section 8 shall be true, correct, and complete in all material respects as of the Closing Date, and Seller, on or prior to the Closing Date, shall have complied with and/or performed all of the obligations, covenants, and agreements required on the part of Seller to be complied with or performed pursuant to the terms of this Agreement on or prior to the Closing.

6.1.3 Physical Condition of Property. The physical condition of the Property shall be substantially the same on the Closing Date as on the Agreement Date, except for reasonable wear and tear and any damage due to any act of Buyer or Buyer's representatives.

6.1.4 Bankruptcy. No action or proceeding shall have been commenced by or against Seller under the federal bankruptcy code or any state law for the relief of debtors or for the enforcement of the rights of creditors, and no attachment, execution, lien, or levy shall have attached to or been issued with respect to Seller's interest in the Property or any portion thereof.

6.1.5 Possession/Removal of Personal Property. Upon the Close of Escrow, Seller shall deliver exclusive possession of the Property to Buyer. Prior to the Close of Escrow Seller shall have the right to remove any or all improvements and Seller's equipment, trade fixtures or other personal property. Any such salvage and removal shall be performed pursuant to all required permits, in accordance with all laws, rules and regulations, and in such manner that the Property is delivered upon the Close of Escrow without any safety issues on site, such as large holes, partially razed structures, or any other similarly unsafe conditions. Any improvements or personal property of Seller remaining on the Property after the Close of Escrow shall be conclusively deemed abandoned by Seller (the "Abandoned Personal Property"). Seller waives and relinquishes all rights, title, interest and claims in any such Abandoned Personal Property and

effective upon abandonment transfers, conveys and assigns all of its right, title and interest in such Abandoned Personal Property to Buyer for disposition as determined by Buyer in Buyer's sole and absolute discretion.

6.1.6 Proposed Development of the Property. Buyer shall have prepared and submitted to Seller a written design and plans for a mixed-use (commercial retail and residential, and public parking) project ("Project") on the Property to the reasonable satisfaction and approval of Seller. Buyer shall also secure funding for the acquisition of the Property and the development of the Project on the Property from a credible lending institution or private funding entity, and shall have submitted written evidence and documentation of the same to Seller, for Seller's reasonable approval thereof.

6.2 Seller's Closing Conditions. All of the representations and warranties of Buyer set forth in Section 9 shall be true, correct, and complete in all material respects as of the Closing Date, and Buyer, on or prior to the Closing Date, shall have complied with and/or performed all of the obligations, covenants, and agreements required on the part of Buyer to be complied with or performed pursuant to the terms of this Agreement on or prior to the Closing.

7. CLOSING.

7.1 Closing Date. Subject to the provisions of this Agreement, the Closing shall take place on or before that date ("Closing Date") which is the thirtieth (30th) day after the expiration date of the due diligence period**.** As used herein, the "Closing" shall mean the recordation of the Grant Deed in the Official Records.

7.2 Deliveries by Seller. On or before the Closing Date, Seller, at its sole cost and expense, shall deliver or cause to be delivered into Escrow the following items, documents, and instruments, each dated as of the Closing Date, fully executed and, if appropriate acknowledged, and, if applicable, in proper form for recording:

7.2.1 Grant Deed. The Grant Deed conveying the Property to Buyer;

7.2.2 Non-Foreign Affidavit. A Non-Foreign Affidavit in the form attached hereto as Exhibit "C" (the "Non-Foreign Affidavit");

7.2.3 State Affidavit. A California Franchise Tax Board Form 593-C (the "State Affidavit");

7.2.4 Owner's Affidavit. An owner's affidavit or seller's certificate duly executed by Seller in the form customarily required by title insurance companies in the county in which the Property is located, in connection with the issuance of title insurance, to remove standard exceptions for mechanics liens, the gap period from the latest title update of Buyer's title insurance commitment and Parties in possession;

7.2.5 Proof of Authority. Such proof of Seller's authority and authorization to enter into this Agreement and the transaction contemplated hereby, and such proof of the power and authority of the individual(s) executing or delivering any instruments, documents, or

certificates on behalf of Seller to act for and bind Seller as may be reasonably required by Title Insurer or Escrow Agent; and

7.2.6 Other. Such other items, documents, and instruments as may be reasonably required by Buyer, Title Insurer, Escrow Agent, or otherwise in order to effectuate the provisions of this Agreement and the Closing and/or otherwise to fulfill the covenants and obligations to be performed by Seller at the Closing pursuant to this Agreement.

7.3 Deliveries by Buyer. On or before the Closing Date, Buyer, at its sole cost and expense, shall deliver or cause to be delivered into Escrow the following funds and the following items, documents, and instruments, each dated as of the Closing Date, fully executed and, if appropriately acknowledged, and, if applicable, in proper form for recording:

7.3.1 Purchase Price. Cash or other immediately available funds in an amount equal to the unpaid sum of the Purchase Price (less the Deposit) and all of Buyer's share of the Closing Costs (as hereinafter defined) (and otherwise sufficient to close the transaction contemplated herein);

7.3.2 Proof of Authority. Such proof of Buyer's authority and authorization to enter into this Agreement and the transaction contemplated hereby, and such proof of the power and authority of the individual(s) executing or delivering any instruments, documents, or certificates on behalf of Buyer to act for and bind Buyer as may be reasonably required by Title Insurer or Escrow Agent; and

7.3.3 Other. Such other items, documents, and instruments as may be reasonably required by Seller, Title Insurer, Escrow Agent, or otherwise in order to effectuate the provisions of this Agreement and the Closing and/or otherwise to fulfill the covenants and obligations to be performed by Buyer at the Closing pursuant to this Agreement.

7.4 Actions by Escrow Agent. Provided that Escrow Agent shall not have received written notice from Buyer or Seller of the failure of any condition to the Closing or of the termination of the Escrow and this Agreement, when Buyer and Seller have deposited into Escrow the documents and funds required by this Agreement and Title Insurer is irrevocably and unconditionally prepared and committed to issue the Owner's Title Policy in accordance with the terms hereof, Escrow Agent shall, in the order and manner herein below indicated, take the following actions:

7.4.1 Recording. Cause the Grant Deed and any other documents customarily recorded and/or that the Parties hereto may mutually direct to be recorded in the Official Records and obtain conformed copies thereof for distribution to Buyer and Seller.

7.4.2 Funds. Disburse all funds as follows:

7.4.2.1 Pursuant to the Closing Statement (as hereinafter defined), retain for Escrow Agent's own account all escrow fees and costs, disburse to Title Insurer the fees and expenses incurred in connection with the issuance of the Owner's Title Policy, and disburse to any other persons or entities entitled thereto the amount of any other Closing Costs;

7.4.2.2 Disburse to Seller an amount equal to the Purchase Price, less or plus the net debit or credit to Seller by reason of the prorations and allocations of Closing Costs provided for in this Agreement; and

7.4.2.3 Disburse to the Party who deposited the same any remaining funds in the possession of Escrow Agent after the payments pursuant to Sections 7.4.2.1 and 7.4.2.2 above have been completed.

7.4.3 Delivery of Documents. Deliver: (a) to Seller (i) one original of all documents deposited into Escrow (other than the Grant Deed, the other documents recorded pursuant to the terms of this Agreement, the Non-Foreign Affidavit, the State Affidavit and the General Assignment), (ii) one copy of the Non-Foreign Affidavit, the State Affidavit and the General Assignment, and (iii) one conformed copy of each document recorded pursuant to the terms of this Agreement; and (b) to Buyer, (i) one original of all documents deposited into Escrow (other than the Grant Deed and the other documents recorded pursuant to the terms of this Agreement, but including, without limitation, the Non-Foreign Affidavit and the State Affidavit), and (ii) the one conformed copy of each document recorded pursuant to the terms of this Agreement. Originals of any documents recorded at Closing shall be delivered after such recording as indicated thereon.

7.4.4 Owner's Title Policy. Cause Title Insurer to issue or be irrevocably and unconditionally prepared and committed to issue the Owner's Title Policy to Buyer.

7.5 Prorations/Apportionment.

7.5.1 Method of Proration. Taxes and assessments affecting the Property shall be prorated between Buyer and Seller as of the Closing Date based on a 365-day year. All non-delinquent real estate taxes and assessments on the Property shall be prorated based on the actual current tax bill, but if such tax bill has not yet been received by Seller by the Closing Date or if supplemental taxes are assessed after the Closing for the period prior to the Closing, the Parties shall make any necessary adjustment after the Closing by cash payment to the Party entitled thereto so that Seller shall have borne all real property taxes, including all supplemental taxes, allocable to the period prior to the Closing and Buyer shall bear all real property taxes, including all supplemental taxes, allocable to the period from and after the Closing. If any real property taxes or assessments or any expenses attributable to the Property and allocable to the period prior to the Closing are discovered or billed after the Closing, the Parties shall make any necessary adjustment after the Closing by cash payment to the Party entitled thereto within five (5) Business Days following the discovery thereof or the receipt by any Party of the bill therefor, as the case may be, so that Seller shall have borne all real property taxes, assessments and expenses allocable to the period prior to the Closing and Buyer shall bear all real property taxes, assessments and expenses allocable to the period from and after the Closing.

7.5.2 Survival. The obligations under this Section 7.5 shall survive the Closing and the delivery and recordation of the Grant Deed for the Property.

7.6 Closing Costs. Each Party shall pay its own costs and expenses arising in connection with the Closing (including, without limitation, its own attorneys' and advisors' fees,

charges, and disbursements), except the following costs (the "Closing Costs"), which shall be allocated between the Parties as follows:

7.6.1 Escrow Agent's escrow fees and costs shall be paid one-half by Seller and one-half by Buyer;

7.6.2 The cost of the Owner's Title Policy attributable to the standard coverage portion shall be paid by Buyer;

7.6.3 The cost of the Owner's Title Policy attributable to the extended coverage portion shall be paid by Buyer;

7.6.4 The cost of any items required to be provided by Seller pursuant to Section 4.2.2, shall be paid by Seller, and the costs of any other endorsements to the Owner's Title Policy shall be paid by Buyer;

7.6.5 Seller shall pay the cost of any documentary transfer taxes in connection with the recording of the Grant Deed;

7.6.6 Buyer shall pay all recording costs for recording the Grant Deed; and

7.6.7 All other closing fees and costs shall be charged to and paid by Seller and Buyer in accordance with customary practices in the County.

7.7 Closing Statement. Three (3) Business Days prior to the Closing Date, Escrow Agent shall deliver to each of the Parties for their review and approval a preliminary closing statement (the "Preliminary Closing Statement") setting forth: (a) the proration amounts allocable to each of the Parties pursuant to Section 7.5; and (b) the Closing Costs allocable to each of the Parties pursuant to Section 7.6. Based on each of the Party's comments, if any, regarding the Preliminary Closing Statement, Escrow Agent shall revise the Preliminary Closing Statement and deliver a final, signed version of a closing statement to each of the Parties at the Closing (the "Closing Statement").

7.8 Deliveries Outside of Escrow. Upon the Closing, Seller shall deliver sole and exclusive possession of the Property to Buyer, subject only to the Permitted Exceptions. Further, Seller hereby covenants and agrees to deliver to Buyer, on or prior to the Closing, including, without limitation, the original Property Materials to the extent within Seller's possession or control. Effective immediately upon the Closing, any personal property remaining on the Land shall be deemed abandoned and may be removed and disposed of by Buyer at its sole cost and expense. This Section 7.8 shall survive the Closing.

8. SELLER'S COVENANTS, REPRESENTATIONS AND WARRANTIES.

Seller represents, and warrants to and agrees with Buyer, as of the Agreement Date and as of the Closing Date, as follows:

8.1 Due Organization. Seller is a municipal corporation duly formed under the laws of the State of California.

8.2 Seller's Authority; Validity of Agreements. Seller has full right, power, and authority to sell the Property to Buyer as provided in this Agreement and to carry out its obligations hereunder. The individual(s) executing this Agreement and the instruments referenced herein on behalf of Seller has/have the legal power, right, and actual authority to bind Seller to the terms hereof and thereof. This Agreement is, and all other instruments, documents and agreements to be executed, and delivered by Seller in connection with this Agreement shall be, duly authorized, executed, and delivered by Seller and the valid, binding, and enforceable obligations of Seller (except as enforcement may be limited by bankruptcy, insolvency, or similar laws) and do not, and as of the Closing Date will not result in any violation of, or conflict with, or constitute a default under, any provisions of any agreement of Seller or any mortgage, deed of trust, indenture, lease, security agreement, or other instrument, covenant, obligation, or agreement to which Seller or the Property is subject, or any judgment, law, statute, ordinance, writ, decree, order, injunction, rule, ordinance, or governmental regulation or requirement affecting Seller or the Property.

8.3 No Third-Party Rights. Except as disclosed in the Title Report, Seller is not aware of any leases or occupancy agreements that grant third Parties any possessory or usage rights to all or any part of the Property.

8.4 Litigation. Seller is not aware of (a) any actions, investigations, suits, or proceedings pending or threatened that affect the Property, the ownership or operation thereof, or the ability of Seller to perform its obligations under this Agreement, and (b) there are no judgments, orders, awards, or decrees currently in effect against Seller with respect to the ownership or operation of the Property that have not been fully discharged prior to the Agreement Date.

8.5 No Violations of Environmental Laws. To Seller's knowledge and except as disclosed in the Property Materials: (a) the Property is not in, nor has it been or is it currently under investigation for violation of any federal, state, or local law, ordinance, or regulation relating to industrial hygiene, worker health and safety, or to the environmental conditions in, at, on, under, or about the Property, including, but not limited to, soil and groundwater conditions ("Environmental Laws"); (b) the Property has not been subject to a deposit of any Hazardous Substance; (c) neither Seller nor any third Party has used, generated, manufactured, stored, or disposed in, at, on, or under the Property any Hazardous Substance; and (d) there is not now in, on, or under the Property any underground or above ground storage tanks or surface impoundments, any asbestos containing materials, or any polychlorinated biphenyls used in hydraulic oils, electrical transformers, or other equipment. Seller hereby assigns to Buyer as of the Closing all claims, counterclaims, defenses, and actions, whether at common law or pursuant to any other applicable federal, state or other laws that Seller may have against any third Party or Parties relating to the existence or presence of any Hazardous Substance in, at, on, under, or about the Property. For purpose of this Agreement, the term "Hazardous Substance" shall be deemed to include any wastes, materials, substances, pollutants, and other matters regulated by Environmental Laws.

8.6 No Other Commitments. Except as may be disclosed in the Title Report, Seller has not made any commitment or representation to any governmental authority, or any adjoining or surrounding property owner, that would in any way be binding on Buyer or would interfere with Buyer's ability to develop and improve the Property, and Seller shall not make any such

commitment or representation that would affect the Property or any portion thereof, without Buyer's written consent.

8.7 Actual Knowledge. For purposes hereof, "Seller is not aware" or "to Seller's knowledge," or like terms shall mean the current actual knowledge of James Troyer, without implying any duty of investigation or inquiry. In furtherance thereof, Seller hereby warrants and represents that James Troyer is the Seller's representative most knowledgeable regarding the Property.

8.8 Survival. All of the representations, warranties, and agreements of Seller set forth in this Agreement shall be true upon the Agreement Date, shall be deemed to be repeated at and as of the Closing Date, and shall survive the delivery of the Grant Deed and the Closing for a period of one (1) year. Prior to a termination of this Agreement, Seller shall not take any action, fail to take any required action, or willfully allow or consent to any action that would cause any of Seller's representations or warranties to become untrue. If any representation or warranty of Seller was true as of the date of this Agreement, but is not true as of the Closing Date, then Seller shall disclose this changed fact to Buyer in writing. So long as Seller makes the foregoing disclosure and the change of circumstances regarding the representation or warranty did not arise due to the fault of Seller, then Seller shall not be in breach of this Agreement due to the fact that the representation or warranty has become untrue as of the Closing Date; provided, however, the fact that any representation or warranty under this Section 8 is untrue as of the Closing Date shall still be a failure of a condition pursuant to Section 6.1.2. Notwithstanding the foregoing, if Buyer has actual knowledge of the incorrectness of any representation or warranty set forth in this Section 8 as of the Close of Escrow and Buyer has not elected to terminate this Agreement as provided herein, then Buyer will be deemed to have waived any claim against Seller for the incorrectness of such representation or warranty.

9. BUYER'S REPRESENTATIONS AND WARRANTIES.

Buyer represents and warrants to Seller, as of the Agreement Date and as of the Closing Date, as follows:

9.1 Due Organization. Buyer is a limited liability company duly organized, validly existing, and in good standing under the laws of the State of California and is authorized to do business in the State of California.

9.2 Buyer's Authority; Validity of Agreements. Buyer has full right, power, and authority to purchase and acquire the Property from Seller as provided in this Agreement and to carry out its obligations hereunder. The individual(s) executing this Agreement and the instruments referenced herein on behalf of Buyer has/have the legal power, right, and actual authority to bind Buyer to the terms hereof and thereof. This Agreement is, and all other instruments, documents, and agreements to be executed and delivered by Buyer in connection with this Agreement shall be, duly authorized, executed, and delivered by Buyer and the valid, binding, and enforceable obligations of Buyer (except as enforcement may be limited by bankruptcy, insolvency, or similar laws) and do not, and as of the Closing Date will not, violate any provision of any law, statute, ordinance, rule, regulation, agreement or judicial order to which Buyer is a Party or to which Buyer is subject.

10. SURVIVAL. ALL OF THE REPRESENTATIONS, WARRANTIES, AND AGREEMENTS OF BUYER SET FORTH IN THIS AGREEMENT SHALL BE TRUE UPON THE AGREEMENT DATE, SHALL BE DEEMED TO BE REPEATED AT AND AS OF THE CLOSING DATE AND SHALL SURVIVE THE DELIVERY OF THE GRANT DEED AND THE CLOSING FOR A PERIOD OF ONE (1) YEAR. PRIOR TO A TERMINATION OF THIS AGREEMENT, BUYER SHALL NOT TAKE ANY ACTION, FAIL TO TAKE ANY REQUIRED ACTION, OR WILLFULLY ALLOW OR CONSENT TO ANY ACTION THAT WOULD CAUSE ANY OF BUYER'S REPRESENTATIONS OR WARRANTIES TO BECOME UNTRUE.

11. AS-IS. THE PARTIES HEREBY ACKNOWLEDGE AND AGREE AS FOLLOWS: (A) BUYER IS A SOPHISTICATED BUYER WHO IS FAMILIAR WITH THIS TYPE OF PROPERTY; (B) EXCEPT AS MAY BE SPECIFICALLY SET FORTH IN THIS AGREEMENT, THE DEED, AND/OR ANY OTHER DOCUMENT OR INSTRUMENT DELIVERED BY SELLER AT CLOSING (THE "EXPRESS REPRESENTATIONS"), NEITHER SELLER NOR ANY OF ITS AGENTS, REPRESENTATIVES, BROKERS, OFFICERS, DIRECTORS, SHAREHOLDERS, MEMBERS, OR EMPLOYEES HAS MADE OR WILL MAKE ANY REPRESENTATIONS OR WARRANTIES OF ANY KIND WHATSOEVER, WHETHER ORAL OR WRITTEN, EXPRESS OR IMPLIED, WITH RESPECT TO THE PROPERTY; AND (C) THE PROPERTY IS BEING SOLD TO BUYER IN ITS PRESENT "AS IS" CONDITION SUBJECT TO THE EXPRESS REPRESENTATIONS. SUBJECT TO THE EXPRESS REPRESENTATIONS AND THE TERMS HEREOF, BUYER WILL BE AFFORDED THE OPPORTUNITY TO MAKE ANY AND ALL INSPECTIONS OF THE PROPERTY AND SUCH RELATED MATTERS AS BUYER MAY REASONABLY DESIRE AND, ACCORDINGLY, SUBJECT TO THE EXPRESS REPRESENTATIONS, BUYER WILL RELY SOLELY ON ITS OWN DUE DILIGENCE AND INVESTIGATIONS IN PURCHASING THE PROPERTY. IN CONNECTION WITH THE FOREGOING, BUYER EXPRESSLY AGREES TO WAIVE ANY AND ALL RIGHTS WHICH BUYER MAY HAVE UNDER SECTION 1542 OF THE CALIFORNIA CIVIL CODE, WHICH PROVIDES AS FOLLOWS:

> "A GENERAL RELEASE DOES NOT EXTEND TO CLAIMS WHICH THE CREDITOR DOES NOT KNOW OR SUSPECT TO EXIST IN HIS OR HER FAVOR AT THE TIME OF EXECUTING THE RELEASE, WHICH IF KNOWN BY HIM OR HER MUST HAVE MATERIALLY AFFECTED HIS OR HER SETTLEMENT WITH THE DEBTOR."

12. RISK OF LOSS.

12.1 Condemnation. If, prior to any Closing, all or any portion of the Property is taken by condemnation or eminent domain (or is the subject of a pending or contemplated taking which has not been consummated), Seller shall immediately notify Buyer in writing of such fact. In such event, Buyer shall have the option to terminate this Agreement upon written notice to Seller given within ten (10) Business Days after receipt of such notice from Seller, in which event the Deposit shall be returned to Buyer. Notwithstanding the foregoing, Buyer's failure to provide written notice of Buyer's election to terminate within such ten (10) Business Day period shall be deemed Buyer's election to terminate this Agreement. Prior to any termination or deemed termination of

this Agreement, Buyer shall have the right to participate in any proceedings and negotiations with respect to the taking and any transfer in lieu of taking (and Seller shall not consummate any transfer in lieu of taking without Buyer's prior written consent, which consent shall not be unreasonably withheld, conditioned or delayed). If Buyer waives the right to terminate this Agreement and elects to proceed with the Closing, then (a) Seller, at, and as a condition precedent to Buyer's obligation to proceed with, the Closing, must: (i) pay to Buyer (or direct Escrow Agent to credit Buyer against the Purchase Price for) the amount of all awards for the taking (and any consideration for any transfer in lieu of taking) actually received by Seller; and (ii) assign to Buyer by written instrument reasonably satisfactory to Buyer all rights or claims to any future awards for the taking (and any consideration for any transfer in lieu of taking); and (b) the Parties shall proceed to the Closing pursuant to the terms hereof without further modification of the terms of this Agreement.

12.2 Casualty. Prior to the Closing and notwithstanding the pendency of this Agreement, the entire risk of loss or damage by earthquake, hurricane, tornado, flood, landslide, fire, sinkhole, contamination by hazardous materials or other casualty shall be borne and assumed by Seller. If, prior to the Closing, any portion of the Property is damaged as a result of any earthquake, hurricane, tornado, flood, sinkhole, landslide, fire, contamination by hazardous materials or other casualty, Seller shall immediately notify Buyer in writing of such fact. In such event, Buyer shall have the option to terminate this Agreement upon written notice to Seller given within ten (10) Business Days after receipt of any such notice from Seller, in which event the Deposit shall be returned to Buyer. Notwithstanding the foregoing, Buyer's failure to provide written notice of Buyer's election to terminate within such ten (10) Business Day period shall be deemed Buyer's election to terminate this Agreement. Prior to any termination or deemed termination of this Agreement, Buyer shall have the right to participate in any adjustment of the insurance claim. If Buyer waives the right to terminate this Agreement and elects to proceed with the Closing, then (a) Seller, at, and as a condition precedent to Buyer's obligation to proceed with, the Closing, must either: (i) pay to Buyer (or direct Escrow Agent to credit Buyer against the Purchase Price for) the amount of any insurance proceeds actually received by Seller plus the amount of any deductible under Seller's insurance; or (ii) if no insurance proceeds have been received by Seller, assign to Buyer by written instrument reasonably satisfactory to Buyer all rights or claims to the insurance proceeds and credit Buyer against the Purchase Price for any deductible payable under Seller's insurance policy; and (b) the Parties shall proceed to the Closing pursuant to the terms hereof without further modification of the terms of this Agreement.

13. REMEDIES.

13.1 Default by Seller. If Seller shall breach any of the terms or provisions of this Agreement or otherwise fail to perform any of Seller's obligations under this Agreement at or prior to Closing, and if such failure continues without cure by Seller for five (5) Business Days after Buyer provides Seller and Escrow Agent with written notice thereof (a "Seller Default"), and provided Buyer is not then in default, then Buyer may, as Buyer's sole remedies for such failure, but without limiting Buyer's right to recover attorneys' fees pursuant to Section 15.13 below: (a) waive the effect of such matter and proceed to consummate this transaction; (b) cancel this Agreement and receive a full refund of the Deposit and recover from Seller the reasonable out-of-pocket expenses incurred by Buyer related to the Property and this transaction, which amounts shall be payable by Seller to Buyer within five (5) Business Days following receipt by Seller of

written request therefor from Buyer together with copies of invoices evidencing such expenses; or (c) proceed with any remedies available to Buyer at law or in equity, which may, without limitation, include the bringing of an action against Seller for specific performance and/or recovery of the Deposit and any other damages suffered or incurred by Buyer as a result of any breach or failure by Seller to perform any of Seller's obligations under this Agreement.

13.2 Default by Buyer. IF BUYER SHALL BREACH ANY OF THE TERMS OR PROVISIONS OF THIS AGREEMENT OR OTHERWISE FAIL TO PERFORM ANY OF BUYER'S OBLIGATIONS UNDER THIS AGREEMENT AND IF SUCH FAILURE CONTINUES WITHOUT CURE BY BUYER FOR FIVE (5) BUSINESS DAYS AFTER SELLER PROVIDES BUYER AND ESCROW AGENT WITH WRITTEN NOTICE THEREOF, AND PROVIDED SELLER IS NOT THEN IN DEFAULT, THEN SELLER MAY WAIVE SUCH BREACH AND PROCEED TO CONSUMMATE THIS TRANSACTION IN ACCORDANCE WITH THE TERMS HEREOF, OR SELLER MAY, AS ITS EXCLUSIVE REMEDY (BUT WITHOUT LIMITING SELLER'S RIGHT TO RECOVER ATTORNEYS' FEES PURSUANT TO SECTION 14.13 BELOW), CANCEL THIS AGREEMENT AND RETAIN THE DEPOSIT AS LIQUIDATED DAMAGES AND AS CONSIDERATION FOR THE ACCEPTANCE OF THIS AGREEMENT AND FOR TAKING THE PROPERTY OFF THE MARKET, AND NOT AS A PENALTY. BUYER AND SELLER HAVE DETERMINED AND HEREBY AGREE THAT IT WOULD BE IMPRACTICAL OR EXTREMELY DIFFICULT, IF NOT IMPOSSIBLE, TO ASCERTAIN WITH ANY DEGREE OF CERTAINTY THE AMOUNT OF DAMAGES THAT WOULD BE SUFFERED BY SELLER IF BUYER FAILS TO PERFORM ANY OF ITS OBLIGATIONS IN ACCORDANCE WITH THE PROVISIONS OF THIS AGREEMENT, AND THE PARTIES AGREE THAT A REASONABLE ESTIMATE OF SUCH DAMAGES UNDER THE CIRCUMSTANCES IS AN AMOUNT EQUAL TO THE DEPOSIT. ACCORDINGLY, BUYER AND SELLER AGREE THAT IF BUYER BREACHES ANY OF ITS OBLIGATIONS UNDER THIS AGREEMENT OR OTHERWISE DEFAULTS HEREUNDER, SELLER MAY RETAIN THE DEPOSIT AS LIQUIDATED DAMAGES. THE PAYMENT AND RETENTION OF THE DEPOSIT AS LIQUIDATED DAMAGES IS NOT INTENDED AS A FORFEITURE OR PENALTY WITHIN THE MEANING OF CALIFORNIA CIVIL CODE SECTIONS 3275 OR 3369, BUT IS INTENDED TO CONSTITUTE LIQUIDATED DAMAGES TO SELLER PURSUANT TO CALIFORNIA CIVIL CODE SECTIONS 1671, 1676 AND 1677.

Seller's Initials _____ Buyer's Initials _____

14. BROKERS.

Neither Party has been represented in this transaction by a broker. Each of Buyer and Seller hereby represents and warrants to and agrees with each other that it has not had, and shall not have, any dealings with any third Party to whom the payment of any broker's fee, finder's fee, commission, or other similar compensation ("Commission") shall or may become due or payable in connection with the transaction contemplated hereby. Seller shall indemnify, defend, protect, and hold Buyer harmless for, from, and against any and all Claims incurred by Buyer by reason of any breach or inaccuracy of the representation, warranty, and agreement of Seller contained in this

Section. Buyer shall indemnify, defend, protect, and hold Seller harmless from and against any and all Claims incurred by Seller by reason of any breach or inaccuracy of the representation, warranty, and agreement of Buyer contained in this Section. The provisions of this Section shall survive the Closing or earlier termination of this Agreement.

15. MISCELLANEOUS PROVISIONS.

15.1 Entire Agreement. This Agreement, including the exhibits attached hereto, constitutes the entire agreement between Buyer and Seller pertaining to the subject matter hereof and supersedes all prior agreements, understandings, letters of intent, term sheets, negotiations, and discussions, whether oral or written, of the Parties, and there are no warranties, representations, or other agreements, express or implied, made to either Party by the other Party in connection with the subject matter hereof except as specifically set forth herein or in the documents delivered pursuant hereto or in connection herewith.

15.2 Modification; Waiver. No supplement, modification, waiver, or termination of this Agreement shall be binding unless executed in writing by the Party to be bound thereby. No waiver of any provision of this Agreement shall be deemed or shall constitute a waiver of any other provision hereof (whether or not similar), nor shall such waiver constitute a continuing waiver unless otherwise expressly provided.

15.3 Notices. All notices, consents, requests, reports, demands or other communications hereunder (collectively, "Notices") shall be in writing and may be given personally, by registered or certified mail, by electronic mail, by courier, or by Federal Express (or other reputable overnight delivery service) for overnight delivery, as follows:

To Buyer:
Sartin Properties, LLC
35562 Yucaipa Blvd., Unit 4-141
Yucaipa, CA 92399
Attention: Kevin Sartin, Owner
Telephone: 909-800-2695
Email: kevin@sartinfarms.com

To Seller:
City of Redlands
P.O. Box 3005
Redlands, California 92373
Attention: City Clerk
Telephone: (909) 798-7531
Email: jdonaldson@cityofredlands.org

To Escrow Agent:
First American Title Company
3281 E. Guasti Rd., Suite 400
Ontario, CA 91761
Attention: Kelly Simoneau
Telephone: (909) 510-6206

Email: Ksimoneau@firstam.com

or to such other address or such other person as the addressee Party shall have last designated by Notice to the other Party and Escrow Agent. All Notices shall be deemed to have been given three (3) days following deposit in the United States Postal Service (postage prepaid) or, upon receipt, if sent by overnight delivery service, courier, facsimile transmission (so long as confirmed by the appropriate automatic confirmation page), electronic mail (so long as receipt is acknowledged or otherwise confirmed), or personally delivered. Notice to a Party shall not be effective unless and until each required copy of such Notice is given. The inability to deliver a Notice because of a changed address of which no Notice was given or an inoperative facsimile number for which no Notice was given of a substitute number, or any rejection or other refusal to accept any Notice, shall be deemed to be the receipt of the Notice as of the date of such inability to deliver or rejection or refusal to accept. Any Notice to be given by any Party hereto may be given by legal counsel for such Party. Telephone numbers are provided herein for convenience only and shall not alter the manner of giving Notice set forth in this Section 15.3.

15.4 Expenses. Subject to the provision for payment of the Closing Costs in accordance with the terms of Section 7.6 of this Agreement and of any other provision of this Agreement, whether or not the transaction contemplated by this Agreement shall be consummated, all fees and expenses incurred by any Party hereto in connection with this Agreement shall be borne by such Party.

15.5 Severability. Any provision or part of this Agreement that is invalid or unenforceable in any situation in any jurisdiction shall, as to such situation and such jurisdiction, be ineffective only to the extent of such invalidity and shall not affect the enforceability of the remaining provisions hereof or the validity or enforceability of any such provision in any other situation or in any other jurisdiction.

15.6 Successors and Assigns. Neither Seller nor Buyer shall assign its rights under this Agreement without the consent of the other Party, which consent shall not be unreasonably withheld or delayed. Notwithstanding the foregoing, either Party shall have the right, without the consent of the other, to assign its rights under this Agreement to an affiliate entity directly or indirectly controlling, controlled by or under common control with the assigning Party or an entity in which such assigning Party or such an affiliate directly or indirectly owns a financial and voting interest and directly or indirectly is responsible for day to day management of the entity provided such assignee assumes such Party's obligations hereunder pursuant to a written agreement, a copy of which shall be provided to the other Party by the assigning Party. Notwithstanding any such assignment, no assignment shall relieve the assignor of any obligations or liability under this Agreement. Subject to the foregoing, all of the Parties' rights, duties, benefits, liabilities, and obligations under this Agreement shall inure to the benefit of, and be binding upon, their respective successors and assigns.

15.7 Counterparts. This Agreement may be executed in as many counterparts as may be deemed necessary and convenient, and by the different Parties hereto on separate counterparts, each of which, when so executed, including, without limitation, by .pdf scanned counterparts of any initialed or executed pages delivered via electronic mail, shall be deemed an original, but all such counterparts shall constitute one and the same instrument.

15.8 Governing Law; Jurisdiction. This Agreement shall be governed by and construed under the laws of the State of California without regard to conflicts-of-laws principles that would require the application of any other law. Each Party hereby consents to the exclusive jurisdiction of any court of competent jurisdiction in San Bernardino County in any action related to or arising under this Agreement.

15.9 Headings. The Section headings of this Agreement are for convenience of reference only and shall not be deemed to modify, explain, restrict, alter, or affect the meaning or interpretation of any provision hereof.

15.10 Time of Essence. Time shall be of the essence with respect to all matters contemplated by this Agreement.

15.11 Further Assurances. In addition to the actions recited herein and contemplated to be performed, executed, and/or delivered by Seller and Buyer, during the term of this Agreement and after the Closing, Seller and Buyer agree to perform, execute, and/or deliver or cause to be performed, executed, and/or delivered any and all such further acts, instruments, deeds, and assurances as may be reasonably required to consummate the transaction contemplated hereby. In furtherance of the foregoing, so long as Buyer is not in default under the terms of this Agreement, Seller will cooperate, as reasonably needed, and at no cost to Seller, in Buyer's feasibility review process, which shall include but not be limited to Seller's consent to Buyer's unrestricted access to agencies, representatives, tenants, consultants and other parties familiar with the Property and the execution and delivery of such applications or other documents as reasonably requested by Buyer.

15.12 Construction. As used in this Agreement, the masculine, feminine, and neuter gender and the singular or plural shall each be construed to include the other whenever the context so requires. This Agreement shall be construed as a whole and in accordance with its fair meaning, without regard to any presumption or rule of construction causing this Agreement or any part of it to be construed against the Party causing the Agreement to be written. The Parties acknowledge that each has had a full and fair opportunity to review the Agreement and to have it reviewed by counsel. If any words or phrases in this Agreement have been stricken, whether or not replaced by other words or phrases, this Agreement shall be construed (if otherwise clear and unambiguous) as if the stricken matter never appeared and no inference shall be drawn from the former presence of the stricken matters in this Agreement or from the fact that such matters were stricken.

15.13 Attorneys' Fees. In the event that either Party hereto brings an action or proceeding against the other Party to enforce or interpret any of the covenants, conditions, agreements, or provisions of this Agreement, the prevailing Party in such action or proceeding shall be awarded all costs and expenses of such action or proceeding, including, without limitation, attorneys' fees (including fees for a Party's use of in-house counsel), charges, disbursements, and the fees and costs of expert witnesses. If any Party secures a judgment in any such action or proceeding, then any costs and expenses (including, but not limited to, attorneys' fees and costs) incurred by the prevailing Party in enforcing such judgment, or any costs and expenses (including, but not limited to, attorneys' fees and costs) incurred by the prevailing Party in any appeal from such judgment in connection with such appeal shall be recoverable separately from and in addition to any other amount included in such judgment. The preceding sentence is intended to be severable from the

other provisions of this Agreement, and shall survive and not be merged into any such judgment. This Section shall survive Closing and any earlier termination of this Agreement.

15.14 Business Days. As used herein, the term "Business Day" shall mean a day that is not a Saturday, Sunday, or legal holiday. In the event that the date for the performance of any covenant or obligation under this Agreement shall fall on a Saturday, Sunday, or legal holiday, the date for performance thereof shall be extended to the next Business Day. Similarly, in the event that the day for the performance of any covenant or obligation under this Agreement involving Escrow Agent shall fall on a Business Day on which Escrow Agent is closed for business to the public, the date for performance thereof shall be extended to the next Business Day on which Escrow Agent is open for business to the public.

Signatures on following page

IN WITNESS WHEREOF, the Parties have executed this Agreement as of the day and year first above written.

SELLER:

CITY OF REDLANDS, a municipal corporation

By:_____
Mario Saucedo, Mayor

ATTEST:

_____
Jeanne Donaldson, City Clerk

BUYER:

SARTIN PROPERTIES, LLC, a California limited liability company

By:_____
Kevin Sartan, Owner

ESCROW AGENT:

The undersigned Escrow Agent hereby accepts the foregoing Purchase and Sale Agreement and Joint Escrow Instructions, agrees to act as Escrow Agent under this Agreement in strict accordance with its terms, agrees to insert as the "Agreement Date" on page 1 hereof, if not otherwise dated, the latest date this Agreement was signed by Seller and Buyer and delivered to Escrow Agent, and agrees to comply with the applicable provisions of the Internal Revenue Code with respect to the transactions contemplated hereby.

First American Title Company

Date:_____

By:_____
Name: Kelly Simoneau
Title: Senior Commercial Escrow Officer

LIST OF EXHIBITS

EXHIBIT "A" LEGAL DESCRIPTION

EXHIBIT "B" GRANT DEED

EXHIBIT "C" NON-FOREIGN AFFIDAVIT

EXHIBIT "A"

Legal Description

APN: 0168-343-01-0000

STRETCH MAP OF MENTONE PTN LOT 1 AND PTN W 301 FT LOT 3 LYING S OF MILL CREEK ROAD

EXHIBIT "B"

GRANT DEED

RECORDING REQUESTED BY
AND WHEN RECORDED MAIL TO:

City of Redlands
35 Cajon Street, Suite 4
P.O. Box 3005 mailing
Redlands, California 92373
Attention: Jeanne Donaldson, City Clerk

EXEMPT FROM RECORDING FEES PURSUANT
TO GOVERNMENT CODE SECTION 27383

(Space Above for Recorder's Use)

APN: 0168-343-01-0000

EXEMPT FROM RECORDING FEES PER GOVT. CODE §27383

GRANT DEED

The undersigned Grantor declares that Documentary Transfer Tax is not shown pursuant to Section 11932 of the California Revenue and Taxation Code, as amended.

FOR GOOD AND VALUABLE CONSIDERATION, the receipt and sufficiency of which is hereby acknowledged, CITY OF REDLANDS, a municipal corporation (the "Grantor"), hereby grants to SARTIN PROPERTIES, LLC, a California limited liability company, the real property in the City of Redlands, County of San Bernardino, State of California, described in Exhibit "A" attached hereto and incorporated herein by this reference.

THIS GRANT AND CONVEYANCE IS MADE AND ACCEPTED SUBJECT TO COVENANTS, CONDITIONS, RESTRICTIONS, RESERVATIONS, RIGHTS OF WAY AND EASEMENTS NOW OF RECORD.

[signature page follows]

MAIL TAX STATEMENTS TO:
City of Redlands
P.O. Box 3005
Redlands, California 92373
Attention: City Clerk

IN WITNESS WHEREOF, the Grantor has executed this grant deed as of _____, 2026.

GRANTOR:

CITY OF REDLANDS, a municipal corporation

By:_____
Mario Saucedo, Mayor

ATTEST:

_____
Jeanne Donaldson, City Clerk

A notary public or other officer completing this certificate verified only the identity of the individual who signed the document to which this certificate is attached, and not the truthfulness, accuracy, or validity of that document.

STATE OF CALIFORNIA)
) ss.
COUNTY OF _____)

On _____, 20____, before me, _____
_____, Notary Public, personally appeared _____
_____, who proved to me on the basis of satisfactory evidence to be the person(s) whose name(s) is/are subscribed to the within instrument and acknowledged to me that he/she/they/executed the same in his/her/their authorized capacity(ies) and that by his/her/their signature(s) on the instrument the person(s), or the entity upon behalf of which the person(s) acted, executed the instrument.

I certify under PENALTY OF PERJURY under the laws of the State of California that the foregoing paragraph is true and correct.

WITNESS my hand and official seal.

_____
Notary Public
In and For Said County and State

EXHIBIT "A"

LEGAL DESCRIPTION

APN: 0168-343-01-0000

STRETCH MAP OF MENTONE PTN LOT 1 AND PTN W 301 FT LOT 3 LYING S OF MILL CREEK ROAD

Document No. _____

Recorded _____, 20___

STATEMENT OF TAX DUE AND REQUEST THAT TAX DECLARATION NOT BE MADE A PART OF THE PERMANENT RECORD IN THE OFFICE OF THE COUNTY RECORDER (PURSUANT TO SECTION 11932 REVENUE AND TAXATION CODE)

TO: Recorder
County of San Bernardino

Request is hereby made in accordance with the provisions of the Documentary Transfer Tax Act that the amount of the tax due not be shown on the original document which names:

Grantor: CITY OF REDLANDS, a municipal corporation

Grantee: SARTIN PROPERTIES, LLC, a California limited liability company

The property described in the accompanying document is located in the City of Redlands, County of San Bernardino.

The amount of tax due on the accompanying document is $_____, computed on the full value of the property conveyed.

(Signature of Grantor or Agent)

CITY OF REDLANDS, a municipal corporation

By:_____
Mario Saucedo, Mayor

ATTEST:

_____
Jeanne Donaldson, City Clerk

Note: After the permanent record is made, this form will be affixed to the conveying document and returned with it.

EXHIBIT "C"

NON-FOREIGN AFFIDAVIT

STATE OF _____)
) ss.
County of _____)

The undersigned, as authorized agent of CITY OF REDLANDS, a municipal corporation ("Transferor"), after being duly sworn upon his oath deposes and says that:

Section 1445 of the Internal Revenue Code provides that a transferee of a U.S. real property interest must withhold tax if the transferor is a foreign person. To inform SARTIN PROPERTIES, LLC, a California limited liability company ("Transferee"), that withholding of tax is not required upon the disposition of Transferor's interest in a U.S. real property interest, the undersigned hereby certifies the following:

1. Transferor is not a non-resident alien, foreign corporation, foreign partnership, foreign trust, foreign estate, or other foreign person within the meaning of §1445 and §7701 of the Internal Revenue Code and the treasury regulations promulgated thereunder;

2. Transferor is not a disregarded entity as defined in Treas. Reg. § 1.1445-2(b)(2)(iii);

3. Transferor's U.S. taxpayer identification number is: _____;

4. Transferor's business address is: _____
_____.

Transferor understands that this certification may be disclosed to the Internal Revenue Service by Transferee and that any false statement contained herein could be punished by fine, imprisonment, or both.

Under penalties of perjury Transferor declares that it has examined this certification and to the best of its knowledge and belief this certification is true, correct, and complete. The undersigned agent declares that he has the authority to sign this document on behalf of Transferor.

TRANSFEROR:

CITY OF REDLANDS, a municipal corporation

By:_____
Mario Saucedo, Mayor

ATTEST:

_____
Jeanne Donaldson, City Clerk

A notary public or other officer completing this certificate verified only the identity of the individual who signed the document to which this certificate is attached, and not the truthfulness, accuracy, or validity of that document.

STATE OF CALIFORNIA)
) ss.
COUNTY OF _____)

On _____, 20___, before me, _____
_____, Notary Public, personally appeared _____
_____, who proved to me on the basis of satisfactory evidence to be the person(s) whose name(s) is/are subscribed to the within instrument and acknowledged to me that he/she/they/executed the same in his/her/their authorized capacity(ies) and that by his/her/their signature(s) on the instrument the person(s), or the entity upon behalf of which the person(s) acted, executed the instrument.

I certify under PENALTY OF PERJURY under the laws of the State of California that the foregoing paragraph is true and correct.

WITNESS my hand and official seal.

_____
Notary Public
In and For Said County and State

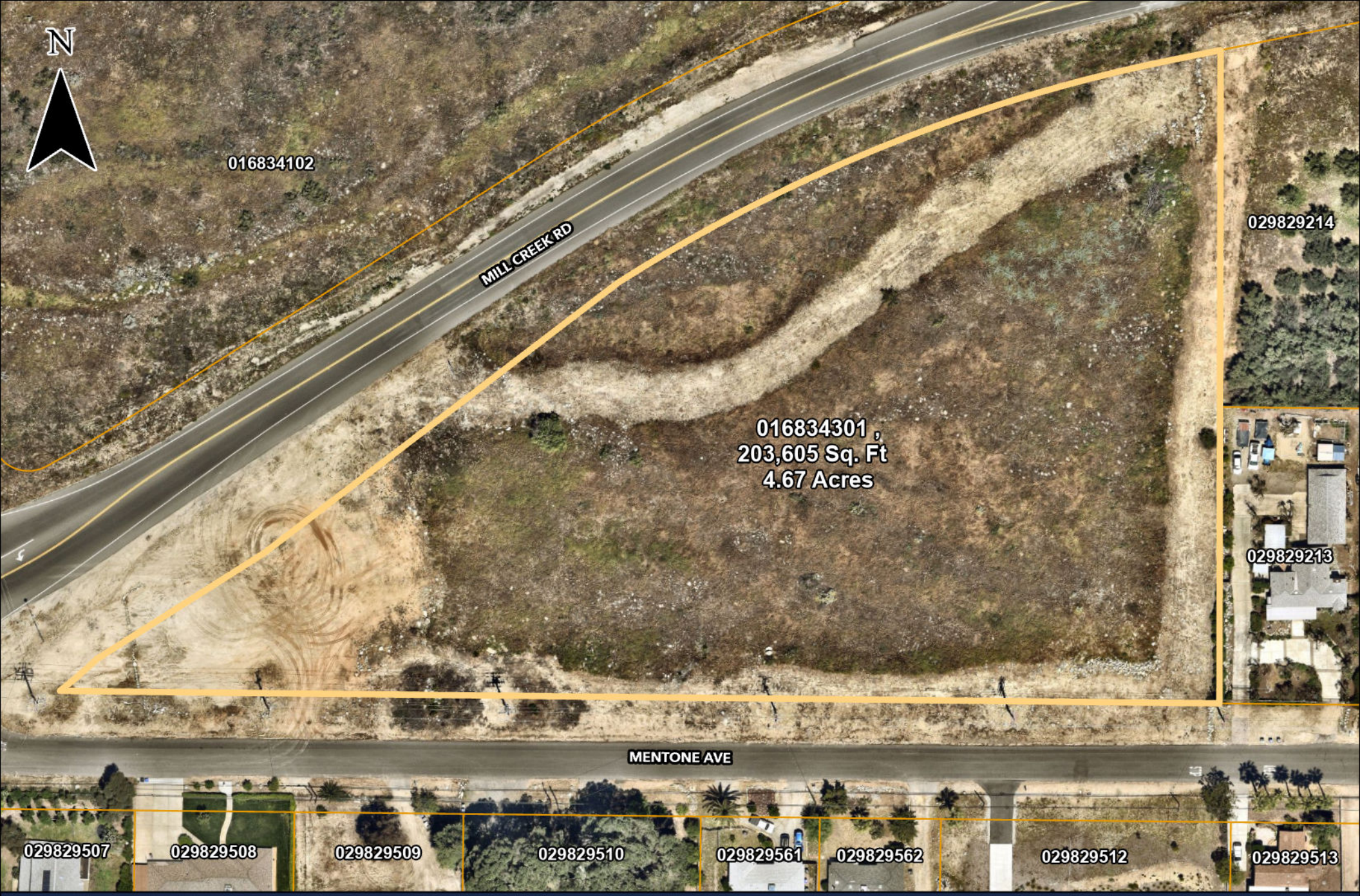

APN 0168-343-01

2300-2306 Mentone Ave.

Parcel boundaries

0 80 160

Feet

City of Redlands
Author: Redlands GIS
Date: 6/10/25

City Council Meeting **K. 1.**

DATE: 03/03/2026

TO: Honorable Mayor and City Council Members

SUBJECT: Individual Council Member Report on Activities for February 2026 from Mayor Pro Tem Shaw (City Clerk Donaldson)

DISCUSSION:

Mayor Pro Tem Shaw has requested to include this report on the agenda for recording purposes. The report does not require City Council approval.

Attachments

February 2026 Council Activities -Shaw

February 2026 Council Activities

Mayor Pro Tem Marc Shaw

- Participated in Redlands Unified School District's Civics Day
- Attended Redlands Chamber Rise and Shine event
- Met with representatives from Teamsters 1932
- Attended the Boys and Girls Club annual gala
- Participated in the Compact Club Dinner mixer
- Attended the Watchorn Lincoln Memorial dinner
- Participated in the groundbreaking ceremony for the new City Hall
- Met with Jacob Green and Associates to work on City Manager goal setting and performance review process
- Attended Citrus Preservation Commission meeting